Spartan-3 FPGA Family Data Sheet

DS099 June 27, 2013 **Product Specification**

Module 1: Introduction and Ordering Information

DS099 (v3.1) June 27, 2013

- Introduction
- Features
- Architectural Overview
- Array Sizes and Resources
- User I/O Chart
- Ordering Information

Module 2: Functional Description

DS099 (v3.1) June 27, 2013

- Input/Output Blocks (IOBs)
  - IOB Overview
  - SelectIO™ Interface I/O Standards
- Configurable Logic Blocks (CLBs)
- Block RAM
- Dedicated Multipliers
- Digital Clock Manager (DCM)
- Clock Network
- Configuration

Module 3: DC and Switching Characteristics

DS099 (v3.1) June 27, 2013

- DC Electrical Characteristics
  - Absolute Maximum Ratings
  - Supply Voltage Specifications
  - Recommended Operating Conditions
  - DC Characteristics
- Switching Characteristics
  - I/O Timing
  - Internal Logic Timing
  - DCM Timing
  - Configuration and JTAG Timing

Module 4: Pinout Descriptions

DS099 (v3.1) June 27, 2013

- Pin Descriptions
  - Pin Behavior During Configuration
- Package Overview
- Pinout Tables
  - Footprints

© Copyright 2003–2013 Xilinx, Inc. XILINX, the Xilinx logo, Virtex, Spartan, ISE, Artix, Kintex, Zynq, Vivado, and other designated brands included herein are trademarks of Xilinx in the United States and other countries. PCI and PCI-X are trademarks of PCI-SIG and used under license. All other trademarks are the property of their respective owners.

Spartan-3 FPGA Family: Introduction and Ordering Information

DS099 (v3.1) June 27, 2013 **Product Specification**

Introduction

The Spartan®-3 family of Field-Programmable Gate Arrays is specifically designed to meet the needs of high volume, cost-sensitive consumer electronic applications. The eight-member family offers densities ranging from 50,000 to 5,000,000 system gates, as shown in Table 1.

The Spartan-3 family builds on the success of the earlier Spartan-IIE family by increasing the amount of logic resources, the capacity of internal RAM, the total number of I/Os, and the overall level of performance as well as by improving clock management functions. Numerous enhancements derive from the Virtex®-II platform technology. These Spartan-3 FPGA enhancements, combined with advanced process technology, deliver more functionality and bandwidth per dollar than was previously possible, setting new standards in the programmable logic industry.

Because of their exceptionally low cost, Spartan-3 FPGAs are ideally suited to a wide range of consumer electronics applications, including broadband access, home networking, display/projection and digital television equipment.

The Spartan-3 family is a superior alternative to mask programmed ASICs. FPGAs avoid the high initial cost, the lengthy development cycles, and the inherent inflexibility of conventional ASICs. Also, FPGA programmability permits design upgrades in the field with no hardware replacement necessary, an impossibility with ASICs.

Features

- Low-cost, high-performance logic solution for high-volume, consumer-oriented applications
  - Densities up to 74,880 logic cells
- SelectIO™ interface signaling
  - Up to 633 I/O pins
  - 622+ Mb/s data transfer rate per I/O
  - 18 single-ended signal standards
  - 8 differential I/O standards including LVDS, RSDS
  - Termination by Digitally Controlled Impedance
  - Signal swing ranging from 1.14V to 3.465V
  - Double Data Rate (DDR) support
  - DDR, DDR2 SDRAM support up to 333 Mb/s
- Logic resources
  - Abundant logic cells with shift register capability
  - Wide, fast multiplexers
  - Fast look-ahead carry logic
  - Dedicated 18 x 18 multipliers
  - JTAG logic compatible with IEEE 1149.1/1532
- SelectRAM™ hierarchical memory
  - Up to 1,872 Kbits of total block RAM
  - Up to 520 Kbits of total distributed RAM
- Digital Clock Manager (up to four DCMs)
  - Clock skew elimination
  - Frequency synthesis
  - High resolution phase shifting
- Eight global clock lines and abundant routing
- Fully supported by Xilinx ISE® and WebPACK™ software development systems
- MicroBlaze™ and PicoBlaze™ processor, PCI®, PCI Express® PIPE Endpoint, and other IP cores
- Pb-free packaging options
- Automotive Spartan-3 XA Family variant

Table 1: **Summary of Spartan-3 FPGA Attributes**

Device	System Gates	Equivalent Logic Cells[1]	CLB Array (One CLB = Four Slices)			Distributed RAM Bits (K=1024)	Block RAM Bits (K=1024)	Dedicated Multipliers	DCMs	Max. User I/O	Maximum Differential I/O Pairs
			Rows	Columns	Total CLBs						
XC3S50[2]	50K	1,728	16	12	192	12K	72K	4	2	124	56
XC3S200[2]	200K	4,320	24	20	480	30K	216K	12	4	173	76
XC3S400[2]	400K	8,064	32	28	896	56K	288K	16	4	264	116
XC3S1000[2]	1M	17,280	48	40	1,920	120K	432K	24	4	391	175
XC3S1500	1.5M	29,952	64	52	3,328	208K	576K	32	4	487	221
XC3S2000	2M	46,080	80	64	5,120	320K	720K	40	4	565	270
XC3S4000	4M	62,208	96	72	6,912	432K	1,728K	96	4	633	300
XC3S5000	5M	74,880	104	80	8,320	520K	1,872K	104	4	633	300

Notes:

1. Logic Cell = 4-input Look-Up Table (LUT) plus a 'D' flip-flop. "Equivalent Logic Cells" equals "Total CLBs" x 8 Logic Cells/CLB x 1.125 effectiveness.
2. These devices are available in Xilinx Automotive versions as described in DS314: *Spartan-3 Automotive XA FPGA Family.*

© Copyright 2003–2013 Xilinx, Inc. XILINX, the Xilinx logo, Virtex, Spartan, ISE, Artix, Kintex, Zynq, Vivado, and other designated brands included herein are trademarks of Xilinx in the United States and other countries. PCI and PCI-X are trademarks of PCI-SIG and used under license. All other trademarks are the property of their respective owners.

Architectural Overview

The Spartan-3 family architecture consists of five fundamental programmable functional elements:

- Configurable Logic Blocks (CLBs) contain RAM-based Look-Up Tables (LUTs) to implement logic and storage elements that can be used as flip-flops or latches. CLBs can be programmed to perform a wide variety of logical functions as well as to store data.
- Input/Output Blocks (IOBs) control the flow of data between the I/O pins and the internal logic of the device. Each IOB supports bidirectional data flow plus 3-state operation. Twenty-six different signal standards, including eight high-performance differential standards, are available as shown in Table 2. Double Data-Rate (DDR) registers are included. The Digitally Controlled Impedance (DCI) feature provides automatic on-chip terminations, simplifying board designs.
- Block RAM provides data storage in the form of 18-Kbit dual-port blocks.
- Multiplier blocks accept two 18-bit binary numbers as inputs and calculate the product.
- Digital Clock Manager (DCM) blocks provide self-calibrating, fully digital solutions for distributing, delaying, multiplying, dividing, and phase shifting clock signals.

These elements are organized as shown in Figure 1. A ring of IOBs surrounds a regular array of CLBs. The XC3S50 has a single column of block RAM embedded in the array. Those devices ranging from the XC3S200 to the XC3S2000 have two columns of block RAM. The XC3S4000 and XC3S5000 devices have four RAM columns. Each column is made up of several 18-Kbit RAM blocks; each block is associated with a dedicated multiplier. The DCMs are positioned at the ends of the outer block RAM columns.

The Spartan-3 family features a rich network of traces and switches that interconnect all five functional elements, transmitting signals among them. Each functional element has an associated switch matrix that permits multiple connections to the routing.

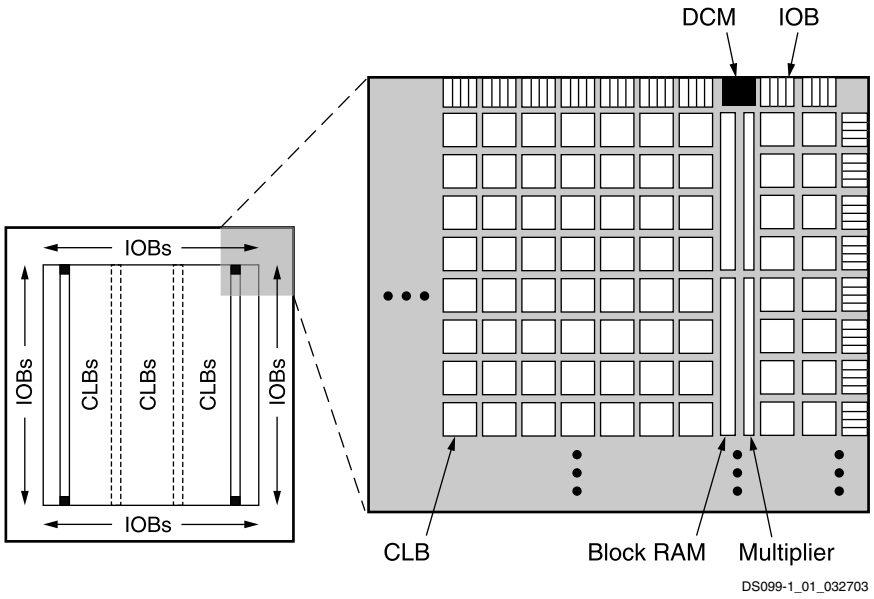

Notes:

1. The two additional block RAM columns of the XC3S4000 and XC3S5000 devices are shown with dashed lines. The XC3S50 has only the block RAM column on the far left.

Figure 1: **Spartan-3 Family Architecture**

Configuration

Spartan-3 FPGAs are programmed by loading configuration data into robust reprogrammable static CMOS configuration latches (CCLs) that collectively control all functional elements and routing resources. Before powering on the FPGA, configuration data is stored externally in a PROM or some other nonvolatile medium either on or off the board. After applying

power, the configuration data is written to the FPGA using any of five different modes: Master Parallel, Slave Parallel, Master Serial, Slave Serial, and Boundary Scan (JTAG). The Master and Slave Parallel modes use an 8-bit-wide SelectMAP port.

The recommended memory for storing the configuration data is the low-cost Xilinx Platform Flash PROM family, which includes the XCF00S PROMs for serial configuration and the higher density XCF00P PROMs for parallel or serial configuration.

I/O Capabilities

The SelectIO feature of Spartan-3 devices supports eighteen single-ended standards and eight differential standards as listed in Table 2. Many standards support the DCI feature, which uses integrated terminations to eliminate unwanted signal reflections.

Table 2: **Signal Standards Supported by the Spartan-3 Family**

Standard Category	Description	V_{CCO} (V)	Class	Symbol (IOSTANDARD)	DCI Option
Single-Ended					
GTL	Gunning Transceiver Logic	N/A	Terminated	GTL	Yes
			Plus	GTLP	Yes
HSTL	High-Speed Transceiver Logic	1.5	I	HSTL_I	Yes
			III	HSTL_III	Yes
		1.8	I	HSTL_I_18	Yes
			II	HSTL_II_18	Yes
			III	HSTL_III_18	Yes
LVCMOS	Low-Voltage CMOS	1.2	N/A	LVCMOS12	No
		1.5	N/A	LVCMOS15	Yes
		1.8	N/A	LVCMOS18	Yes
		2.5	N/A	LVCMOS25	Yes
		3.3	N/A	LVCMOS33	Yes
LVTTL	Low-Voltage Transistor-Transistor Logic	3.3	N/A	LVTTL	No
PCI	Peripheral Component Interconnect	3.0	33 MHz[1]	PCI33_3	No
SSTL	Stub Series Terminated Logic	1.8	N/A (±6.7 mA)	SSTL18_I	Yes
			N/A (±13.4 mA)	SSTL18_II	No
		2.5	I	SSTL2_I	Yes
			II	SSTL2_II	Yes
Differential					
LDT (ULVDS)	Lightning Data Transport (HyperTransport™) Logic	2.5	N/A	LDT_25	No
LVDS	Low-Voltage Differential Signaling		Standard	LVDS_25	Yes
			Bus	BLVDS_25	No
			Extended Mode	LVDSEXT_25	Yes
LVPECL	Low-Voltage Positive Emitter-Coupled Logic	2.5	N/A	LVPECL_25	No
RSDS	Reduced-Swing Differential Signaling	2.5	N/A	RSDS_25	No
HSTL	Differential High-Speed Transceiver Logic	1.8	II	DIFF_HSTL_II_18	Yes
SSTL	Differential Stub Series Terminated Logic	2.5	II	DIFF_SSTL2_II	Yes

Notes:

1. 66 MHz PCI is not supported by the Xilinx IP core although PCI66_3 is an available I/O standard.

Table 3 shows the number of user I/Os as well as the number of differential I/O pairs available for each device/package combination.

Table 3: **Spartan-3 Device I/O Chart**

Available User I/Os and Differential (Diff) I/O Pairs by Package Type																				
Package	**VQ100 VQG100**		**CP132[1] CPG132**		**TQ144 TQG144**		**PQ208 PQG208**		**FT256 FTG256**		**FG320 FGG320**		**FG456 FGG456**		**FG676 FGG676**		**FG900 FGG900**		**FG1156[1] FGG1156**	
Footprint (mm)	**16 x 16**		**8 x 8**		**22 x 22**		**30.6 x 30.6**		**17 x 17**		**19 x 19**		**23 x 23**		**27 x 27**		**31 x 31**		**35 x 35**	
Device	**User**	**Diff**	**User**	**Diff**	**User**	**Diff**	**User**	**Diff**	**User**	**Diff**	**User**	**Diff**	**User**	**Diff**	**User**	**Diff**	**User**	**Diff**	**User**	**Diff**
XC3S50	63	29	89[1]	44[1]	97	46	124	56	–	–	–	–	–	–	–	–	–	–	–	–
XC3S200	63	29	–	–	97	46	141	62	173	76	–	–	–	–	–	–	–	–	–	–
XC3S400	–	–	–	–	97	46	141	62	173	76	221	100	264	116	–	–	–	–	–	–
XC3S1000	–	–	–	–	–	–	–	–	173	76	221	100	333	149	391	175	–	–	–	–
XC3S1500	–	–	–	–	–	–	–	–	–	–	221	100	333	149	487	221	–	–	–	–
XC3S2000	–	–	–	–	–	–	–	–	–	–	–	–	333	149	489	221	565	270	–	–
XC3S4000	–	–	–	–	–	–	–	–	–	–	–	–	–	–	489	221	633	300	712[1]	312[1]
XC3S5000	–	–	–	–	–	–	–	–	–	–	–	–	–	–	489	221	633	300	784[1]	344[1]

Notes:

1. The CP132, CPG132, FG1156, and FGG1156 packages are discontinued. See http://www.xilinx.com/support/documentation/spartan-3_customer_notices.htm.
2. All device options listed in a given package column are pin-compatible.
3. User = Single-ended user I/O pins. Diff = Differential I/O pairs.

Package Marking

Figure 2 shows the top marking for Spartan-3 FPGAs in the quad-flat packages. Figure 3 shows the top marking for Spartan-3 FPGAs in BGA packages except the 132-ball chip-scale package (CP132 and CPG132). The markings for the BGA packages are nearly identical to those for the quad-flat packages, except that the marking is rotated with respect to the ball A1 indicator. Figure 4 shows the top marking for Spartan-3 FPGAs in the CP132 and CPG132 packages.

The "`5C`" and "`4I`" part combinations may be dual marked as "`5C/4I`". Devices with the dual mark can be used as either -5C or -4I devices. Devices with a single mark are only guaranteed for the marked speed grade and temperature range. Some specifications vary according to mask revision. Mask revision E devices are errata-free. All shipments since 2006 have been mask revision E.

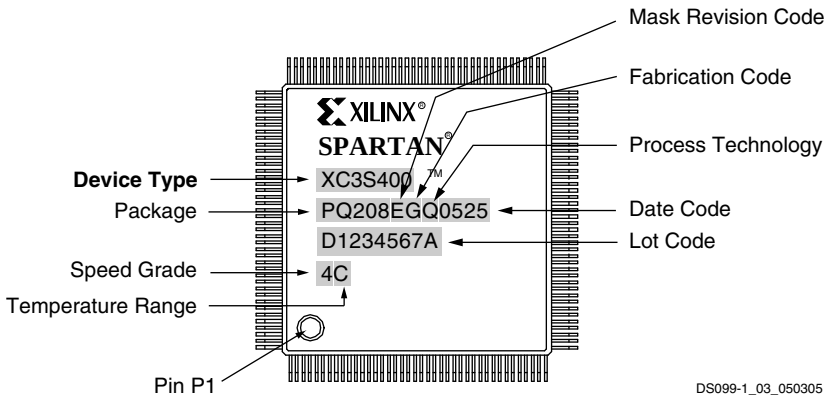

Figure 2: **Spartan-3 FPGA QFP Package Marking Example for Part Number XC3S400-4PQ208C**

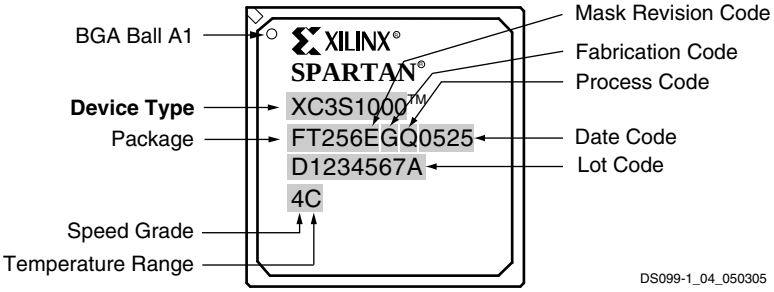

Figure 3: **Spartan-3 FPGA BGA Package Marking Example for Part Number XC3S1000-4FT256C**

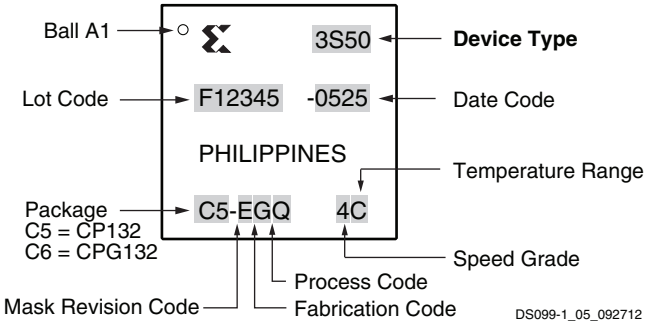

Figure 4: **Spartan-3 FPGA CP132 and CPG132 Package Marking Example for XC3S50-4CP132C**

Ordering Information

Spartan-3 FPGAs are available in both standard (Figure 5) and Pb-free (Figure 6) packaging options for all device/package combinations. The Pb-free packages include a special 'G' character in the ordering code.

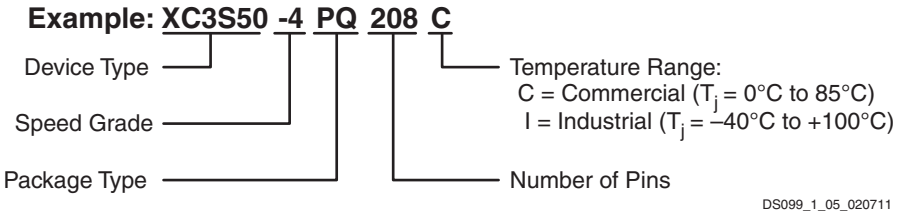

Figure 5: **Standard Packaging**

For additional information on Pb-free packaging, see XAPP427: *Implementation and Solder Reflow Guidelines for Pb-Free Packages*.

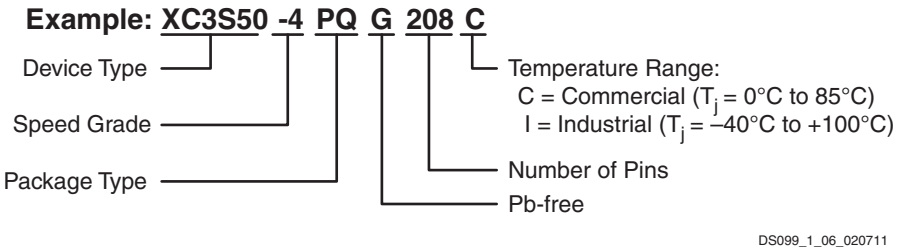

Figure 6: **Pb-Free Packaging**

Table 4: **Example Ordering Information**

Device	Speed Grade		Package Type/Number of Pins		Temperature Range (T_j)	
XC3S50	-4	Standard Performance	VQ(G)100	100-pin Very Thin Quad Flat Pack (VQFP)	C	Commercial (0°C to 85°C)
XC3S200	-5	High Performance[1]	CP(G)132[2]	132-pin Chip-Scale Package (CSP)	I	Industrial (–40°C to 100°C)
XC3S400			TQ(G)144	144-pin Thin Quad Flat Pack (TQFP)		
XC3S1000			PQ(G)208	208-pin Plastic Quad Flat Pack (PQFP)		
XC3S1500			FT(G)256	256-ball Fine-Pitch Thin Ball Grid Array (FTBGA)		
XC3S2000			FG(G)320	320-ball Fine-Pitch Ball Grid Array (FBGA)		
XC3S4000			FG(G)456	456-ball Fine-Pitch Ball Grid Array (FBGA)		
XC3S5000			FG(G)676	676-ball Fine-Pitch Ball Grid Array (FBGA)		
			FG(G)900	900-ball Fine-Pitch Ball Grid Array (FBGA)		
			FG(G)1156[2]	1156-ball Fine-Pitch Ball Grid Array (FBGA)		

Notes:

1. The -5 speed grade is exclusively available in the Commercial temperature range.
2. The CP132, CPG132, FG1156, and FGG1156 packages are discontinued. See http://www.xilinx.com/support/documentation/spartan-3_customer_notices.htm.

Revision History

Date	Version	Description
04/11/2003	1.0	Initial Xilinx release.
04/24/2003	1.1	Updated block RAM, DCM, and multiplier counts for the XC3S50.
12/24/2003	1.2	Added the FG320 package.
07/13/2004	1.3	Added information on Pb-free packaging options.
01/17/2005	1.4	Referenced Spartan-3 XA Automotive FPGA families in Table 1. Added XC3S50CP132, XC3S2000FG456, XC3S4000FG676 options to Table 3. Updated Package Marking to show mask revision code, fabrication facility code, and process technology code.
08/19/2005	1.5	Added package markings for BGA packages (Figure 3) and CP132/CPG132 packages (Figure 4). Added differential (complementary single-ended) HSTL and SSTL I/O standards.
04/03/2006	2.0	Increased number of supported single-ended and differential I/O standards.
04/26/2006	2.1	Updated document links.
05/25/2007	2.2	Updated Package Marking to allow for dual-marking.
11/30/2007	2.3	Added XC3S5000 FG(G)676 to Table 3. Noted that FG(G)1156 package is being discontinued and updated max I/O count.
06/25/2008	2.4	Updated max I/O counts based on FG1156 discontinuation. Clarified dual mark in Package Marking. Updated formatting and links.
12/04/2009	2.5	CP132 and CPG132 packages are being discontinued. Added link to Spartan-3 FPGA customer notices. Updated Table 3 with package footprint dimensions.
10/29/2012	3.0	Added Notice of Disclaimer section. Per XCN07022, updated the discontinued FG1156 and FGG1156 package discussion throughout document. Per XCN08011, updated the discontinued CP132 and CPG132 package discussion throughout document. Although the package is discontinued, updated the marking on Figure 4. This product is not recommended for new designs.
06/27/2013	3.1	Removed banner. This product IS recommended for new designs.

Notice of Disclaimer

THE XILINX HARDWARE FPGA AND CPLD DEVICES REFERRED TO HEREIN ("PRODUCTS") ARE SUBJECT TO THE TERMS AND CONDITIONS OF THE XILINX LIMITED WARRANTY WHICH CAN BE VIEWED AT http://www.xilinx.com/warranty.htm. THIS LIMITED WARRANTY DOES NOT EXTEND TO ANY USE OF PRODUCTS IN AN APPLICATION OR ENVIRONMENT THAT IS NOT WITHIN THE SPECIFICATIONS STATED IN THE XILINX DATA SHEET. ALL SPECIFICATIONS ARE SUBJECT TO CHANGE WITHOUT NOTICE. PRODUCTS ARE NOT DESIGNED OR INTENDED TO BE FAIL-SAFE OR FOR USE IN ANY APPLICATION REQUIRING FAIL-SAFE PERFORMANCE, SUCH AS LIFE-SUPPORT OR SAFETY DEVICES OR SYSTEMS, OR ANY OTHER APPLICATION THAT INVOKES THE POTENTIAL RISKS OF DEATH, PERSONAL INJURY, OR PROPERTY OR ENVIRONMENTAL DAMAGE ("CRITICAL APPLICATIONS"). USE OF PRODUCTS IN CRITICAL APPLICATIONS IS AT THE SOLE RISK OF CUSTOMER, SUBJECT TO APPLICABLE LAWS AND REGULATIONS.

CRITICAL APPLICATIONS DISCLAIMER

XILINX PRODUCTS (INCLUDING HARDWARE, SOFTWARE AND/OR IP CORES) ARE NOT DESIGNED OR INTENDED TO BE FAIL-SAFE, OR FOR USE IN ANY APPLICATION REQUIRING FAIL-SAFE PERFORMANCE, SUCH AS IN LIFE-SUPPORT OR SAFETY DEVICES OR SYSTEMS, CLASS III MEDICAL DEVICES, NUCLEAR FACILITIES, APPLICATIONS RELATED TO THE DEPLOYMENT OF AIRBAGS, OR ANY OTHER APPLICATIONS THAT COULD LEAD TO DEATH, PERSONAL INJURY OR SEVERE PROPERTY OR ENVIRONMENTAL DAMAGE (INDIVIDUALLY AND COLLECTIVELY, "CRITICAL APPLICATIONS"). FURTHERMORE, XILINX PRODUCTS ARE NOT DESIGNED OR INTENDED FOR USE IN ANY APPLICATIONS THAT AFFECT CONTROL OF A VEHICLE OR AIRCRAFT, UNLESS THERE IS A FAIL-SAFE OR REDUNDANCY FEATURE (WHICH DOES NOT INCLUDE USE OF SOFTWARE IN THE XILINX DEVICE TO IMPLEMENT THE REDUNDANCY) AND A WARNING SIGNAL UPON FAILURE TO THE OPERATOR. CUSTOMER AGREES, PRIOR TO USING OR DISTRIBUTING ANY SYSTEMS THAT INCORPORATE XILINX PRODUCTS, TO THOROUGHLY TEST THE SAME FOR SAFETY PURPOSES. TO THE MAXIMUM EXTENT PERMITTED BY APPLICABLE LAW, CUSTOMER ASSUMES THE SOLE RISK AND LIABILITY OF ANY USE OF XILINX PRODUCTS IN CRITICAL APPLICATIONS.

AUTOMOTIVE APPLICATIONS DISCLAIMER

XILINX PRODUCTS ARE NOT DESIGNED OR INTENDED TO BE FAIL-SAFE, OR FOR USE IN ANY APPLICATION REQUIRING FAIL-SAFE PERFORMANCE, SUCH AS APPLICATIONS RELATED TO: (I) THE DEPLOYMENT OF AIRBAGS, (II) CONTROL OF A VEHICLE, UNLESS THERE IS A FAIL-SAFE OR REDUNDANCY FEATURE (WHICH DOES NOT INCLUDE USE OF SOFTWARE IN THE XILINX DEVICE TO IMPLEMENT THE REDUNDANCY) AND A WARNING SIGNAL UPON FAILURE TO THE OPERATOR, OR (III) USES THAT COULD LEAD TO DEATH OR PERSONAL INJURY. CUSTOMER ASSUMES THE SOLE RISK AND LIABILITY OF ANY USE OF XILINX PRODUCTS IN SUCH APPLICATIONS.

Spartan-3 FPGA Design Documentation

The functionality of the Spartan®-3 FPGA family is described in the following documents. The topics covered in each guide are listed.

- UG331: *Spartan-3 Generation FPGA User Guide*
  - Clocking Resources
  - Digital Clock Managers (DCMs)
  - Block RAM
  - Configurable Logic Blocks (CLBs)
    - Distributed RAM
    - SRL16 Shift Registers
    - Carry and Arithmetic Logic
  - I/O Resources
  - Embedded Multiplier Blocks
  - Programmable Interconnect
  - ISE® Software Design Tools
  - IP Cores
  - Embedded Processing and Control Solutions
  - Pin Types and Package Overview
  - Package Drawings
  - Powering FPGAs
- UG332: *Spartan-3 Generation Configuration User Guide*
  - Configuration Overview
    - Configuration Pins and Behavior
    - Bitstream Sizes
  - Detailed Descriptions by Mode
    - Master Serial Mode using Xilinx Platform Flash PROM
    - Slave Parallel (SelectMAP) using a Processor
    - Slave Serial using a Processor
    - JTAG Mode
  - ISE iMPACT Programming Examples

Create a Xilinx user account and sign up to receive automatic e-mail notification whenever this data sheet or the associated user guides are updated.

- **Sign Up for Alerts on Xilinx.com**
  https://secure.xilinx.com/webreg/register.do?group=myprofile&languageID=1

For specific hardware examples, see the Spartan-3 FPGA Starter Kit board web page, which has links to various design examples and the user guide.

- Spartan-3 FPGA Starter Kit Board page
  http://www.xilinx.com/s3starter
- UG130: *Spartan-3 FPGA Starter Kit User Guide*

© Copyright 2003–2013 Xilinx, Inc. XILINX, the Xilinx logo, Virtex, Spartan, ISE, Artix, Kintex, Zynq, Vivado, and other designated brands included herein are trademarks of Xilinx in the United States and other countries. PCI and PCI-X are trademarks of PCI-SIG and used under license. All other trademarks are the property of their respective owners.

IOBs

For additional information, refer to the chapter entitled "Using I/O Resources" in UG331: *Spartan-3 Generation FPGA User Guide*.

IOB Overview

The Input/Output Block (IOB) provides a programmable, bidirectional interface between an I/O pin and the FPGA's internal logic.

A simplified diagram of the IOB's internal structure appears in Figure 7. There are three main signal paths within the IOB: the output path, input path, and 3-state path. Each path has its own pair of storage elements that can act as either registers or latches. For more information, see the Storage Element Functions section. The three main signal paths are as follows:

- The input path carries data from the pad, which is bonded to a package pin, through an optional programmable delay element directly to the I line. There are alternate routes through a pair of storage elements to the IQ1 and IQ2 lines. The IOB outputs I, IQ1, and IQ2 all lead to the FPGA's internal logic. The delay element can be set to ensure a hold time of zero.
- The output path, starting with the O1 and O2 lines, carries data from the FPGA's internal logic through a multiplexer and then a three-state driver to the IOB pad. In addition to this direct path, the multiplexer provides the option to insert a pair of storage elements.
- The 3-state path determines when the output driver is high impedance. The T1 and T2 lines carry data from the FPGA's internal logic through a multiplexer to the output driver. In addition to this direct path, the multiplexer provides the option to insert a pair of storage elements. When the T1 or T2 lines are asserted High, the output driver is high-impedance (floating, hi-Z). The output driver is active-Low enabled.
- All signal paths entering the IOB, including those associated with the storage elements, have an inverter option. Any inverter placed on these paths is automatically absorbed into the IOB.

Storage Element Functions

There are three pairs of storage elements in each IOB, one pair for each of the three paths. It is possible to configure each of these storage elements as an edge-triggered D-type flip-flop (FD) or a level-sensitive latch (LD).

The storage-element-pair on either the Output path or the Three-State path can be used together with a special multiplexer to produce Double-Data-Rate (DDR) transmission. This is accomplished by taking data synchronized to the clock signal's rising edge and converting them to bits synchronized on both the rising and the falling edge. The combination of two registers and a multiplexer is referred to as a Double-Data-Rate D-type flip-flop (FDDR). See Double-Data-Rate Transmission, page 12 for more information.

The signal paths associated with the storage element are described in Table 5.

Table 5: **Storage Element Signal Description**

Storage Element Signal	Description	Function
D	Data input	Data at this input is stored on the active edge of CK enabled by CE. For latch operation when the input is enabled, data passes directly to the output Q.
Q	Data output	The data on this output reflects the state of the storage element. For operation as a latch in transparent mode, Q will mirror the data at D.
CK	Clock input	A signal's active edge on this input with CE asserted, loads data into the storage element.
CE	Clock Enable input	When asserted, this input enables CK. If not connected, CE defaults to the asserted state.
SR	Set/Reset	Forces storage element into the state specified by the SRHIGH/SRLOW attributes. The SYNC/ASYNC attribute setting determines if the SR input is synchronized to the clock or not.
REV	Reverse	Used together with SR. Forces storage element into the state opposite from what SR does.

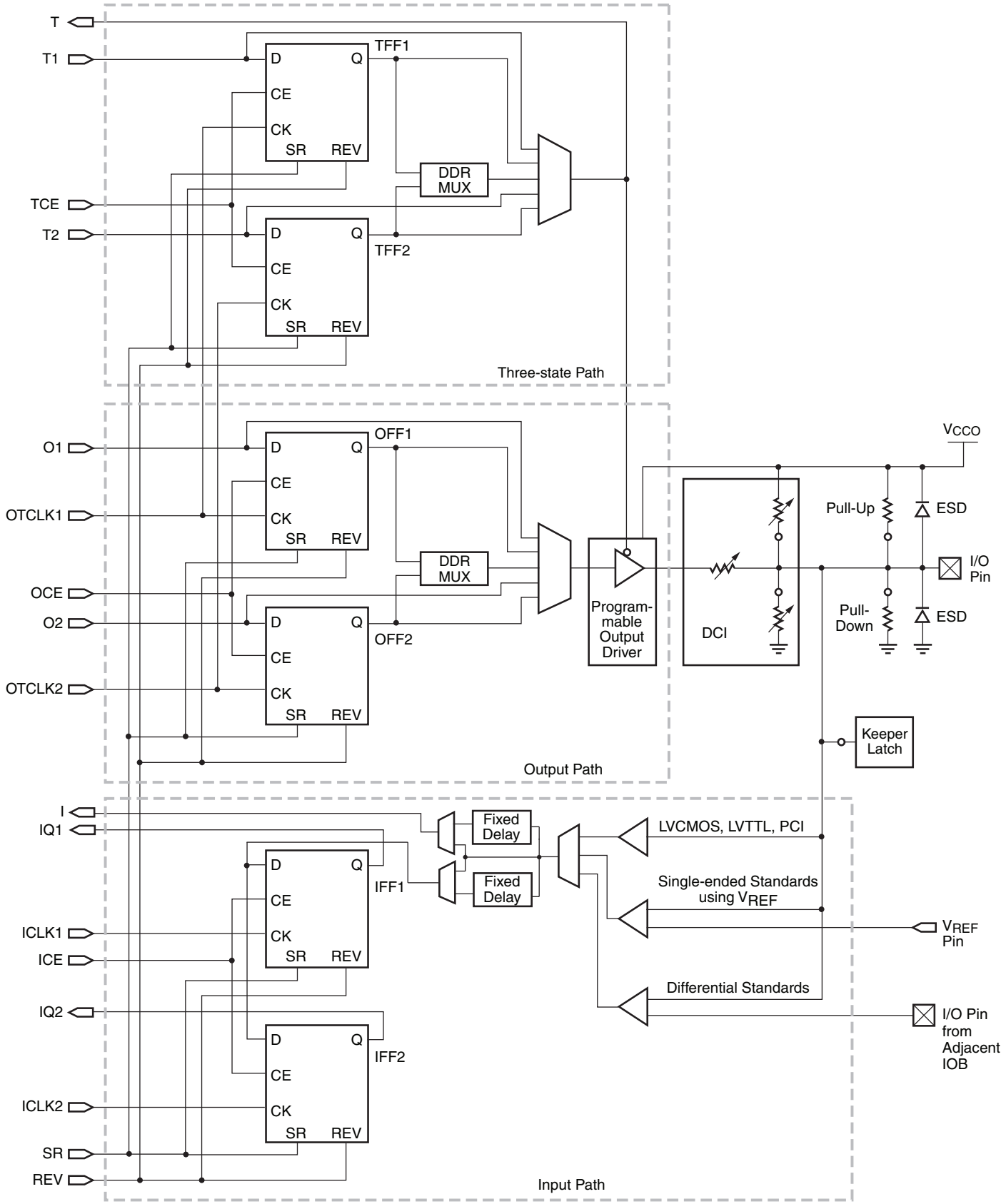

Note: All IOB signals originating from the FPGA's internal logic have an optional polarity inverter.

DS099-2_01_091410

Figure 7: **Simplified IOB Diagram**

According to Figure 7, the clock line OTCLK1 connects the CK inputs of the upper registers on the output and three-state paths. Similarly, OTCLK2 connects the CK inputs for the lower registers on the output and three-state paths. The upper and lower registers on the input path have independent clock lines: ICLK1 and ICLK2. The enable line OCE connects the CE inputs of the upper and lower registers on the output path. Similarly, TCE connects the CE inputs for the register pair on the three-state path and ICE does the same for the register pair on the input path. The Set/Reset (SR) line entering the IOB is common to all six registers, as is the Reverse (REV) line.

Each storage element supports numerous options in addition to the control over signal polarity described in the IOB Overview section. These are described in Table 6.

Table 6: **Storage Element Options**

Option Switch	Function	Specificity
FF/Latch	Chooses between an edge-sensitive flip-flop or a level-sensitive latch	Independent for each storage element.
SYNC/ASYNC	Determines whether SR is synchronous or asynchronous	Independent for each storage element.
SRHIGH/SRLOW	Determines whether SR acts as a Set, which forces the storage element to a logic “1" (SRHIGH) or a Reset, which forces a logic “0” (SRLOW).	Independent for each storage element, except when using FDDR. In the latter case, the selection for the upper element (OFF1 or TFF2) applies to both elements.
INIT1/INIT0	In the event of a Global Set/Reset, after configuration or upon activation of the GSR net, this switch decides whether to set or reset a storage element. By default, choosing SRLOW also selects INIT0; choosing SRHIGH also selects INIT1.	Independent for each storage element, except when using FDDR. In the latter case, selecting INIT0 for one element applies to both elements (even though INIT1 is selected for the other).

Double-Data-Rate Transmission

Double-Data-Rate (DDR) transmission describes the technique of synchronizing signals to both the rising and falling edges of the clock signal. Spartan-3 devices use register-pairs in all three IOB paths to perform DDR operations.

The pair of storage elements on the IOB’s Output path (OFF1 and OFF2), used as registers, combine with a special multiplexer to form a DDR D-type flip-flop (FDDR). This primitive permits DDR transmission where output data bits are synchronized to both the rising and falling edges of a clock. It is possible to access this function by placing either an FDDRRSE or an FDDRCPE component or symbol into the design. DDR operation requires two clock signals (50% duty cycle), one the inverted form of the other. These signals trigger the two registers in alternating fashion, as shown in Figure 8. Commonly, the Digital Clock Manager (DCM) generates the two clock signals by mirroring an incoming signal, then shifting it 180 degrees. This approach ensures minimal skew between the two signals.

The storage-element-pair on the Three-State path (TFF1 and TFF2) can also be combined with a local multiplexer to form an FDDR primitive. This permits synchronizing the output enable to both the rising and falling edges of a clock. This DDR operation is realized in the same way as for the output path.

The storage-element-pair on the input path (IFF1 and IFF2) allows an I/O to receive a DDR signal. An incoming DDR clock signal triggers one register and the inverted clock signal triggers the other register. In this way, the registers take turns capturing bits of the incoming DDR data signal.

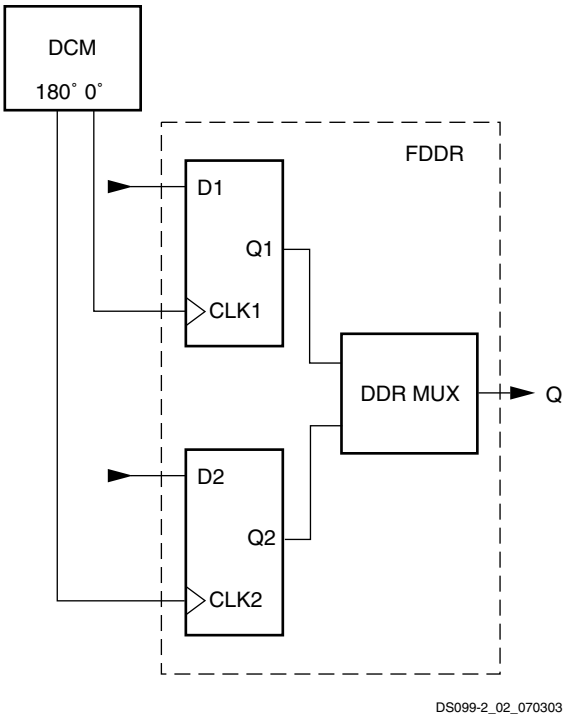

Figure 8: **Clocking the DDR Register**

Aside from high bandwidth data transfers, DDR can also be used to reproduce, or “mirror”, a clock signal on the output. This approach is used to transmit clock and data signals together. A similar approach is used to reproduce a clock signal at multiple outputs. The advantage for both approaches is that skew across the outputs will be minimal.

Some adjacent I/O blocks (IOBs) share common routing connecting the ICLK1, ICLK2, OTCLK1, and OTCLK2 clock inputs of both IOBs. These IOB pairs are identified by their differential pair names IO_LxxN_# and IO_LxxP_#, where "xx" is an I/O pair number and ‘#’ is an I/O bank number. Two adjacent IOBs containing DDR registers must share common clock inputs, otherwise one or more of the clock signals will be unroutable.

Pull-Up and Pull-Down Resistors

The optional pull-up and pull-down resistors are intended to establish High and Low levels, respectively, at unused I/Os. The pull-up resistor optionally connects each IOB pad to V_{CCO}. A pull-down resistor optionally connects each pad to GND. These resistors are placed in a design using the PULLUP and PULLDOWN symbols in a schematic, respectively. They can also be instantiated as components, set as constraints or passed as attributes in HDL code. These resistors can also be selected for all unused I/O using the Bitstream Generator (BitGen) option UnusedPin. A Low logic level on HSWAP_EN activates the pull-up resistors on all I/Os during configuration (see The I/Os During Power-On, Configuration, and User Mode, page 21).

The Spartan-3 FPGAs I/O pull-up and pull-down resistors are significantly stronger than the "weak" pull-up/pull-down resistors used in previous Xilinx FPGA families. See Table 33, page 61 for equivalent resistor strengths.

Keeper Circuit

Each I/O has an optional keeper circuit that retains the last logic level on a line after all drivers have been turned off. This is useful to keep bus lines from floating when all connected drivers are in a high-impedance state. This function is placed in a design using the KEEPER symbol. Pull-up and pull-down resistors override the keeper circuit.

ESD Protection

Clamp diodes protect all device pads against damage from Electro-Static Discharge (ESD) as well as excessive voltage transients. Each I/O has two clamp diodes: One diode extends P-to-N from the pad to V_{CCO} and a second diode extends N-to-P from the pad to GND. During operation, these diodes are normally biased in the off state. These clamp diodes are always connected to the pad, regardless of the signal standard selected. The presence of diodes limits the ability of Spartan-3 FPGA I/Os to tolerate high signal voltages. The V_{IN} absolute maximum rating in Table 28, page 58 specifies the voltage range that I/Os can tolerate.

Slew Rate Control and Drive Strength

Two options, FAST and SLOW, control the output slew rate. The FAST option supports output switching at a high rate. The SLOW option reduces bus transients. These options are only available when using one of the LVCMOS or LVTTL standards, which also provide up to seven different levels of current drive strength: 2, 4, 6, 8, 12, 16, and 24 mA. Choosing the appropriate drive strength level is yet another means to minimize bus transients.

Table 7 shows the drive strengths that the LVCMOS and LVTTL standards support.

Table 7: **Programmable Output Drive Current**

Signal Standard (IOSTANDARD)	Current Drive (mA)						
	2	4	6	8	12	16	24
LVTTL	✓	✓	✓	✓	✓	✓	✓
LVCMOS33	✓	✓	✓	✓	✓	✓	✓
LVCMOS25	✓	✓	✓	✓	✓	✓	✓
LVCMOS18	✓	✓	✓	✓	✓	✓	–
LVCMOS15	✓	✓	✓	✓	✓	–	–
LVCMOS12	✓	✓	✓	–	–	–	–

Boundary-Scan Capability

All Spartan-3 FPGA IOBs support boundary-scan testing compatible with IEEE 1149.1 standards. During boundary- scan operations such as EXTEST and HIGHZ the I/O pull-down resistor is active. For more information, see Boundary-Scan (JTAG) Mode, page 50, and refer to the “Using Boundary-Scan and BSDL Files” chapter in UG331.

SelectIO Interface Signal Standards

The IOBs support 18 different single-ended signal standards, as listed in Table 8. Furthermore, the majority of IOBs can be used in specific pairs supporting any of eight differential signal standards, as shown in Table 9.

To define the SelectIO™ interface signaling standard in a design, set the IOSTANDARD attribute to the appropriate setting. Xilinx provides a variety of different methods for applying the IOSTANDARD for maximum flexibility. For a full description of different methods of applying attributes to control IOSTANDARD, refer to the “Using I/O Resources” chapter in UG331.

Together with placing the appropriate I/O symbol, two externally applied voltage levels, V_{CCO} and V_{REF}, select the desired signal standard. The V_{CCO} lines provide current to the output driver. The voltage on these lines determines the output voltage swing for all standards except GTL and GTLP.

All single-ended standards except the LVCMOS, LVTTL, and PCI varieties require a Reference Voltage (V_{REF}) to bias the input-switching threshold. Once a configuration data file is loaded into the FPGA that calls for the I/Os of a given bank to use such a signal standard, a few specifically reserved I/O pins on the same bank automatically convert to V_{REF} inputs. When using one of the LVCMOS standards, these pins remain I/Os because the V_{CCO} voltage biases the input-switching threshold, so there is no need for V_{REF}. Select the V_{CCO} and V_{REF} levels to suit the desired single-ended standard according to Table 8.

Table 8: **Single-Ended I/O Standards**

Signal Standard (IOSTANDARD)	V_{CCO} (Volts)		V_{REF} for Inputs (Volts)[1]	Board Termination Voltage (V_{TT}) in Volts
	For Outputs	For Inputs		
GTL	Note 2	Note 2	0.8	1.2
GTLP	Note 2	Note 2	1	1.5
HSTL_I	1.5	–	0.75	0.75
HSTL_III	1.5	–	0.9	1.5
HSTL_I_18	1.8	–	0.9	0.9
HSTL_II_18	1.8	–	0.9	0.9
HSTL_III_18	1.8	–	1.1	1.8
LVCMOS12	1.2	1.2	–	–
LVCMOS15	1.5	1.5	–	–
LVCMOS18	1.8	1.8	–	–
LVCMOS25	2.5	2.5	–	–
LVCMOS33	3.3	3.3	–	–
LVTTL	3.3	3.3	–	–
PCI33_3	3.0	3.0	–	–
SSTL18_I	1.8	–	0.9	0.9
SSTL18_II	1.8	–	0.9	0.9
SSTL2_I	2.5	–	1.25	1.25
SSTL2_II	2.5	–	1.25	1.25

Notes:

1. Banks 4 and 5 of any Spartan-3 device in a VQ100 package do not support signal standards using V_{REF}
2. The V_{CCO} level used for the GTL and GTLP standards must be no lower than the termination voltage (V_{TT}), nor can it be lower than the voltage at the I/O pad.
3. See Table 10 for a listing of the single-ended DCI standards.

Differential standards employ a pair of signals, one the opposite polarity of the other. The noise canceling (e.g., Common-Mode Rejection) properties of these standards permit exceptionally high data transfer rates. This section introduces the differential signaling capabilities of Spartan-3 devices.

Each device-package combination designates specific I/O pairs that are specially optimized to support differential standards. A unique “L-number”, part of the pin name, identifies the line-pairs associated with each bank (see Figure 40, page 112). For each pair, the letters ‘P’ and ‘N’ designate the true and inverted lines, respectively. For example, the pin names IO_L43P_7 and IO_L43N_7 indicate the true and inverted lines comprising the line pair L43 on Bank 7. The V_{CCO} lines provide current to the outputs. The V_{CCAUX} lines supply power to the differential inputs, making them independent of the V_{CCO} voltage for an I/O bank. The V_{REF} lines are not used. Select the V_{CCO} level to suit the desired differential standard according to Table 9.

Table 9: **Differential I/O Standards**

Signal Standard (IOSTANDARD)	V_{CCO} (Volts)		V_{REF} for Inputs (Volts)
	For Outputs	For Inputs	
LDT_25 (ULVDS_25)	2.5	–	–
LVDS_25	2.5	–	–
BLVDS_25	2.5	–	–
LVDSEXT_25	2.5	–	–
LVPECL_25	2.5	–	–
RSDS_25	2.5	–	–
DIFF_HSTL_II_18	1.8	–	–
DIFF_SSTL2_II	2.5	–	–

Notes:

1. See Table 10 for a listing of the differential DCI standards.

The need to supply V_{REF} and V_{CCO} imposes constraints on which standards can be used in the same bank. See The Organization of IOBs into Banks section for additional guidelines concerning the use of the V_{CCO} and V_{REF} lines.

Digitally Controlled Impedance (DCI)

When the round-trip delay of an output signal—i.e., from output to input and back again—exceeds rise and fall times, it is common practice to add termination resistors to the line carrying the signal. These resistors effectively match the impedance of a device's I/O to the characteristic impedance of the transmission line, thereby preventing reflections that adversely affect signal integrity. However, with the high I/O counts supported by modern devices, adding resistors requires significantly more components and board area. Furthermore, for some packages—e.g., ball grid arrays—it may not always be possible to place resistors close to pins.

DCI answers these concerns by providing two kinds of on-chip terminations: Parallel terminations make use of an integrated resistor network. Series terminations result from controlling the impedance of output drivers. DCI actively adjusts both parallel and series terminations to accurately match the characteristic impedance of the transmission line. This adjustment process compensates for differences in I/O impedance that can result from normal variation in the ambient temperature, the supply voltage and the manufacturing process. When the output driver turns off, the series termination, by definition, approaches a very high impedance; in contrast, parallel termination resistors remain at the targeted values.

DCI is available only for certain I/O standards, as listed in Table 10. DCI is selected by applying the appropriate I/O standard extensions to symbols or components. There are five basic ways to configure terminations, as shown in Table 11. The DCI I/O standard determines which of these terminations is put into effect.

HSTL_I_DCI-, HSTL_III_DCI-, and SSTL2_I_DCI-type outputs do not require the VRN and VRP reference resistors. Likewise, LVDCI-type inputs do not require the VRN and VRP reference resistors. In a bank without any DCI I/O or a bank containing non-DCI I/O and purely HSTL_I_DCI- or HSTL_III_DCI-type outputs, or SSTL2_I_DCI-type outputs or LVDCI-type inputs, the associated VRN and VRP pins can be used as general-purpose I/O pins.

The HSLVDCI (High-Speed LVDCI) standard is intended for bidirectional use. The driver is identical to LVDCI, while the input is identical to HSTL. By using a V_{REF}-referenced input, HSLVDCI allows greater input sensitivity at the receiver than when using a single-ended LVCMOS-type receiver.

Table 10: **DCI I/O Standards**

Category of Signal Standard	Signal Standard (IOSTANDARD)	V_{CCO} (V)		V_{REF} for Inputs (V)	Termination Type	
		For Outputs	For Inputs		At Output	At Input
Single-Ended						
Gunning Transceiver Logic	GTL_DCI	1.2	1.2	0.8	Single	Single
	GTLP_DCI	1.5	1.5	1.0		
High-Speed Transceiver Logic	HSTL_I_DCI	1.5	1.5	0.75	None	Split
	HSTL_III_DCI	1.5	1.5	0.9	None	Single
	HSTL_I_DCI_18	1.8	1.8	0.9	None	Split
	HSTL_II_DCI_18 DIFF_HSTL_II_18_DCI	1.8	1.8	0.9	Split	
	HSTL_III_DCI_18	1.8	1.8	1.1	None	Single
Low-Voltage CMOS	LVDCI_15	1.5	1.5	–	Controlled impedance driver	None
	LVDCI_18	1.8	1.8	–		
	LVDCI_25	2.5	2.5	–		
	LVDCI_33[2]	3.3	3.3	–		
	LVDCI_DV2_15	1.5	1.5	–	Controlled driver with half-impedance	
	LVDCI_DV2_18	1.8	1.8	–		
	LVDCI_DV2_25	2.5	2.5	–		
	LVDCI_DV2_33	3.3	3.3	–		
Hybrid HSTL Input and LVCMOS Output	HSLVDCI_15	1.5	1.5	0.75	Controlled impedance driver	None
	HSLVDCI_18	1.8	1.8	0.9		
	HSLVDCI_25	2.5	2.5	1.25		
	HSLVDCI_33	3.3	3.3	1.65		
Stub Series Terminated Logic[3]	SSTL18_I_DCI	1.8	1.8	0.9	25Ω driver	Split
	SSTL2_I_DCI	2.5	2.5	1.25	25Ω driver	
	SSTL2_II_DCI DIFF_SSTL2_II_DCI	2.5	2.5	1.25	Split with 25Ω driver	
Differential						
Low-Voltage Differential Signaling	LVDS_25_DCI	N/A	2.5	–	None	Split on each line of pair
	LVDSEXT_25_DCI	N/A	2.5	–		

Notes:

1. DCI signal standards are not supported in Bank 5 of any Spartan-3 FPGA packaged in a VQ100, CP132, or TQ144 package.
2. Equivalent to LVTTL DCI.
3. The SSTL18_II signal standard does not have a DCI equivalent.

Table 11: **DCI Terminations**

Termination	Schematic[1]	Signal Standards (IOSTANDARD)
Controlled impedance output driver	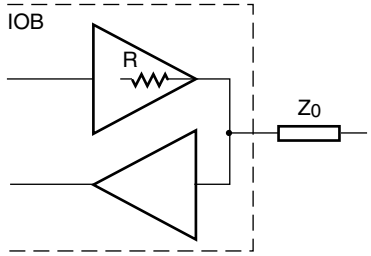 ds099_06a_070903	LVDCI_15 LVDCI_18 LVDCI_25 LVDCI_33 HSLVDCI_15 HSLVDCI_18 HSLVDCI_25 HSLVDCI_33
Controlled output driver with half impedance	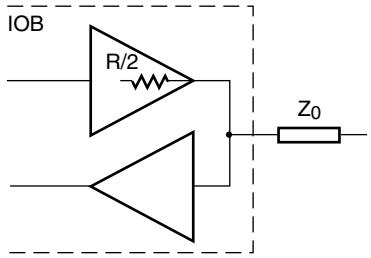 ds099_06b_070903	LVDCI_DV2_15 LVDCI_DV2_18 LVDCI_DV2_25 LVDCI_DV2_33
Single resistor	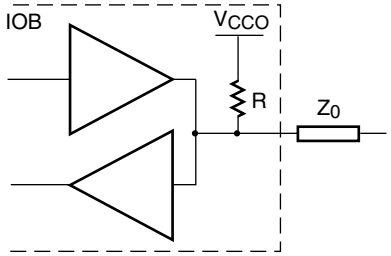 ds099_06c_070903	GTL_DCI GTLP_DCI HSTL_III_DCI[2] HSTL_III_DCI_18[2]
Split resistors	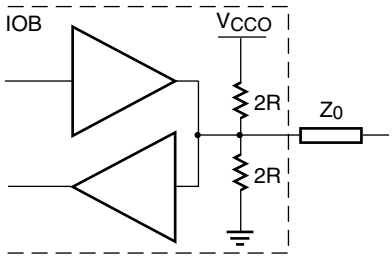 ds099_06d_070903	HSTL_I_DCI[2] HSTL_I_DCI_18[2] HSTL_II_DCI_18 DIFF_HSTL_II_18_DCI DIFF_SSTL2_II_DCI LVDS_25_DCI LVDSEXT_25_DCI
Split resistors with output driver impedance fixed to 25Ω	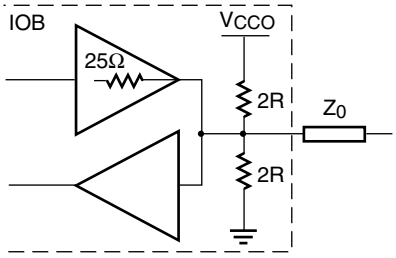 ds099_06e_070903	SSTL18_I_DCI[3] SSTL2_I_DCI[3] SSTL2_II_DCI

Notes:

1. The value of R is equivalent to the characteristic impedance of the line connected to the I/O. It is also equal to half the value of RREF for the DV2 standards and RREF for all other DCI standards.
2. For DCI using HSTL Classes I and III, terminations only go into effect at inputs (not at outputs).
3. For DCI using SSTL Class I, the split termination only goes into effect at inputs (not at outputs).

The DCI feature operates independently for each of the device's eight banks. Each bank has an 'N' reference pin (VRN) and a 'P' reference pin, (VRP), to calibrate driver and termination resistance. Only when using a DCI standard on a given bank do these two pins function as VRN and VRP. When not using a DCI standard, the two pins function as user I/Os. As shown in Figure 9, add an external reference resistor to pull the VRN pin up to V_{CCO} and another reference resistor to pull the VRP pin down to GND. Also see Figure 42, page 116. Both resistors have the same value—commonly 50Ω—with one-percent tolerance, which is either the characteristic impedance of the line or twice that, depending on the DCI standard in use. Standards having a symbol name that contains the letters "DV2" use a reference resistor value that is twice the line impedance. DCI adjusts the output driver impedance to match the reference resistors' value or half that, according to the standard. DCI always adjusts the on-chip termination resistors to directly match the reference resistors' value.

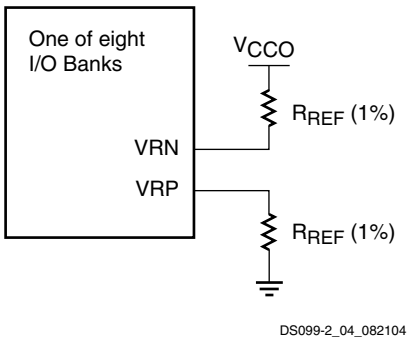

Figure 9: **Connection of Reference Resistors (R_{REF})**

The rules guiding the use of DCI standards on banks are as follows:

- No more than one DCI I/O standard with a Single Termination is allowed per bank.
- No more than one DCI I/O standard with a Split Termination is allowed per bank.
- Single Termination, Split Termination, Controlled- Impedance Driver, and Controlled-Impedance Driver with Half Impedance can co-exist in the same bank.

See also The Organization of IOBs into Banks, immediately below, and DCI: User I/O or Digitally Controlled Impedance Resistor Reference Input, page 115.

The Organization of IOBs into Banks

IOBs are allocated among eight banks, so that each side of the device has two banks, as shown in Figure 10. For all packages, each bank has independent V_{REF} lines. For example, V_{REF} Bank 3 lines are separate from the V_{REF} lines going to all other banks.

For the Very Thin Quad Flat Pack (VQ), Plastic Quad Flat Pack (PQ), Fine Pitch Thin Ball Grid Array (FT), and Fine Pitch Ball Grid Array (FG) packages, each bank has dedicated V_{CCO} lines. For example, the V_{CCO} Bank 7 lines are separate from the V_{CCO} lines going to all other banks. Thus, Spartan-3 devices in these packages support eight independent V_{CCO} supplies.

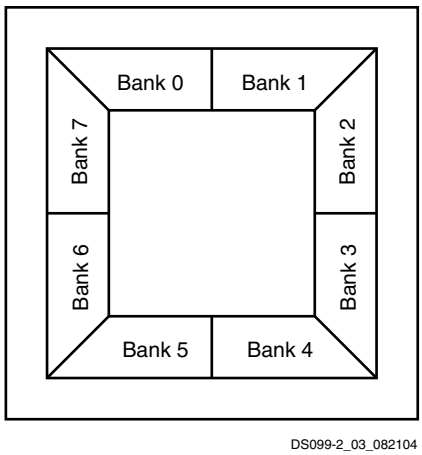

Figure 10: **Spartan-3 FPGA I/O Banks (Top View)**

In contrast, the 144-pin Thin Quad Flat Pack (TQ144) package and the 132-pin Chip-Scale Package (CP132) tie V_{CCO} together internally for the pair of banks on each side of the device. For example, the V_{CCO} Bank 0 and the V_{CCO} Bank 1 lines are tied together. The interconnected bank-pairs are 0/1, 2/3, 4/5, and 6/7. As a result, Spartan-3 devices in the CP132 and TQ144 packages support four independent V_{CCO} supplies.

Note: The CP132 package is discontinued. See http://www.xilinx.com/support/documentation /spartan-3_customer_notices.htm.

Spartan-3 FPGA Compatibility

Within the Spartan-3 family, all devices are pin-compatible by package. When the need for future logic resources outgrows the capacity of the Spartan-3 device in current use, a larger device in the same package can serve as a direct replacement. Larger devices may add extra V_{REF} and V_{CCO} lines to support a greater number of I/Os. In the larger device, more pins can convert from user I/Os to V_{REF} lines. Also, additional V_{CCO} lines are bonded out to pins that were “not connected” in the smaller device. Thus, it is important to plan for future upgrades at the time of the board’s initial design by laying out connections to the extra pins.

The Spartan-3 family is not pin-compatible with any previous Xilinx FPGA family or with other platforms among the Spartan-3 Generation FPGAs.

Rules Concerning Banks

When assigning I/Os to banks, it is important to follow the following V_{CCO} rules:

- Leave no V_{CCO} pins unconnected on the FPGA.
- Set all V_{CCO} lines associated with the (interconnected) bank to the same voltage level.
- The V_{CCO} levels used by all standards assigned to the I/Os of the (interconnected) bank(s) must agree. The Xilinx development software checks for this. Tables 8, 9, and 10 describe how different standards use the V_{CCO} supply.
- Only one of the following standards is allowed on outputs per bank: LVDS, LDT, LVDS_EXT, or RSDS. This restriction is for the eight banks in each device, even if the V_{CCO} levels are shared across banks, as in the CP132 and TQ144 packages.
- If none of the standards assigned to the I/Os of the (interconnected) bank(s) uses V_{CCO}, tie all associated V_{CCO} lines to 2.5V.
- In general, apply 2.5V to V_{CCO} Bank 4 from power-on to the end of configuration. Apply the same voltage to V_{CCO} Bank 5 during parallel configuration or a Readback operation. For information on how to program the FPGA using 3.3V signals and power, see the 3.3V-Tolerant Configuration Interface section.

If any of the standards assigned to the Inputs of the bank use V_{REF}, then observe the following additional rules:

- Connect *all* V_{REF} pins within the bank to the same voltage level.
- The V_{REF} levels used by all standards assigned to the Inputs of the bank must agree. The Xilinx development software checks for this. Tables 8 and 10 describe how different standards use the V_{REF} supply.

If none of the standards assigned to the Inputs of a bank use V_{REF} for biasing input switching thresholds, all associated V_{REF} pins function as User I/Os.

Exceptions to Banks Supporting I/O Standards

Bank 5 of any Spartan-3 device in a VQ100, CP132, or TQ144 package does not support DCI signal standards. In this case, bank 5 has neither VRN nor VRP pins.

Furthermore, banks 4 and 5 of any Spartan-3 device in a VQ100 package do not support signal standards using V_{REF} (see Table 8). In this case, the two banks do not have any V_{REF} pins.

Supply Voltages for the IOBs

Three different supplies power the IOBs:

- The V_{CCO} supplies, one for each of the FPGA's I/O banks, power the output drivers, except when using the GTL and GTLP signal standards. The voltage on the V_{CCO} pins determines the voltage swing of the output signal.
- V_{CCINT} is the main power supply for the FPGA's internal logic.
- The V_{CCAUX} is an auxiliary source of power, primarily to optimize the performance of various FPGA functions such as I/O switching.

The I/Os During Power-On, Configuration, and User Mode

With no power applied to the FPGA, all I/Os are in a high-impedance state. The V_{CCINT} (1.2V), V_{CCAUX} (2.5V), and V_{CCO} supplies may be applied in any order. Before power-on can finish, V_{CCINT}, V_{CCO} Bank 4, and V_{CCAUX} must have reached their respective minimum recommended operating levels (see Table 29, page 59). At this time, all I/O drivers also will be in a high-impedance state. V_{CCO} Bank 4, V_{CCINT}, and V_{CCAUX} serve as inputs to the internal Power-On Reset circuit (POR).

A Low level applied to the HSWAP_EN input enables pull-up resistors on User I/Os from power-on throughout configuration. A High level on HSWAP_EN disables the pull-up resistors, allowing the I/Os to float. If the HSWAP_EN pin is floating, then an internal pull-up resistor pulls HSWAP_EN High. As soon as power is applied, the FPGA begins initializing its configuration memory. At the same time, the FPGA internally asserts the Global Set-Reset (GSR), which asynchronously resets all IOB storage elements to a Low state.

Upon the completion of initialization, INIT_B goes High, sampling the M0, M1, and M2 inputs to determine the configuration mode. At this point, the configuration data is loaded into the FPGA. The I/O drivers remain in a high-impedance state (with or without pull-up resistors, as determined by the HSWAP_EN input) throughout configuration.

The Global Three State (GTS) net is released during Start-Up, marking the end of configuration and the beginning of design operation in the User mode. At this point, those I/Os to which signals have been assigned go active while all unused I/Os remain in a high-impedance state. The release of the GSR net, also part of Start-up, leaves the IOB registers in a Low state by default, unless the loaded design reverses the polarity of their respective RS inputs.

In User mode, all internal pull-up resistors on the I/Os are disabled and HSWAP_EN becomes a "don't care" input. If it is desirable to have pull-up or pull-down resistors on I/Os carrying signals, the appropriate symbol—e.g., PULLUP, PULLDOWN—must be placed at the appropriate pads in the design. The Bitstream Generator (Bitgen) option UnusedPin available in the Xilinx development software determines whether unused I/Os collectively have pull-up resistors, pull-down resistors, or no resistors in User mode.

CLB Overview

For more details on the CLBs, refer to the chapter entitled "Using Configurable Logic Blocks" in UG331.

The Configurable Logic Blocks (CLBs) constitute the main logic resource for implementing synchronous as well as combinatorial circuits. Each CLB comprises four interconnected slices, as shown in Figure 11. These slices are grouped in pairs. Each pair is organized as a column with an independent carry chain.

The nomenclature that the FPGA Editor—part of the Xilinx development software—uses to designate slices is as follows: The letter 'X' followed by a number identifies columns of slices. The 'X' number counts up in sequence from the left side of the die to the right. The letter 'Y' followed by a number identifies the position of each slice in a pair as well as indicating the CLB row. The 'Y' number counts slices starting from the bottom of the die according to the sequence: 0, 1, 0, 1 (the first CLB row); 2, 3, 2, 3 (the second CLB row); etc. Figure 11 shows the CLB located in the lower left-hand corner of the die. Slices X0Y0 and X0Y1 make up the column-pair on the left where as slices X1Y0 and X1Y1 make up the column-pair on the right. For each CLB, the term "left-hand" (or SLICEM) indicates the pair of slices labeled with an even 'X' number, such as X0, and the term "right-hand" (or SLICEL) designates the pair of slices with an odd 'X' number, e.g., X1.

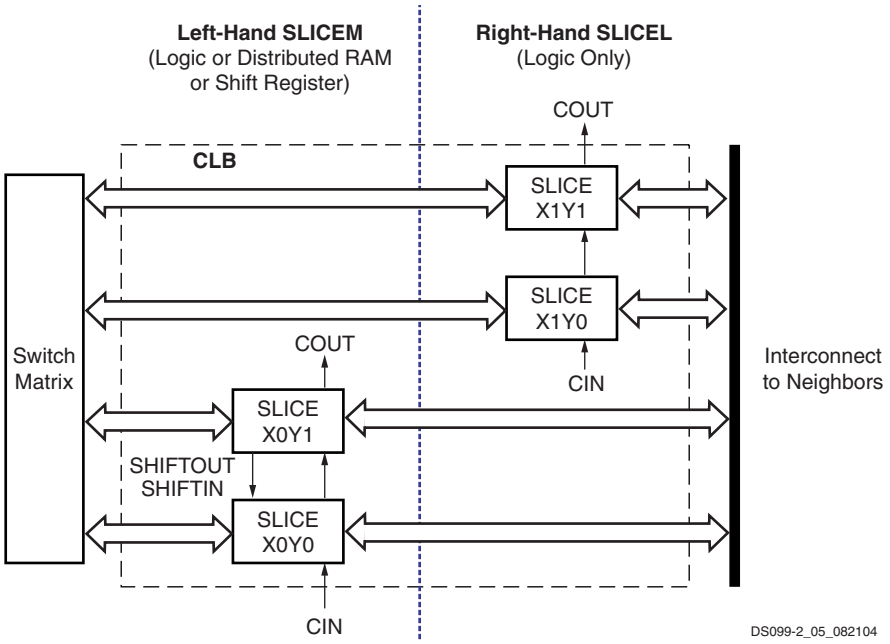

Figure 11: **Arrangement of Slices within the CLB**

Elements Within a Slice

All four slices have the following elements in common: two logic function generators, two storage elements, wide-function multiplexers, carry logic, and arithmetic gates, as shown in Figure 12, page 24. Both the left-hand and right-hand slice pairs use these elements to provide logic, arithmetic, and ROM functions. Besides these, the left-hand pair supports two additional functions: storing data using Distributed RAM and shifting data with 16-bit registers. Figure 12 is a diagram of the left-hand slice; therefore, it represents a superset of the elements and connections to be found in all slices. See Function Generator, page 25 for more information.

The RAM-based function generator—also known as a Look-Up Table or LUT—is the main resource for implementing logic functions. Furthermore, the LUTs in each left-hand slice pair can be configured as Distributed RAM or a 16-bit shift register. For information on the former, refer to the chapter entitled “Using Look-Up Tables as Distributed RAM” in UG331; for information on the latter, refer to the chapter entitled “Using Look-Up Tables as Shift Registers” in UG331. The function generators located in the upper and lower portions of the slice are referred to as the "G" and "F", respectively.

The storage element, which is programmable as either a D-type flip-flop or a level-sensitive latch, provides a means for synchronizing data to a clock signal, among other uses. The storage elements in the upper and lower portions of the slice are called FFY and FFX, respectively.

Wide-function multiplexers effectively combine LUTs in order to permit more complex logic operations. Each slice has two of these multiplexers with F5MUX in the lower portion of the slice and FiMUX in the upper portion. Depending on the slice, FiMUX takes on the name F6MUX, F7MUX, or F8MUX. For more details on the multiplexers, refer to the chapter entitled “Using Dedicated Multiplexers” in UG331.

The carry chain, together with various dedicated arithmetic logic gates, support fast and efficient implementations of math operations. The carry chain enters the slice as CIN and exits as COUT. Five multiplexers control the chain: CYINIT, CY0F, and CYMUXF in the lower portion as well as CY0G and CYMUXG in the upper portion. The dedicated arithmetic logic includes the exclusive-OR gates XORG and XORF (upper and lower portions of the slice, respectively) as well as the AND gates GAND and FAND (upper and lower portions, respectively). For more details on the carry logic, refer to the chapter entitled “Using Carry and Arithmetic Logic” in UG331.

Main Logic Paths

Central to the operation of each slice are two nearly identical data paths, distinguished using the terms *top* and *bottom*. The description that follows uses names associated with the bottom path. (The top path names appear in parentheses.) The basic path originates at an interconnect-switch matrix outside the CLB. Four lines, F1 through F4 (or G1 through G4 on the

upper path), enter the slice and connect directly to the LUT. Once inside the slice, the lower 4-bit path passes through a function generator ‘F’ (or ‘G’) that performs logic operations. The function generator’s Data output, ‘D’, offers five possible paths:

- Exit the slice via line ‘X’ (or ‘Y’) and return to interconnect.
- Inside the slice, ‘X’ (or ‘Y’) serves as an input to the DXMUX (DYMUX) which feeds the data input, ‘D’, of the FFX (FFY) storage element. The ‘Q’ output of the storage element drives the line XQ (or YQ) which exits the slice.
- Control the CYMUXF (or CYMUXG) multiplexer on the carry chain.
- With the carry chain, serve as an input to the XORF (or XORG) exclusive-OR gate that performs arithmetic operations, producing a result on ‘X’ (or ‘Y’).
- Drive the multiplexer F5MUX to implement logic functions wider than four bits. The ‘D’ outputs of both the F-LUT and G-LUT serve as data inputs to this multiplexer.

In addition to the main logic paths described above, there are two bypass paths that enter the slice as BX and BY. Once inside the FPGA, BX in the bottom half of the slice (or BY in the top half) can take any of several possible branches:

- Bypass both the LUT and the storage element, then exit the slice as BXOUT (or BYOUT) and return to interconnect.
- Bypass the LUT, then pass through a storage element via the D input before exiting as XQ (or YQ).
- Control the wide function multiplexer F5MUX (or F6MUX).
- Via multiplexers, serve as an input to the carry chain.
- Drives the DI input of the LUT.
- BY can control the REV inputs of both the FFY and FFX storage elements.
- Finally, the DIG_MUX multiplexer can switch BY onto the DIG line, which exits the slice.

Other slice signals shown in Figure 12 are discussed in the sections that follow.

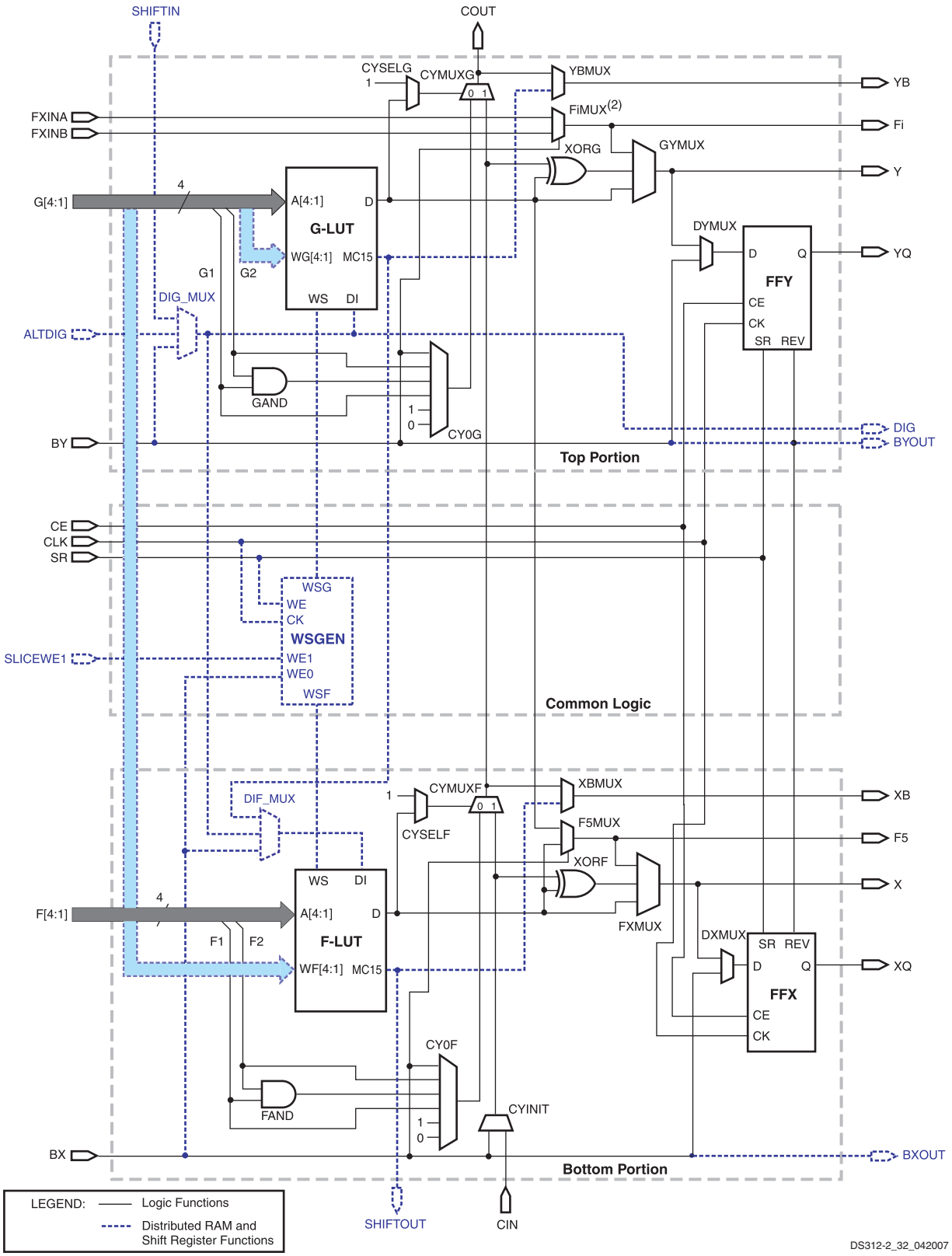

Notes:

1. Options to invert signal polarity as well as other options that enable lines for various functions are not shown.
2. The index i can be 6, 7, or 8, depending on the slice. In this position, the upper right-hand slice has an F8MUX, and the upper left-hand slice has an F7MUX. The lower right-hand and left-hand slices both have an F6MUX.

Figure 12: **Simplified Diagram of the Left-Hand SLICEM**

Function Generator

Each of the two LUTs (F and G) in a slice have four logic inputs (A1-A4) and a single output (D). This permits any four-variable Boolean logic operation to be programmed into them. Furthermore, wide function multiplexers can be used to effectively combine LUTs within the same CLB or across different CLBs, making logic functions with still more input variables possible.

The LUTs in both the right-hand and left-hand slice-pairs not only support the logic functions described above, but also can function as ROM that is initialized with data at the time of configuration.

The LUTs in the left-hand slice-pair (even-numbered columns such as X0 in Figure 11) of each CLB support two additional functions that the right-hand slice-pair (odd-numbered columns such as X1) do not.

First, it is possible to program the “left-hand LUTs” as distributed RAM. This type of memory affords moderate amounts of data buffering anywhere along a data path. One left-hand LUT stores 16 bits. Multiple left-hand LUTs can be combined in various ways to store larger amounts of data. A dual port option combines two LUTs so that memory access is possible from two independent data lines. A Distributed ROM option permits pre-loading the memory with data during FPGA configuration.

Second, it is possible to program each left-hand LUT as a 16-bit shift register. Used in this way, each LUT can delay serial data anywhere from one to 16 clock cycles. The four left-hand LUTs of a single CLB can be combined to produce delays up to 64 clock cycles. The SHIFTIN and SHIFTOUT lines cascade LUTs to form larger shift registers. It is also possible to combine shift registers across more than one CLB. The resulting programmable delays can be used to balance the timing of data pipelines.

Block RAM Overview

All Spartan-3 devices support block RAM, which is organized as configurable, synchronous 18Kbit blocks. Block RAM stores relatively large amounts of data more efficiently than the distributed RAM feature described earlier. (The latter is better suited for buffering small amounts of data anywhere along signal paths.) This section describes basic Block RAM functions. For more information, refer to the chapter entitled “Using Block RAM” in UG331.

The aspect ratio—i.e., width vs. depth—of each block RAM is configurable. Furthermore, multiple blocks can be cascaded to create still wider and/or deeper memories.

A choice among primitives determines whether the block RAM functions as dual- or single-port memory. A name of the form RAMB16_S[w_A]_S[w_B] calls out the dual-port primitive, where the integers w_A and w_B specify the total data path width at ports w_A and w_B, respectively. Thus, a RAMB16_S9_S18 is a dual-port RAM with a 9-bit-wide Port A and an 18-bit-wide Port B. A name of the form RAMB16_S[w] identifies the single-port primitive, where the integer w specifies the total data path width of the lone port. A RAMB16_S18 is a single-port RAM with an 18-bit-wide port. Other memory functions—e.g., FIFOs, data path width conversion, ROM, etc.—are readily available using the CORE Generator™ software, part of the Xilinx development software.

Arrangement of RAM Blocks on Die

The XC3S50 has one column of block RAM. The Spartan-3 devices ranging from the XC3S200 to XC3S2000 have two columns of block RAM. The XC3S4000 and XC3S5000 have four columns. The position of the columns on the die is shown in Figure 1, page 3. For a given device, the total available RAM blocks are distributed equally among the columns. Table 12 shows the number of RAM blocks, the data storage capacity, and the number of columns for each device.

Table 12: **Number of RAM Blocks by Device**

Device	Total Number of RAM Blocks	Total Addressable Locations (Bits)	Number of Columns
XC3S50	4	73,728	1
XC3S200	12	221,184	2
XC3S400	16	294,912	2
XC3S1000	24	442,368	2
XC3S1500	32	589,824	2
XC3S2000	40	737,280	2
XC3S4000	96	1,769,472	4
XC3S5000	104	1,916,928	4

Block RAM and multipliers have interconnects between them that permit simultaneous operation; however, since the multiplier shares inputs with the upper data bits of block RAM, the maximum data path width of the block RAM is 18 bits in this case.

The Internal Structure of the Block RAM

The block RAM has a dual port structure. The two identical data ports called A and B permit independent access to the common RAM block, which has a maximum capacity of 18,432 bits—or 16,384 bits when no parity lines are used. Each port has its own dedicated set of data, control and clock lines for synchronous read and write operations. There are four basic data paths, as shown in Figure 13: (1) write to and read from Port A, (2) write to and read from Port B, (3) data transfer from Port A to Port B, and (4) data transfer from Port B to Port A.

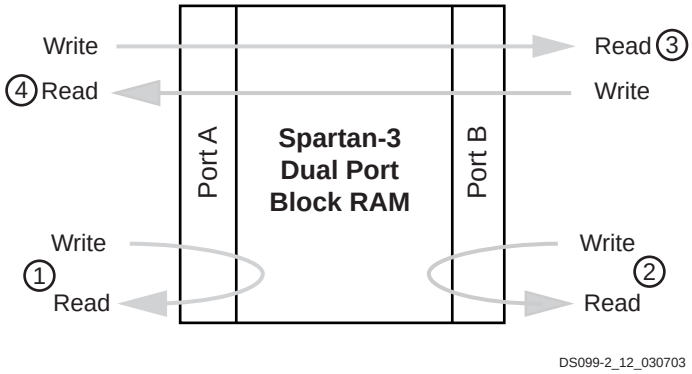

Figure 13: **Block RAM Data Paths**

Block RAM Port Signal Definitions

Representations of the dual-port primitive RAMB16_S[w_A]_S[w_B] and the single-port primitive RAMB16_S[w] with their associated signals are shown in Figure 14. These signals are defined in Table 13.

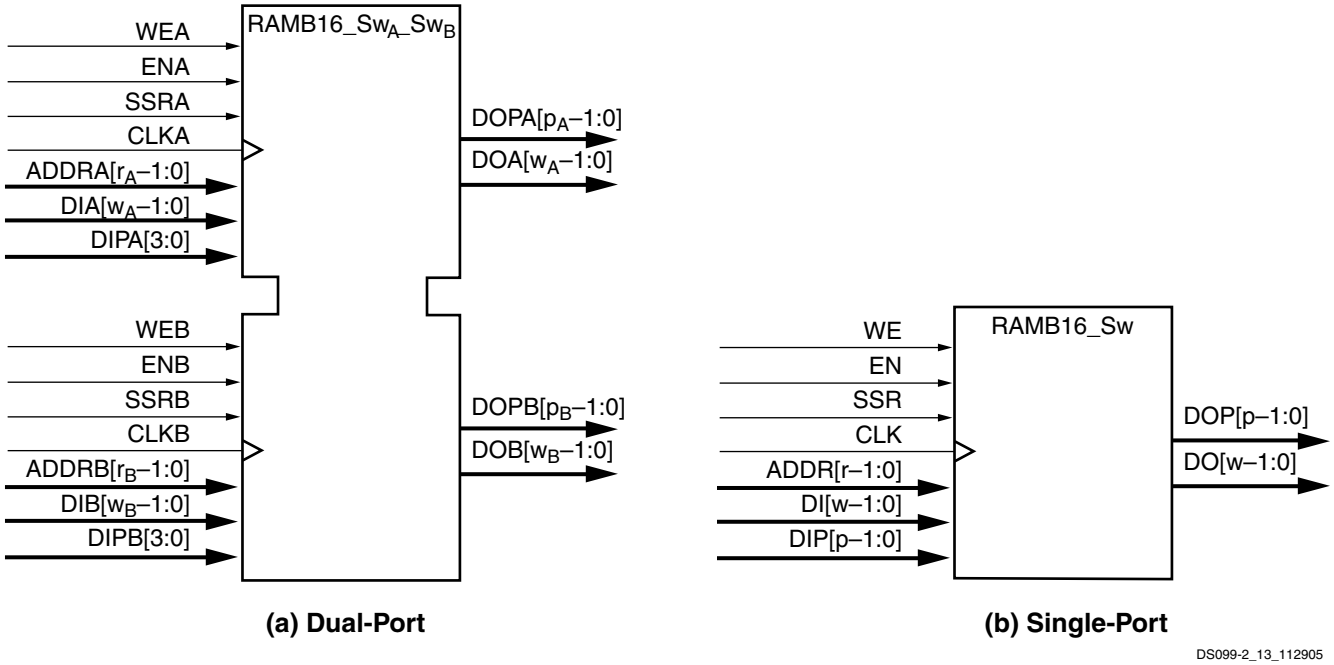

Notes:

1. w_A and w_B are integers representing the total data path width (i.e., data bits plus parity bits) at ports A and B, respectively.
2. p_A and p_B are integers that indicate the number of data path lines serving as parity bits.
3. r_A and r_B are integers representing the address bus width at ports A and B, respectively.
4. The control signals CLK, WE, EN, and SSR on both ports have the option of inverted polarity.

Figure 14: **Block RAM Primitives**

Table 13: **Block RAM Port Signals**

Signal Description	Port A Signal Name	Port B Signal Name	Direction	Function
Address Bus	ADDRA	ADDRB	Input	The Address Bus selects a memory location for read or write operations. The width (w) of the port's associated data path determines the number of available address lines (r). Whenever a port is enabled (ENA or ENB = High), address transitions must meet the data sheet setup and hold times with respect to the port clock (CLKA or CLKB). This requirement must be met, even if the RAM read output is of no interest.
Data Input Bus	DIA	DIB	Input	Data at the DI input bus is written to the addressed memory location addressed on an enabled active CLK edge. It is possible to configure a port's total data path width (w) to be 1, 2, 4, 9, 18, or 36 bits. This selection applies to both the DI and DO paths of a given port. Each port is independent. For a port assigned a width (w), the number of addressable locations is 16,384/(w-p) where "p" is the number of parity bits. Each memory location has a width of "w" (including parity bits). See the DIP signal description for more information of parity.
Parity Data Input(s)	DIPA	DIPB	Input	Parity inputs represent additional bits included in the data input path to support error detection. The number of parity bits "p" included in the DI (same as for the DO bus) depends on a port's total data path width (w). See Table 14.

Table 13: **Block RAM Port Signals *(Cont'd)***

Signal Description	Port A Signal Name	Port B Signal Name	Direction	Function
Data Output Bus	DOA	DOB	Output	Basic data access occurs whenever WE is inactive. The DO outputs mirror the data stored in the addressed memory location. Data access with WE asserted is also possible if one of the following two attributes is chosen: WRITE_FIRST and READ_FIRST. WRITE_FIRST simultaneously presents the new input data on the DO output port and writes the data to the address RAM location. READ_FIRST presents the previously stored RAM data on the DO output port while writing new data to RAM. A third attribute, NO_CHANGE, latches the DO outputs upon the assertion of WE. It is possible to configure a port's total data path width (w) to be 1, 2, 4, 9, 18, or 36 bits. This selection applies to both the DI and DO paths. See the DI signal description.
Parity Data Output(s)	DOPA	DOPB	Output	Parity inputs represent additional bits included in the data input path to support error detection. The number of parity bits "p" included in the DI (same as for the DO bus) depends on a port's total data path width (w). See Table 14.
Write Enable	WEA	WEB	Input	When asserted together with EN, this input enables the writing of data to the RAM. In this case, the data access attributes WRITE_FIRST, READ_FIRST or NO_CHANGE determines if and how data is updated on the DO outputs. See the DO signal description. When WE is inactive with EN asserted, read operations are still possible. In this case, a transparent latch passes data from the addressed memory location to the DO outputs.
Clock Enable	ENA	ENB	Input	When asserted, this input enables the CLK signal to synchronize Block RAM functions as follows: the writing of data to the DI inputs (when WE is also asserted), the updating of data at the DO outputs as well as the setting/resetting of the DO output latches. When de-asserted, the above functions are disabled.
Set/Reset	SSRA	SSRB	Input	When asserted, this pin forces the DO output latch to the value that the SRVAL attribute is set to. A Set/Reset operation on one port has no effect on the other ports functioning, nor does it disturb the memory's data contents. It is synchronized to the CLK signal.
Clock	CLKA	CLKB	Input	This input accepts the clock signal to which read and write operations are synchronized. All associated port inputs are required to meet setup times with respect to the clock signal's active edge. The data output bus responds after a clock-to-out delay referenced to the clock signal's active edge.

Port Aspect Ratios

On a given port, it is possible to select a number of different possible widths ($w - p$) for the DI/DO buses as shown in Table 14. These two buses always have the same width. This data bus width selection is independent for each port. If the data bus width of Port A differs from that of Port B, the Block RAM automatically performs a bus-matching function. When data are written to a port with a narrow bus, then read from a port with a wide bus, the latter port will effectively combine "narrow" words to form "wide" words. Similarly, when data are written into a port with a wide bus, then read from a port with a narrow bus, the latter port will divide "wide" words to form "narrow" words. When the data bus width is eight bits or greater, extra parity bits become available. The width of the total data path (w) is the sum of the DI/DO bus width and any parity bits (p).

The width selection made for the DI/DO bus determines the number of address lines according to the relationship expressed below:

$$r = 14 - [\log(w-p)/\log(2)] \qquad \textit{Equation 1}$$

In turn, the number of address lines delimits the total number (n) of addressable locations or depth according to the following equation:

$$n = 2^r \qquad \textit{Equation 2}$$

The product of w and n yields the total block RAM capacity. Equation 1 and Equation 2 show that as the data bus width increases, the number of address lines along with the number of addressable memory locations decreases. Using the permissible DI/DO bus widths as inputs to these equations provides the bus width and memory capacity measures shown in Table 14.

Table 14: **Port Aspect Ratios for Port A or B**

DI/DO Bus Width (w – p Bits)	DIP/DOP Bus Width (p Bits)	Total Data Path Width (w Bits)	ADDR Bus Width (r Bits)	No. of Addressable Locations (n)	Block RAM Capacity (Bits)
1	0	1	14	16,384	16,384
2	0	2	13	8,192	16,384
4	0	4	12	4,096	16,384
8	1	9	11	2,048	18,432
16	2	18	10	1,024	18,432
32	4	36	9	512	18,432

Block RAM Data Operations

Writing data to and accessing data from the block RAM are synchronous operations that take place independently on each of the two ports.

The waveforms for the write operation are shown in the top half of the Figure 15, Figure 16, and Figure 17. When the WE and EN signals enable the active edge of CLK, data at the DI input bus is written to the block RAM location addressed by the ADDR lines.

There are a number of different conditions under which data can be accessed at the DO outputs. Basic data access always occurs when the WE input is inactive. Under this condition, data stored in the memory location addressed by the ADDR lines passes through a transparent output latch to the DO outputs. The timing for basic data access is shown in the portions of Figure 15, Figure 16, and Figure 17 during which WE is Low.

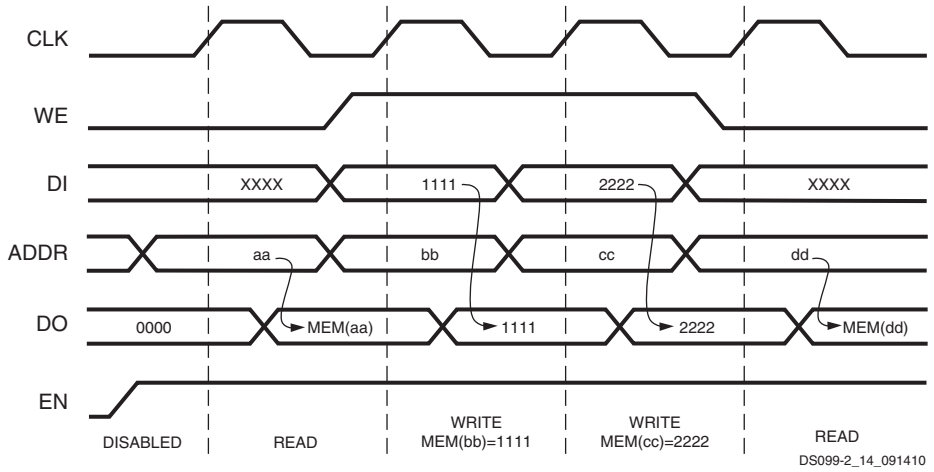

Figure 15: **Waveforms of Block RAM Data Operations with WRITE_FIRST Selected**

Data can also be accessed on the DO outputs when asserting the WE input. This is accomplished using two different attributes:

Choosing the WRITE_FIRST attribute, data is written to the addressed memory location on an enabled active CLK edge and is also passed to the DO outputs. WRITE_FIRST timing is shown in the portion of Figure 15 during which WE is High.

Choosing the READ_FIRST attribute, data already stored in the addressed location pass to the DO outputs before that location is overwritten with new data from the DI inputs on an enabled active CLK edge. READ_FIRST timing is shown in the portion of Figure 16 during which WE is High.

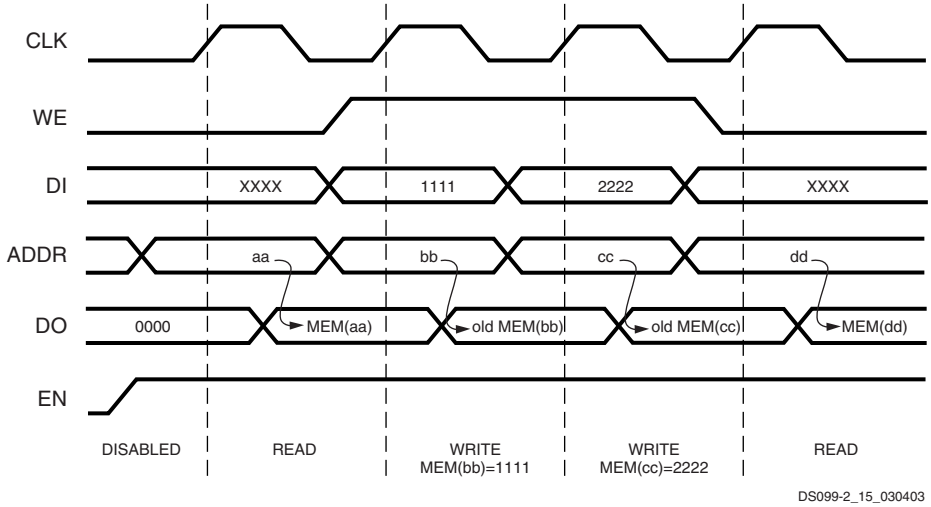

Figure 16: **Waveforms of Block RAM Data Operations with READ_FIRST Selected**

Choosing a third attribute called NO_CHANGE puts the DO outputs in a latched state when asserting WE. Under this condition, the DO outputs will retain the data driven just before WE was asserted. NO_CHANGE timing is shown in the portion of Figure 17 during which WE is High.

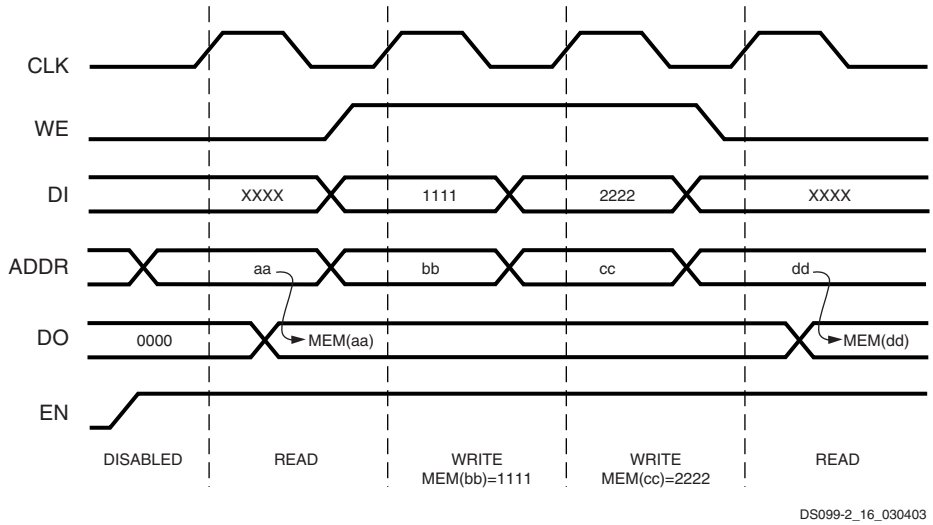

Figure 17: **Waveforms of Block RAM Data Operations with NO_CHANGE Selected**

Dedicated Multipliers

All Spartan-3 devices provide embedded multipliers that accept two 18-bit words as inputs to produce a 36-bit product. This section provides an introduction to multipliers. For further details, refer to the chapter entitled “Using Embedded Multipliers” in UG331.

The input buses to the multiplier accept data in two’s-complement form (either 18-bit signed or 17-bit unsigned). One such multiplier is matched to each block RAM on the die. The close physical proximity of the two ensures efficient data handling. Cascading multipliers permits multiplicands more than three in number as well as wider than 18-bits. The multiplier is placed in a design using one of two primitives: an asynchronous version called MULT18X18 and a version with a register called MULT18X18S, as shown in Figure 18. The signals for these primitives are defined in Table 15.

The CORE Generator system produces multipliers based on these primitives that can be configured to suit a wide range of requirements.

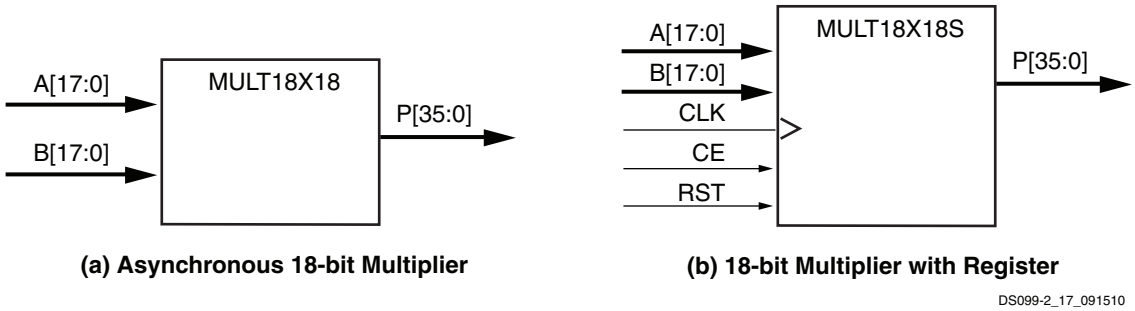

Figure 18: **Embedded Multiplier Primitives**

Table 15: **Embedded Multiplier Primitives Descriptions**

Signal Name	Direction	Function
A[17:0]	Input	Apply one 18-bit multiplicand to these inputs. The MULT18X18S primitive requires a setup time before the enabled rising edge of CLK.
B[17:0]	Input	Apply the other 18-bit multiplicand to these inputs. The MULT18X18S primitive requires a setup time before the enabled rising edge of CLK.
P[35:0]	Output	The output on the P bus is a 36-bit product of the multiplicands A and B. In the case of the MULT18X18S primitive, an enabled rising CLK edge updates the P bus.
CLK	Input(1)	CLK is only an input to the MULT18X18S primitive. The clock signal applied to this input, when enabled by CE, updates the output register that drives the P bus.
CE	Input(1)	CE is only an input to the MULT18X18S primitive. Enable for the CLK signal. Asserting this input enables the CLK signal to update the P bus.
RST	Input(1)	RST is only an input to the MULT18X18S primitive. Asserting this input resets the output register on an enabled, rising CLK edge, forcing the P bus to all zeroes.

Notes:

1. The control signals CLK, CE and RST have the option of inverted polarity.

Digital Clock Manager (DCM)

Spartan-3 devices provide flexible, complete control over clock frequency, phase shift and skew through the use of the DCM feature. To accomplish this, the DCM employs a Delay-Locked Loop (DLL), a fully digital control system that uses feedback to maintain clock signal characteristics with a high degree of precision despite normal variations in operating temperature and voltage. This section provides a fundamental description of the DCM. For further information, refer to the chapter entitled “Using Digital Clock Managers” in UG331.

Each member of the Spartan-3 family has four DCMs, except the smallest, the XC3S50, which has two DCMs. The DCMs are located at the ends of the outermost Block RAM column(s). See Figure 1, page 3. The Digital Clock Manager is placed in a design as the “DCM” primitive.

The DCM supports three major functions:

- **Clock-skew Elimination:** Clock skew describes the extent to which clock signals may, under normal circumstances, deviate from zero-phase alignment. It occurs when slight differences in path delays cause the clock signal to arrive at different points on the die at different times. This clock skew can increase set-up and hold time requirements as well as clock-to-out time, which may be undesirable in applications operating at a high frequency, when timing is critical. The DCM eliminates clock skew by aligning the output clock signal it generates with another version of the clock signal that is fed back. As a result, the two clock signals establish a zero-phase relationship. This effectively cancels out clock distribution delays that may lie in the signal path leading from the clock output of the DCM to its feedback input.
- **Frequency Synthesis:** Provided with an input clock signal, the DCM can generate a wide range of different output clock frequencies. This is accomplished by either multiplying and/or dividing the frequency of the input clock signal by any of several different factors.

- **Phase Shifting:** The DCM provides the ability to shift the phase of all its output clock signals with respect to its input clock signal.

The DCM has four functional components: the Delay-Locked Loop (DLL), the Digital Frequency Synthesizer (DFS), the Phase Shifter (PS), and the Status Logic. Each component has its associated signals, as shown in Figure 19.

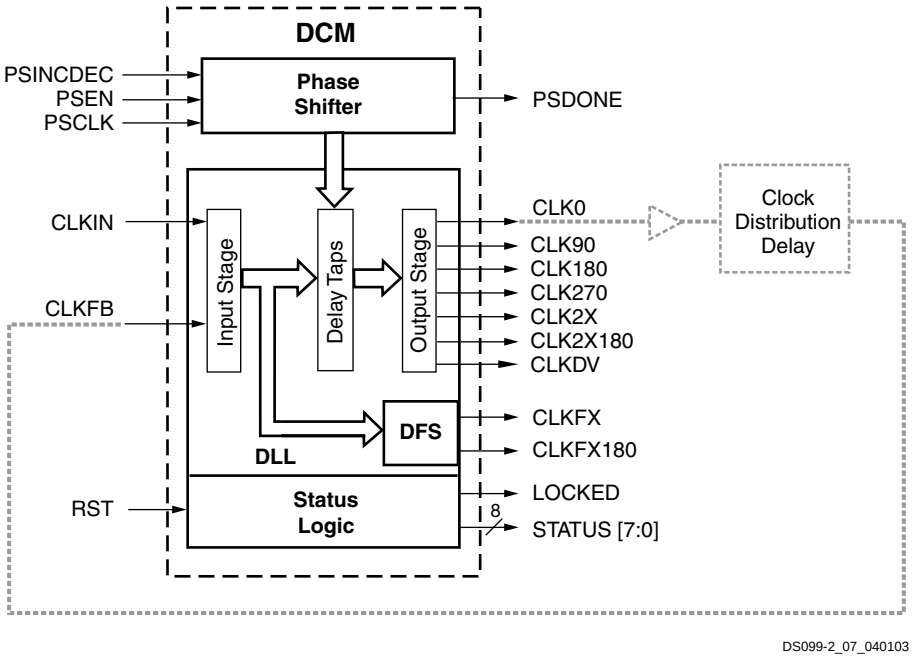

Figure 19: **DCM Functional Blocks and Associated Signals**

Delay-Locked Loop (DLL)

The most basic function of the DLL component is to eliminate clock skew. The main signal path of the DLL consists of an input stage, followed by a series of discrete delay elements or *taps,* which in turn leads to an output stage. This path together with logic for phase detection and control forms a system complete with feedback as shown in Figure 20.

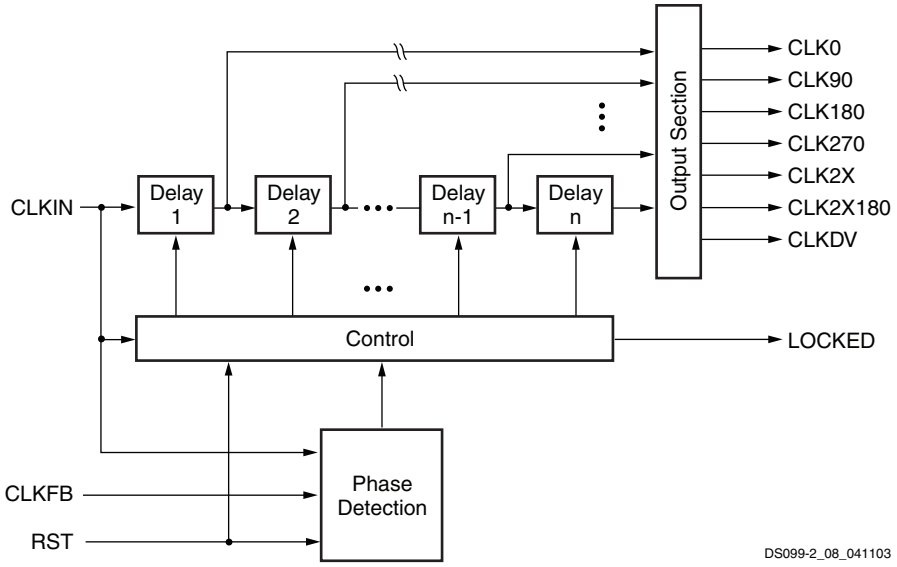

Figure 20: **Simplified Functional Diagram of DLL**

The DLL component has two clock inputs, CLKIN and CLKFB, as well as seven clock outputs, CLK0, CLK90, CLK180, CLK270, CLK2X, CLK2X180, and CLKDV as described in Table 16. The clock outputs drive simultaneously; however, the High Frequency mode only supports a subset of the outputs available in the Low Frequency mode. See DLL Frequency Modes, page 35. Signals that initialize and report the state of the DLL are discussed in The Status Logic Component, page 41.

Table 16: **DLL Signals**

Signal	Direction	Description	Mode Support	
			Low Frequency	High Frequency
CLKIN	Input	Accepts original clock signal.	Yes	Yes
CLKFB	Input	Accepts either CLK0 or CLK2X as feed back signal. (Set CLK_FEEDBACK attribute accordingly).	Yes	Yes
CLK0	Output	Generates clock signal with same frequency and phase as CLKIN.	Yes	Yes
CLK90	Output	Generates clock signal with same frequency as CLKIN, only phase-shifted 90°.	Yes	No
CLK180	Output	Generates clock signal with same frequency as CLKIN, only phase-shifted 180°.	Yes	Yes
CLK270	Output	Generates clock signal with same frequency as CLKIN, only phase-shifted 270°.	Yes	No
CLK2X	Output	Generates clock signal with same phase as CLKIN, only twice the frequency.	Yes	No
CLK2X180	Output	Generates clock signal with twice the frequency of CLKIN, phase-shifted 180° with respect to CLKIN.	Yes	No
CLKDV	Output	Divides the CLKIN frequency by CLKDV_DIVIDE value to generate lower frequency clock signal that is phase-aligned to CLKIN.	Yes	Yes

The clock signal supplied to the CLKIN input serves as a reference waveform, with which the DLL seeks to align the feedback signal at the CLKFB input. When eliminating clock skew, the common approach to using the DLL is as follows: The CLK0 signal is passed through the clock distribution network to all the registers it synchronizes. These registers are either internal or external to the FPGA. After passing through the clock distribution network, the clock signal returns to the DLL via a feedback line called CLKFB. The control block inside the DLL measures the phase error between CLKFB and CLKIN. This phase error is a measure of the clock skew that the clock distribution network introduces. The control block activates the appropriate number of delay elements to cancel out the clock skew. Once the DLL has brought the CLK0 signal in phase with the CLKIN signal, it asserts the LOCKED output, indicating a “lock” on to the CLKIN signal.

DLL Attributes and Related Functions

A number of different functional options can be set for the DLL component through the use of the attributes described in Table 17. Each attribute is described in detail in the sections that follow:

Table 17: **DLL Attributes**

Attribute	Description	Values
CLK_FEEDBACK	Chooses either the CLK0 or CLK2X output to drive the CLKFB input	NONE, 1X, 2X
DLL_FREQUENCY_MODE	Chooses between High Frequency and Low Frequency modes	LOW, HIGH
CLKIN_DIVIDE_BY_2	Halves the frequency of the CLKIN signal just as it enters the DCM	TRUE, FALSE
CLKDV_DIVIDE	Selects constant used to divide the CLKIN input frequency to generate the CLKDV output frequency	1.5, 2, 2.5, 3, 3.5, 4, 4.5, 5, 5.5, 6.0, 6.5, 7.0, 7.5, 8, 9, 10, 11, 12, 13, 14, 15, and 16.
DUTY_CYCLE_CORRECTION	Enables 50% duty cycle correction for the CLK0, CLK90, CLK180, and CLK270 outputs	TRUE, FALSE

DLL Clock Input Connections

An external clock source enters the FPGA using a Global Clock Input Buffer (IBUFG), which directly accesses the global clock network or an Input Buffer (IBUF). Clock signals within the FPGA drive a global clock net using a Global Clock Multiplexer Buffer (BUFGMUX). The global clock net connects directly to the CLKIN input. The internal and external connections are shown in the [a] and [c] sections, respectively, of Figure 21. A differential clock (e.g., LVDS) can serve as an input to CLKIN.

DLL Clock Output and Feedback Connections

As many as four of the nine DCM clock outputs can simultaneously drive the four BUFGMUX buffers on the same die edge (top or bottom). All DCM clock outputs can simultaneously drive general routing resources, including interconnect leading to OBUF buffers.

The feedback loop is essential for DLL operation and is established by driving the CLKFB input with either the CLK0 or the CLK2X signal so that any undesirable clock distribution delay is included in the loop. It is possible to use either of these two signals for synchronizing any of the seven DLL outputs: CLK0, CLK90, CLK180, CLK270, CLKDV, CLK2X, or CLK2X180. The value assigned to the CLK_FEEDBACK attribute must agree with the physical feedback connection: a value of 1X for the CLK0 case, 2X for the CLK2X case. If the DCM is used in an application that does not require the DLL—i.e., only the DFS is used—then there is no feedback loop so CLK_FEEDBACK is set to NONE.

CLK2X feedback is only supported on all mask revision ‘E’ and later devices (see Mask and Fab Revisions, page 58), on devices with the "GQ" fabrication code, and on all versions of the XC3S50 and XC3S1000.

There are two basic cases that determine how to connect the DLL clock outputs and feedback connections: on-chip synchronization and off-chip synchronization, which are illustrated in Figure 21.

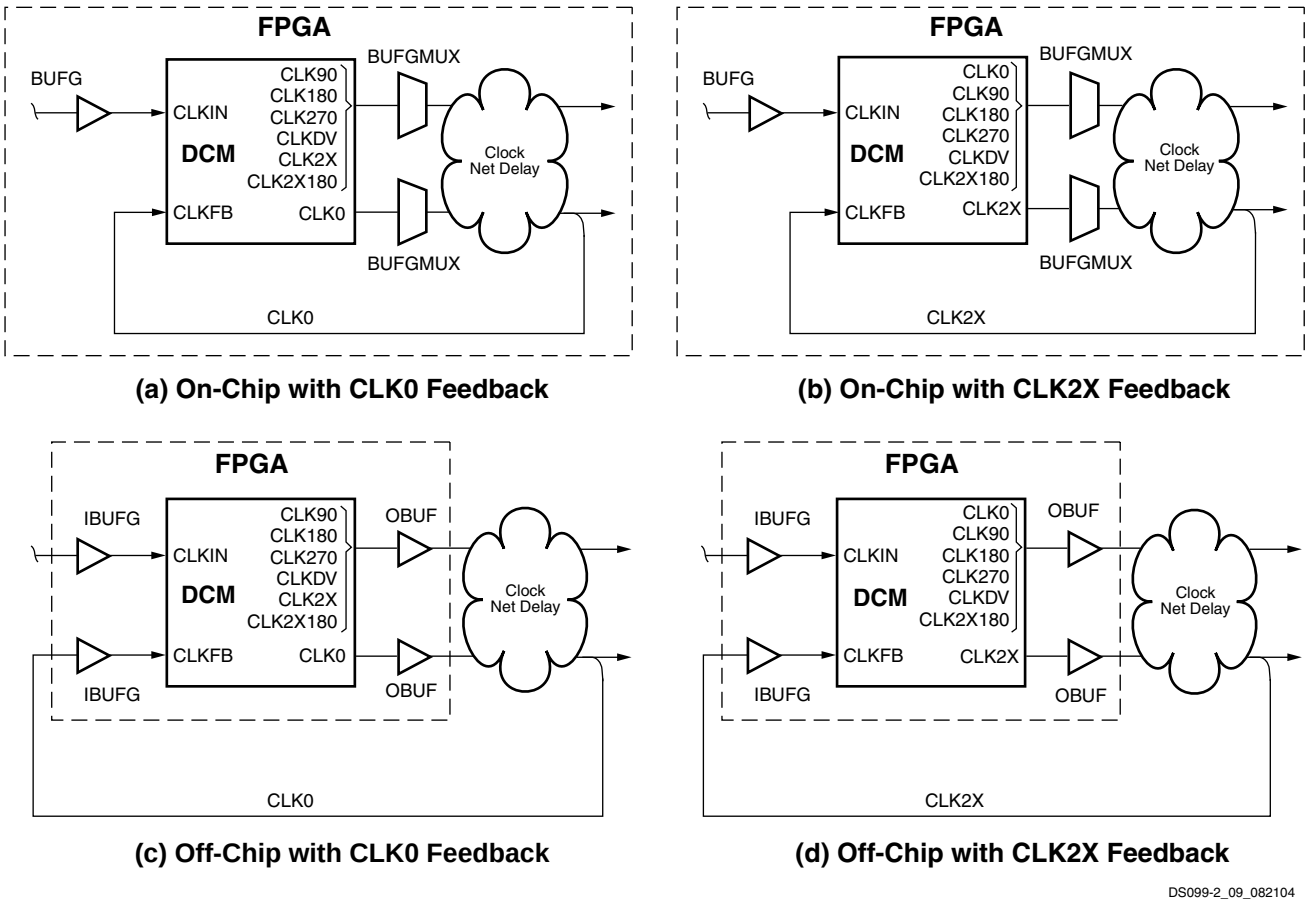

Notes:

1. In the Low Frequency mode, all seven DLL outputs are available. In the High Frequency mode, only the CLK0, CLK180, and CLKDV outputs are available.

Figure 21: **Input Clock, Output Clock, and Feedback Connections for the DLL**

In the on-chip synchronization case (the [a] and [b] sections of Figure 21), it is possible to connect any of the DLL's seven output clock signals through general routing resources to the FPGA's internal registers. Either a Global Clock Buffer (BUFG) or a BUFGMUX affords access to the global clock network. As shown in the [a] section of Figure 21, the feedback loop is created by routing CLK0 (or CLK2X, in the [b] section) to a global clock net, which in turn drives the CLKFB input.

In the off-chip synchronization case (the [c] and [d] sections of Figure 21), CLK0 (or CLK2X) plus any of the DLL's other output clock signals exit the FPGA using output buffers (OBUF) to drive an external clock network plus registers on the board. As shown in the [c] section of Figure 21, the feedback loop is formed by feeding CLK0 (or CLK2X, in the [d] section) back into the FPGA using an IBUFG, which directly accesses the global clock network, or an IBUF. Then, the global clock net is connected directly to the CLKFB input.

DLL Frequency Modes

The DLL supports two distinct operating modes, High Frequency and Low Frequency, with each specified over a different clock frequency range. The DLL_FREQUENCY_MODE attribute chooses between the two modes. When the attribute is set to LOW, the Low Frequency mode permits all seven DLL clock outputs to operate over a low-to-moderate frequency range. When the attribute is set to HIGH, the High Frequency mode allows the CLK0, CLK180 and CLKDV outputs to operate at the highest possible frequencies. The remaining DLL clock outputs are not available for use in High Frequency mode.

Accommodating High Input Frequencies

If the frequency of the CLKIN signal is high such that it exceeds the maximum permitted, divide it down to an acceptable value using the CLKIN_DIVIDE_BY_2 attribute. When this attribute is set to TRUE, the CLKIN frequency is divided by a factor of two just as it enters the DCM.

Coarse Phase Shift Outputs of the DLL Component

In addition to CLK0 for zero-phase alignment to the CLKIN signal, the DLL also provides the CLK90, CLK180 and CLK270 outputs for 90°, 180° and 270° phase-shifted signals, respectively. These signals are described in Table 16, page 33. Their relative timing in the Low Frequency Mode is shown in Figure 22, page 37. The CLK90, CLK180 and CLK270 outputs are not available when operating in the High Frequency mode. (See the description of the DLL_FREQUENCY_MODE attribute in Table 17, page 33.) For control in finer increments than 90°, see Phase Shifter (PS), page 39.

Basic Frequency Synthesis Outputs of the DLL Component

The DLL component provides basic options for frequency multiplication and division in addition to the more flexible synthesis capability of the DFS component, described in a later section. These operations result in output clock signals with frequencies that are either a fraction (for division) or a multiple (for multiplication) of the incoming clock frequency. The CLK2X output produces an in-phase signal that is twice the frequency of CLKIN. The CLK2X180 output also doubles the frequency, but is 180° out-of-phase with respect to CLKIN. The CLKDIV output generates a clock frequency that is a predetermined fraction of the CLKIN frequency. The CLKDV_DIVIDE attribute determines the factor used to divide the CLKIN frequency. The attribute can be set to various values as described in Table 17. The basic frequency synthesis outputs are described in Table 16. Their relative timing in the Low Frequency Mode is shown in Figure 22.

The CLK2X and CLK2X180 outputs are not available when operating in the High Frequency mode. See the description of the DLL_FREQUENCY_MODE attribute in Table 18.

Duty Cycle Correction of DLL Clock Outputs

The CLK2X[1], CLK2X180, and CLKDV[2] output signals ordinarily exhibit a 50% duty cycle—even if the incoming CLKIN signal has a different duty cycle. A 50% duty cycle means that the High and Low times of each clock cycle are equal. The DUTY_CYCLE_CORRECTION attribute determines whether or not duty cycle correction is applied to the CLK0, CLK90, CLK180 and CLK270 outputs. If DUTY_CYCLE_CORRECTION is set to TRUE, then the duty cycle of these four outputs is corrected to 50%. If DUTY_CYCLE_CORRECTION is set to FALSE, then these outputs exhibit the same duty cycle as the CLKIN signal. Figure 22 compares the characteristics of the DLL's output signals to those of the CLKIN signal.

1. The CLK2X output generates a 25% duty cycle clock at the same frequency as the CLKIN signal until the DLL has achieved lock.
2. The duty cycle of the CLKDV outputs may differ somewhat from 50% (i.e., the signal will be High for less than 50% of the period) when the CLKDV_DIVIDE attribute is set to a non-integer value *and* the DLL is operating in the High Frequency mode.

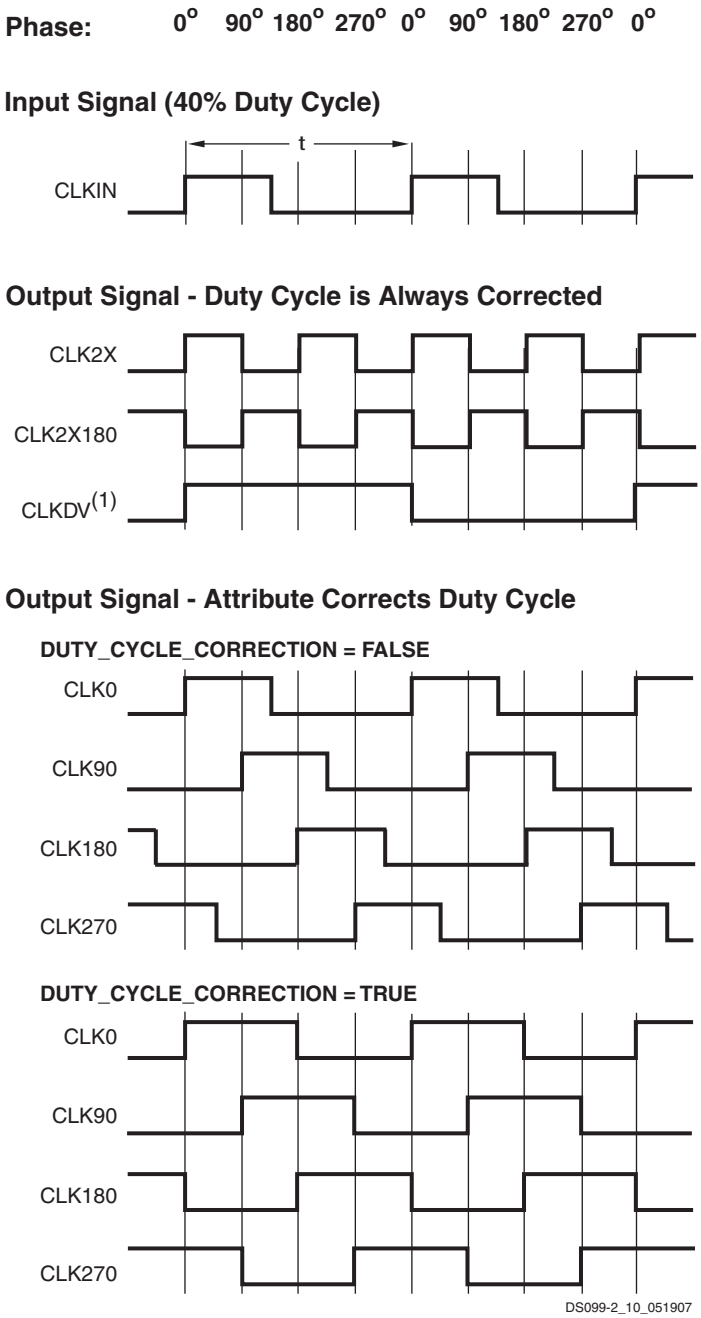

Figure 22: **Characteristics of the DLL Clock Outputs**

Digital Frequency Synthesizer (DFS)

The DFS component generates clock signals the frequency of which is a product of the clock frequency at the CLKIN input and a ratio of two user-determined integers. Because of the wide range of possible output frequencies such a ratio permits, the DFS feature provides still further flexibility than the DLL's basic synthesis options as described in the preceding section. The DFS component's two dedicated outputs, CLKFX and CLKFX180, are defined in Table 19.

The signal at the CLKFX180 output is essentially an inversion of the CLKFX signal. These two outputs always exhibit a 50% duty cycle. This is true even when the CLKIN signal does not. These DFS clock outputs are driven at the same time as the DLL's seven clock outputs.

The numerator of the ratio is the integer value assigned to the attribute CLKFX_MULTIPLY and the denominator is the integer value assigned to the attribute CLKFX_DIVIDE. These attributes are described in Table 18.

The output frequency (f_{CLKFX}) can be expressed as a function of the incoming clock frequency (f_{CLKIN}) as follows:

$$f_{CLKFX} = f_{CLKIN}(CLKFX_MULTIPLY/CLKFX_DIVIDE) \quad \textit{Equation 3}$$

Regarding the two attributes, it is possible to assign any combination of integer values, provided that two conditions are met:

- The two values fall within their corresponding ranges, as specified in Table 18.
- The f_{CLKFX} frequency calculated from the above expression accords with the DCM's operating frequency specifications.

For example, if CLKFX_MULTIPLY = 5 and CLKFX_DIVIDE = 3, then the frequency of the output clock signal would be 5/3 that of the input clock signal.

DFS Frequency Modes

The DFS supports two operating modes, High Frequency and Low Frequency, with each specified over a different clock frequency range. The DFS_FREQUENCY_MODE attribute chooses between the two modes. When the attribute is set to LOW, the Low Frequency mode permits the two DFS outputs to operate over a low-to-moderate frequency range. When the attribute is set to HIGH, the High Frequency mode allows both these outputs to operate at the highest possible frequencies.

DFS With or Without the DLL

The DFS component can be used with or without the DLL component:

Without the DLL, the DFS component multiplies or divides the CLKIN signal frequency according to the respective CLKFX_MULTIPLY and CLKFX_DIVIDE values, generating a clock with the new target frequency on the CLKFX and CLKFX180 outputs. Though classified as belonging to the DLL component, the CLKIN input is shared with the DFS component. This case does not employ feedback loop; therefore, it cannot correct for clock distribution delay.

With the DLL, the DFS operates as described in the preceding case, only with the additional benefit of eliminating the clock distribution delay. In this case, a feedback loop from the CLK0 output to the CLKFB input must be present.

The DLL and DFS components work together to achieve this phase correction as follows: Given values for the CLKFX_MULTIPLY and CLKFX_DIVIDE attributes, the DLL selects the delay element for which the output clock edge coincides with the input clock edge whenever mathematically possible. For example, when CLKFX_MULTIPLY = 5 and CLKFX_DIVIDE = 3, the input and output clock edges will coincide every three input periods, which is equivalent in time to five output periods.

Smaller CLKFX_MULTIPLY and CLKFX_DIVIDE values achieve faster lock times. With no factors common to the two attributes, alignment will occur once with every number of cycles equal to the CLKFX_DIVIDE value. Therefore, it is recommended that the user reduce these values by factoring wherever possible. For example, given CLKFX_MULTIPLY = 9 and CLKFX_DIVIDE = 6, removing a factor of three yields CLKFX_MULTIPLY = 3 and CLKFX_DIVIDE = 2. While both value-pairs will result in the multiplication of clock frequency by 3/2, the latter value-pair will enable the DLL to lock more quickly.

Table 18: **DFS Attributes**

Attribute	Description	Values
DFS_FREQUENCY_MODE	Chooses between High Frequency and Low Frequency modes	Low, High
CLKFX_MULTIPLY	Frequency multiplier constant	Integer from 2 to 32
CLKFX_DIVIDE	Frequency divisor constant	Integer from 1 to 32

Table 19: **DFS Signals**

Signal	Direction	Description
CLKFX	Output	Multiplies the CLKIN frequency by the attribute-value ratio (CLKFX_MULTIPLY/CLKFX_DIVIDE) to generate a clock signal with a new target frequency.
CLKFX180	Output	Generates a clock signal with same frequency as CLKFX, only shifted 180° out-of-phase.

DFS Clock Output Connections

There are two basic cases that determine how to connect the DFS clock outputs: on-chip and off-chip, which are illustrated in sections [a] and [c], respectively, of Figure 21. This is similar to what has already been described for the DLL component. See DLL Clock Output and Feedback Connections, page 34.

In the on-chip case, it is possible to connect either of the DFS's two output clock signals through general routing resources to the FPGA's internal registers. Either a Global Clock Buffer (BUFG) or a BUFGMUX affords access to the global clock network. The optional feedback loop is formed in this way, routing CLK0 to a global clock net, which in turn drives the CLKFB input.

In the off-chip case, the DFS's two output clock signals, plus CLK0 for an optional feedback loop, can exit the FPGA using output buffers (OBUF) to drive a clock network plus registers on the board. The feedback loop is formed by feeding the CLK0 signal back into the FPGA using an IBUFG, which directly accesses the global clock network, or an IBUF. Then, the global clock net is connected directly to the CLKFB input.

Phase Shifter (PS)

The DCM provides two approaches to controlling the phase of a DCM clock output signal relative to the CLKIN signal: First, there are nine clock outputs that employ the DLL to achieve a desired phase relationship: CLK0, CLK90, CLK180, CLK270, CLK2X, CLK2X180, CLKDV CLKFX, and CLKFX180. These outputs afford "coarse" phase control.

The second approach uses the PS component described in this section to provide a still finer degree of control. The PS component is only available when the DLL is operating in its low-frequency mode. The PS component phase shifts the DCM output clocks by introducing a "fine phase shift" (T_{PS}) between the CLKFB and CLKIN signals inside the DLL component. The user can control this fine phase shift down to a resolution of 1/256 of a CLKIN cycle or one tap delay (DCM_TAP), whichever is greater. When in use, the PS component shifts the phase of all nine DCM clock output signals together. If the PS component is used together with a DCM clock output such as the CLK90, CLK180, CLK270, CLK2X180 and CLKFX180, then the fine phase shift of the former gets added to the coarse phase shift of the latter.

PS Component Enabling and Mode Selection

The CLKOUT_PHASE_SHIFT attribute enables the PS component for use in addition to selecting between two operating modes. As described in Table 20, this attribute has three possible values: NONE, FIXED and VARIABLE. When CLKOUT_PHASE_SHIFT is set to NONE, the PS component is disabled and its inputs, PSEN, PSCLK, and PSINCDEC, must be tied to GND. The set of waveforms in section [a] of Figure 22 shows the disabled case, where the DLL maintains a zero-phase alignment of signals CLKFB and CLKIN upon which the PS component has no effect. The PS component is enabled by setting the attribute to either the FIXED or VARIABLE values, which select the Fixed Phase mode and the Variable Phase mode, respectively. These two modes are described in the sections that follow

Determining the Fine Phase Shift

The user controls the phase shift of CLKFB relative to CLKIN by setting and/or adjusting the value of the PHASE_SHIFT attribute. This value must be an integer ranging from –255 to +255. The PS component uses this value to calculate the desired fine phase shift (T_{PS}) as a fraction of the CLKIN period (T_{CLKIN}). Given values for PHASE-SHIFT and T_{CLKIN}, it is possible to calculate T_{PS} as follows:

$$T_{PS} = T_{CLKIN}(\text{PHASE_SHIFT}/256) \qquad \textit{Equation 4}$$

Both the Fixed Phase and Variable Phase operating modes employ this calculation. If the PHASE_SHIFT value is zero, then CLKFB and CLKIN will be in phase, the same as when the PS component is disabled. When the PHASE_SHIFT value is positive, the CLKFB signal will be shifted later in time with respect to CLKIN. If the attribute value is negative, the CLKFB signal will be shifted earlier in time with respect to CLKIN.

The Fixed Phase Mode

This mode fixes the desired fine phase shift to a fraction of the T_{CLKIN}, as determined by Equation 4 and its user-selected PHASE_SHIFT value P. The set of waveforms insection [b] of Figure 22 illustrates the relationship between CLKFB and CLKIN in the Fixed Phase mode. In the Fixed Phase mode, the PSEN, PSCLK and PSINCDEC inputs are not used and must be tied to GND. Fixed phase shift requires ISE software version 10.1.03 or later.

Table 20: **PS Attributes**

Attribute	Description	Values
CLKOUT_PHASE_SHIFT	Disables PS component or chooses between Fixed Phase and Variable Phase modes.	NONE, FIXED, VARIABLE
PHASE_SHIFT	Determines size and direction of initial fine phase shift.	Integers from –255 to +255[(1)]

Notes:

1. The practical range of values will be less when T_{CLKIN} > FINE_SHIFT_RANGE in the Fixed Phase mode, also when T_{CLKIN} > (FINE_SHIFT_RANGE)/2 in the Variable Phase mode. the FINE_SHIFT_RANGE represents the sum total delay of all taps.

The Variable Phase Mode

The "Variable Phase" mode dynamically adjusts the fine phase shift over time using three inputs to the PS component, namely PSEN, PSCLK and PSINCDEC, as defined in Table 21.

After device configuration, the PS component initially determines T_{PS} by evaluating Equation (4) for the value assigned to the PHASE_SHIFT attribute. Then to dynamically adjust that phase shift, use the three PS inputs to increase or decrease the fine phase shift.

PSINCDEC is synchronized to the PSCLK clock signal, which is enabled by asserting PSEN. It is possible to drive the PSCLK input with the CLKIN signal or any other clock signal. A request for phase adjustment is entered as follows: For each PSCLK cycle that PSINCDEC is High, the PS component adds 1/256 of a CLKIN cycle to T_{PS}. Similarly, for each enabled PSCLK cycle that PSINCDEC is Low, the PS component subtracts 1/256 of a CLKIN cycle from T_{PS}. The phase adjustment may require as many as 100 CLKIN cycles plus three PSCLK cycles to take effect, at which point the output PSDONE goes High for one PSCLK cycle. This pulse indicates that the PS component has finished the present adjustment and is now ready for the next request. Asserting the Reset (RST) input, returns T_{PS} to its original shift time, as determined by the PHASE_SHIFT attribute value. The set of waveforms in section [c] of Figure 23, page 41 illustrates the relationship between CLKFB and CLKIN in the Variable Phase mode.

Table 21: **Signals for Variable Phase Mode**

Signal	Direction	Description
PSEN[(1)]	Input	Enables PSCLK for variable phase adjustment.
PSCLK[(1)]	Input	Clock to synchronize phase shift adjustment.
PSINCDEC[(1)]	Input	Chooses between increment and decrement for phase adjustment. It is synchronized to the PSCLK signal.
PSDONE	Output	Goes High to indicate that present phase adjustment is complete and PS component is ready for next phase adjustment request. It is synchronized to the PSCLK signal.

Notes:

1. It is possible to program this input for either a true or inverted polarity

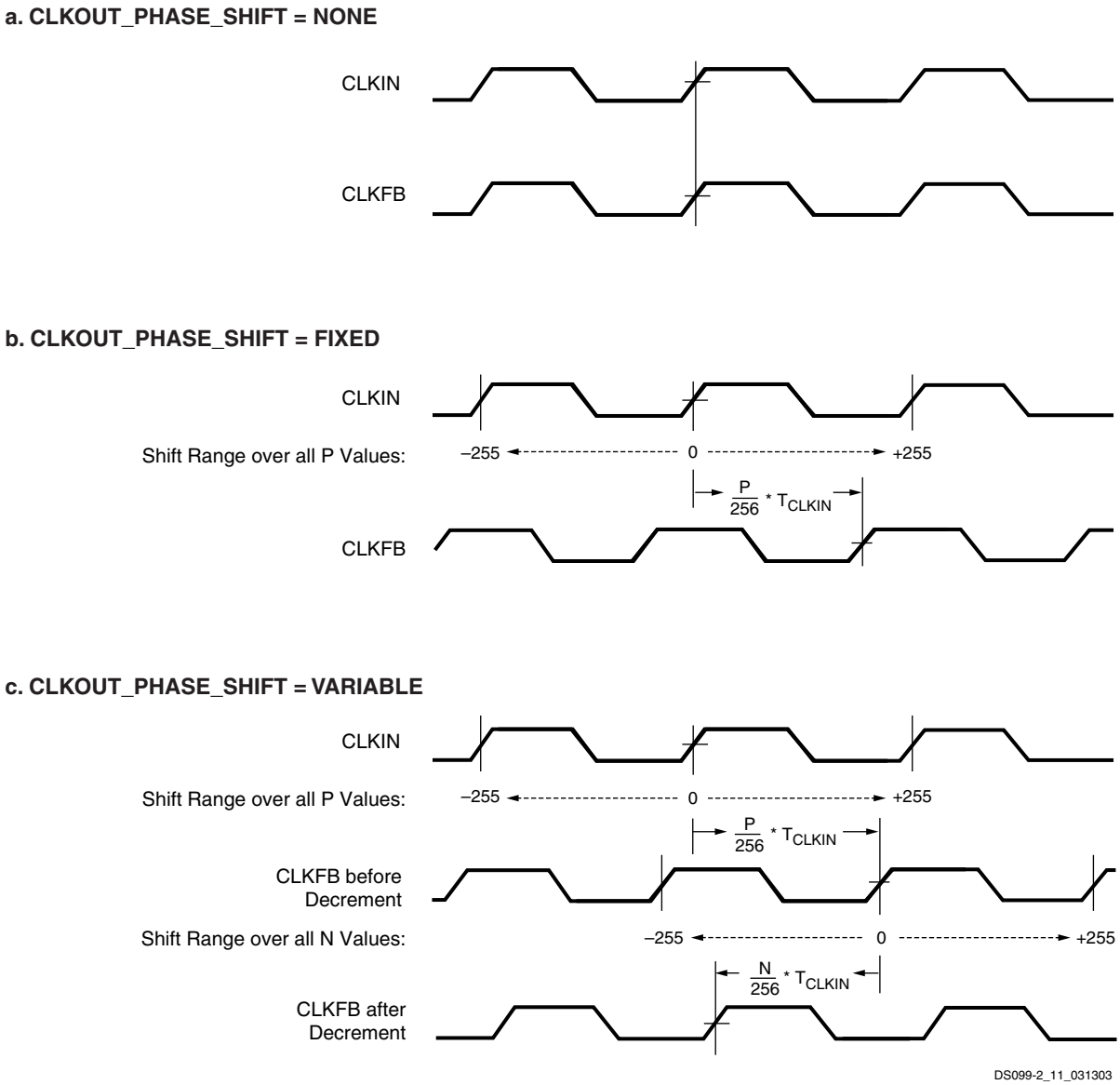

Notes:

1. P represents the integer value ranging from –255 to +255 to which the PHASE_SHIFT attribute is assigned.
2. N is an integer value ranging from –255 to +255 that represents the net phase shift effect from a series of increment and/or decrement operations.
   N = {Total number of increments} – {Total number of decrements}
   A positive value for N indicates a net increment; a negative value indicates a net decrement.

Figure 23: **Phase Shifter Waveforms**

The Status Logic Component

The Status Logic component not only reports on the state of the DCM but also provides a means of resetting the DCM to an initial known state. The signals associated with the Status Logic component are described in Table 22.

As a rule, the Reset (RST) input is asserted only upon configuring the device or changing the CLKIN frequency. A DCM reset does not affect attribute values (e.g., CLKFX_MULTIPLY and CLKFX_DIVIDE). If not used, RST must be tied to GND.

The eight bits of the STATUS bus are defined in Table 23.

Table 22: **Status Logic Signals**

Signal	Direction	Description
RST	Input	A High resets the entire DCM to its initial power-on state. Initializes the DLL taps for a delay of zero. Sets the LOCKED output Low. This input is asynchronous.
STATUS[7:0]	Output	The bit values on the STATUS bus provide information regarding the state of DLL and PS operation
LOCKED	Output	Indicates that the CLKIN and CLKFB signals are in phase by going High. The two signals are out-of-phase when Low.

Table 23: **DCM STATUS Bus**

Bit	Name	Description
0	Phase Shift Overflow	A value of 1 indicates a phase shift overflow when one of two conditions occurs: Incrementing (or decrementing) TPS beyond 255/256 of a CLKIN cycle. The DLL is producing its maximum possible phase shift (i.e., all delay taps are active).(1)
1	CLKIN Input Stopped Toggling	A value of 1 indicates that the CLKIN input signal is not toggling. A value of 0 indicates toggling. This bit functions only when the CLKFB input is connected.(2)
2	CLKFX/CLKFX180 Output Stopped Toggling	A value of 1 indicates that the CLKFX or CLKFX180 output signals are not toggling. A value of 0 indicates toggling. This bit functions only when using the Digital Frequency Synthesizer (DFS).
3:7	Reserved	–

Notes:

1. The DLL phase shift with all delay taps active is specified as the parameter FINE_SHIFT_RANGE.
2. If only the DFS clock outputs are used, but none of the DLL clock outputs, this bit will not go High when the CLKIN signal stops.

Table 24: **Status Attributes**

Attribute	Description	Values
STARTUP_WAIT	Delays transition from configuration to user mode until lock condition is achieved.	TRUE, FALSE

Stabilizing DCM Clocks Before User Mode

It is possible to delay the completion of device configuration until after the DLL has achieved a lock condition using the STARTUP_WAIT attribute described in Table 24. This option ensures that the FPGA does not enter user mode—i.e., begin functional operation—until all system clocks generated by the DCM are stable. In order to achieve the delay, it is necessary to set the attribute to TRUE as well as set the BitGen option LCK_cycle to one of the six cycles making up the Startup phase of configuration. The selected cycle defines the point at which configuration will halt until the LOCKED output goes High.

Global Clock Network

Spartan-3 devices have eight Global Clock inputs called GCLK0 - GCLK7. These inputs provide access to a low-capacitance, low-skew network that is well-suited to carrying high-frequency signals. The Spartan-3 FPGAs clock network is shown in Figure 23. GCLK0 through GCLK3 are located in the center of the bottom edge. GCLK4 through GCLK7 are located in the center of the top edge.

Eight Global Clock Multiplexers (also called BUFGMUX elements) are provided that accept signals from Global Clock inputs and route them to the internal clock network as well as DCMs. Four BUFGMUX elements are located in the center of the bottom edge, just above the GCLK0 - GCLK3 inputs. The remaining four BUFGMUX elements are located in the center of the top edge, just below the GCLK4 - GCLK7 inputs.

Pairs of BUFGMUX elements share global inputs, as shown in Figure 24. For example, the GCLK4 and GCLK5 inputs both potentially connect to BUFGMUX4 and BUFGMUX5 located in the upper right center. A differential clock input uses a pair of GCLK inputs to connect to a single BUFGMUX element.

Each BUFGMUX element, shown in Figure 24, is a 2-to-1 multiplexer that can receive signals from any of the four following sources:

- One of the four Global Clock inputs on the same side of the die—top or bottom—as the BUFGMUX element in use.
- Any of four nearby horizontal Double lines.
- Any of four outputs from the DCM in the right-hand quadrant that is on the same side of the die as the BUFGMUX element in use.
- Any of four outputs from the DCM in the left-hand quadrant that is on the same side of the die as the BUFGMUX element in use.

The multiplexer select line, S, chooses which of the two inputs, I0 or I1, drives the BUFGMUX's output signal, O, as described in Table 25. The switching from one clock to the other is glitchless, and done in such a way that the output High and Low times are never shorter than the shortest High or Low time of either input clock.

Table 25: **BUFGMUX Select Mechanism**

S Input	O Output
0	I0 Input
1	I1 Input

The two clock inputs can be asynchronous with regard to each other, and the S input can change at any time, except for a short setup time prior to the rising edge of the presently selected clock (I0 or I1). Violating this setup time requirement can result in an undefined runt pulse output.

The BUFG clock buffer primitive drives a single clock signal onto the clock network and is essentially the same element as a BUFGMUX, just without the clock select mechanism. Similarly, the BUFGCE primitive creates an enabled clock buffer using the BUFGMUX select mechanism.

Each BUFGMUX buffers incoming clock signals to two possible destinations:

- The vertical spine belonging to the same side of the die—top or bottom—as the BUFGMUX element in use. The two spines—top and bottom—each comprise four vertical clock lines, each running from one of the BUFGMUX elements on the same side towards the center of the die. At the center of the die, clock signals reach the eight-line horizontal spine, which spans the width of the die. In turn, the horizontal spine branches out into a subsidiary clock interconnect that accesses the CLBs.
- The clock input of either DCM on the same side of the die—top or bottom—as the BUFGMUX element in use.

Use either a BUFGMUX element or a BUFG (Global Clock Buffer) element to place a Global input in the design. For the purpose of minimizing the dynamic power dissipation of the clock network, the Xilinx development software automatically disables all clock line segments that a design does not use.

A global clock line ideally drives clock inputs on the various clocked elements within the FPGA, such as CLB or IOB flip-flops or block RAMs. A global clock line also optionally drives combinatorial inputs. However, doing so provides additional loading on the clock line that might also affect clock jitter. Ideally, drive combinatorial inputs using the signal that also drives the input to the BUFGMUX or BUFG element.

For more details, refer to the chapter entitled "Using Global Clock Resources" in UG331.

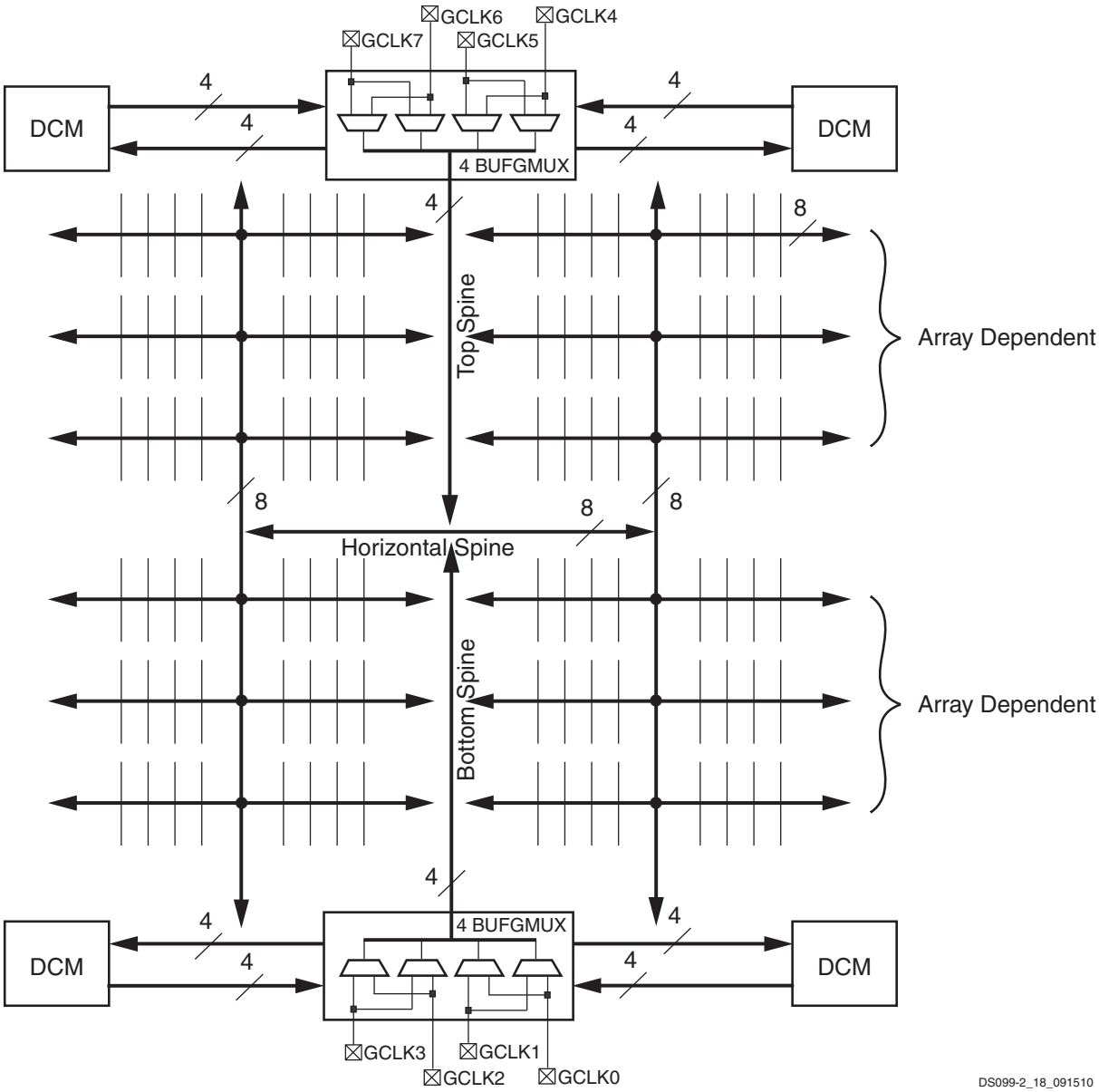

Figure 24: **Spartan-3 FPGAs Clock Network (Top View)**

Interconnect

Interconnect (or routing) passes signals among the various functional elements of Spartan-3 devices. There are four kinds of interconnect: Long lines, Hex lines, Double lines, and Direct lines.

Long lines connect to one out of every six CLBs (see section [a] of Figure 25). Because of their low capacitance, these lines are well-suited for carrying high-frequency signals with minimal loading effects (e.g. skew). If all eight Global Clock Inputs are already committed and there remain additional clock signals to be assigned, Long lines serve as a good alternative.

Hex lines connect one out of every three CLBs (see section [b] of Figure 25). These lines fall between Long lines and Double lines in terms of capability: Hex lines approach the high-frequency characteristics of Long lines at the same time, offering greater connectivity.

Double lines connect to every other CLB (see section [c] of Figure 25). Compared to the types of lines already discussed, Double lines provide a higher degree of flexibility when making connections.

Direct lines afford any CLB direct access to neighboring CLBs (see section [d] of Figure 25). These lines are most often used to conduct a signal from a "source" CLB to a Double, Hex, or Long line and then from the longer interconnect back to a Direct line accessing a "destination" CLB.

For more details, refer to the "*Using Interconnect*" chapter in UG331.

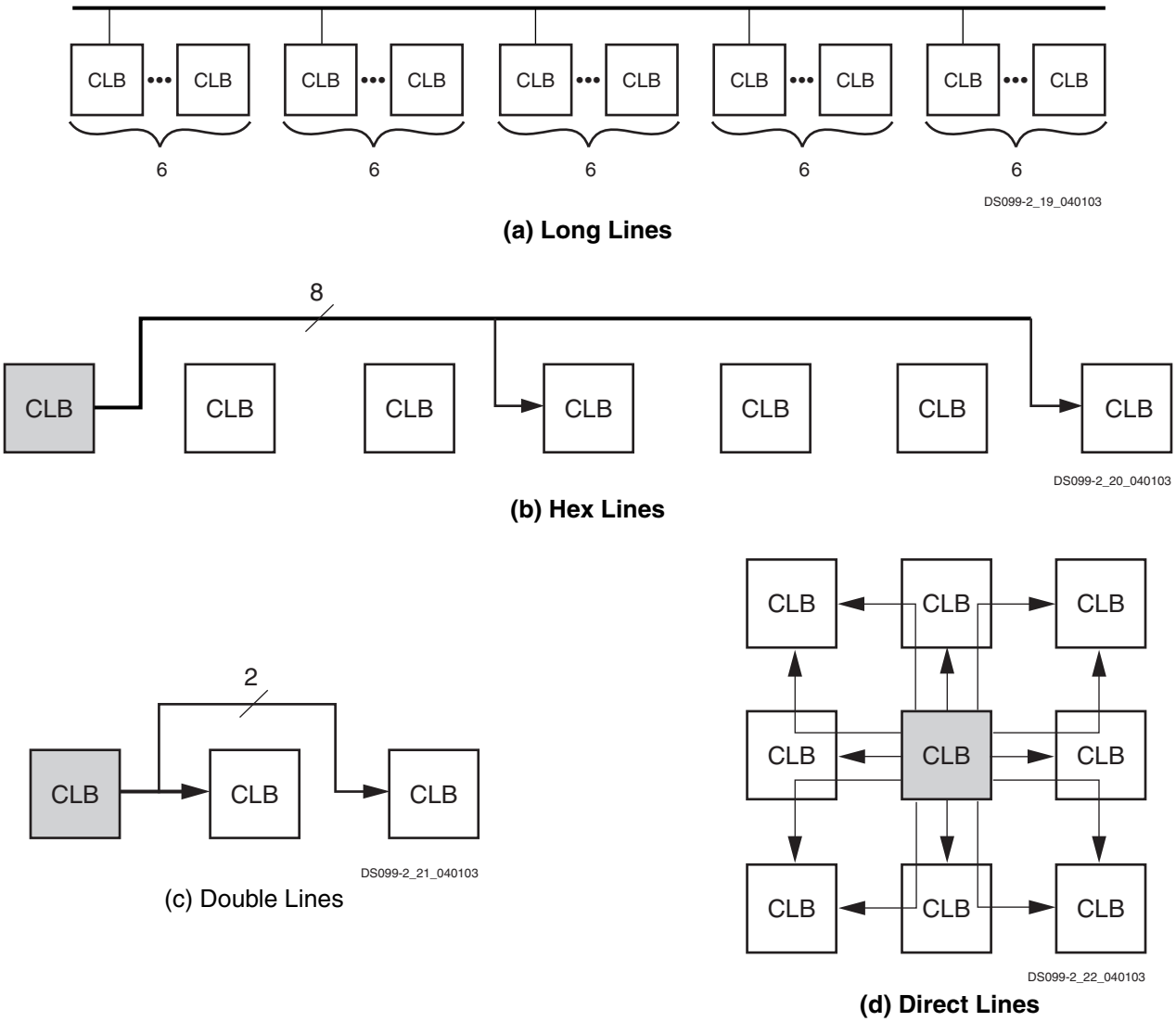

Figure 25: **Types of Interconnect**

Configuration

Spartan-3 devices are configured by loading application specific configuration data into the internal configuration memory. Configuration is carried out using a subset of the device pins, some of which are "Dedicated" to one function only, while others, indicated by the term "Dual-Purpose", can be re-used as general-purpose User I/Os once configuration is complete.

Depending on the system design, several configuration modes are supported, selectable via mode pins. The mode pins M0, M1, and M2 are Dedicated pins. The mode pin settings are shown in Table 26.

Table 26: **Spartan-3 FPGAs Configuration Mode Pin Settings**

Configuration Mode[1]	M0	M1	M2	Synchronizing Clock	Data Width	Serial DOUT[2]
Master Serial	0	0	0	CCLK Output	1	Yes
Slave Serial	1	1	1	CCLK Input	1	Yes
Master Parallel	1	1	0	CCLK Output	8	No
Slave Parallel	0	1	1	CCLK Input	8	No
JTAG	1	0	1	TCK Input	1	No

Notes:

1. The voltage levels on the M0, M1, and M2 pins select the configuration mode.
2. The daisy chain is possible only in the Serial modes when DOUT is used.

The HSWAP_EN input pin defines whether the I/O pins that are not actively used during configuration have pull-up resistors during configuration. By default, HSWAP_EN is tied High (via an internal pull-up resistor if left floating) which shuts off the pull-up resistors on the user I/O pins during configuration. When HSWAP_EN is tied Low, user I/Os have pull-ups during configuration. The Dedicated configuration pins (CCLK, DONE, PROG_B, M2, M1, M0, HSWAP_EN) and the JTAG pins (TDI, TMS, TCK, and TDO) always have a pull-up resistor to VCCAUX during configuration, regardless of the value on the HSWAP_EN pin. Similarly, the dual-purpose INIT_B pin has an internal pull-up resistor to VCCO_4 or VCCO_BOTTOM, depending on the package style.

Depending on the chosen configuration mode, the FPGA either generates a CCLK output, or CCLK is an input accepting an externally generated clock.

A persist option is available which can be used to force the configuration pins to retain their configuration function even after device configuration is complete. If the persist option is not selected then the configuration pins with the exception of CCLK, PROG_B, and DONE can be used as user I/O in normal operation. The persist option does not apply to the boundary-scan related pins. The persist feature is valuable in applications that readback configuration data after entering the User mode.

Table 27 lists the total number of bits required to configure each FPGA as well as the PROMs suitable for storing those bits. See DS123: *Platform Flash In-System Programmable Configuration PROMs* data sheet for more information.

Table 27: **Spartan-3 FPGA Configuration Data**

Device	File Sizes	Xilinx Platform Flash PROM	
		Serial Configuration	Parallel Configuration
XC3S50	439,264	XCF01S	XCF08P
XC3S200	1,047,616	XCF01S	XCF08P
XC3S400	1,699,136	XCF02S	XCF08P
XC3S1000	3,223,488	XCF04S	XCF08P
XC3S1500	5,214,784	XCF08P	XCF08P
XC3S2000	7,673,024	XCF08P	XCF08P
XC3S4000	11,316,864	XCF16P	XCF16P
XC3S5000	13,271,936	XCF16P	XCF16P

The maximum bitstream length that Spartan-3 FPGAs support in serial daisy-chains is 4,294,967,264 bits (4 Gbits), roughly equivalent to a daisy-chain with 323 XC3S5000 FPGAs. This is a limit only for serial daisy-chains where configuration data is passed via the FPGA's DOUT pin. There is no such limit for JTAG chains.

The Standard Configuration Interface

Configuration signals belong to one of two different categories: Dedicated or Dual-Purpose. Which category determines which of the FPGA's power rails supplies the signal's driver and, thus, helps describe the electrical characteristics at the pin.

The Dedicated configuration pins include PROG_B, HSWAP_EN, TDI, TMS, TCK, TDO, CCLK, DONE, and M0-M2. These pins are powered by the V_{CCAUX} supply.

The Dual-Purpose configuration pins comprise INIT_B, DOUT, BUSY, RDWR_B, CS_B, and DIN/D0-D7. Each of these pins, according to its bank placement, uses the V_{CCO} lines for either Bank 4 (VCCO_4 on most packages, VCCO_BOTTOM on TQ144 and CP132 packages) or Bank 5 (VCCO_5). All the signals used in the serial configuration modes rely on VCCO_4 power. Signals used in the parallel configuration modes and Readback require from VCCO_5 as well as from VCCO_4.

Both the Dedicated signals described above and the Dual-Purpose signals constitute the configuration interface. The Dedicated pins, powered by the 2.5V V_{CCAUX} supply, always use the LVCMOS25 I/O standard. The Dual-Purpose signals, however, are powered by the VCCO_4 supply and also by the VCCO_5 supply in the Parallel configuration modes. The simplest configuration interface uses 2.5V for VCCO_4 and VCCO_5, if required. However, VCCO_4 and, if needed, VCCO_5 can be voltages other than 2.5V but then the configuration interface will have two voltage levels: 2.5V for V_{CCAUX} and a separate V_{CCO} supply. The Dual-Purpose signals default to the LVCMOS input and output levels for the associated V_{CCO} voltage supply.

3.3V-Tolerant Configuration Interface

A 3.3V-tolerant configuration interface simply requires adding a few external resistors as described in detail in XAPP453: *The 3.3V Configuration of Spartan-3 FPGAs*.

The 3.3V-tolerance is implemented as follows (a similar approach can be used for other supply voltage levels):

Apply 3.3V to VCCO_4 and, in some configuration modes, to VCCO_5 to power the Dual-Purpose configuration pins. This scales the output voltages and input thresholds associated with these pins so that they become 3.3V-compatible.

Apply 2.5V to V_{CCAUX} to power the Dedicated configuration pins. For 3.3V-tolerance, the Dedicated inputs require series resistors to limit the incoming current to 10 mA or less. The Dedicated outputs have reduced noise margin when the FPGA drives a High logic level into another device's 3.3V receiver. Choose a power regulator or supply that can tolerate reverse current on the V_{CCAUX} lines.

Configuration Modes

Spartan-3 FPGAs support the following five configuration modes:

- Slave Serial mode
- Master Serial mode
- Slave Parallel (SelectMAP) mode
- Master Parallel (SelectMAP) mode
- Boundary-Scan (JTAG) mode (IEEE 1532/IEEE 1149.1)

Slave Serial Mode

In Slave Serial mode, the FPGA receives configuration data in bit-serial form from a serial PROM or other serial source of configuration data. The FPGA on the far right of Figure 26 is set for the Slave Serial mode. The CCLK pin on the FPGA is an input in this mode. The serial bitstream must be set up at the DIN input pin a short time before each rising edge of the externally generated CCLK.

Multiple FPGAs can be daisy-chained for configuration from a single source. After a particular FPGA has been configured, the data for the next device is routed internally to the DOUT pin. The data on the DOUT pin changes on the falling edge of CCLK.

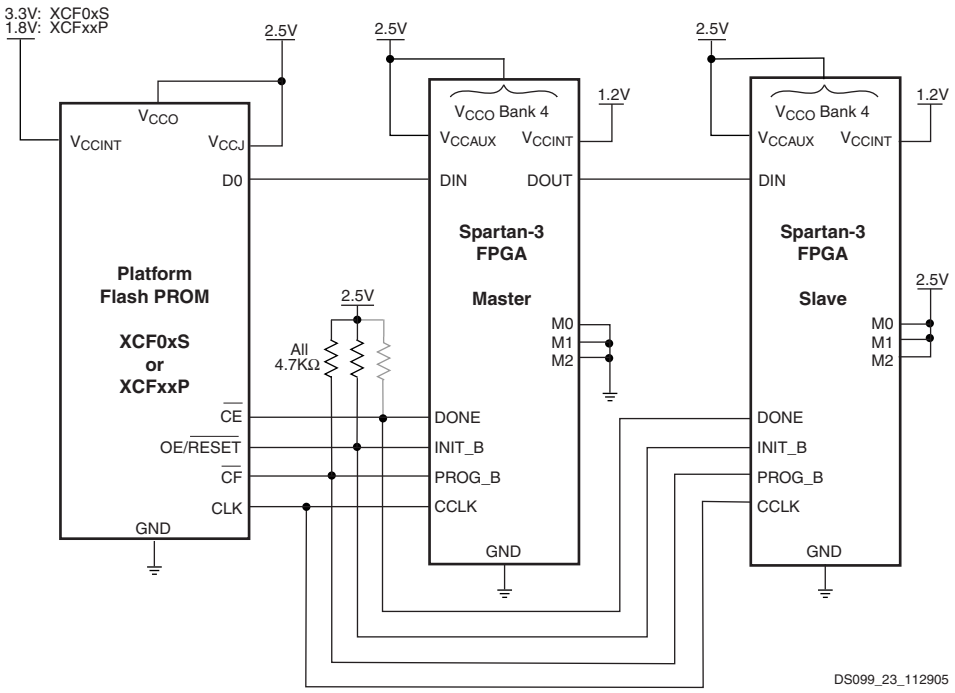

Notes:

1. There are two ways to use the DONE line. First, one may set the BitGen option DriveDone to "Yes" only for the last FPGA to be configured in the chain shown above (or for the single FPGA as may be the case). This enables the DONE pin to drive High; thus, no pull-up resistor is necessary. DriveDone is set to "No" for the remaining FPGAs in the chain. Second, DriveDone can be set to "No" for all FPGAs. Then all DONE lines are open-drain and require the pull-up resistor shown in grey. In most cases, a value between 3.3KΩ to 4.7KΩ is sufficient. However, when using DONE synchronously with a long chain of FPGAs, cumulative capacitance may necessitate lower resistor values (e.g. down to 330Ω) in order to ensure a rise time within one clock cycle.
2. For information on how to program the FPGA using 3.3V signals and power, see 3.3V-Tolerant Configuration Interface.

Figure 26: **Connection Diagram for Master and Slave Serial Configuration**

Slave Serial mode is selected by applying <111> to the mode pins (M0, M1, and M2). A pull-up on the mode pins makes slave serial the default mode if the pins are left unconnected.

Master Serial Mode

In Master Serial mode, the FPGA drives CCLK pin, which behaves as a bidirectional I/O pin. The FPGA in the center of Figure 26 is set for Master Serial mode and connects to the serial configuration PROM and to the CCLK inputs of any slave FPGAs in a configuration daisy-chain. The master FPGA drives the configuration clock on the CCLK pin to the Xilinx Serial PROM, which, in response, provides bit-serial data to the FPGA's DIN input. The FPGA accepts this data on each rising CCLK edge. After the master FPGA finishes configuring, it passes data on its DOUT pin to the next FPGA device in a daisy-chain. The DOUT data appears after the falling CCLK clock edge.

The Master Serial mode interface is identical to Slave Serial except that an internal oscillator generates the configuration clock (CCLK). A wide range of frequencies can be selected for CCLK, which always starts at a default frequency of 6 MHz. Configuration bits then switch CCLK to a higher frequency for the remainder of the configuration.

Slave Parallel Mode (SelectMAP)

The Parallel or SelectMAP modes support the fastest configuration. Byte-wide data is written into the FPGA with a BUSY flag controlling the flow of data. An external source provides 8-bit-wide data, CCLK, an active-Low Chip Select (CS_B) signal and an active-Low Write signal (RDWR_B). If BUSY is asserted (High) by the FPGA, the data must be held until BUSY goes Low. Data can also be read using the Slave Parallel mode. If RDWR_B is asserted, configuration data is read out of the FPGA as part of a readback operation.

After configuration, it is possible to use any of the Multipurpose pins (DIN/D0-D7, DOUT/BUSY, INIT_B, CS_B, and RDWR_B) as User I/Os. To do this, simply set the BitGen option *Persist* to *No* and assign the desired signals to multipurpose configuration pins using the Xilinx development software. Alternatively, it is possible to continue using the configuration port

(e.g. all configuration pins taken together) when operating in the User mode. This is accomplished by setting the *Persist* option to *Yes*.

Multiple FPGAs can be configured using the Slave Parallel mode and can be made to start-up simultaneously. Figure 27 shows the device connections. To configure multiple devices in this way, wire the individual CCLK, Data, RDWR_B, and BUSY pins of all the devices in parallel. The individual devices are loaded separately by deasserting the CS_B pin of each device in turn and writing the appropriate data.

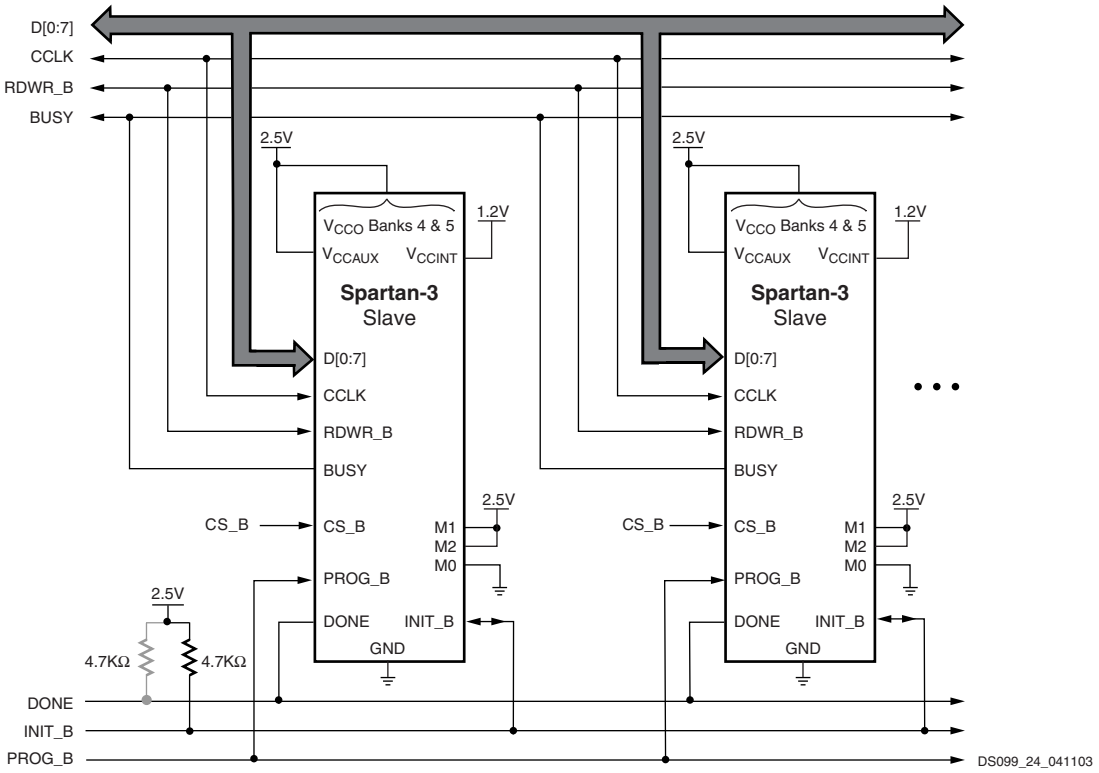

Notes:

1. There are two ways to use the DONE line. First, one may set the BitGen option DriveDone to "Yes" only for the last FPGA to be configured in the chain shown above (or for the single FPGA as may be the case). This enables the DONE pin to drive High; thus, no pull-up resistor is necessary. DriveDone is set to "No" for the remaining FPGAs in the chain. Second, DriveDone can be set to "No" for all FPGAs. Then all DONE lines are open-drain and require the pull-up resistor shown in grey. In most cases, a value between 3.3KΩ to 4.7KΩ is sufficient. However, when using DONE synchronously with a long chain of FPGAs, cumulative capacitance may necessitate lower resistor values (e.g. down to 330Ω) in order to ensure a rise time within one clock cycle.
2. If the FPGAs use different configuration data files, configure them in sequence by first asserting the CS_B of one FPGA then asserting the CS_B of the other FPGA.
3. For information on how to program the FPGA using 3.3V signals and power, see 3.3V-Tolerant Configuration Interface.

Figure 27: **Connection Diagram for Slave Parallel Configuration**

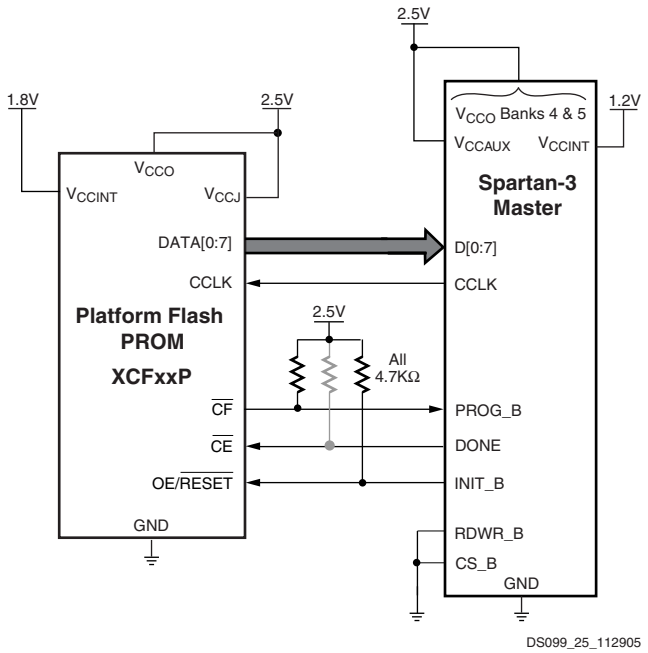

Notes:

1. There are two ways to use the DONE line. First, one may set the BitGen option DriveDone to "Yes" only for the last FPGA to be configured in the chain shown above (or for the single FPGA as may be the case). This enables the DONE pin to drive High; thus, no pull-up resistor is necessary. DriveDone is set to "No" for the remaining FPGAs in the chain. Second, DriveDone can be set to "No" for all FPGAs. Then all DONE lines are open-drain and require the pull-up resistor shown in grey. In most cases, a value between 3.3KΩ to 4.7KΩ is sufficient. However, when using DONE synchronously with a long chain of FPGAs, cumulative capacitance may necessitate lower resistor values (e.g. down to 330Ω) in order to ensure a rise time within one clock cycle.

Figure 28: **Connection Diagram for Master Parallel Configuration**

Master Parallel Mode

In this mode, the FPGA configures from byte-wide data, and the FPGA supplies the CCLK configuration clock. In Master configuration modes, CCLK behaves as a bidirectional I/O pin. Timing is similar to the Slave Parallel mode except that CCLK is supplied by the FPGA. The device connections are shown in Figure 28.

Boundary-Scan (JTAG) Mode

In Boundary-Scan mode, dedicated pins are used for configuring the FPGA. The configuration is done entirely through the IEEE 1149.1 Test Access Port (TAP). FPGA configuration using the Boundary-Scan mode is compatible with the IEEE Std 1149.1-1993 standard and IEEE Std 1532 for In-System Configurable (ISC) devices.

Configuration through the boundary-scan port is always available, regardless of the selected configuration mode. In some cases, however, the mode pin setting may affect proper programming of the device due to various interactions. For example, if the mode pins are set to Master Serial or Master Parallel mode, and the associated PROM is already programmed with a valid configuration image, then there is potential for configuration interference between the JTAG and PROM data. Selecting the Boundary-Scan mode disables the other modes and is the most reliable mode when programming via JTAG.

Configuration Sequence

The configuration of Spartan-3 devices is a three-stage process that occurs after Power-On Reset or the assertion of PROG_B. POR occurs after the V_{CCINT}, V_{CCAUX}, and V_{CCO} Bank 4 supplies have reached their respective maximum input threshold levels (see Table 29, page 59). After POR, the three-stage process begins.

First, the configuration memory is cleared. Next, configuration data is loaded into the memory, and finally, the logic is activated by a start-up process. A flow diagram for the configuration sequence of the Serial and Parallel modes is shown in Figure 29. The flow diagram for the Boundary-Scan configuration sequence appears in Figure 30.

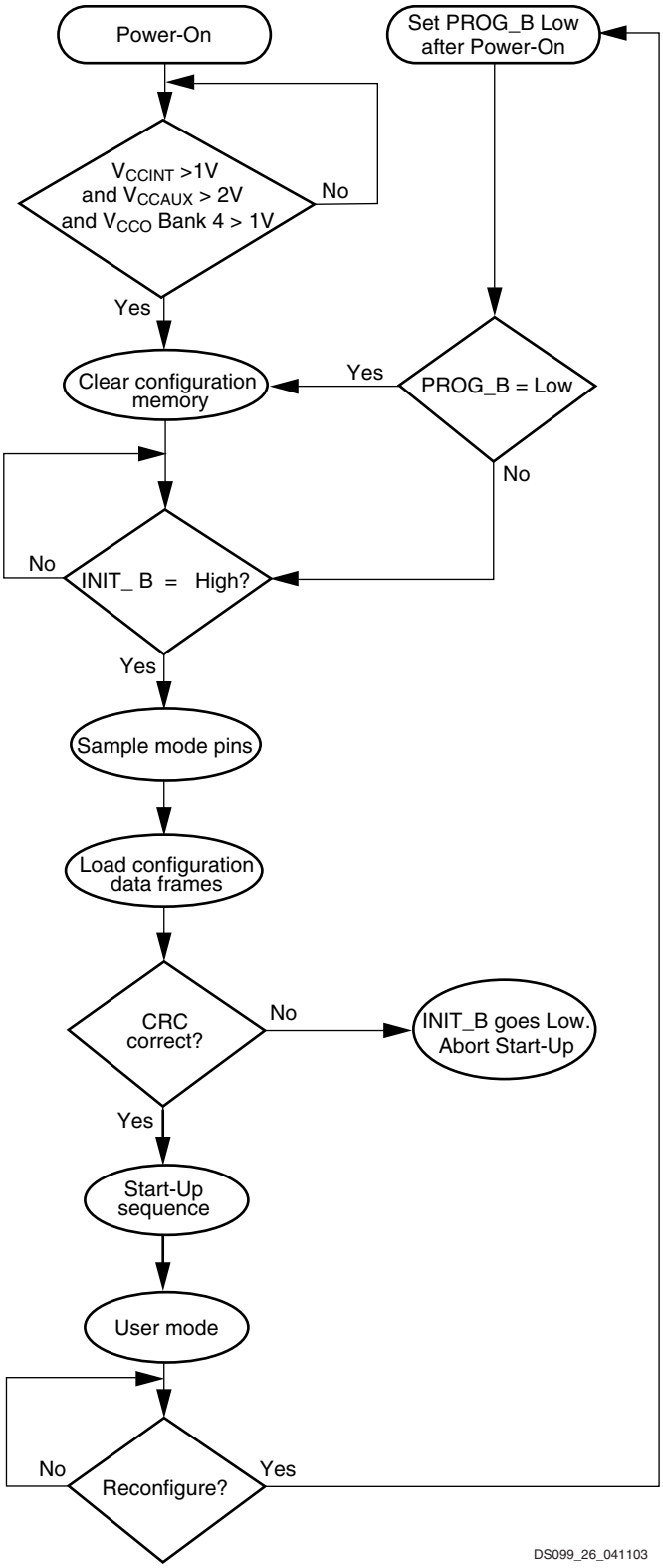

Figure 29: **Configuration Flow Diagram for the Serial and Parallel Modes**

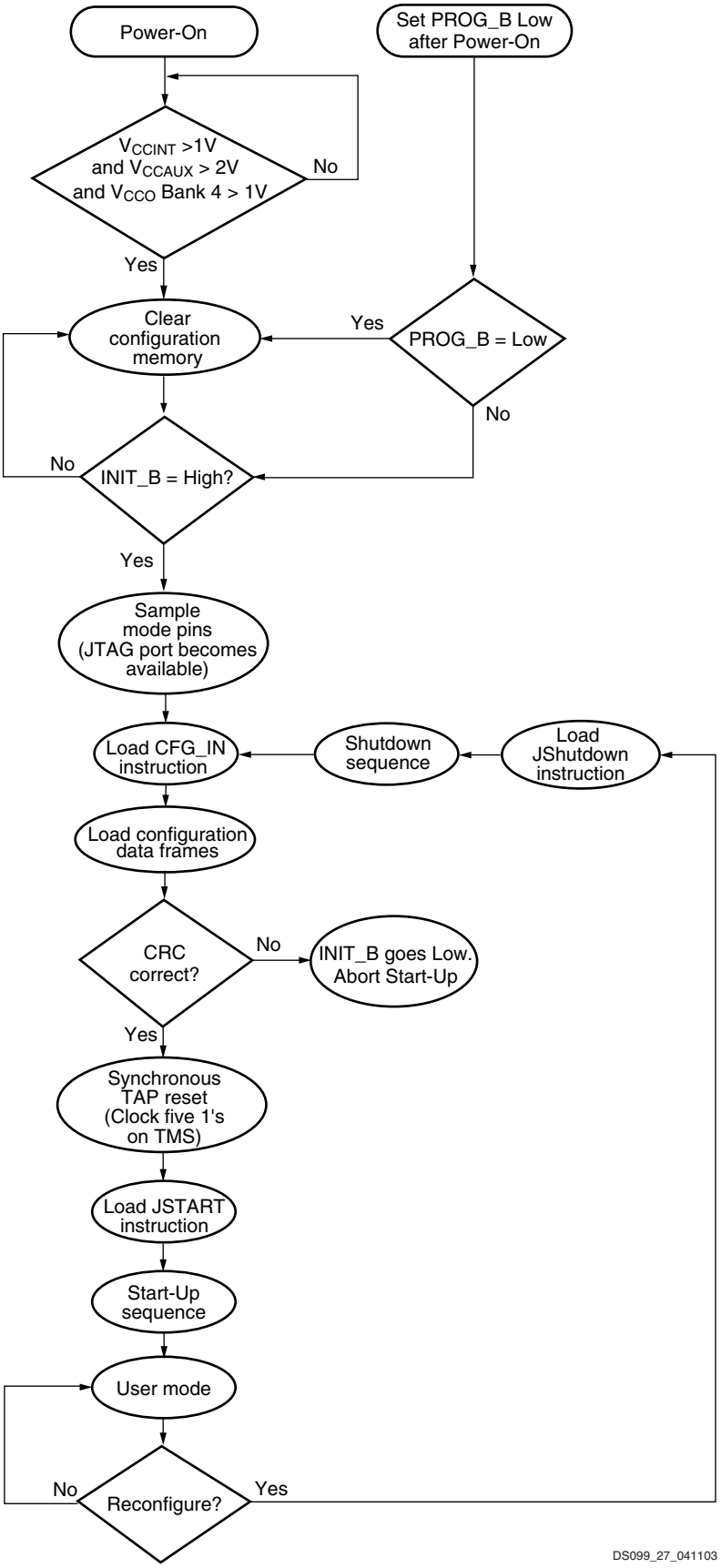

Figure 30: **Boundary-Scan Configuration Flow Diagram**

Configuration is automatically initiated after power-on unless it is delayed by the user. INIT_B is an open-drain line that the FPGA holds Low during the clearing of the configuration memory. Extending the time that the pin is Low causes the configuration sequencer to wait. Thus, configuration is delayed by preventing entry into the phase where data is loaded.

The configuration process can also be initiated by asserting the PROG_B pin. The end of the memory-clearing phase is signaled by the INIT_B pin going High. At this point, the configuration data is written to the FPGA. The FPGA pulses the Global Set/Reset (GSR) signal at the end of configuration, resetting all flip-flops. The completion of the entire process is signaled by the DONE pin going High.

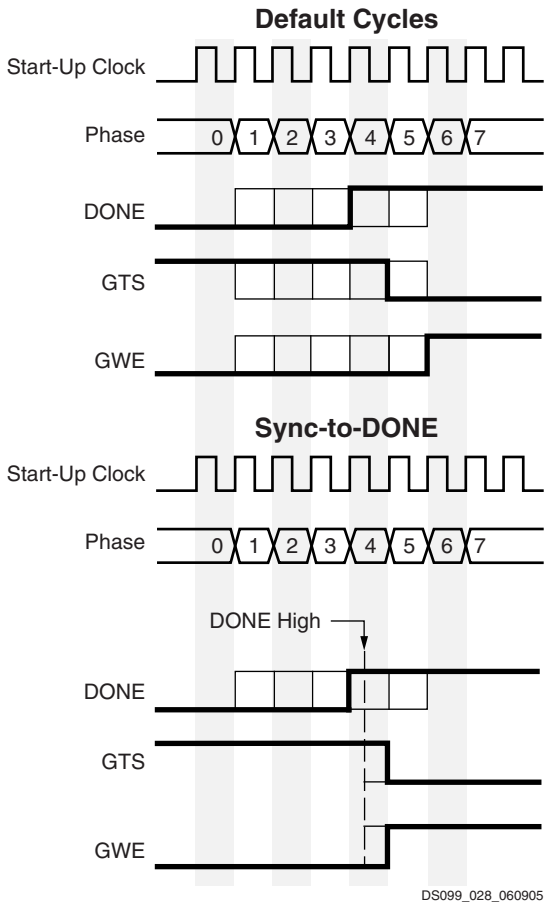

Figure 31: **Default Start-Up Sequence**

The default start-up sequence, shown in Figure 31, serves as a transition to the User mode. The default start-up sequence is that one CCLK cycle after DONE goes High, the Global Three-State signal (GTS) is released. This permits device outputs to which signals have been assigned to become active. One CCLK cycle later, the Global Write Enable (GWE) signal is released. This permits the internal storage elements to begin changing state in response to the design logic and the user clock.

The relative timing of configuration events can be changed via the BitGen options in the Xilinx development software. In addition, the GTS and GWE events can be made dependent on the DONE pins of multiple devices all going High, forcing the devices to start synchronously. The sequence can also be paused at any stage, until lock has been achieved on any DCM.

Readback

Using Slave Parallel mode, configuration data from the FPGA can be read back. Readback is supported only in the Slave Parallel and Boundary-Scan modes.

Along with the configuration data, it is possible to read back the contents of all registers, distributed RAM, and block RAM resources. This capability is used for real-time debugging.

Additional Configuration Details

Additional details about the Spartan-3 FPGA configuration architecture and command set are available in UG332: *Spartan-3 Generation Configuration User Guide* and in application note XAPP452: *Spartan-3 Advanced Configuration Architecture*.

Powering Spartan-3 FPGAs

Voltage Regulators

Various power supply manufacturers offer complete power solutions for Xilinx FPGAs, including some with integrated multi-rail regulators specifically designed for Spartan-3 FPGAs. The Xilinx Power Corner web page provides links to vendor solution guides as well as Xilinx power estimation and analysis tools.

Power Distribution System (PDS) Design and Bypass/Decoupling Capacitors

Good power distribution system (PDS) design is important for all FPGA designs, especially for high-performance applications. Proper design results in better overall performance, lower clock and DCM jitter, and a generally more robust system. Before designing the printed circuit board (PCB) for the FPGA design, review application note XAPP623: *Power Distribution System (PDS) Design: Using Bypass/Decoupling Capacitors*.

Power-On Behavior

Spartan-3 FPGAs have a built-in Power-On Reset (POR) circuit that monitors the three power rails required to successfully configure the FPGA. At power-up, the POR circuit holds the FPGA in a reset state until the V_{CCINT}, V_{CCAUX}, and V_{CCO} Bank 4 supplies reach their respective input threshold levels (see Table 29, page 59). After all three supplies reach their respective threshold, the POR reset is released and the FPGA begins its configuration process.

Because the three supply inputs must be valid to release the POR reset and can be supplied in any order, there are no specific voltage sequencing requirements. However, applying the FPGA's V_{CCAUX} supply before the V_{CCINT} supply uses the least I_{CCINT} current.

Once all three supplies are valid, the minimum current required to power-on the FPGA is equal to the worst-case quiescent current, as specified in Table 34, page 62. Spartan-3 FPGAs do not require Power-On Surge (POS) current to successfully configure.

Surplus I_{CCINT} if V_{CCINT} Applied before V_{CCAUX}

If the V_{CCINT} supply is applied before the V_{CCAUX} supply, the FPGA may draw a surplus I_{CCINT} current in addition to the I_{CCINT} quiescent current levels specified in Table 34. The momentary additional I_{CCINT} surplus current might be a few hundred milliamperes under nominal conditions, significantly less than the instantaneous current consumed by the bypass capacitors at power-on. However, the surplus current immediately disappears when the V_{CCAUX} supply is applied, and, in response, the FPGA's I_{CCINT} quiescent current demand drops to the levels specified in Table 34. The FPGA does not use nor does it require the surplus current to successfully power-on and configure. If applying V_{CCINT} before V_{CCAUX}, ensure that the regulator does not have a foldback feature that could inadvertently shut down in the presence of the surplus current.

Maximum Allowed V_{CCINT} Ramp Rate on Early Devices, if V_{VCCINT}Supply is Last in Sequence

All devices with a mask revision code 'E' or later do not have a V_{CCINT} ramp rate requirement. See Mask and Fab Revisions, page 58.

Early Spartan-3 FPGAs were produced at a 200 mm wafer production facility and are identified by a fabrication/process code of "FQ" on the device top marking, as shown in Package Marking, page 5. These "FQ" devices have a maximum V_{CCINT} ramp rate requirement if and only if V_{CCINT} is the last supply to ramp, after the V_{CCAUX} and V_{CCO} Bank 4 supplies. This maximum ramp rate appears as T_{CCINT} in Table 30, page 60.

Minimum Allowed V_{CCO} Ramp Rate on Early Devices

Devices shipped since 2006 essentially have no V_{CCO} ramp rate limits, shown in Table 30, page 60. Similarly, all devices with a mask revision code 'E' or later do not have a V_{CCO} ramp rate limit. See Mask and Fab Revisions, page 58.

Initial Spartan-3 FPGA mask revisions have a limit on how fast the V_{CCO} supply can ramp. The minimum allowed V_{CCO} ramp rate appears as T_{CCO} in Table 30, page 60. The minimum rate is affected by the package inductance. Consequently, the ball grid array and chip-scale packages (CP132, FT256, FG456, FG676, and FG900) allow a faster ramp rate than the quad-flat packages (VQ100, TQ144, and PQ208).

Configuration Data Retention, Brown-Out

The FPGA's configuration data is stored in robust CMOS configuration latches. The data in these latches is retained even when the voltages drop to the minimum levels necessary to preserve RAM contents. This is specified in Table 31, page 60.

If, after configuration, the V_{CCAUX} or V_{CCINT} supply drops below its data retention voltage, clear the current device configuration using one of the following methods:

- Force the V_{CCAUX} or V_{CCINT} supply voltage below the minimum Power On Reset (POR) voltage threshold Table 29, page 59).
- Assert PROG_B Low.

The POR circuit does not monitor the VCCO_4 supply after configuration. Consequently, dropping the VCCO_4 voltage does not reset the device by triggering a Power-On Reset (POR) event.

No Internal Charge Pumps or Free-Running Oscillators

Some system applications are sensitive to sources of analog noise. Spartan-3 FPGA circuitry is fully static and does not employ internal charge pumps.

The CCLK configuration clock is active during the FPGA configuration process. After configuration completes, the CCLK oscillator is automatically disabled unless the Bitstream Generator (BitGen) option ***Persist=Yes***. See Module 4: Table 80, page 125.

Spartan-3 FPGAs optionally support a featured called Digitally Controlled Impedance (DCI). When used in an application, the DCI logic uses an internal oscillator. The DCI logic is only enabled if the FPGA application specifies an I/O standard that requires DCI (LVDCI_33, LVDCI_25, etc.). If DCI is not used, the associated internal oscillator is also disabled.

In summary, unless an application uses the ***Persist=Yes*** option or specifies a DCI I/O standard, an FPGA with no external switching remains fully static.

Revision History

Date	Version No.	Description
04/11/2003	1.0	Initial Xilinx release
05/19/2003	1.1	Added Block RAM column, DCMs, and multipliers to XC3S50 descriptions.
07/11/2003	1.2	Explained the configuration port *Persist* option in Slave Parallel Mode (SelectMAP) section. Updated Figure 8 and Double-Data-Rate Transmission section to indicate that DDR clocking for the XC3S50 is the same as that for all other Spartan-3 devices. Updated description of I/O voltage tolerance in ESD Protection section. In Table 10, changed input termination type for DCI version of the LVCMOS standard to *None*. Added additional flexibility for making DLL connections in Figure 21 and accompanying text. In the Configuration section, inserted an explanation of how to choose power supplies for the configuration interface, including guidelines for achieving 3.3V-tolerance.
08/24/2004	1.3	Showed inversion of 3-state signal (Figure 7). Clarified description of pull-up and pull-down resistors (Table 6 and page 13). Added information on operating block RAM with multipliers to page 26. Corrected output buffer name in Figure 21. Corrected description of how DOUT is synchronized to CCLK (page 47).
08/19/2005	1.4	Corrected description of WRITE_FIRST and READ_FIRST in Table 13. Added note regarding address setup and hold time requirements whenever a block RAM port is enabled (Table 13). Added information in the maximum length of a Configuration daisy-chain. Added reference to XAPP453 in 3.3V-Tolerant Configuration Interface section. Added information on the STATUS[2] DCM output (Table 23). Added information on CCLK behavior and termination recommendations to Configuration. Added Additional Configuration Details section. Added Powering Spartan-3 FPGAs section. Removed GSR from Figure 31 because its timing is not programmable.
04/03/2006	2.0	Updated Figure 7. Updated Figure 14. Updated Table 10. Updated Figure 22. Corrected Platform Flash supply voltage name and value in Figure 26 and Figure 28. Added No Internal Charge Pumps or Free-Running Oscillators. Corrected a few minor typographical errors.
04/26/2006	2.1	Added more information on the pull-up resistors that are active during configuration to Configuration. Added information to Boundary-Scan (JTAG) Mode about potential interactions when configuring via JTAG if the mode select pins are set for other than JTAG.
05/25/2007	2.2	Added Spartan-3 FPGA Design Documentation. Noted SSTL2_I_DCI 25-Ohm driver in Table 10 and Table 11. Added note that pull-down is active during boundary scan tests.
11/30/2007	2.3	Updated links to documentation on xilinx.com.
06/25/2008	2.4	Added HSLVDCI to Table 10. Updated formatting and links.
12/04/2009	2.5	Updated HSLVDCI description in Digitally Controlled Impedance (DCI). Updated the low-voltage differential signaling V_{CCO} values in Table 10. Noted that the CP132 package is being discontinued in The Organization of IOBs into Banks. Updated rule 4 in Rules Concerning Banks. Added software version requirement in The Fixed Phase Mode.
10/29/2012	3.0	Added Notice of Disclaimer. Per XCN07022, updated the discontinued FG1156 and FGG1156 package discussion throughout document. Per XCN08011, updated the discontinued CP132 and CPG132 package discussion throughout document. This product is not recommended for new designs.
06/27/2013	3.1	Removed banner. This product IS recommended for new designs.

Notice of Disclaimer

THE XILINX HARDWARE FPGA AND CPLD DEVICES REFERRED TO HEREIN ("PRODUCTS") ARE SUBJECT TO THE TERMS AND CONDITIONS OF THE XILINX LIMITED WARRANTY WHICH CAN BE VIEWED AT http://www.xilinx.com/warranty.htm. THIS LIMITED WARRANTY DOES NOT EXTEND TO ANY USE OF PRODUCTS IN AN APPLICATION OR ENVIRONMENT THAT IS NOT WITHIN THE SPECIFICATIONS STATED IN THE XILINX DATA SHEET. ALL SPECIFICATIONS ARE SUBJECT TO CHANGE WITHOUT NOTICE. PRODUCTS ARE NOT DESIGNED OR INTENDED TO BE FAIL-SAFE OR FOR USE IN ANY APPLICATION REQUIRING FAIL-SAFE PERFORMANCE, SUCH AS LIFE-SUPPORT OR SAFETY DEVICES OR SYSTEMS, OR ANY OTHER APPLICATION THAT INVOKES THE POTENTIAL RISKS OF DEATH, PERSONAL INJURY, OR PROPERTY OR ENVIRONMENTAL DAMAGE ("CRITICAL APPLICATIONS"). USE OF PRODUCTS IN CRITICAL APPLICATIONS IS AT THE SOLE RISK OF CUSTOMER, SUBJECT TO APPLICABLE LAWS AND REGULATIONS.

CRITICAL APPLICATIONS DISCLAIMER

XILINX PRODUCTS (INCLUDING HARDWARE, SOFTWARE AND/OR IP CORES) ARE NOT DESIGNED OR INTENDED TO BE FAIL-SAFE, OR FOR USE IN ANY APPLICATION REQUIRING FAIL-SAFE PERFORMANCE, SUCH AS IN LIFE-SUPPORT OR SAFETY DEVICES OR SYSTEMS, CLASS III MEDICAL DEVICES, NUCLEAR FACILITIES, APPLICATIONS RELATED TO THE DEPLOYMENT OF AIRBAGS, OR ANY OTHER APPLICATIONS THAT COULD LEAD TO DEATH, PERSONAL INJURY OR SEVERE PROPERTY OR ENVIRONMENTAL DAMAGE (INDIVIDUALLY AND COLLECTIVELY, "CRITICAL APPLICATIONS"). FURTHERMORE, XILINX PRODUCTS ARE NOT DESIGNED OR INTENDED FOR USE IN ANY APPLICATIONS THAT AFFECT CONTROL OF A VEHICLE OR AIRCRAFT, UNLESS THERE IS A FAIL-SAFE OR REDUNDANCY FEATURE (WHICH DOES NOT INCLUDE USE OF SOFTWARE IN THE XILINX DEVICE TO IMPLEMENT THE REDUNDANCY) AND A WARNING SIGNAL UPON FAILURE TO THE OPERATOR. CUSTOMER AGREES, PRIOR TO USING OR DISTRIBUTING ANY SYSTEMS THAT INCORPORATE XILINX PRODUCTS, TO THOROUGHLY TEST THE SAME FOR SAFETY PURPOSES. TO THE MAXIMUM EXTENT PERMITTED BY APPLICABLE LAW, CUSTOMER ASSUMES THE SOLE RISK AND LIABILITY OF ANY USE OF XILINX PRODUCTS IN CRITICAL APPLICATIONS.

AUTOMOTIVE APPLICATIONS DISCLAIMER

XILINX PRODUCTS ARE NOT DESIGNED OR INTENDED TO BE FAIL-SAFE, OR FOR USE IN ANY APPLICATION REQUIRING FAIL-SAFE PERFORMANCE, SUCH AS APPLICATIONS RELATED TO: (I) THE DEPLOYMENT OF AIRBAGS, (II) CONTROL OF A VEHICLE, UNLESS THERE IS A FAIL-SAFE OR REDUNDANCY FEATURE (WHICH DOES NOT INCLUDE USE OF SOFTWARE IN THE XILINX DEVICE TO IMPLEMENT THE REDUNDANCY) AND A WARNING SIGNAL UPON FAILURE TO THE OPERATOR, OR (III) USES THAT COULD LEAD TO DEATH OR PERSONAL INJURY. CUSTOMER ASSUMES THE SOLE RISK AND LIABILITY OF ANY USE OF XILINX PRODUCTS IN SUCH APPLICATIONS.

DC Electrical Characteristics

In this section, specifications may be designated as Advance, Preliminary, or Production. These terms are defined as follows:

- **Advance:** Initial estimates are based on simulation, early characterization, and/or extrapolation from the characteristics of other families. Values are subject to change. Although speed grades with this designation are considered relatively stable and conservative, some under-reporting might still occur. Use as estimates, not for production.
- **Preliminary:** Based on complete early silicon characterization. Devices and speed grades with this designation are intended to give a better indication of the expected performance of production silicon. The probability of under-reported delays is greatly reduced compared to Advance data. Use as estimates, not for production.
- **Production:** These specifications are approved only after silicon has been characterized over numerous production lots. There is no under-reporting of delays, and customers receive formal notification of any subsequent changes. Parameter values are considered stable with no future changes expected.

  Production-quality systems must only use FPGA designs compiled with a Production status speed file. FPGA designs using a less mature speed file designation should only be used during system prototyping or preproduction qualification. FPGA designs with speed files designated as Advance or Preliminary should not be used in a production-quality system.

Whenever a speed file designation changes, as a device matures toward Production status, rerun the latest Xilinx ISE® software on the FPGA design to ensure that the FPGA design incorporates the latest timing information and software updates.

All parameter limits are representative of worst-case supply voltage and junction temperature conditions. **The following applies unless otherwise noted: The parameter values published in this module apply to all Spartan®-3 devices. AC and DC characteristics are specified using the same numbers for both commercial and industrial grades.** All parameters representing voltages are measured with respect to GND.

Mask and Fab Revisions

Some specifications list different values for one or more mask or fab revisions, indicated by the device top marking (see Package Marking, page 5). The revision differences involve the power ramp rates, differential DC specifications, and DCM characteristics. The most recent revision (mask rev E and GQ fab/geometry code) is errata-free with improved specifications than earlier revisions.

Mask rev E with fab rev GQ has been shipping since 2005 (see XCN05009) and has been 100% of Xilinx Spartan-3 device shipments since 2006. SCD 0974 was provided to ensure the receipt of the rev E silicon, but it is no longer needed. Parts ordered under the SCD appended “0974” to the standard part number. For example, “XC3S50-4VQ100C” became “XC3S50-4VQ100C0974”.

Table 28: **Absolute Maximum Ratings**

Symbol	Description	Conditions		Min	Max	Units
V_{CCINT}	Internal supply voltage relative to GND			–0.5	1.32	V
V_{CCAUX}	Auxiliary supply voltage relative to GND			–0.5	3.00	V
V_{CCO}	Output driver supply voltage relative to GND			–0.5	3.75	V
V_{REF}	Input reference voltage relative to GND			–0.5	V_{CCO} + 0.5	V
V_{IN}	Voltage applied to all User I/O pins and Dual-Purpose pins relative to GND(2,4)	Driver in a high-impedance state	Commercial	–0.95	4.4	V
			Industrial	–0.85	4.3	
	Voltage applied to all Dedicated pins relative to GND(3)		All temp. ranges	–0.5	V_{CCAUX} + 0.5	V

© Copyright 2003–2013 Xilinx, Inc. XILINX, the Xilinx logo, Virtex, Spartan, ISE, Artix, Kintex, Zynq, Vivado and other designated brands included herein are trademarks of Xilinx in the United States and other countries. PCI and PCI-X are trademarks of PCI-SIG and used under license. All other trademarks are the property of their respective owners.

Table 28: **Absolute Maximum Ratings *(Cont'd)***

Symbol	Description	Conditions	Min	Max	Units
I_{IK}	Input clamp current per I/O pin	–0.5 V < V_{IN} < (V_{CCO} + 0.5 V)	–	±100	mA
V_{ESD}	Electrostatic Discharge Voltage pins relative to GND	Human body model	–	±2000	V
		Charged device model	–	±500	V
		Machine model	–	±200	V
T_J	Junction temperature		–	125	°C
T_{SOL}	Soldering temperature(4)		–	220	°C
T_{STG}	Storage temperature		–65	150	°C

Notes:

1. Stresses beyond those listed under Absolute Maximum Ratings may cause permanent damage to the device. These are stress ratings only; functional operation of the device at these or any other conditions beyond those listed under the Recommended Operating Conditions is not implied. Exposure to Absolute Maximum Ratings conditions for extended periods of time adversely affects device reliability.
2. All User I/O and Dual-Purpose pins (DIN/D0, D1–D7, CS_B, RDWR_B, BUSY/DOUT, and INIT_B) draw power from the V_{CCO} power rail of the associated bank. Keeping VIN within 500 mV of the associated V_{CCO} rails or ground rail ensures that the internal diode junctions that exist between each of these pins and the V_{CCO} and GND rails do not turn on. Table 32 specifies the V_{CCO} range used to determine the max limit. Input voltages outside the –0.5V to V_{CCO}+0.5V voltage range are permissible provided that the I_{IK} input clamp diode rating is met and no more than 100 pins exceed the range simultaneously. Prolonged exposure to such current may compromise device reliability. A sustained current of 10 mA will not compromise device reliability. See XAPP459, *Eliminating I/O Coupling Effects when Interfacing Large-Swing Single-Ended Signals to User I/O Pins on Spartan-3 Generation FPGAs* for more details. The VIN limits apply to both the DC and AC components of signals. Simple application solutions are available that show how to handle overshoot/undershoot as well as achieve PCI compliance. Refer to the following application notes: XAPP457, *Powering and Configuring Spartan-3 Generation FPGAs in Compliant PCI Applications* and XAPP659, *Virtex®-II Pro / Virtex-II Pro X 3.3V I/O Design Guidelines*.
3. All Dedicated pins (M0–M2, CCLK, PROG_B, DONE, HSWAP_EN, TCK, TDI, TDO, and TMS) draw power from the V_{CCAUX} rail (2.5V). Meeting the V_{IN} max limit ensures that the internal diode junctions that exist between each of these pins and the V_{CCAUX} rail do not turn on. Table 32 specifies the V_{CCAUX} range used to determine the max limit. When V_{CCAUX} is at its maximum recommended operating level (2.625V), V_{IN} max < 3.125V. As long as the V_{IN} max specification is met, oxide stress is not possible. For information concerning the use of 3.3V signals, see the 3.3V-Tolerant Configuration Interface, page 47. See also XAPP459.
4. For soldering guidelines, see UG112, *Device Packaging and Thermal Characteristics* and XAPP427, *Implementation and Solder Reflow Guidelines for Pb-Free Packages*.

Table 29: **Supply Voltage Thresholds for Power-On Reset**

Symbol	Description	Min	Max	Units
V_{CCINTT}	Threshold for the V_{CCINT} supply	0.4	1.0	V
V_{CCAUXT}	Threshold for the V_{CCAUX} supply	0.8	2.0	V
V_{CCO4T}	Threshold for the V_{CCO} Bank 4 supply	0.4	1.0	V

Notes:

1. V_{CCINT}, V_{CCAUX}, and V_{CCO} supplies may be applied in any order. When applying V_{CCINT} power before V_{CCAUX} power, the FPGA may draw a *surplus* current in addition to the quiescent current levels specified in Table 34. Applying V_{CCAUX} eliminates the surplus current. The FPGA does not use any of the surplus current for the power-on process. For this power sequence, make sure that regulators with foldback features will not shut down inadvertently.
2. To ensure successful power-on, V_{CCINT}, V_{CCO} Bank 4, and V_{CCAUX} supplies must rise through their respective threshold-voltage ranges with no dips at any point.
3. If a brown-out condition occurs where V_{CCAUX} or V_{CCINT} drops below the retention voltage indicated in Table 31, then V_{CCAUX} or V_{CCINT} must drop below the minimum power-on reset voltage in order to clear out the device configuration content.

Table 30: **Power Voltage Ramp Time Requirements**

Symbol	Description	Device	Package	Min	Max	Units
T_{CCO}	V_{CCO} ramp time for all eight banks	All	All	No limit(4)	–	N/A
T_{CCINT}	V_{CCINT} ramp time, only if V_{CCINT} is last in three-rail power-on sequence	All	All	No limit	No limit(5)	N/A

Notes:

1. If a limit exists, this specification is based on characterization.
2. The ramp time is measured from 10% to 90% of the full nominal voltage swing for all I/O standards.
3. For information on power-on current needs, see Power-On Behavior, page 54
4. For mask revisions earlier than revision E (see Mask and Fab Revisions, page 58), T_{CCO} min is limited to 2.0 ms for the XC3S200 and XC3S400 devices in QFP packages, and limited to 0.6 ms for the XC3S200, XC3S400, XC3S1500, and XC3S4000 devices in the FT and FG packages.
5. For earlier device versions with the FQ fabrication/process code (see Mask and Fab Revisions, page 58), T_{CCINT} max is limited to 500 µs.

Table 31: **Power Voltage Levels Necessary for Preserving RAM Contents**

Symbol	Description	Min	Units
V_{DRINT}	V_{CCINT} level required to retain RAM data	1.0	V
V_{DRAUX}	V_{CCAUX} level required to retain RAM data	2.0	V

Notes:

1. RAM contents include data stored in CMOS configuration latches.
2. The level of the V_{CCO} supply has no effect on data retention.
3. If a brown-out condition occurs where V_{CCAUX} or V_{CCINT} drops below the retention voltage, then V_{CCAUX} or V_{CCINT} must drop below the minimum power-on reset voltage indicated in Table 29 in order to clear out the device configuration content.

Table 32: **General Recommended Operating Conditions**

Symbol	Description		Min	Nom	Max	Units
T_J	Junction temperature	Commercial	0	25	85	°C
		Industrial	–40	25	100	°C
V_{CCINT}	Internal supply voltage		1.140	1.200	1.260	V
V_{CCO}(1)	Output driver supply voltage		1.140	–	3.465	V
V_{CCAUX}	Auxiliary supply voltage		2.375	2.500	2.625	V
ΔV_{CCAUX}(2)	Voltage variance on VCCAUX when using a DCM		–	–	10	mV/ms
V_{IN}(3)	Voltage applied to all User I/O pins and Dual-Purpose pins relative to GND(4)(6)	V_{CCO} = 3.3V, IO	–0.3	–	3.75	V
		V_{CCO} = 3.3V, IO_Lxxy(7)	–0.3	–	3.75	V
		$V_{CCO} \leq$ 2.5V, IO	–0.3	–	V_{CCO} + 0.3(4)	V
		$V_{CCO} \leq$ 2.5V, IO_Lxxy(7)	–0.3	–	V_{CCO} + 0.3(4)	V
	Voltage applied to all Dedicated pins relative to GND(5)		–0.3	–	V_{CCAUX} + 0.3(5)	V

Notes:

1. The V_{CCO} range given here spans the lowest and highest operating voltages of all supported I/O standards. The recommended V_{CCO} range specific to each of the single-ended I/O standards is given in Table 35, and that specific to the differential standards is given in Table 37.
2. Only during DCM operation is it recommended that the rate of change of V_{CCAUX} not exceed 10 mV/ms.
3. Input voltages outside the recommended range are permissible provided that the I_{IK} input diode clamp diode rating is met. Refer to Table 28.
4. Each of the User I/O and Dual-Purpose pins is associated with one of the V_{CCO} rails. Meeting the V_{IN} limit ensures that the internal diode junctions that exist between these pins and their associated V_{CCO} and GND rails do not turn on. The absolute maximum rating is provided in Table 28.
5. All Dedicated pins (PROG_B, DONE, TCK, TDI, TDO, and TMS) draw power from the V_{CCAUX} rail (2.5V). Meeting the V_{IN} max limit ensures that the internal diode junctions that exist between each of these pins and the V_{CCAUX} and GND rails do not turn on.
6. See XAPP459, *Eliminating I/O Coupling Effects when Interfacing Large-Swing Single-Ended Signals to User I/O Pins on Spartan-3 Generation FPGAs*.
7. For single-ended signals that are placed on a differential-capable I/O, V_{IN} of –0.2V to –0.3V is supported but can cause increased leakage between the two pins. See the *Parasitic Leakage* section in UG331, *Spartan-3 Generation FPGA User Guide*.

Table 33: **General DC Characteristics of User I/O, Dual-Purpose, and Dedicated Pins**

Symbol	Description	Test Conditions		Min	Typ	Max	Units
I_L[(2)(4)]	Leakage current at User I/O, Dual-Purpose, and Dedicated pins	Driver is Hi-Z, V_{IN} = 0V or V_{CCO} max, sample-tested	$V_{CCO} \geq 3.0V$	–	-	±25	µA
			$V_{CCO} < 3.0V$	–	-	±10	µA
I_{RPU}[(3)]	Current through pull-up resistor at User I/O, Dual-Purpose, and Dedicated pins	V_{IN} = 0V, V_{CCO} = 3.3V		–0.84	-	–2.35	mA
		V_{IN} = 0V, V_{CCO} = 3.0V		–0.69	-	–1.99	mA
		V_{IN} = 0V, V_{CCO} = 2.5V		–0.47	-	–1.41	mA
		V_{IN} = 0V, V_{CCO} = 1.8V		–0.21	-	–0.69	mA
		V_{IN} = 0V, V_{CCO} = 1.5V		–0.13	-	–0.43	mA
		V_{IN} = 0V, V_{CCO} = 1.2V		–0.06	-	–0.22	mA
R_{PU}[(3)]	Equivalent resistance of pull-up resistor at User I/O, Dual-Purpose, and Dedicated pins, derived from I_{RPU}	V_{CCO} = 3.0V to 3.465V		1.27	-	4.11	kΩ
		V_{CCO} = 2.3V to 2.7V		1.15	-	3.25	kΩ
		V_{CCO} = 1.7V to 1.9V		2.45	-	9.10	kΩ
		V_{CCO} = 1.4V to 1.6V		3.25	-	12.10	kΩ
		V_{CCO} = 1.14 to 1.26V		5.15	-	21.00	kΩ
I_{RPD}[(3)]	Current through pull-down resistor at User I/O, Dual-Purpose, and Dedicated pins	$V_{IN} = V_{CCO}$		0.37	-	1.67	mA
R_{PD}[(3)]	Equivalent resistance of pull-down resistor at User I/O, Dual-Purpose, and Dedicated pins, driven from I_{RPD}	$V_{IN} = V_{CCO}$ = 3.0V to 3.465V		1.75	-	9.35	kΩ
		$V_{IN} = V_{CCO}$ = 2.3V to 2.7V		1.35	-	7.30	kΩ
		$V_{IN} = V_{CCO}$ = 1.7V to 1.9V		1.00	-	5.15	kΩ
		$V_{IN} = V_{CCO}$ = 1.4V to 1.6V		0.85	-	4.35	kΩ
		$V_{IN} = V_{CCO}$ = 1.14 to 1.26V		0.68	-	3.465	kΩ
R_{DCI}	Value of external reference resistor to support DCI I/O standards			20	-	100	Ω
I_{REF}	V_{REF} current per pin	$V_{CCO} \geq 3.0V$		–	-	±25	µA
		$V_{CCO} < 3.0V$		–	-	±10	µA
C_{IN}	Input capacitance			3	-	10	pF

Notes:

1. The numbers in this table are based on the conditions set forth in Table 32.
2. The I_L specification applies to every I/O pin throughout power-on as long as the voltage on that pin stays between the absolute V_{IN} minimum and maximum values (Table 28). For hot-swap applications, at the time of card connection, be sure to keep all I/O voltages within this range before applying V_{CCO} power. Consider applying V_{CCO} power before connecting the signal lines, to avoid turning on the ESD protection diodes, shown in Module 2: Figure 7, page 11. When the FPGA is completely unpowered, the I/O pins are high impedance, but there is a path through the upper and lower ESD protection diodes.
3. This parameter is based on characterization. The pull-up resistance $R_{PU} = V_{CCO} / I_{RPU}$. The pull-down resistance $R_{PD} = V_{IN} / I_{RPD}$. Spartan-3 family values for both resistances are stronger than they have been for previous FPGA families.
4. For single-ended signals that are placed on a differential-capable I/O, V_{IN} of –0.2V to –0.3V is supported but can cause increased leakage between the two pins. See the *Parasitic Leakage* section in UG331, *Spartan-3 Generation FPGA User Guide*.

Table 34: **Quiescent Supply Current Characteristics**

Symbol	Description	Device	Typical[1]	Commercial Maximum[1]	Industrial Maximum[1]	Units
I_{CCINTQ}	Quiescent V_{CCINT} supply current	XC3S50	5	24	31	mA
		XC3S200	10	54	80	mA
		XC3S400	15	110	157	mA
		XC3S1000	35	160	262	mA
		XC3S1500	45	260	332	mA
		XC3S2000	60	360	470	mA
		XC3S4000	100	450	810	mA
		XC3S5000	120	600	870	mA
I_{CCOQ}	Quiescent V_{CCO} supply current	XC3S50	1.5	2.0	2.5	mA
		XC3S200	1.5	3.0	3.5	mA
		XC3S400	1.5	3.0	3.5	mA
		XC3S1000	2.0	4.0	5.0	mA
		XC3S1500	2.5	4.0	5.0	mA
		XC3S2000	3.0	5.0	6.0	mA
		XC3S4000	3.5	5.0	6.0	mA
		XC3S5000	3.5	5.0	6.0	mA
I_{CCAUXQ}	Quiescent V_{CCAUX} supply current	XC3S50	7	20	22	mA
		XC3S200	10	30	33	mA
		XC3S400	15	40	44	mA
		XC3S1000	20	50	55	mA
		XC3S1500	35	75	85	mA
		XC3S2000	45	90	100	mA
		XC3S4000	55	110	125	mA
		XC3S5000	70	130	145	mA

Notes:

1. The numbers in this table are based on the conditions set forth in Table 32. Quiescent supply current is measured with all I/O drivers in a high-impedance state and with all pull-up/pull-down resistors at the I/O pads disabled. Typical values are characterized using devices with typical processing at room temperature (T_J of 25°C at V_{CCINT} = 1.2V, V_{CCO} = 3.3V, and V_{CCAUX} = 2.5V). Maximum values are the production test limits measured for each device at the maximum specified junction temperature and at maximum voltage limits with V_{CCINT} = 1.26V, V_{CCO} = 3.465V, and V_{CCAUX} = 2.625V. The FPGA is programmed with a "blank" configuration data file (i.e., a design with no functional elements instantiated). For conditions other than those described above, (e.g., a design including functional elements, the use of DCI standards, etc.), measured quiescent current levels may be different than the values in the table. Use the XPower Estimator or XPower Analyzer for more accurate estimates. See Note 2.
2. There are two recommended ways to estimate the total power consumption (quiescent plus dynamic) for a specific design: a) The Spartan-3 XPower Estimator provides quick, approximate, typical estimates, and does not require a netlist of the design. b) XPower Analyzer, part of the Xilinx ISE development software, uses the FPGA netlist as input to provide more accurate maximum and typical estimates.
3. The maximum numbers in this table also indicate the minimum current each power rail requires in order for the FPGA to power-on successfully, once all three rails are supplied. If V_{CCINT} is applied before V_{CCAUX}, there may be temporary additional I_{CCINT} current until V_{CCAUX} is applied. See Surplus I_{CCINT} if V_{CCINT} Applied before V_{CCAUX}, page 54

Table 35: **Recommended Operating Conditions for User I/Os Using Single-Ended Standards**

Signal Standard (IOSTANDARD)	V_{CCO}			V_{REF}			V_{IL}	V_{IH}
	Min (V)	Nom (V)	Max (V)	Min (V)	Nom (V)	Max (V)	Max (V)	Min (V)
GTL[3]	–	–	–	0.74	0.8	0.86	V_{REF} – 0.05	V_{REF} + 0.05
GTL_DCI	–	1.2	–	0.74	0.8	0.86	V_{REF} – 0.05	V_{REF} + 0.05
GTLP[3]	–	–	–	0.88	1	1.12	V_{REF} – 0.1	V_{REF} + 0.1
GTLP_DCI	–	1.5	–	0.88	1	1.12	V_{REF} – 0.1	V_{REF} + 0.1
HSLVDCI_15	1.4	1.5	1.6	–	0.75	–	V_{REF} – 0.1	V_{REF} + 0.1
HSLVDCI_18	1.7	1.8	1.9	–	0.9	–	V_{REF} – 0.1	V_{REF} + 0.1
HSLVDCI_25	2.3	2.5	2.7	–	1.25	–	V_{REF} – 0.1	V_{REF} + 0.1
HSLVDCI_33	3.0	3.3	3.465	–	1.65	–	V_{REF} – 0.1	V_{REF} + 0.1
HSTL_I, HSTL_I_DCI	1.4	1.5	1.6	0.68	0.75	0.9	V_{REF} – 0.1	V_{REF} + 0.1
HSTL_III, HSTL_III_DCI	1.4	1.5	1.6	–	0.9	–	V_{REF} – 0.1	V_{REF} + 0.1
HSTL_I_18, HSTL_I_DCI_18	1.7	1.8	1.9	0.8	0.9	1.1	V_{REF} – 0.1	V_{REF} + 0.1
HSTL_II_18, HSTL_II_DCI_18	1.7	1.8	1.9	–	0.9	–	V_{REF} – 0.1	V_{REF} + 0.1
HSTL_III_18, HSTL_III_DCI_18	1.7	1.8	1.9	–	1.1	–	V_{REF} – 0.1	V_{REF} + 0.1
LVCMOS12	1.14	1.2	1.3	–	–	–	0.37V_{CCO}	0.58V_{CCO}
LVCMOS15, LVDCI_15, LVDCI_DV2_15	1.4	1.5	1.6	–	–	–	0.30V_{CCO}	0.70V_{CCO}
LVCMOS18, LVDCI_18, LVDCI_DV2_18	1.7	1.8	1.9	–	–	–	0.30V_{CCO}	0.70V_{CCO}
LVCMOS25[4,5], LVDCI_25, LVDCI_DV2_25[4]	2.3	2.5	2.7	–	–	–	0.7	1.7
LVCMOS33, LVDCI_33, LVDCI_DV2_33[4]	3.0	3.3	3.465	–	–	–	0.8	2.0
LVTTL	3.0	3.3	3.465	–	–	–	0.8	2.0
PCI33_3[7]	3.0	3.3	3.465	–	–	–	0.30V_{CCO}	0.50V_{CCO}
SSTL18_I, SSTL18_I_DCI	1.7	1.8	1.9	0.833	0.900	0.969	V_{REF} – 0.125	V_{REF} + 0.125
SSTL18_II	1.7	1.8	1.9	0.833	0.900	0.969	V_{REF} – 0.125	V_{REF} + 0.125
SSTL2_I, SSTL2_I_DCI	2.3	2.5	2.7	1.15	1.25	1.35	V_{REF} – 0.15	V_{REF} + 0.15
SSTL2_II, SSTL2_II_DCI	2.3	2.5	2.7	1.15	1.25	1.35	V_{REF} – 0.15	V_{REF} + 0.15

Notes:

1. Descriptions of the symbols used in this table are as follows:
   V_{CCO} – the supply voltage for output drivers as well as LVCMOS, LVTTL, and PCI inputs
   V_{REF} – the reference voltage for setting the input switching threshold
   V_{IL} – the input voltage that indicates a Low logic level
   V_{IH} – the input voltage that indicates a High logic level
2. For device operation, the maximum signal voltage (V_{IH} max) may be as high as V_{IN} max. See Table 28.
3. Because the GTL and GTLP standards employ open-drain output buffers, V_{CCO} lines do not supply current to the I/O circuit, rather this current is provided using an external pull-up resistor connected from the I/O pin to a termination voltage (V_{TT}). Nevertheless, the voltage applied to the associated V_{CCO} lines must always be at or above V_{TT} and I/O pad voltages.
4. There is approximately 100 mV of hysteresis on inputs using LVCMOS25 or LVCMOS33 standards.
5. All dedicated pins (M0-M2, CCLK, PROG_B, DONE, HSWAP_EN, TCK, TDI, TDO, and TMS) use the LVCMOS standard and draw power from the V_{CCAUX} rail (2.5V). The dual-purpose configuration pins (DIN/D0, D1-D7, CS_B, RDWR_B, BUSY/DOUT, and INIT_B) use the LVCMOS standard before the user mode. For these pins, apply 2.5V to the V_{CCO} Bank 4 and V_{CCO} Bank 5 rails at power-on and throughout configuration. For information concerning the use of 3.3V signals, see 3.3V-Tolerant Configuration Interface, page 47.
6. The Global Clock Inputs (GCLK0-GCLK7) are dual-purpose pins to which any signal standard can be assigned.
7. For more information, see XAPP457.

Table 36: **DC Characteristics of User I/Os Using Single-Ended Standards**

Signal Standard (IOSTANDARD) and Current Drive Attribute (mA)		Test Conditions		Logic Level Characteristics	
		I_{OL} (mA)	I_{OH} (mA)	V_{OL} Max (V)	V_{OH} Min (V)
GTL		32	–	0.4	–
GTL_DCI		Note 3	Note 3		
GTLP		36	–	0.6	–
GTLP_DCI		Note 3	Note 3		
HSLVDCI_15		Note 3	Note 3	0.4	V_{CCO} – 0.4
HSLVDCI_18					
HSLVDCI_25					
HSLVDCI_33					
HSTL_I		8	–8	0.4	V_{CCO} – 0.4
HSTL_I_DCI		Note 3	Note 3		
HSTL_III		24	–8	0.4	V_{CCO} – 0.4
HSTL_III_DCI		Note 3	Note 3		
HSTL_I_18		8	–8	0.4	V_{CCO} – 0.4
HSTL_I_DCI_18		Note 3	Note 3		
HSTL_II_18		16	–16	0.4	V_{CCO} – 0.4
HSTL_II_DCI_18		Note 3	Note 3		
HSTL_III_18		24	–8	0.4	V_{CCO} – 0.4
HSTL_III_DCI_18		Note 3	Note 3		
LVCMOS12[4]	2	2	–2	0.4	V_{CCO} – 0.4
	4	4	–4		
	6	6	–6		
LVCMOS15[4]	2	2	–2	0.4	V_{CCO} – 0.4
	4	4	–4		
	6	6	–6		
	8	8	–8		
	12	12	–12		
LVDCI_15, LVDCI_DV2_15		Note 3	Note 3		
LVCMOS18[4]	2	2	–2	0.4	V_{CCO} – 0.4
	4	4	–4		
	6	6	–6		
	8	8	–8		
	12	12	–12		
	16	16	–16		
LVDCI_18, LVDCI_DV2_18		Note 3	Note 3		
LVCMOS25[4,5]	2	2	–2	0.4	V_{CCO} – 0.4
	4	4	–4		
	6	6	–6		
	8	8	–8		
	12	12	–12		
	16	16	–16		
	24	24	–24		
LVDCI_25, LVDCI_DV2_25		Note 3	Note 3		

Table 36: **DC Characteristics of User I/Os Using Single-Ended Standards *(Cont'd)***

Signal Standard (IOSTANDARD) and Current Drive Attribute (mA)		Test Conditions		Logic Level Characteristics	
		I_{OL} (mA)	I_{OH} (mA)	V_{OL} Max (V)	V_{OH} Min (V)
LVCMOS33[4]	2	2	–2	0.4	V_{CCO} – 0.4
	4	4	–4		
	6	6	–6		
	8	8	–8		
	12	12	–12		
	16	16	–16		
	24	24	–24		
LVDCI_33, LVDCI_DV2_33		Note 3	Note 3		
LVTTL[4]	2	2	–2	0.4	2.4
	4	4	–4		
	6	6	–6		
	8	8	–8		
	12	12	–12		
	16	16	–16		
	24	24	–24		
PCI33_3		Note 6	Note 6	0.10V_{CCO}	0.90V_{CCO}
SSTL18_I		6.7	–6.7	V_{TT} – 0.475	V_{TT} + 0.475
SSTL18_I_DCI		Note 3	Note 3		
SSTL18_II		13.4	–13.4	V_{TT} – 0.475	V_{TT} + 0.475
SSTL2_I		8.1	–8.1	V_{TT} – 0.61	V_{TT} + 0.61
SSTL2_I_DCI		Note 3	Note 3		
SSTL2_II[7]		16.2	–16.2	V_{TT} – 0.81	V_{TT} + 0.81
SSTL2_II_DCI[7]		Note 3	Note 3		

Notes:

1. The numbers in this table are based on the conditions set forth in Table 32 and Table 35.
2. Descriptions of the symbols used in this table are as follows:
   I_{OL} – the output current condition under which VOL is tested
   I_{OH} – the output current condition under which VOH is tested
   V_{OL} – the output voltage that indicates a Low logic level
   V_{OH} – the output voltage that indicates a High logic level
   V_{IL} – the input voltage that indicates a Low logic level
   V_{IH} – the input voltage that indicates a High logic level
   V_{CCO} – the supply voltage for output drivers as well as LVCMOS, LVTTL, and PCI inputs
   V_{REF} – the reference voltage for setting the input switching threshold
   V_{TT} – the voltage applied to a resistor termination
3. Tested according to the standard's relevant specifications. When using the DCI version of a standard on a given I/O bank, that bank will consume more power than if the non-DCI version had been used instead. The additional power is drawn for the purpose of impedance-matching at the I/O pins. A portion of this power is dissipated in the two RREF resistors.
4. For the LVCMOS and LVTTL standards: the same V_{OL} and V_{OH} limits apply for both the Fast and Slow slew attributes.
5. All dedicated output pins (CCLK, DONE, and TDO) and dual-purpose totem-pole output pins (D0-D7 and BUSY/DOUT) exhibit the characteristics of LVCMOS25 with 12 mA drive and slow slew rate. For information concerning the use of 3.3V signals, see 3.3V-Tolerant Configuration Interface, page 47.
6. Tested according to the relevant PCI specifications. For more information, see XAPP457.
7. The minimum usable V_{TT} voltage is 1.25V.

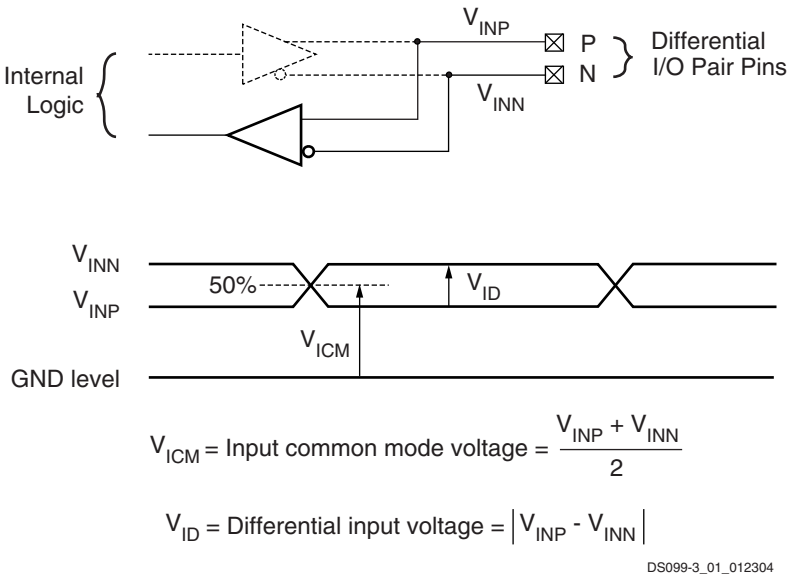

Figure 32: **Differential Input Voltages**

Table 37: **Recommended Operating Conditions for User I/Os Using Differential Signal Standards**

Signal Standard (IOSTANDARD)	V_{CCO}(1)			V_{ID}(3)			V_{ICM}		
	Min (V)	Nom (V)	Max (V)	Min (mV)	Nom (mV)	Max (mV)	Min (V)	Nom (V)	Max (V)
LDT_25 (ULVDS_25)	2.375	2.50	2.625	200	600	1000	0.44	0.60	0.78
LVDS_25, LVDS_25_DCI	2.375	2.50	2.625	100	350	600	0.30	1.25	2.20
BLVDS_25	2.375	2.50	2.625	-	350	-	-	1.25	-
LVDSEXT_25, LVDSEXT_25_DCI	2.375	2.50	2.625	100	540	1000	0.30	1.20	2.20
LVPECL_25	2.375	2.50	2.625	100	-	-	0.30	1.20	2.00
RSDS_25	2.375	2.50	2.625	100	200	-	-	1.20	-
DIFF_HSTL_II_18, DIFF_HSTL_II_18_DCI	1.70	1.80	1.90	200	-	-	0.80	-	1.00
DIFF_SSTL2_II, DIFF_SSTL2_II_DCI	2.375	2.50	2.625	300	-	-	1.05	-	1.45

Notes:

1. V_{CCO} only supplies differential output drivers, not input circuits.
2. V_{REF} inputs are not used for any of the differential I/O standards.
3. V_{ID} is a differential measurement.

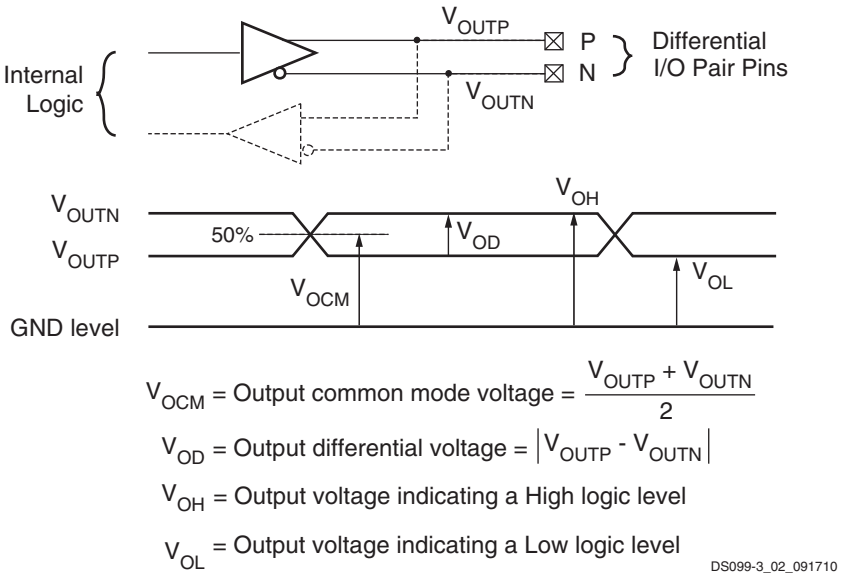

Figure 33: **Differential Output Voltages**

Table 38: **DC Characteristics of User I/Os Using Differential Signal Standards**

Signal Standard	Mask[3] Revision	V_{OD}			V_{OCM}			V_{OH}	V_{OL}
		Min (mV)	Typ (mV)	Max (mV)	Min (V)	Typ (V)	Max (V)	Min (V)	Max (V)
LDT_25 (ULVDS_25)	All	430[4]	600	670	0.495	0.600	0.715	0.71	0.50
LVDS_25	All	100	–	600	0.80	–	1.6	0.85	1.55
	'E'	200	–	500	1.0	–	1.5	1.10	1.40
BLVDS_25[5]	All	250	350	450	–	1.20	–	–	–
LVDSEXT_25	All	100	–	600	0.80	–	1.6	0.85	1.55
	'E'	300	–	700	1.0	–	1.5	1.15	1.35
LVPECL_25[5]	All	–	–	-	–	–	-	1.35	1.005
RSDS_25[6]	All	100	–	600	0.80	–	1.6	0.85	1.55
	'E'	200	–	500	1.0	–	1.5	1.10	1.40
DIFF_HSTL_II_18	All	–	–	–	–	–	–	V_{CCO} – 0.40	0.40
DIFF_SSTL2_II	All	–	–	–	–	–	–	V_{TT} + 0.80	V_{TT} – 0.80

Notes:
1. The numbers in this table are based on the conditions set forth in Table 32 and Table 37.
2. Output voltage measurements for all differential standards are made with a termination resistor (R_T) of 100Ω across the N and P pins of the differential signal pair.
3. Mask revision E devices have tighter output ranges but can be used in any design that was in a previous revision. See Mask and Fab Revisions, page 58.
4. This value must be compatible with the receiver to which the FPGA's output pair is connected.
5. Each LVPECL_25 or BLVDS_25 output-pair requires three external resistors for proper output operation as shown in Figure 34. Each LVPECL_25 or BLVDS_25 input-pair uses a 100W termination resistor at the receiver.
6. Only one of the differential standards RSDS_25, LDT_25, LVDS_25, and LVDSEXT_25 may be used for outputs within a bank. Each differential standard input-pair requires an external 100Ω termination resistor.

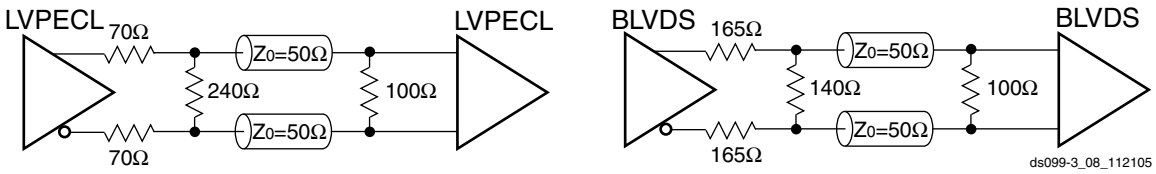

Figure 34: **External Termination Required for LVPECL and BLVDS Output and Input**

Switching Characteristics

All Spartan-3 devices are available in two speed grades: –4 and the higher performance –5. Switching characteristics in this document may be designated as Advance, Preliminary, or Production. Each category is defined as follows:

Advance: These specifications are based on simulations only and are typically available soon after establishing FPGA specifications. Although speed grades with this designation are considered relatively stable and conservative, some under-reported delays may still occur.

Preliminary: These specifications are based on complete early silicon characterization. Devices and speed grades with this designation are intended to give a better indication of the expected performance of production silicon. The probability of under-reporting preliminary delays is greatly reduced compared to Advance data.

Production: These specifications are approved once enough production silicon of a particular device family member has been characterized to provide full correlation between speed files and devices over numerous production lots. There is no under-reporting of delays, and customers receive formal notification of any subsequent changes. Typically, the slowest speed grades transition to Production before faster speed grades.

Production-quality systems must use FPGA designs compiled using a Production status speed file. FPGAs designs using a less mature speed file designation may only be used during system prototyping or preproduction qualification. FPGA designs using Advance or Preliminary status speed files should never be used in a production-quality system.

Whenever a speed file designation changes, as a device matures toward Production status, rerun the Xilinx ISE software on the FPGA design to ensure that the FPGA design incorporates the latest timing information and software updates.

Xilinx ISE Software Updates: http://www.xilinx.com/support/download/index.htm

All specified limits are representative of worst-case supply voltage and junction temperature conditions. Unless otherwise noted, the following applies: Parameter values apply to all Spartan-3 devices. All parameters representing voltages are measured with respect to GND.

Selected timing parameters and their representative values are included below either because they are important as general design requirements or they indicate fundamental device performance characteristics. The Spartan-3 FPGA v1.38 speed files are the original source for many but not all of the values. The v1.38 speed files are available in Xilinx Integrated Software Environment (ISE) software version 8.2i.

The speed grade designations for these files are shown in Table 39. For more complete, more precise, and worst-case data, use the values reported by the Xilinx static timing analyzer (TRACE in the Xilinx development software) and back-annotated to the simulation netlist.

Table 39: **Spartan-3 FPGA Speed Grade Designations (ISE v8.2i or Later)**

Device	Advance	Preliminary	Production
XC3S50			-4, -5 (v1.37 and later)
XC3S200			
XC3S400			
XC3S1000			
XC3S1500			
XC3S2000			
XC3S4000			
XC3S5000			-4, -5 (v1.38 and later)

I/O Timing

Table 40: **Pin-to-Pin Clock-to-Output Times for the IOB Output Path**

Symbol	Description	Conditions	Device	Speed Grade -5 Max[2]	Speed Grade -4 Max[2]	Units
Clock-to-Output Times						
$T_{ICKOFDCM}$	When reading from the Output Flip-Flop (OFF), the time from the active transition on the Global Clock pin to data appearing at the Output pin. The DCM is in use.	LVCMOS25[3], 12 mA output drive, Fast slew rate, with DCM[4]	XC3S50	2.04	2.35	ns
			XC3S200	1.45	1.75	ns
			XC3S400	1.45	1.75	ns
			XC3S1000	2.07	2.39	ns
			XC3S1500	2.05	2.36	ns
			XC3S2000	2.03	2.34	ns
			XC3S4000	1.94	2.24	ns
			XC3S5000	2.00	2.30	ns
T_{ICKOF}	When reading from OFF, the time from the active transition on the Global Clock pin to data appearing at the Output pin. The DCM is not in use.	LVCMOS25[3], 12 mA output drive, Fast slew rate, without DCM	XC3S50	3.70	4.24	ns
			XC3S200	3.89	4.46	ns
			XC3S400	3.91	4.48	ns
			XC3S1000	4.00	4.59	ns
			XC3S1500	4.07	4.66	ns
			XC3S2000	4.19	4.80	ns
			XC3S4000	4.44	5.09	ns
			XC3S5000	4.38	5.02	ns

Notes:

1. The numbers in this table are tested using the methodology presented in Table 48 and are based on the operating conditions set forth in Table 32 and Table 35.
2. For minimums, use the values reported by the Xilinx timing analyzer.
3. This clock-to-output time requires adjustment whenever a signal standard other than LVCMOS25 is assigned to the Global Clock Input or a standard other than LVCMOS25 with 12 mA drive and Fast slew rate is assigned to the data Output. If the former is true, *add* the appropriate Input adjustment from Table 44. If the latter is true, *add* the appropriate Output adjustment from Table 47.
4. DCM output jitter is included in all measurements.

Table 41: **System-Synchronous Pin-to-Pin Setup and Hold Times for the IOB Input Path**

Symbol	Description	Conditions	Device	Speed Grade -5 Min	Speed Grade -4 Min	Units
Setup Times						
T_{PSDCM}	When writing to the Input Flip-Flop (IFF), the time from the setup of data at the Input pin to the active transition at a Global Clock pin. The DCM is in use. No Input Delay is programmed.	LVCMOS25[2], IOBDELAY = NONE, with DCM[4]	XC3S50	2.37	2.71	ns
			XC3S200	2.13	2.35	ns
			XC3S400	2.15	2.36	ns
			XC3S1000	2.58	2.95	ns
			XC3S1500	2.55	2.91	ns
			XC3S2000	2.59	2.96	ns
			XC3S4000	2.76	3.15	ns
			XC3S5000	2.69	3.08	ns
T_{PSFD}	When writing to IFF, the time from the setup of data at the Input pin to an active transition at the Global Clock pin. The DCM is not in use. The Input Delay is programmed.	LVCMOS25[2], IOBDELAY = IFD, without DCM	XC3S50	3.00	3.46	ns
			XC3S200	2.63	3.02	ns
			XC3S400	2.50	2.87	ns
			XC3S1000	3.50	4.03	ns
			XC3S1500	3.78	4.35	ns
			XC3S2000	4.98	5.73	ns
			XC3S4000	5.25	6.05	ns
			XC3S5000	5.37	6.18	ns
Hold Times						
T_{PHDCM}	When writing to IFF, the time from the active transition at the Global Clock pin to the point when data must be held at the Input pin. The DCM is in use. No Input Delay is programmed.	LVCMOS25[3], IOBDELAY = NONE, with DCM[4]	XC3S50	–0.45	–0.40	ns
			XC3S200	–0.12	–0.05	ns
			XC3S400	–0.12	–0.05	ns
			XC3S1000	–0.43	–0.38	ns
			XC3S1500	–0.45	–0.40	ns
			XC3S2000	–0.47	–0.42	ns
			XC3S4000	–0.61	–0.56	ns
			XC3S5000	–0.62	–0.57	ns

Table 41: **System-Synchronous Pin-to-Pin Setup and Hold Times for the IOB Input Path *(Cont'd)***

Symbol	Description	Conditions	Device	Speed Grade -5 Min	Speed Grade -4 Min	Units
T_{PHFD}	When writing to IFF, the time from the active transition at the Global Clock pin to the point when data must be held at the Input pin. The DCM is not in use. The Input Delay is programmed.	LVCMOS25[(3)], IOBDELAY = IFD, without DCM	XC3S50	–0.98	–0.93	ns
			XC3S200	–0.40	–0.35	ns
			XC3S400	–0.27	–0.22	ns
			XC3S1000	–1.19	–1.14	ns
			XC3S1500	–1.43	–1.38	ns
			XC3S2000	–2.33	–2.28	ns
			XC3S4000	–2.47	–2.42	ns
			XC3S5000	–2.66	–2.61	ns

Notes:

1. The numbers in this table are tested using the methodology presented in Table 48 and are based on the operating conditions set forth in Table 32 and Table 35.
2. This setup time requires adjustment whenever a signal standard other than LVCMOS25 is assigned to the Global Clock Input or the data Input. If this is true of the Global Clock Input, *subtract* the appropriate adjustment from Table 44. If this is true of the data Input, *add* the appropriate Input adjustment from the same table.
3. This hold time requires adjustment whenever a signal standard other than LVCMOS25 is assigned to the Global Clock Input or the data Input. If this is true of the Global Clock Input, *add* the appropriate Input adjustment from Table 44. If this is true of the data Input, *subtract* the appropriate Input adjustment from the same table. When the hold time is negative, it is possible to change the data before the clock's active edge.
4. DCM output jitter is included in all measurements.

Table 42: **Setup and Hold Times for the IOB Input Path**

Symbol	Description	Conditions	Device	Speed Grade -5 Min	Speed Grade -4 Min	Units
Setup Times						
T_{IOPICK}	Time from the setup of data at the Input pin to the active transition at the ICLK input of the Input Flip-Flop (IFF). No Input Delay is programmed.	LVCMOS25[(2)], IOBDELAY = NONE	XC3S50	1.65	1.89	ns
			XC3S200	1.37	1.57	ns
			XC3S400	1.37	1.57	ns
			XC3S1000	1.65	1.89	ns
			XC3S1500	1.65	1.89	ns
			XC3S2000	1.65	1.89	ns
			XC3S4000	1.73	1.99	ns
			XC3S5000	1.82	2.09	ns
$T_{IOPICKD}$	Time from the setup of data at the Input pin to the active transition at the IFF's ICLK input. The Input Delay is programmed.	LVCMOS25[(2)], IOBDELAY = IFD	XC3S50	4.39	5.04	ns
			XC3S200	4.76	5.47	ns
			XC3S400	4.63	5.32	ns
			XC3S1000	5.02	5.76	ns
			XC3S1500	5.40	6.20	ns
			XC3S2000	6.68	7.68	ns
			XC3S4000	7.16	8.24	ns
			XC3S5000	7.33	8.42	ns

Table 42: **Setup and Hold Times for the IOB Input Path *(Cont'd)***

Symbol	Description	Conditions	Device	Speed Grade -5 Min	Speed Grade -4 Min	Units
Hold Times						
T_{IOICKP}	Time from the active transition at the IFF's ICLK input to the point where data must be held at the Input pin. No Input Delay is programmed.	LVCMOS25[3], IOBDELAY = NONE	XC3S50	-0.55	-0.55	ns
			XC3S200	-0.29	-0.29	ns
			XC3S400	-0.29	-0.29	ns
			XC3S1000	-0.55	-0.55	ns
			XC3S1500	-0.55	-0.55	ns
			XC3S2000	-0.55	-0.55	ns
			XC3S4000	-0.61	-0.61	ns
			XC3S5000	-0.68	-0.68	ns
$T_{IOICKPD}$	Time from the active transition at the IFF's ICLK input to the point where data must be held at the Input pin. The Input Delay is programmed.	LVCMOS25[3], IOBDELAY = IFD	XC3S50	-2.74	-2.74	ns
			XC3S200	-3.00	-3.00	ns
			XC3S400	-2.90	-2.90	ns
			XC3S1000	-3.24	-3.24	ns
			XC3S1500	-3.55	-3.55	ns
			XC3S2000	-4.57	-4.57	ns
			XC3S4000	-4.96	-4.96	ns
			XC3S5000	-5.09	-5.09	ns
Set/Reset Pulse Width						
T_{RPW_IOB}	Minimum pulse width to SR control input on IOB		All	0.66	0.76	ns

Notes:

1. The numbers in this table are tested using the methodology presented in Table 48 and are based on the operating conditions set forth in Table 32 and Table 35.
2. This setup time requires adjustment whenever a signal standard other than LVCMOS25 is assigned to the data Input. If this is true, add the appropriate Input adjustment from Table 44.
3. These hold times require adjustment whenever a signal standard other than LVCMOS25 is assigned to the data Input. If this is true, subtract the appropriate Input adjustment from Table 44. When the hold time is negative, it is possible to change the data before the clock's active edge.

Table 43: **Propagation Times for the IOB Input Path**

Symbol	Description	Conditions	Device	Speed Grade -5 Max	Speed Grade -4 Max	Units
Propagation Times						
T_{IOPLI}	The time it takes for data to travel from the Input pin through the IFF latch to the I output with no input delay programmed	LVCMOS25[(2)], IOBDELAY = NONE	XC3S50	2.01	2.31	ns
			XC3S200	1.50	1.72	ns
			XC3S400	1.50	1.72	ns
			XC3S1000	2.01	2.31	ns
			XC3S1500	2.01	2.31	ns
			XC3S2000	2.01	2.31	ns
			XC3S4000	2.09	2.41	ns
			XC3S5000	2.18	2.51	ns
T_{IOPLID}	The time it takes for data to travel from the Input pin through the IFF latch to the I output with the input delay programmed	LVCMOS25[(2)], IOBDELAY = IFD	XC3S50	4.75	5.46	ns
			XC3S200	4.89	5.62	ns
			XC3S400	4.76	5.48	ns
			XC3S1000	5.38	6.18	ns
			XC3S1500	5.76	6.62	ns
			XC3S2000	7.04	8.09	ns
			XC3S4000	7.52	8.65	ns
			XC3S5000	7.69	8.84	ns

Notes:

1. The numbers in this table are tested using the methodology presented in Table 48 and are based on the operating conditions set forth in Table 32 and Table 35.
2. This propagation time requires adjustment whenever a signal standard other than LVCMOS25 is assigned to the data Input. When this is true, *add* the appropriate Input adjustment from Table 44.

Table 44: **Input Timing Adjustments for IOB**

Convert Input Time from LVCMOS25 to the Following Signal Standard (IOSTANDARD)	Add the Adjustment Below Speed Grade -5	Add the Adjustment Below Speed Grade -4	Units
Single-Ended Standards			
GTL, GTL_DCI	0.44	0.50	ns
GTLP, GTLP_DCI	0.36	0.42	ns
HSLVDCI_15	0.51	0.59	ns
HSLVDCI_18	0.29	0.33	ns
HSLVDCI_25	0.51	0.59	ns
HSLVDCI_33	0.51	0.59	ns
HSTL_I, HSTL_I_DCI	0.51	0.59	ns
HSTL_III, HSTL_III_DCI	0.37	0.42	ns
HSTL_I_18, HSTL_I_DCI_18	0.36	0.41	ns
HSTL_II_18, HSTL_II_DCI_18	0.39	0.45	ns
HSTL_III_18, HSTL_III_DCI_18	0.45	0.52	ns
LVCMOS12	0.63	0.72	ns

Table 44: **Input Timing Adjustments for IOB *(Cont'd)***

Convert Input Time from LVCMOS25 to the Following Signal Standard (IOSTANDARD)	Add the Adjustment Below		Units
	Speed Grade		
	-5	-4	
LVCMOS15	0.42	0.49	ns
LVDCI_15	0.38	0.43	ns
LVDCI_DV2_15	0.38	0.44	ns
LVCMOS18	0.24	0.28	ns
LVDCI_18	0.29	0.33	ns
LVDCI_DV2_18	0.28	0.33	ns
LVCMOS25	0	0	ns
LVDCI_25	0.05	0.05	ns
LVDCI_DV2_25	0.04	0.04	ns
LVCMOS33, LVDCI_33, LVDCI_DV2_33	–0.05	–0.02	ns
LVTTL	0.18	0.21	ns
PCI33_3	0.20	0.22	ns
SSTL18_I, SSTL18_I_DCI	0.39	0.45	ns
SSTL18_II	0.39	0.45	ns
SSTL2_I, SSTL2_I_DCI	0.40	0.46	ns
SSTL2_II, SSTL2_II_DCI	0.36	0.41	ns
Differential Standards			
LDT_25 (ULVDS_25)	0.76	0.88	ns
LVDS_25, LVDS_25_DCI	0.65	0.75	ns
BLVDS_25	0.34	0.39	ns
LVDSEXT_25, LVDSEXT_25_DCI	0.80	0.92	ns
LVPECL_25	0.18	0.21	ns
RSDS_25	0.43	0.50	ns
DIFF_HSTL_II_18, DIFF_HSTL_II_18_DCI	0.34	0.39	ns
DIFF_SSTL2_II, DIFF_SSTL2_II_DCI	0.65	0.75	ns

Notes:

1. The numbers in this table are tested using the methodology presented in Table 48 and are based on the operating conditions set forth in Table 32, Table 35, and Table 37.
2. These adjustments are used to convert input path times originally specified for the LVCMOS25 standard to times that correspond to other signal standards.

Table 45: **Timing for the IOB Output Path**

Symbol	Description	Conditions	Device	Speed Grade -5 Max(3)	Speed Grade -4 Max(3)	Units
Clock-to-Output Times						
T_{IOCKP}	When reading from the Output Flip-Flop (OFF), the time from the active transition at the OTCLK input to data appearing at the Output pin	LVCMOS25(2), 12 mA output drive, Fast slew rate	XC3S200 XC3S400	1.28	1.47	ns
			XC3S50 XC3S1000 XC3S1500 XC3S2000 XC3S4000 XC3S5000	1.95	2.24	ns
Propagation Times						
T_{IOOP}	The time it takes for data to travel from the IOB's O input to the Output pin	LVCMOS25(2), 12 mA output drive, Fast slew rate	XC3S200 XC3S400	1.28	1.46	ns
			XC3S50 XC3S1000 XC3S1500 XC3S2000 XC3S4000 XC3S5000	1.94	2.23	ns
T_{IOOLP}	The time it takes for data to travel from the O input through the OFF latch to the Output pin		XC3S200 XC3S400	1.28	1.47	ns
			XC3S50 XC3S1000 XC3S1500 XC3S2000 XC3S4000 XC3S5000	1.95	2.24	ns
Set/Reset Times						
T_{IOSRP}	Time from asserting the OFF's SR input to setting/resetting data at the Output pin	LVCMOS25(2), 12 mA output drive, Fast slew rate	XC3S200 XC3S400	2.10	2.41	ns
			XC3S50 XC3S1000 XC3S1500 XC3S2000 XC3S4000 XC3S5000	2.77	3.18	ns
T_{IOGSRQ}	Time from asserting the Global Set Reset (GSR) net to setting/resetting data at the Output pin		All	8.07	9.28	ns

Notes:

1. The numbers in this table are tested using the methodology presented in Table 48 and are based on the operating conditions set forth in Table 32 and Table 35.
2. This time requires adjustment whenever a signal standard other than LVCMOS25 with 12 mA drive and Fast slew rate is assigned to the data Output. When this is true, *add* the appropriate Output adjustment from Table 47.
3. For minimums, use the values reported by the Xilinx timing analyzer.

Table 46: **Timing for the IOB Three-State Path**

Symbol	Description	Conditions	Device	Speed Grade -5 Max(3)	Speed Grade -4 Max(3)	Units
Synchronous Output Enable/Disable Times						
T_{IOCKHZ}	Time from the active transition at the OTCLK input of the Three-state Flip-Flop (TFF) to when the Output pin enters the high-impedance state	LVCMOS25, 12 mA output drive, Fast slew rate	All	0.74	0.85	ns
T_{IOCKON}(2)	Time from the active transition at TFF's OTCLK input to when the Output pin drives valid data		All	0.72	0.82	ns
Asynchronous Output Enable/Disable Times						
T_{GTS}	Time from asserting the Global Three State (GTS) net to when the Output pin enters the high-impedance state	LVCMOS25, 12 mA output drive, Fast slew rate	XC3S200 XC3S400	7.71	8.87	ns
			XC3S50 XC3S1000 XC3S1500 XC3S2000 XC3S4000 XC3S5000	8.38	9.63	ns
Set/Reset Times						
T_{IOSRHZ}	Time from asserting TFF's SR input to when the Output pin enters a high-impedance state	LVCMOS25, 12 mA output drive, Fast slew rate	All	1.55	1.78	ns
T_{IOSRON}(2)	Time from asserting TFF's SR input at TFF to when the Output pin drives valid data		XC3S200 XC3S400	2.24	2.57	ns
			XC3S50 XC3S1000 XC3S1500 XC3S2000 XC3S4000 XC3S5000	2.91	3.34	ns

Notes:

1. The numbers in this table are tested using the methodology presented in Table 48 and are based on the operating conditions set forth in Table 32 and Table 35.
2. This time requires adjustment whenever a signal standard other than LVCMOS25 with 12 mA drive and Fast slew rate is assigned to the data Output. When this is true, *add* the appropriate Output adjustment from Table 47.
3. For minimums, use the values reported by the Xilinx timing analyzer.

Table 47: **Output Timing Adjustments for IOB**

Convert Output Time from LVCMOS25 with 12mA Drive and Fast Slew Rate to the Following Signal Standard (IOSTANDARD)	Add the Adjustment Below Speed Grade -5	Add the Adjustment Below Speed Grade -4	Units
Single-Ended Standards			
GTL	0	0.02	ns
GTL_DCI	0.13	0.15	ns
GTLP	0.03	0.04	ns
GTLP_DCI	0.23	0.27	ns
HSLVDCI_15	1.51	1.74	ns
HSLVDCI_18	0.81	0.94	ns

Table 47: **Output Timing Adjustments for IOB *(Cont'd)***

Convert Output Time from LVCMOS25 with 12mA Drive and Fast Slew Rate to the Following Signal Standard (IOSTANDARD)			Add the Adjustment Below		Units
			Speed Grade		
			-5	-4	
HSLVDCI_25			0.27	0.31	ns
HSLVDCI_33			0.28	0.32	ns
HSTL_I			0.60	0.69	ns
HSTL_I_DCI			0.59	0.68	ns
HSTL_III			0.19	0.22	ns
HSTL_III_DCI			0.20	0.23	ns
HSTL_I_18			0.18	0.21	ns
HSTL_I_DCI_18			0.17	0.19	ns
HSTL_II_18			–0.02	–0.01	ns
HSTL_II_DCI_18			0.75	0.86	ns
HSTL_III_18			0.28	0.32	ns
HSTL_III_DCI_18			0.28	0.32	ns
LVCMOS12	Slow	2 mA	7.60	8.73	ns
		4 mA	7.42	8.53	ns
		6 mA	6.67	7.67	ns
	Fast	2 mA	3.16	3.63	ns
		4 mA	2.70	3.10	ns
		6 mA	2.41	2.77	ns
LVCMOS15	Slow	2 mA	4.55	5.23	ns
		4 mA	3.76	4.32	ns
		6 mA	3.57	4.11	ns
		8 mA	3.55	4.09	ns
		12 mA	3.00	3.45	ns
	Fast	2 mA	3.11	3.57	ns
		4 mA	1.71	1.96	ns
		6 mA	1.44	1.66	ns
		8 mA	1.26	1.44	ns
		12 mA	1.11	1.27	ns
LVDCI_15			1.51	1.74	ns
LVDCI_DV2_15			1.32	1.52	ns

Table 47: **Output Timing Adjustments for IOB *(Cont'd)***

Convert Output Time from LVCMOS25 with 12mA Drive and Fast Slew Rate to the Following Signal Standard (IOSTANDARD)			Add the Adjustment Below		Units
			Speed Grade		
			-5	-4	
LVCMOS18	Slow	2 mA	5.49	6.31	ns
		4 mA	3.45	3.97	ns
		6 mA	2.84	3.26	ns
		8 mA	2.62	3.01	ns
		12 mA	2.11	2.43	ns
		16 mA	2.07	2.38	ns
	Fast	2 mA	2.50	2.88	ns
		4 mA	1.15	1.32	ns
		6 mA	0.96	1.10	ns
		8 mA	0.87	1.01	ns
		12 mA	0.79	0.91	ns
		16 mA	0.76	0.87	ns
LVDCI_18			0.81	0.94	ns
LVDCI_DV2_18			0.67	0.77	ns
LVCMOS25	Slow	2 mA	6.43	7.39	ns
		4 mA	4.15	4.77	ns
		6 mA	3.38	3.89	ns
		8 mA	2.99	3.44	ns
		12 mA	2.53	2.91	ns
		16 mA	2.50	2.87	ns
		24 mA	2.22	2.55	ns
	Fast	2 mA	3.27	3.76	ns
		4 mA	1.87	2.15	ns
		6 mA	0.32	0.37	ns
		8 mA	0.19	0.22	ns
		12 mA	0	0	ns
		16 mA	–0.02	–0.01	ns
		24 mA	–0.04	–0.02	ns
LVDCI_25			0.27	0.31	ns
LVDCI_DV2_25			0.16	0.19	ns

Table 47: **Output Timing Adjustments for IOB *(Cont'd)***

Convert Output Time from LVCMOS25 with 12mA Drive and Fast Slew Rate to the Following Signal Standard (IOSTANDARD)			Add the Adjustment Below		Units
			Speed Grade		
			-5	-4	
LVCMOS33	Slow	2 mA	6.38	7.34	ns
		4 mA	4.83	5.55	ns
		6 mA	4.01	4.61	ns
		8 mA	3.92	4.51	ns
		12 mA	2.91	3.35	ns
		16 mA	2.81	3.23	ns
		24 mA	2.49	2.86	ns
	Fast	2 mA	3.86	4.44	ns
		4 mA	1.87	2.15	ns
		6 mA	0.62	0.71	ns
		8 mA	0.61	0.70	ns
		12 mA	0.16	0.19	ns
		16 mA	0.14	0.16	ns
		24 mA	0.06	0.07	ns
LVDCI_33			0.28	0.32	ns
LVDCI_DV2_33			0.26	0.30	ns
LVTTL	Slow	2 mA	7.27	8.36	ns
		4 mA	4.94	5.69	ns
		6 mA	3.98	4.58	ns
		8 mA	3.98	4.58	ns
		12 mA	2.97	3.42	ns
		16 mA	2.84	3.26	ns
		24 mA	2.65	3.04	ns
	Fast	2 mA	4.32	4.97	ns
		4 mA	1.87	2.15	ns
		6 mA	1.27	1.47	ns
		8 mA	1.19	1.37	ns
		12 mA	0.42	0.48	ns
		16 mA	0.27	0.32	ns
		24 mA	0.16	0.18	ns

Table 47: **Output Timing Adjustments for IOB *(Cont'd)***

Convert Output Time from LVCMOS25 with 12mA Drive and Fast Slew Rate to the Following Signal Standard (IOSTANDARD)	Add the Adjustment Below		Units
	Speed Grade		
	-5	-4	
PCI33_3	0.74	0.85	ns
SSTL18_I	0.07	0.07	ns
SSTL18_I_DCI	0.22	0.25	ns
SSTL18_II	0.30	0.34	ns
SSTL2_I	0.23	0.26	ns
SSTL2_I_DCI	0.19	0.22	ns
SSTL2_II	0.13	0.15	ns
SSTL2_II_DCI	0.10	0.11	ns
Differential Standards			
LDT_25 (ULVDS_25)	–0.06	–0.05	ns
LVDS_25	–0.09	–0.07	ns
BLVDS_25	0.02	0.04	ns
LVDSEXT_25	–0.15	–0.13	ns
LVPECL_25	0.16	0.18	ns
RSDS_25	0.05	0.06	ns
DIFF_HSTL_II_18	–0.02	–0.01	ns
DIFF_HSTL_II_18_DCI	0.75	0.86	ns
DIFF_SSTL2_II	0.13	0.15	ns
DIFF_SSTL2_II_DCI	0.10	0.11	ns

Notes:

1. The numbers in this table are tested using the methodology presented in Table 48 and are based on the operating conditions set forth in Table 32, Table 35, and Table 37.
2. These adjustments are used to convert output- and three-state-path times originally specified for the LVCMOS25 standard with 12 mA drive and Fast slew rate to times that correspond to other signal standards. Do not adjust times that measure when outputs go into a high-impedance state.
3. For minimums, use the values reported by the Xilinx timing analyzer.

Timing Measurement Methodology

When measuring timing parameters at the programmable I/Os, different signal standards call for different test conditions. Table 48 presents the conditions to use for each standard.

The method for measuring Input timing is as follows: A signal that swings between a Low logic level of V_L and a High logic level of V_H is applied to the Input under test. Some standards also require the application of a bias voltage to the V_{REF} pins of a given bank to properly set the input-switching threshold. The measurement point of the Input signal (V_M) is commonly located halfway between V_L and V_H.

The Output test setup is shown in Figure 35. A termination voltage V_T is applied to the termination resistor R_T, the other end of which is connected to the Output. For each standard, R_T and V_T generally take on the standard values recommended for minimizing signal reflections. If the standard does not ordinarily use terminations (e.g., LVCMOS, LVTTL), then R_T is set to 1MΩ to indicate an open connection, and V_T is set to zero. The same measurement point (V_M) that was used at the Input is also used at the Output.

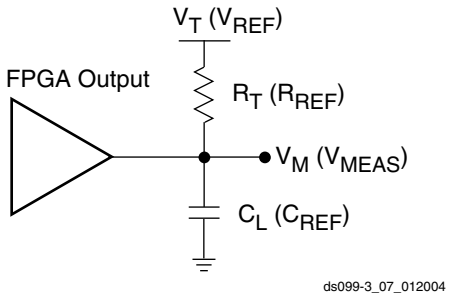

Notes:

1. The names shown in parentheses are used in the IBIS file.

Figure 35: **Output Test Setup**

Table 48: **Test Methods for Timing Measurement at I/Os**

Signal Standard (IOSTANDARD)	Inputs			Outputs		Inputs and Outputs
	V_{REF} (V)	V_L (V)	V_H (V)	R_T (Ω)	V_T (V)	V_M (V)
Single-Ended						
GTL	0.8	V_{REF} – 0.2	V_{REF} + 0.2	25	1.2	V_{REF}
GTL_DCI				50	1.2	
GTLP	1.0	V_{REF} – 0.2	V_{REF} + 0.2	25	1.5	V_{REF}
GTLP_DCI				50	1.5	
HSLVDCI_15	0.9	V_{REF} – 0.5	V_{REF} + 0.5	1M	0	0.75
HSLVDCI_18						0.90
HSLVDCI_25						1.25
HSLVDCI_33						1.65
HSTL_I	0.75	V_{REF} – 0.5	V_{REF} + 0.5	50	0.75	V_{REF}
HSTL_I_DCI						
HSTL_III	0.90	V_{REF} – 0.5	V_{REF} + 0.5	50	1.5	V_{REF}
HSTL_III_DCI						
HSTL_I_18	0.90	V_{REF} – 0.5	V_{REF} + 0.5	50	0.9	V_{REF}
HSTL_I_DCI_18						
HSTL_II_18	0.90	V_{REF} – 0.5	V_{REF} + 0.5	50	0.9	V_{REF}
HSTL_II_DCI_18						

Table 48: **Test Methods for Timing Measurement at I/Os *(Cont'd)***

Signal Standard (IOSTANDARD)		Inputs			Outputs		Inputs and Outputs
		V_{REF} (V)	V_L (V)	V_H (V)	R_T (Ω)	V_T (V)	V_M (V)
HSTL_III_18		1.1	V_{REF} – 0.5	V_{REF} + 0.5	50	1.8	V_{REF}
HSTL_III_DCI_18							
LVCMOS12		-	0	1.2	1M	0	0.6
LVCMOS15		-	0	1.5	1M	0	0.75
LVDCI_15							
LVDCI_DV2_15							
HSLVDCI_15							
LVCMOS18		-	0	1.8	1M	0	0.9
LVDCI_18							
LVDCI_DV2_18							
HSLVDCI_18							
LVCMOS25		-	0	2.5	1M	0	1.25
LVDCI_25							
LVDCI_DV2_25							
HSLVDCI_25							
LVCMOS33		-	0	3.3	1M	0	1.65
LVDCI_33							
LVDCI_DV2_33							
HSLVDCI_33							
LVTTL		-	0	3.3	1M	0	1.4
PCI33_3	Rising	-	Note 3	Note 3	25	0	0.94
	Falling				25	3.3	2.03
SSTL18_I		0.9	V_{REF} – 0.5	V_{REF} + 0.5	50	0.9	V_{REF}
SSTL18_I_DCI							
SSTL18_II		0.9	V_{REF} – 0.5	V_{REF} + 0.5	50	0.9	V_{REF}
SSTL2_I		1.25	V_{REF} – 0.75	V_{REF} + 0.75	50	1.25	V_{REF}
SSTL2_I_DCI							
SSTL2_II		1.25	V_{REF} – 0.75	V_{REF} + 0.75	25	1.25	V_{REF}
SSTL2_II_DCI					50	1.25	
Differential							
LDT_25 (ULVDS_25)		-	V_{ICM} – 0.125	V_{ICM} + 0.125	60	0.6	V_{ICM}
LVDS_25		-	V_{ICM} – 0.125	V_{ICM} + 0.125	50	1.2	V_{ICM}
LVDS_25_DCI					N/A	N/A	
BLVDS_25		-	V_{ICM} – 0.125	V_{ICM} + 0.125	1M	0	V_{ICM}
LVDSEXT_25		-	V_{ICM} – 0.125	V_{ICM} + 0.125	50	1.2	V_{ICM}
LVDSEXT_25_DCI					N/A	N/A	
LVPECL_25		-	V_{ICM} – 0.3	V_{ICM} + 0.3	1M	0	V_{ICM}
RSDS_25		-	V_{ICM} – 0.1	V_{ICM} + 0.1	50	1.2	V_{ICM}
DIFF_HSTL_II_18		-	V_{ICM} – 0.5	V_{ICM} + 0.5	50	1.8	V_{ICM}
DIFF_HSTL_II_18_DCI							

Table 48: **Test Methods for Timing Measurement at I/Os *(Cont'd)***

Signal Standard (IOSTANDARD)	Inputs			Outputs		Inputs and Outputs
	V_{REF} (V)	V_L (V)	V_H (V)	R_T (Ω)	V_T (V)	V_M (V)
DIFF_SSTL2_II	-	V_{ICM} – 0.75	V_{ICM} + 0.75	50	1.25	V_{ICM}
DIFF_SSTL2_II_DCI						

Notes:

1. Descriptions of the relevant symbols are as follows:
   VREF – The reference voltage for setting the input switching threshold
   VICM – The common mode input voltage
   VM – Voltage of measurement point on signal transition
   VL – Low-level test voltage at Input pin
   VH – High-level test voltage at Input pin
   RT – Effective termination resistance, which takes on a value of 1MW when no parallel termination is required
   VT – Termination voltage
2. The load capacitance (CL) at the Output pin is 0 pF for all signal standards.
3. According to the PCI specification.

The capacitive load (C_L) is connected between the output and GND. *The Output timing for all standards, as published in the speed files and the data sheet, is always based on a C_L value of zero.* High-impedance probes (less than 1 pF) are used for all measurements. Any delay that the test fixture might contribute to test measurements is subtracted from those measurements to produce the final timing numbers as published in the speed files and data sheet.

Using IBIS Models to Simulate Load Conditions in Application

IBIS Models permit the most accurate prediction of timing delays for a given application. The parameters found in the IBIS model (V_{REF}, R_{REF}, and V_{MEAS}) correspond directly with the parameters used in Table 48, V_T, R_T, and V_M. Do not confuse V_{REF} (the termination voltage) from the IBIS model with V_{REF} (the input-switching threshold) from the table. A fourth parameter, C_{REF}, is always zero. The four parameters describe all relevant output test conditions. IBIS models are found in the Xilinx development software as well as at the following link.

http://www.xilinx.com/support/download/index.htm

Simulate delays for a given application according to its specific load conditions as follows:

1. Simulate the desired signal standard with the output driver connected to the test setup shown in Figure 35. Use parameter values V_T, R_T, and V_M from Table 48. C_{REF} is zero.
2. Record the time to V_M.
3. Simulate the same signal standard with the output driver connected to the PCB trace with load. Use the appropriate IBIS model (including V_{REF}, R_{REF}, C_{REF}, and V_{MEAS} values) or capacitive value to represent the load.
4. Record the time to V_{MEAS}.
5. Compare the results of steps 2 and 4. The increase (or decrease) in delay should be added to (or subtracted from) the appropriate Output standard adjustment (Table 47) to yield the worst-case delay of the PCB trace.

Simultaneously Switching Output Guidelines

This section provides guidelines for the maximum allowable number of Simultaneous Switching Outputs (SSOs). These guidelines describe the maximum number of user I/O pins, of a given output signal standard, that should simultaneously switch in the same direction, while maintaining a safe level of switching noise. Meeting these guidelines for the stated test conditions ensures that the FPGA operates free from the adverse effects of ground and power bounce.

Ground or power bounce occurs when a large number of outputs simultaneously switch in the same direction. The output drive transistors all conduct current to a common voltage rail. Low-to-High transitions conduct to the V_{CCO} rail; High-to-Low transitions conduct to the GND rail. The resulting cumulative current transient induces a voltage difference across the inductance that exists between the die pad and the power supply or ground return. The inductance is associated with bonding wires, the package lead frame, and any other signal routing inside the package. Other variables contribute to SSO noise levels, including stray inductance on the PCB as well as capacitive loading at receivers. Any SSO-induced voltage consequently affects internal switching noise margins and ultimately signal quality.

Table 49 and Table 50 provide the essential SSO guidelines. For each device/package combination, Table 49 provides the number of equivalent V_{CCO}/GND pairs. The equivalent number of pairs is based on characterization and will possibly not match the physical number of pairs. For each output signal standard and drive strength, Table 50 recommends the maximum number of SSOs, switching in the same direction, allowed per V_{CCO}/GND pair within an I/O bank. The Table 50 guidelines are categorized by package style. Multiply the appropriate numbers from Table 49 and Table 50 to calculate the maximum number of SSOs allowed within an I/O bank. Exceeding these SSO guidelines may result in increased power or ground bounce, degraded signal integrity, or increased system jitter.

SSO_{MAX}/IO Bank = Table 49 x Table 50

The recommended maximum SSO values assume that the FPGA is soldered on the printed circuit board and that the board uses sound design practices. The SSO values do not apply for FPGAs mounted in sockets, due to the lead inductance introduced by the socket.

The number of SSOs allowed for quad-flat packages (VQ, TQ, PQ) is lower than for ball grid array packages (FG) due to the larger lead inductance of the quad-flat packages. Ball grid array packages are recommended for applications with a large number of simultaneously switching outputs.

Table 49: **Equivalent V_{CCO}/GND Pairs per Bank**

Device	VQ100	CP132 (1)(2)	TQ144 (1)	PQ208	FT256	FG320	FG456	FG676	FG900	FG1156 (2)
XC3S50	1	1.5	1.5	2	–	–	–	–	–	–
XC3S200	1	–	1.5	2	3	–	–	–	–	–
XC3S400	–	–	1.5	2	3	3	5	–	–	–
XC3S1000	–	–	–	–	3	3	5	5	–	–
XC3S1500	–	–	–	–	–	3	5	6	–	–
XC3S2000	–	–	–	–	–	–	5	6	9	–
XC3S4000	–	–	–	–	–	–	–	6	10	12
XC3S5000	–	–	–	–	–	–	–	6	10	12

Notes:

1. The V_{CCO} lines for the pair of banks on each side of the CP132 and TQ144 packages are internally tied together. Each pair of interconnected banks shares three V_{CCO}/GND pairs. Consequently, the per bank number is 1.5.
2. The CP132, CPG132, FG1156, and FGG1156 packages are discontinued. See http://www.xilinx.com/support/documentation/spartan-3_customer_notices.htm.
3. The information in this table also applies to Pb-free packages.

Table 50: **Recommended Number of Simultaneously Switching Outputs per V_{CCO}/GND Pair**

Signal Standard (IOSTANDARD)			Package				
			VQ100	TQ144	PQ208	CP132	FT256, FG320, FG456, FG676, FG900, FG1156
Single-Ended Standards							
GTL			0	0	0	1	14
GTL_DCI			0	0	0	1	14
GTLP			0	0	0	1	19
GTLP_DCI			0	0	0	1	19
HSLVDCI_15			6	6	6	6	14
HSLVDCI_18			7	7	7	7	10
HSLVDCI_25			7	7	7	7	11
HSLVDCI_33			10	10	10	10	10
HSTL_I			11	11	11	11	17
HSTL_I_DCI			11	11	11	11	17
HSTL_III			7	7	7	7	7
HSTL_III_DCI			7	7	7	7	7
HSTL_I_18			13	13	13	13	17
HSTL_I_DCI_18			13	13	13	13	17
HSTL_II_18			9	9	9	9	9
HSTL_II_DCI_18			9	9	9	9	9
HSTL_III_18			8	8	8	8	8
HSTL_III_DCI_18			8	8	8	8	8
LVCMOS12	Slow	2	17	17	17	17	55
		4	13	13	13	13	32
		6	10	10	10	10	18
	Fast	2	12	12	12	12	31
		4	11	11	11	11	13
		6	9	9	9	9	9
LVCMOS15	Slow	2	16	12	12	19	55
		4	8	7	7	9	31
		6	7	7	7	9	18
		8	6	6	6	6	15
		12	5	5	5	5	10
	Fast	2	10	10	10	13	25
		4	6	7	7	7	16
		6	7	7	7	7	13
		8	6	6	6	6	11
		12	6	6	6	6	7

Table 50: **Recommended Number of Simultaneously Switching Outputs per V_{CCO}/GND Pair *(Cont'd)***

Signal Standard (IOSTANDARD)			Package				
			VQ100	TQ144	PQ208	CP132	FT256, FG320, FG456, FG676, FG900, FG1156
LVDCI_15			6	6	6	6	14
LVDCI_DV2_15			6	6	6	6	14
HSLVDCI_15			6	6	6	6	14
LVCMOS18	Slow	2	19	13	13	29	64
		4	13	8	8	19	34
		6	8	8	8	9	22
		8	7	7	7	9	18
		12	5	5	5	5	13
		16	5	5	5	5	10
	Fast	2	13	13	13	19	36
		4	8	8	8	13	21
		6	8	8	8	8	13
		8	7	7	7	7	10
		12	5	5	5	5	9
		16	5	5	5	5	6
LVDCI_18			7	7	7	7	10
LVDCI_DV2_18			7	7	7	7	10
HSLVDCI_18			7	7	7	7	10
LVCMOS25	Slow	2	28	16	12	42	76
		4	13	10	10	19	46
		6	13	8	8	19	33
		8	7	7	7	9	24
		12	6	6	6	9	18
		16	6	6	6	6	11
		24	5	5	5	5	7
	Fast	2	17	12	12	26	42
		4	10	10	10	13	20
		6	8	8	8	13	15
		8	7	7	7	7	13
		12	6	6	6	6	11
		16	6	6	6	6	8
		24	5	5	5	5	5
LVDCI_25			7	7	7	7	11
LVDCI_DV2_25			7	7	7	7	11
HSLVDCI_25			7	7	7	7	11

Table 50: **Recommended Number of Simultaneously Switching Outputs per V_{CCO}/GND Pair *(Cont'd)***

Signal Standard (IOSTANDARD)			Package				
			VQ100	TQ144	PQ208	CP132	FT256, FG320, FG456, FG676, FG900, FG1156
LVCMOS33	Slow	2	34	24	24	52	76
		4	17	14	14	26	46
		6	17	11	11	26	27
		8	10	10	10	13	20
		12	9	9	9	13	13
		16	8	8	8	8	10
		24	8	8	8	8	9
	Fast	2	20	20	20	26	44
		4	15	15	15	15	26
		6	11	11	11	13	16
		8	10	10	10	10	12
		12	8	8	8	8	10
		16	8	8	8	8	8
		24	7	7	7	7	7
LVDCI_33			10	10	10	10	10
LVDCI_DV2_33			10	10	10	10	10
HSLVDCI_33			10	10	10	10	10
LVTTL	Slow	2	34	25	25	52	60
		4	17	16	16	26	41
		6	17	15	15	26	29
		8	12	12	12	13	22
		12	10	10	10	13	13
		16	10	10	10	10	11
		24	8	8	8	8	9
	Fast	2	20	20	20	26	34
		4	13	13	13	13	20
		6	11	11	11	13	15
		8	10	10	10	10	12
		12	9	9	9	9	10
		16	8	8	8	8	9
		24	7	7	7	7	7

Table 50: **Recommended Number of Simultaneously Switching Outputs per V_{CCO}/GND Pair *(Cont'd)***

Signal Standard (IOSTANDARD)	Package				
	VQ100	TQ144	PQ208	CP132	FT256, FG320, FG456, FG676, FG900, FG1156
PCI33_3	9	9	9	9	9
SSTL18_I	13	13	13	13	17
SSTL18_I_DCI	13	13	13	13	17
SSTL18_II	8	8	8	8	9
SSTL2_I	10	10	10	10	13
SSTL2_I_DCI	10	10	10	10	13
SSTL2_II	6	6	6	6	9
SSTL2_II_DCI	6	6	6	6	9
Differential Standards (Number of I/O Pairs or Channels)					
LDT_25 (ULVDS_25)	5	5	5	5	5
LVDS_25	7	5	5	12	20
BLVDS_25	2	1	1		4
LVDSEXT_25	5	5	5	5	5
LVPECL_25	2	1	1		4
RSDS_25	7	5	5	12	20
DIFF_HSTL_II_18	4	4	4	4	4
DIFF_HSTL_II_18_DCI	4	4	4	4	4
DIFF_SSTL2_II	3	3	3	3	4
DIFF_SSTL2_II_DCI	3	3	3	3	4

Notes:

1. The numbers in this table are recommendations that assume the FPGA is soldered on a printed circuit board using sound practices. This table assumes the following parasitic factors: combined PCB trace and land inductance per V_{CCO} and GND pin of 1.0 nH, receiver capacitive load of 15 pF. Test limits are the V_{IL}/V_{IH} voltage limits for the respective I/O standard.
2. Regarding the SSO numbers for all DCI standards, the R_{REF} resistors connected to the VRN and VRP pins of the FPGA are 50W..
3. If more than one signal standard is assigned to the I/Os of a given bank, refer to XAPP689: *Managing Ground Bounce in Large FPGAs* for information on how to perform weighted average SSO calculations.
4. Results are based on actual silicon testing using an FPGA soldered on a typical printed-circuit board.

Internal Logic Timing

Table 51: **CLB Timing**

Symbol	Description	Speed Grade				Units
		-5		-4		
		Min	Max	Min	Max	
Clock-to-Output Times						
T_{CKO}	When reading from the FFX (FFY) Flip-Flop, the time from the active transition at the CLK input to data appearing at the XQ (YQ) output	–	0.63	–	0.72	ns
Setup Times						
T_{AS}	Time from the setup of data at the F or G input to the active transition at the CLK input of the CLB	0.46	–	0.53	–	ns
T_{DICK}	Time from the setup of data at the BX or BY input to the active transition at the CLK input of the CLB	1.27	–	1.57	–	ns
Hold Times						
T_{AH}	Time from the active transition at the CLK input to the point where data is last held at the F or G input	0	–	0	–	ns
T_{CKDI}	Time from the active transition at the CLK input to the point where data is last held at the BX or BY input	0.25	–	0.29	–	ns
Clock Timing						
T_{CH}	CLB CLK signal High pulse width	0.69	∞	0.79	∞	ns
T_{CL}	CLB CLK signal Low pulse width	0.69	∞	0.79	∞	ns
F_{TOG}	Maximum toggle frequency (for export control)	–	725	–	630	MHz
Propagation Times						
T_{ILO}	The time it takes for data to travel from the CLB's F (G) input to the X (Y) output	–	0.53	–	0.61	ns
Set/Reset Pulse Width						
T_{RPW_CLB}	The minimum allowable pulse width, High or Low, to the CLB's SR input	0.76	–	0.87	–	ns

Notes:

1. The numbers in this table are based on the operating conditions set forth in Table 32.
2. The timing shown is for SLICEM.
3. For minimums, use the values reported by the Xilinx timing analyzer.

Table 52: **CLB Distributed RAM Switching Characteristics**

Symbol	Description	-5		-4		Units
		Min	Max	Min	Max	
Clock-to-Output Times						
T_{SHCKO}	Time from the active edge at the CLK input to data appearing on the distributed RAM output	–	1.87	–	2.15	ns
Setup Times						
T_{DS}	Setup time of data at the BX or BY input before the active transition at the CLK input of the distributed RAM	0.46	–	0.52	–	ns
T_{AS}	Setup time of the F/G address inputs before the active transition at the CLK input of the distributed RAM	0.46	–	0.53	–	ns
T_{WS}	Setup time of the write enable input before the active transition at the CLK input of the distributed RAM	0.33	–	0.37	–	ns
Hold Times						
T_{DH}, T_{AH}, T_{WH}	Hold time of the BX, BY data inputs, the F/G address inputs, or the write enable input after the active transition at the CLK input of the distributed RAM	0	–	0	–	ns
Clock Pulse Width						
T_{WPH}, T_{WPL}	Minimum High or Low pulse width at CLK input	0.85	–	0.97	–	ns

Table 53: **CLB Shift Register Switching Characteristics**

Symbol	Description	-5		-4		Units
		Min	Max	Min	Max	
Clock-to-Output Times						
T_{REG}	Time from the active edge at the CLK input to data appearing on the shift register output	–	3.30	–	3.79	ns
Setup Times						
T_{SRLDS}	Setup time of data at the BX or BY input before the active transition at the CLK input of the shift register	0.46	–	0.52	–	ns
Hold Times						
T_{SRLDH}	Hold time of the BX or BY data input after the active transition at the CLK input of the shift register	0	–	0	–	ns
Clock Pulse Width						
T_{WPH}, T_{WPL}	Minimum High or Low pulse width at CLK input	0.85	–	0.97	–	ns

Table 54: **Synchronous 18 x 18 Multiplier Timing**

Symbol	Description	P Outputs	Speed Grade				Units
			-5		-4		
			Min	Max	Min	Max	
Clock-to-Output Times							
T_{MULTCK}	When reading from the Multiplier, the time from the active transition at the C clock input to data appearing at the P outputs	P[0]	–	1.00	–	1.15	ns
		P[15]	–	1.15	–	1.32	ns
		P[17]	–	1.30	–	1.50	ns
		P[19]	–	1.45	–	1.67	ns
		P[23]	–	1.76	–	2.02	ns
		P[31]	–	2.37	–	2.72	ns
		P[35]	–	2.67	–	3.07	ns
Setup Times							
$T_{MULIDCK}$	Time from the setup of data at the A and B inputs to the active transition at the C input of the Multiplier	-	1.84	–	2.11	–	ns
Hold Times							
$T_{MULCKID}$	Time from the active transition at the Multiplier's C input to the point where data is last held at the A and B inputs	-	0	–	0	–	ns

Notes:

1. The numbers in this table are based on the operating conditions set forth in Table 32.

Table 55: **Asynchronous 18 x 18 Multiplier Timing**

Symbol	Description	P Outputs	Speed Grade		Units
			-5	-4	
			Max	Max	
Propagation Times					
T_{MULT}	The time it takes for data to travel from the A and B inputs to the P outputs	P[0]	1.55	1.78	ns
		P[15]	3.15	3.62	ns
		P[17]	3.36	3.86	ns
		P[19]	3.49	4.01	ns
		P[23]	3.73	4.29	ns
		P[31]	4.23	4.86	ns
		P[35]	4.47	5.14	ns

Notes:

1. The numbers in this table are based on the operating conditions set forth in Table 32.

Table 56: **Block RAM Timing**

Symbol	Description	Speed Grade				Units
		-5		-4		
		Min	Max	Min	Max	
Clock-to-Output Times						
T_{BCKO}	When reading from the Block RAM, the time from the active transition at the CLK input to data appearing at the DOUT output	–	2.09	–	2.40	ns
Setup Times						
T_{BDCK}	Time from the setup of data at the DIN inputs to the active transition at the CLK input of the Block RAM	0.43	–	0.49	–	ns
Hold Times						
T_{BCKD}	Time from the active transition at the Block RAM's CLK input to the point where data is last held at the DIN inputs	0	–	0	–	ns
Clock Timing						
T_{BPWH}	Block RAM CLK signal High pulse width	1.19	∞	1.37	∞	ns
T_{BPWL}	Block RAM CLK signal Low pulse width	1.19	∞	1.37	∞	ns

Notes:

1. The numbers in this table are based on the operating conditions set forth in Table 32.
2. For minimums, use the values reported by the Xilinx timing analyzer.

Clock Distribution Switching Characteristics

Table 57: **Clock Distribution Switching Characteristics**

Description	Symbol	Maximum Speed Grade		Units
		-5	-4	
Global clock buffer (BUFG, BUFGMUX, BUFGCE) I-input to O-output delay	T_{GIO}	0.36	0.41	ns
Global clock multiplexer (BUFGMUX) select S-input setup to I0- and I1-inputs. Same as BUFGCE enable CE-input	T_{GSI}	0.53	0.60	ns

Notes:

1. For minimums, use the values reported by the Xilinx timing analyzer.

Digital Clock Manager (DCM) Timing

For specification purposes, the DCM consists of three key components: the Delay-Locked Loop (DLL), the Digital Frequency Synthesizer (DFS), and the Phase Shifter (PS).

Aspects of DLL operation play a role in all DCM applications. All such applications inevitably use the CLKIN and the CLKFB inputs connected to either the CLK0 or the CLK2X feedback, respectively. Thus, specifications in the DLL tables (Table 58 and Table 59) apply to any application that only employs the DLL component. When the DFS and/or the PS components are used together with the DLL, then the specifications listed in the DFS and PS tables (Table 60 through Table 63) supersede any corresponding ones in the DLL tables. DLL specifications that do not change with the addition of DFS or PS functions are presented in Table 58 and Table 59.

Period jitter and cycle-cycle jitter are two (of many) different ways of characterizing clock jitter. Both specifications describe statistical variation from a mean value.

Period jitter is the worst-case deviation from the average clock period of all clock cycles in the collection of clock periods sampled (usually from 100,000 to more than a million samples for specification purposes). In a histogram of period jitter, the mean value is the clock period.

Cycle-cycle jitter is the worst-case difference in clock period between adjacent clock cycles in the collection of clock periods sampled. In a histogram of cycle-cycle jitter, the mean value is zero.

Delay-Locked Loop (DLL)

Table 58: **Recommended Operating Conditions for the DLL**

Symbol		Description	Frequency Mode/ F_{CLKIN} Range	Speed Grade				Units
				-5		-4		
				Min	Max	Min	Max	
Input Frequency Ranges								
F_{CLKIN}	CLKIN_FREQ_DLL_LF	Frequency for the CLKIN input	Low	18(2)	167(3)	18(2)	167(3)	MHz
	CLKIN_FREQ_DLL_HF		High	48	280(3)	48	280(3)(4)	MHz
Input Pulse Requirements								
CLKIN_PULSE		CLKIN pulse width as a percentage of the CLKIN period	$F_{CLKIN} \leq 100$ MHz	40%	60%	40%	60%	-
			$F_{CLKIN} > 100$ MHz	45%	55%	45%	55%	-
Input Clock Jitter Tolerance and Delay Path Variation(5)								
CLKIN_CYC_JITT_DLL_LF		Cycle-to-cycle jitter at the CLKIN input	Low	–	±300	–	±300	ps
CLKIN_CYC_JITT_DLL_HF			High	–	±150	–	±150	ps
CLKIN_PER_JITT_DLL_LF		Period jitter at the CLKIN input	All	–	±1	–	±1	ns
CLKIN_PER_JITT_DLL_HF				–		–		
CLKFB_DELAY_VAR_EXT		Allowable variation of off-chip feedback delay from the DCM output to the CLKFB input	All	–	±1	–	±1	ns

Notes:

1. DLL specifications apply when any of the DLL outputs (CLK0, CLK90, CLK180, CLK270, CLK2X, CLK2X180, or CLKDV) are in use.
2. The DFS, when operating independently of the DLL, supports lower F_{CLKIN} frequencies. See Table 60.
3. The CLKIN_DIVIDE_BY_2 attribute can be used to increase the effective input frequency range up to F_{BUFG}. When set to TRUE, CLKIN_DIVIDE_BY_2 divides the incoming clock frequency by two as it enters the DCM.
4. Industrial temperature range devices have additional requirements for continuous clocking, as specified in Table 64.
5. CLKIN input jitter beyond these limits may cause the DCM to lose lock. See UG331 for more details.

Table 59: **Switching Characteristics for the DLL**

Symbol	Description	Frequency Mode / FCLKIN Range	Device	Speed Grade				Units
				-5		-4		
				Min	Max	Min	Max	
Output Frequency Ranges								
CLKOUT_FREQ_1X_LF	Frequency for the CLK0, CLK90, CLK180, and CLK270 outputs	Low	All	18	167	18	167	MHz
CLKOUT_FREQ_1X_HF	Frequency for the CLK0 and CLK180 outputs	High		48	280	48	280	MHz
CLKOUT_FREQ_2X_LF[3]	Frequency for the CLK2X and CLK2X180 outputs	Low		36	334	36	334	MHz
CLKOUT_FREQ_DV_LF	Frequency for the CLKDV output	Low		1.125	110	1.125	110	MHz
CLKOUT_FREQ_DV_HF		High		3	185	3	185	MHz
Output Clock Jitter[4]								
CLKOUT_PER_JITT_0	Period jitter at the CLK0 output	All	All	–	±100	–	±100	ps
CLKOUT_PER_JITT_90	Period jitter at the CLK90 output			–	±150	–	±150	ps
CLKOUT_PER_JITT_180	Period jitter at the CLK180 output			–	±150	–	±150	ps
CLKOUT_PER_JITT_270	Period jitter at the CLK270 output			–	±150	–	±150	ps
CLKOUT_PER_JITT_2X	Period jitter at the CLK2X and CLK2X180 outputs			–	±200	–	±200	ps
CLKOUT_PER_JITT_DV1	Period jitter at the CLKDV output when performing integer division			–	±150	–	±150	ps
CLKOUT_PER_JITT_DV2	Period jitter at the CLKDV output when performing non-integer division			–	±300	–	±300	ps
Duty Cycle								
CLKOUT_DUTY_CYCLE_DLL[5]	Duty cycle variation for the CLK0, CLK90, CLK180, CLK270, CLK2X, CLK2X180, and CLKDV outputs	All	XC3S50	–	±150	–	±150	ps
			XC3S200	–	±150	–	±150	ps
			XC3S400	–	±250	–	±250	ps
			XC3S1000	–	±400	–	±400	ps
			XC3S1500	–	±400	–	±400	ps
			XC3S2000	–	±400	–	±400	ps
			XC3S4000	–	±400	–	±400	ps
			XC3S5000	–	±400	–	±400	ps
Phase Alignment								
CLKIN_CLKFB_PHASE	Phase offset between the CLKIN and CLKFB inputs	All	All	–	±150	–	±150	ps
CLKOUT_PHASE	Phase offset between any two DLL outputs (except CLK2X and CLK0)			–	±140	–	±140	ps
	Phase offset between the CLK2X and CLK0 outputs			–	±250	–	±250	ps

Table 59: **Switching Characteristics for the DLL *(Cont'd)***

Symbol	Description	Frequency Mode / FCLKIN Range	Device	Speed Grade -5 Min	Speed Grade -5 Max	Speed Grade -4 Min	Speed Grade -4 Max	Units
Lock Time								
LOCK_DLL	When using the DLL alone: The time from deassertion at the DCM's Reset input to the rising transition at its LOCKED output. When the DCM is locked, the CLKIN and CLKFB signals are in phase	18 MHz ≤ F_{CLKIN} ≤ 30 MHz	All	–	2.88	–	2.88	ms
		30 MHz < F_{CLKIN} ≤ 40 MHz		–	2.16	–	2.16	ms
		40 MHz < F_{CLKIN} ≤ 50 MHz		–	1.20	–	1.20	ms
		50 MHz < F_{CLKIN} ≤ 60 MHz		–	0.60	–	0.60	ms
		F_{CLKIN} > 60 MHz		–	0.48	–	0.48	ms
Delay Lines								
DCM_TAP	Delay tap resolution	All	All	30.0	60.0	30.0	60.0	ps

Notes:

1. The numbers in this table are based on the operating conditions set forth in Table 32 and Table 58.
2. DLL specifications apply when any of the DLL outputs (CLK0, CLK90, CLK180, CLK270, CLK2X, CLK2X180, or CLKDV) are in use.
3. Only mask revision 'E' and later devices (see Mask and Fab Revisions, page 58) and all revisions of the XC3S50 and the XC3S1000 support DLL feedback using the CLK2X output. For all other Spartan-3 devices, use feedback from the CLK0 output (instead of the CLK2X output) and set the CLK_FEEDBACK attribute to 1X.
4. Indicates the maximum amount of output jitter that the DCM adds to the jitter on the CLKIN input.
5. This specification only applies if the attribute DUTY_CYCLE_CORRECTION = TRUE.

Digital Frequency Synthesizer (DFS)

Table 60: **Recommended Operating Conditions for the DFS**

Symbol		Description	Frequency Mode	Speed Grade -5 Min	Speed Grade -5 Max	Speed Grade -4 Min	Speed Grade -4 Max	Units
Input Frequency Ranges(2)								
F_{CLKIN}	CLKIN_FREQ_FX	Frequency for the CLKIN input	All	1	280	1	280	MHz
Input Clock Jitter Tolerance(3)								
CLKIN_CYC_JITT_FX_LF		Cycle-to-cycle jitter at the CLKIN input	Low	–	±300	–	±300	ps
CLKIN_CYC_JITT_FX_HF			High	–	±150	–	±150	ps
CLKIN_PER_JITT_FX		Period jitter at the CLKIN input	All	–	±1	–	±1	ns

Notes:

1. DFS specifications apply when either of the DFS outputs (CLKFX or CLKFX180) are used.
2. If both DFS and DLL outputs are used on the same DCM, follow the more restrictive CLKIN_FREQ_DLL specifications in Table 58.
3. CLKIN input jitter beyond these limits may cause the DCM to lose lock.

Table 61: **Switching Characteristics for the DFS**

Symbol	Description	Frequency Mode	Device	Speed Grade				Units
				-5		-4		
				Min	Max	Min	Max	
Output Frequency Ranges								
CLKOUT_FREQ_FX_LF	Frequency for the CLKFX and CLKFX180 outputs	Low	All	18	210	18	210	MHz
CLKOUT_FREQ_FX_HF		High	All	210	326[(2)]	210	307[(2)]	MHz
Output Clock Jitter								
CLKOUT_PER_JITT_FX	Period jitter at the CLKFX and CLKFX180 outputs	All	All	Note 3	Note 3	Note 3	Note 3	ps
Duty Cycle[(4)]								
CLKOUT_DUTY_CYCLE_FX	Duty cycle precision for the CLKFX and CLKFX180 outputs	All	XC3S50	–	±100	–	±100	ps
			XC3S200	–	±100	–	±100	ps
			XC3S400	–	±250	–	±250	ps
			XC3S1000	–	±400	–	±400	ps
			XC3S1500	–	±400	–	±400	ps
			XC3S2000	–	±400	–	±400	ps
			XC3S4000	–	±400	–	±400	ps
			XC3S5000	–	±400	–	±400	ps
Phase Alignment								
CLKOUT_PHASE	Phase offset between the DFS output and the CLK0 output	All	All	–	±300	–	±300	ps
Lock Time								
LOCK_DLL_FX	When using the DFS in conjunction with the DLL: The time from deassertion at the DCM's Reset input to the rising transition at its LOCKED output. When the DCM is locked, the CLKIN and CLKFB signals are in phase.	All	All	–	10.0	–	10.0	ms
LOCK_FX	When using the DFS without the DLL: The time from deassertion at the DCM's Reset input to the rising transition at its LOCKED output. By asserting the LOCKED signal, the DFS indicates valid CLKFX and CLKFX180 signals.	All	All	–	10.0	–	10.0	ms

Notes:

1. The numbers in this table are based on the operating conditions set forth in Table 32 and Table 60.
2. Mask revisions prior to the E mask revision have a CLKOUT_FREQ_FX_HF max of 280 MHz. See Mask and Fab Revisions, page 58.
3. Use the DCM Clocking Wizard in the ISE software for a Spartan-3 device specific number. Jitter number assumes 150 ps of input clock jitter.
4. The CLKFX and CLKFX180 outputs always approximate 50% duty cycles.
5. DFS specifications apply when either of the DFS outputs (CLKFX or CLKFX180) is in use.

Phase Shifter (PS)

Phase shifter operation is only supported if the DLL is in low-frequency mode, see Table 58. Fixed phase shift requires ISE software version 10.1.03 (or later).

Table 62: **Recommended Operating Conditions for the PS in Variable Phase Mode**

Symbol	Description	Frequency Mode/ F_{CLKIN} Range		Speed Grade				Units
				-5		-4		
				Min	Max	Min	Max	
Operating Frequency Ranges								
PSCLK_FREQ (F_{PSCLK})	Frequency for the PSCLK input	Low		1	167	1	167	MHz
Input Pulse Requirements								
PSCLK_PULSE	PSCLK pulse width as a percentage of the PSCLK period	Low	$F_{CLKIN} \leq 100$ MHz	40%	60%	40%	60%	-
			$F_{CLKIN} > 100$ MHz	45%	55%	45%	55%	-

Table 63: **Switching Characteristics for the PS in Variable or Fixed Phase Shift Mode**

Symbol	Description	Frequency Mode/ F_{CLKIN} Range	Speed Grade				Units
			-5		-4		
			Min	Max	Min	Max	
Phase Shifting Range							
FINE_SHIFT_RANGE	Phase shift range	Low	–	10.0	–	10.0	ns
Lock Time							
LOCK_DLL_PS	When using the PS in conjunction with the DLL: The time from deassertion at the DCM's Reset input to the rising transition at its LOCKED output. When the DCM is locked, the CLKIN and CLKFB signals are in phase.	18 MHz $\leq F_{CLKIN} \leq$ 30 MHz	–	3.28	–	3.28	ms
		30 MHz $< F_{CLKIN} \leq$ 40 MHz	–	2.56	–	2.56	ms
		40 MHz $< F_{CLKIN} \leq$ 50 MHz	–	1.60	–	1.60	ms
		50 MHz $< F_{CLKIN} \leq$ 60 MHz	–	1.00	–	1.00	ms
		60 MHz $< F_{CLKIN} \leq$ 165 MHz	–	0.88	–	0.88	ms
LOCK_DLL_PS_FX	When using the PS in conjunction with the DLL and DFS: The time from deassertion at the DCM's Reset input to the rising transition at its LOCKED output. When the DCM is locked, the CLKIN and CLKFB signals are in phase.	Low	–	10.40	–	10.40	ms

Notes:

1. The numbers in this table are based on the operating conditions set forth in Table 32 and Table 62.
2. The PS specifications in this table apply when the PS attribute CLKOUT_PHASE_SHIFT= VARIABLE or FIXED.

Miscellaneous DCM Timing

Table 64: **Miscellaneous DCM Timing**

Symbol	Description	DLL Frequency Mode	Temperature Range		Units
			Commercial	Industrial	
DCM_INPUT_CLOCK_STOP	Maximum duration that the CLKIN and CLKFB signals can be stopped(1,2)	Any	100	100	ms
DCM_RST_PW_MIN	Minimum duration of a RST pulse width	Any	3	3	CLKIN cycles
DCM_RST_PW_MAX(3)	Maximum duration of a RST pulse width(1,2)	Low	N/A	N/A	seconds
		High	N/A	10	seconds
DCM_CONFIG_LAG_TIME(4)	Maximum duration from V_{CCINT} applied to FPGA configuration successfully completed (DONE pin goes High) and clocks applied to DCM DLL(1,2)	Low	N/A	N/A	minutes
		High	N/A	10	minutes

Notes:

1. These limits only apply to applications that use the DCM DLL outputs (CLK0, CLK90, CLK180, CLK270, CLK2X, CLK2X180, and CLKDV). The DCM DFS outputs (CLKFX, CLKFX180) are unaffected. Required due to effects of device cooling: see “Momentarily Stopping CLKIN” in Chapter 3 of UG331.
2. Industrial-temperature applications that use the DLL in High-Frequency mode must use a continuous or increasing operating frequency. The DLL under these conditions does not support reducing the operating frequency once establishing an initial operating frequency.
3. This specification is equivalent to the Virtex-4 FPGA DCM_RESET specification.
4. This specification is equivalent to the Virtex-4 FPGA TCONFIG specification.

Configuration and JTAG Timing

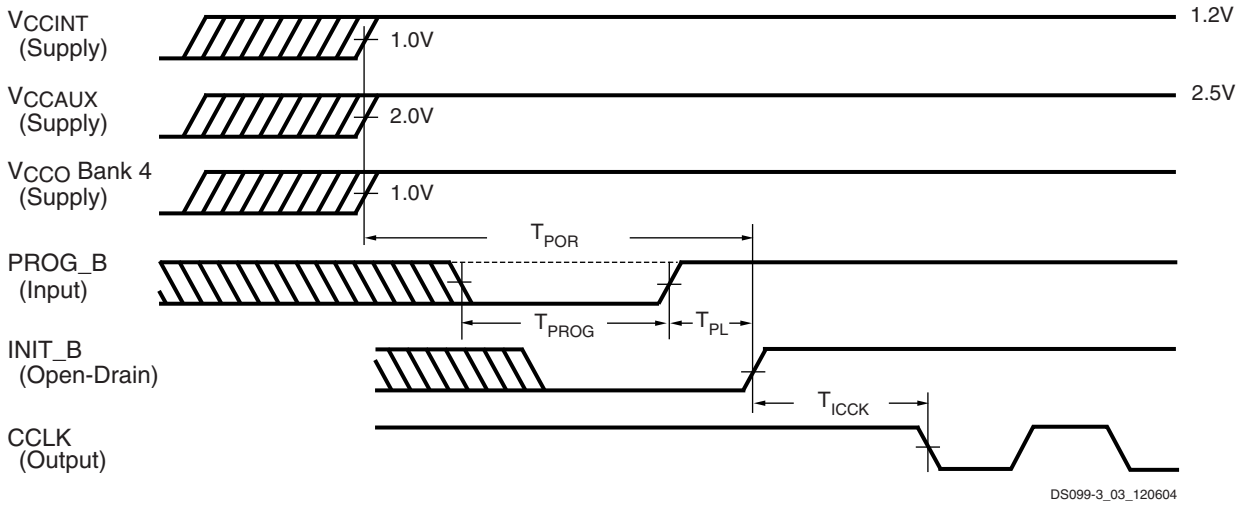

Notes:

1. The V_{CCINT}, V_{CCAUX}, and V_{CCO} supplies may be applied in any order.
2. The Low-going pulse on PROG_B is optional after power-on but necessary for reconfiguration without a power cycle.
3. The rising edge of INIT_B samples the voltage levels applied to the mode pins (M0 - M2).

Figure 36: **Waveforms for Power-On and the Beginning of Configuration**

Table 65: **Power-On Timing and the Beginning of Configuration**

Symbol	Description	Device	All Speed Grades		Units
			Min	Max	
T_{POR}[(2)]	The time from the application of V_{CCINT}, V_{CCAUX}, and V_{CCO} Bank 4 supply voltage ramps (whichever occurs last) to the rising transition of the INIT_B pin	XC3S50	–	5	ms
		XC3S200	–	5	ms
		XC3S400	–	5	ms
		XC3S1000	–	5	ms
		XC3S1500	–	7	ms
		XC3S2000	–	7	ms
		XC3S4000	–	7	ms
		XC3S5000	–	7	ms
T_{PROG}	The width of the low-going pulse on the PROG_B pin	All	0.3	–	µs
T_{PL}[(2)]	The time from the rising edge of the PROG_B pin to the rising transition on the INIT_B pin	XC3S50	–	2	ms
		XC3S200	–	2	ms
		XC3S400	–	2	ms
		XC3S1000	–	2	ms
		XC3S1500	–	3	ms
		XC3S2000	–	3	ms
		XC3S4000	–	3	ms
		XC3S5000	–	3	ms
T_{INIT}	Minimum Low pulse width on INIT_B output	All	250	–	ns
T_{ICCK}[(3)]	The time from the rising edge of the INIT_B pin to the generation of the configuration clock signal at the CCLK output pin	All	0.25	4.0	µs

Notes:

1. The numbers in this table are based on the operating conditions set forth in Table 32. This means power must be applied to all V_{CCINT}, V_{CCO}, and V_{CCAUX} lines.
2. Power-on reset and the clearing of configuration memory occurs during this period.
3. This specification applies only for the Master Serial and Master Parallel modes.

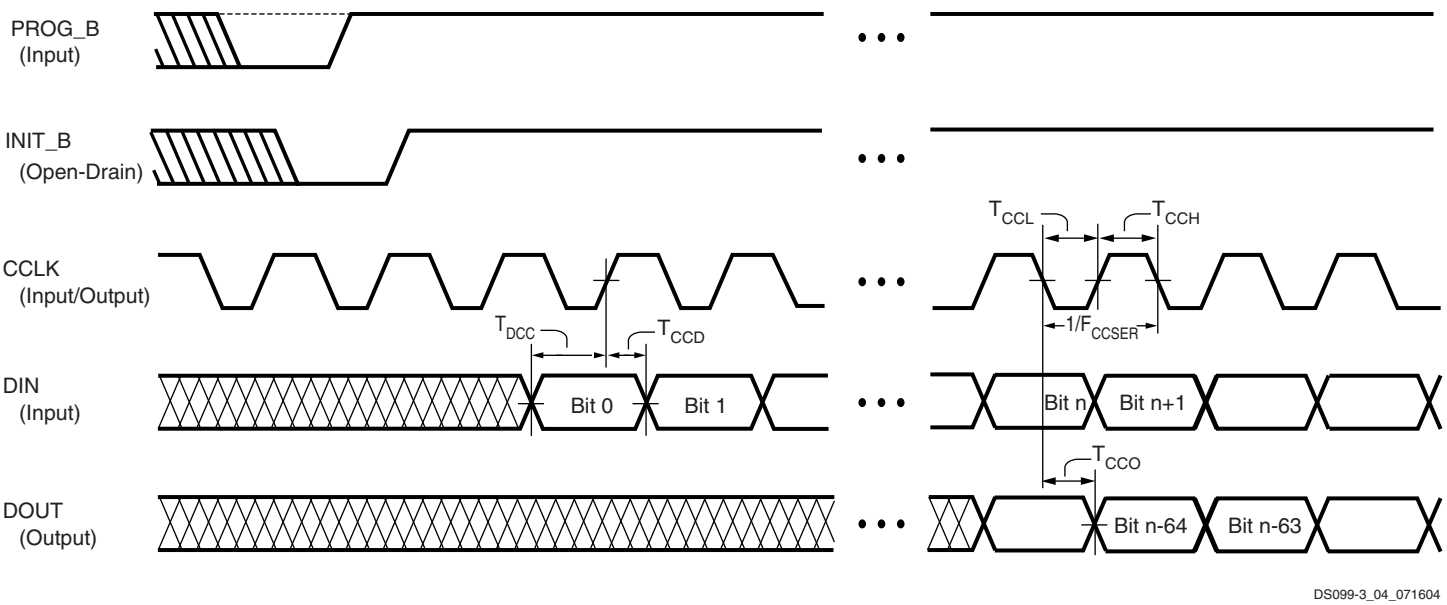

Figure 37: **Waveforms for Master and Slave Serial Configuration**

Table 66: **Timing for the Master and Slave Serial Configuration Modes**

Symbol	Description		Slave/ Master	All Speed Grades		Units
				Min	Max	
Clock-to-Output Times						
T_{CCO}	The time from the falling transition on the CCLK pin to data appearing at the DOUT pin		Both	1.5	12.0	ns
Setup Times						
T_{DCC}	The time from the setup of data at the DIN pin to the rising transition at the CCLK pin		Both	10.0	–	ns
Hold Times						
T_{CCD}	The time from the rising transition at the CCLK pin to the point when data is last held at the DIN pin		Both	0	–	ns
Clock Timing						
T_{CCH}	CCLK input pin High pulse width		Slave	5.0	∞	ns
T_{CCL}	CCLK input pin Low pulse width			5.0	∞	ns
F_{CCSER}	Frequency of the clock signal at the CCLK input pin	No bitstream compression		0	66(2)	MHz
		With bitstream compression		0	20	MHz
		During STARTUP phase		0	50	MHz
ΔF_{CCSER}	Variation from the CCLK output frequency set using the ConfigRate BitGen option		Master	–50%	+50%	–

Notes:

1. The numbers in this table are based on the operating conditions set forth in Table 32.
2. For serial configuration with a daisy-chain of multiple FPGAs, the maximum limit is 25 MHz.

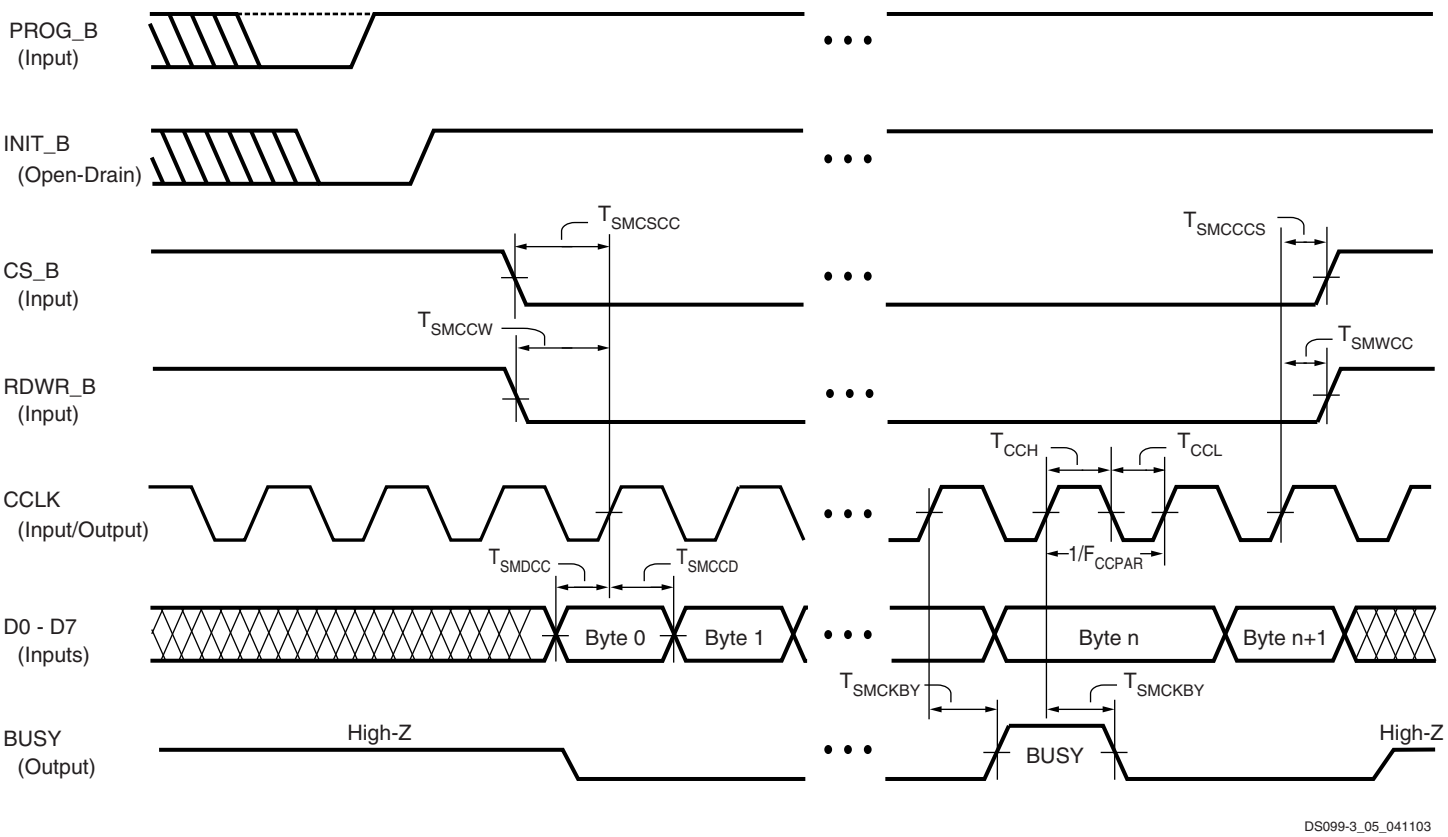

Figure 38: **Waveforms for Master and Slave Parallel Configuration**

Table 67: **Timing for the Master and Slave Parallel Configuration Modes**

Symbol	Description	Slave/ Master	All Speed Grades		Units
			Min	Max	
Clock-to-Output Times					
T_{SMCKBY}	The time from the rising transition on the CCLK pin to a signal transition at the BUSY pin	Slave	–	12.0	ns
Setup Times					
T_{SMDCC}	The time from the setup of data at the D0-D7 pins to the rising transition at the CCLK pin	Both	10.0	–	ns
T_{SMCSCC}	The time from the setup of a logic level at the CS_B pin to the rising transition at the CCLK pin		10.0	–	ns
T_{SMCCW}(3)	The time from the setup of a logic level at the RDWR_B pin to the rising transition at the CCLK pin		10.0	–	ns
Hold Times					
T_{SMCCD}	The time from the rising transition at the CCLK pin to the point when data is last held at the D0-D7 pins	Both	0	–	ns
T_{SMCCCS}	The time from the rising transition at the CCLK pin to the point when a logic level is last held at the CS_B pin		0	–	ns
T_{SMWCC}(3)	The time from the rising transition at the CCLK pin to the point when a logic level is last held at the RDWR_B pin		0	–	ns

Table 67: **Timing for the Master and Slave Parallel Configuration Modes *(Cont'd)***

Symbol	Description			Slave/ Master	All Speed Grades		Units
					Min	Max	
Clock Timing							
T_{CCH}	CCLK input pin High pulse width			Slave	5	∞	ns
T_{CCL}	CCLK input pin Low pulse width				5	∞	ns
F_{CCPAR}	Frequency of the clock signal at the CCLK input pin	No bitstream compression	Not using the BUSY pin(4)		0	50	MHz
			Using the BUSY pin		0	66	MHz
		With bitstream compression			0	20	MHz
		During STARTUP phase			0	50	MHz
ΔF_{CCPAR}	Variation from the CCLK output frequency set using the BitGen option ConfigRate			Master	–50%	+50%	–

Notes:

1. The numbers in this table are based on the operating conditions set forth in Table 32.
2. Some Xilinx documents may refer to Parallel modes as "SelectMAP" modes.
3. RDWR_B is synchronized to CCLK for the purpose of performing the Abort operation. The same pin asynchronously controls the driver impedance of the D0 - D7 pins. To avoid contention when writing configuration data to the D0 - D7 bus, do not bring RDWR_B High when CS_B is Low.
4. In the Slave Parallel mode, it is necessary to use the BUSY pin when the CCLK frequency exceeds this maximum specification.

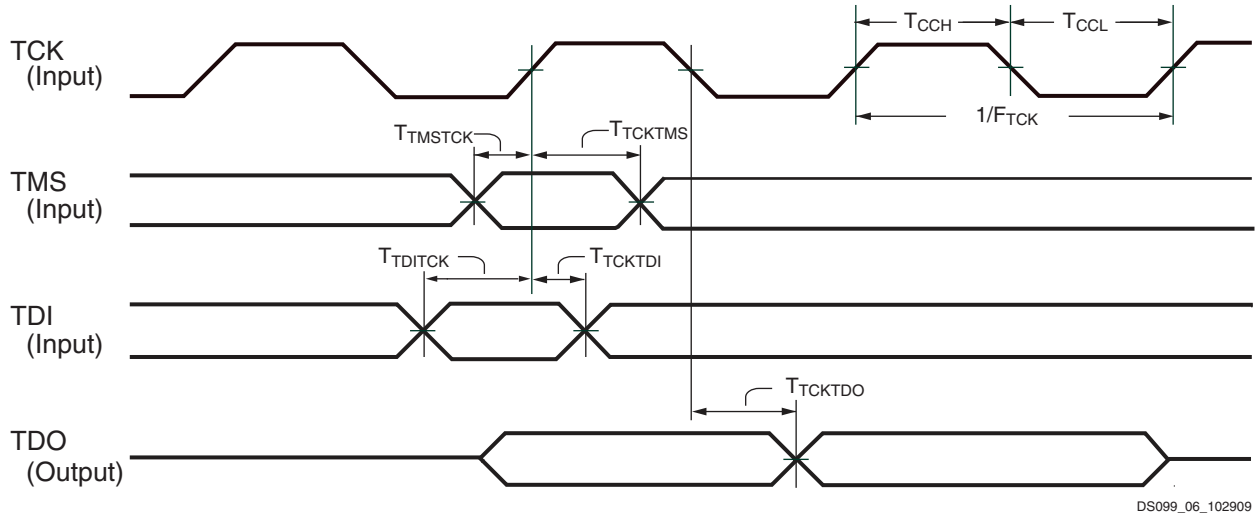

Figure 39: **JTAG Waveforms**

Table 68: **Timing for the JTAG Test Access Port**

Symbol	Description		All Speed Grades		Units
			Min	Max	
Clock-to-Output Times					
T_{TCKTDO}	The time from the falling transition on the TCK pin to data appearing at the TDO pin		1.0	11.0	ns
Setup Times					
T_{TDITCK}	The time from the setup of data at the TDI pin to the rising transition at the TCK pin		7.0	–	ns
T_{TMSTCK}	The time from the setup of a logic level at the TMS pin to the rising transition at the TCK pin		7.0	–	ns
Hold Times					
T_{TCKTDI}	The time from the rising transition at the TCK pin to the point when data is last held at the TDI pin		0	–	ns
T_{TCKTMS}	The time from the rising transition at the TCK pin to the point when a logic level is last held at the TMS pin		0	–	ns
Clock Timing					
T_{TCKH}	TCK pin High pulse width		5	∞	ns
T_{TCKL}	TCK pin Low pulse width		5	∞	ns
F_{TCK}	Frequency of the TCK signal	JTAG Configuration	0	33	MHz
		Boundary-Scan	0	25	MHz

Notes:

1. The numbers in this table are based on the operating conditions set forth in Table 32.

Revision History

Date	Version	Description
04/11/2003	1.0	Initial Xilinx release.
07/11/2003	1.1	Extended Absolute Maximum Rating for junction temperature in Table 28. Added numbers for typical quiescent supply current (Table 34) and DLL timing.
02/06/2004	1.2	Revised V_{IN} maximum rating (Table 28). Added power-on requirements (Table 30), leakage current number (Table 33), and differential output voltage levels (Table 38) for Rev. 0. Published new quiescent current numbers (Table 34). Updated pull-up and pull-down resistor strengths (Table 33). Added LVDCI_DV2 and LVPECL standards (Table 37 and Table 38). Changed CCLK setup time (Table 66 and Table 67).
03/04/2004	1.3	Added timing numbers from v1.29 speed files as well as DCM timing (Table 58 through Table 63).
08/24/2004	1.4	Added reference to errata documents on page 49. Clarified Absolute Maximum Ratings and added ESD information (Table 28). Explained V_{CCO} ramp time measurement (Table 30). Clarified I_L specification (Table 33). Updated quiescent current numbers and added information on power-on and surplus current (Table 34). Adjusted V_{REF} range for HSTL_III and HSTL_I_18 and changed V_{IH} min for LVCMOS12 (Table 35). Added note limiting V_{TT} range for SSTL2_II signal standards (Table 36). Calculated V_{OH} and V_{OL} levels for differential standards (Table 38). Updated Switching Characteristics with speed file v1.32 (Table 40 through Table 48 and Table 51 through Table 56). Corrected IOB test conditions (Table 41). Updated DCM timing with latest characterization data (Table 58 through Table 62). Improved DCM CLKIN pulse width specification (Table 58). Recommended use of Virtex-II FPGA Jitter calculator (Table 61). Improved DCM PSCLK pulse width specification (Table 62). Changed Phase Shifter lock time parameter (Table 63). Because the BitGen option Centered_x#_y# is not necessary for Variable Phase Shift mode, removed BitGen command table and referring text. Adjusted maximum CCLK frequency for the slave serial and parallel configuration modes (Table 66). Inverted CCLK waveform (Figure 37). Adjusted JTAG setup times (Table 68).
12/17/2004	1.5	Updated timing parameters to match v1.35 speed file. Improved V_{CCO} ramp time specification (Table 30). Added a note limiting the rate of change of V_{CCAUX} (Table 32). Added typical quiescent current values for the XC3S2000, XC3S4000, and XC3S5000 (Table 34). Increased I_{OH} and I_{OL} for SSTL2-I and SSTL2-II standards (Table 36). Added SSO guidelines for the VQ, TQ, and PQ packages as well as edited SSO guidelines for the FT and FG packages (Table 50). Added maximum CCLK frequencies for configuration using compressed bitstreams (Table 66 and Table 67). Added specifications for the HSLVDCI standards (Table 35, Table 36, Table 44, Table 47, Table 48, and Table 50).
08/19/2005	1.6	Updated timing parameters to match v1.37 speed file. All Spartan-3 FPGA part types, except XC3S5000, promoted to Production status. Removed V_{CCO} ramp rate restriction from all mask revision 'E' and later devices (Table 30). Added equivalent resistance values for internal pull-up and pull-down resistors (Table 33). Added worst-case quiescent current values for XC3S2000, XC3S4000, XC3S5000 (Table 34). Added industrial temperature range specification and improved typical quiescent current values (Table 34). Improved the DLL minimum clock input frequency specification from 24 MHz down to 18 MHz (Table 58). Improved the DFS minimum and maximum clock output frequency specifications (Table 60, Table 61). Added new miscellaneous DCM specifications (Table 64), primarily affecting Industrial temperature range applications. Updated Simultaneously Switching Output Guidelines and Table 50 for QFP packages. Added information on SSTL18_II I/O standard and timing to support DDR2 SDRAM interfaces. Added differential (or complementary single-ended) DIFF_HSTL_II_18 and DIFF_SSTL2_II I/O standards, including DCI terminated versions. Added electro-static discharge (ESD) data for the XC3S2000 and larger FPGAs (Table 28). Added link to Spartan-3 FPGA errata notices and how to receive automatic notifications of data sheet or errata changes.
04/03/2006	2.0	Upgraded Module 3, removing Preliminary status. Moved XC3S5000 to Production status in Table 39. Finalized I/O timing on XC3S5000 for v1.38 speed files. Added minimum timing values for various logic and I/O paths. Corrected labels for R_{PU} and R_{PD} and updated R_{PD} conditions for in Table 33. Added final mask revision 'E' specifications for LVDS_25, RSDS_25, LVDSEXT_25 differential outputs to Table 38. Added BLVDS termination requirements to Figure 34. Improved recommended Simultaneous Switching Outputs (SSOs) limits in Table 50 for quad-flat packaged based on silicon testing using devices soldered on a printed circuit board. Updated Note 2 in Table 63. Updated Note 6 in Table 30. Added INIT_B minimum pulse width specification, T_{INIT}, to Table 65.
04/26/2006	2.1	Updated document links.

Date	Version	Description
05/25/2007	2.2	Improved absolute maximum voltage specifications in Table 28, providing additional overshoot allowance. Improved XC3S50 HBM ESD to 2000V in Table 28. Based on extensive 90 nm production data, improved (reduced) the maximum quiescent current limits for the I_{CCINTQ} and I_{CCOQ} specifications in Table 34. Widened the recommended voltage range for the PCI standard and clarified the hysteresis footnote in Table 35. Noted restriction on combining differential outputs in Table 38. Updated footnote 1 in Table 64.
11/30/2007	2.3	Updated 3.3V VCCO max from 3.45V to 3.465V in Table 32 and elsewhere. Reduced t_{ICCK} minimum from 0.50µs to 0.25µs in Table 65. Updated links to technical documentation.
06/25/2008	2.4	Clarified dual marking. Added Mask and Fab Revisions. Added references to XAPP459 in Table 28 and Table 32. Removed absolute minimum and added footnote referring to timing analyzer for minimum delay values. Added HSLVDCI to Table 48 and Table 50. Updated t_{DICK} in Table 51 to match largest possible value in speed file. Updated formatting and links.
12/04/2009	2.5	Updated notes 2 and 3 in Table 28. Removed silicon process specific information and revised notes in Table 30. Updated note 3 in Table 32. Updated note 3 in Table 34. Updated note 5 in Table 35. Updated V_{OL} max and V_{OH} min for SSTL2_II in Table 36. Updated note 5 in Table 36. Updated JTAG Waveforms in Figure 39. Updated V_{ICM} max for LVPECL_25 in Table 37. Updated RT and VT for LVDS_25_DCI in Table 48. Updated Simultaneously Switching Output Guidelines. Noted that the CP132 package is being discontinued in Table 49. Removed minimum values for T_{MULTCK} clock-to-output times in Table 54. Updated footnote 3 in Table 58. Removed minimum values for T_{MULT} propagation times in Table 55. Removed silicon process specific information and revised notes in Table 61. Updated Phase Shifter (PS).
10/29/2012	3.0	Added Notice of Disclaimer. Per XCN07022, updated the discontinued FG1156 and FGG1156 package discussion throughout document. Per XCN08011, updated the discontinued CP132 and CPG132 package discussion throughout document. Revised description of V_{IN} in Table 32 and added note 7. Added note 4 to Table 33. This product is not recommended for new designs.
06/27/2013	3.1	Removed banner. This product IS recommended for new designs.

Notice of Disclaimer

THE XILINX HARDWARE FPGA AND CPLD DEVICES REFERRED TO HEREIN ("PRODUCTS") ARE SUBJECT TO THE TERMS AND CONDITIONS OF THE XILINX LIMITED WARRANTY WHICH CAN BE VIEWED AT http://www.xilinx.com/warranty.htm. THIS LIMITED WARRANTY DOES NOT EXTEND TO ANY USE OF PRODUCTS IN AN APPLICATION OR ENVIRONMENT THAT IS NOT WITHIN THE SPECIFICATIONS STATED IN THE XILINX DATA SHEET. ALL SPECIFICATIONS ARE SUBJECT TO CHANGE WITHOUT NOTICE. PRODUCTS ARE NOT DESIGNED OR INTENDED TO BE FAIL-SAFE OR FOR USE IN ANY APPLICATION REQUIRING FAIL-SAFE PERFORMANCE, SUCH AS LIFE-SUPPORT OR SAFETY DEVICES OR SYSTEMS, OR ANY OTHER APPLICATION THAT INVOKES THE POTENTIAL RISKS OF DEATH, PERSONAL INJURY, OR PROPERTY OR ENVIRONMENTAL DAMAGE ("CRITICAL APPLICATIONS"). USE OF PRODUCTS IN CRITICAL APPLICATIONS IS AT THE SOLE RISK OF CUSTOMER, SUBJECT TO APPLICABLE LAWS AND REGULATIONS.

CRITICAL APPLICATIONS DISCLAIMER

XILINX PRODUCTS (INCLUDING HARDWARE, SOFTWARE AND/OR IP CORES) ARE NOT DESIGNED OR INTENDED TO BE FAIL-SAFE, OR FOR USE IN ANY APPLICATION REQUIRING FAIL-SAFE PERFORMANCE, SUCH AS IN LIFE-SUPPORT OR SAFETY DEVICES OR SYSTEMS, CLASS III MEDICAL DEVICES, NUCLEAR FACILITIES, APPLICATIONS RELATED TO THE DEPLOYMENT OF AIRBAGS, OR ANY OTHER APPLICATIONS THAT COULD LEAD TO DEATH, PERSONAL INJURY OR SEVERE PROPERTY OR ENVIRONMENTAL DAMAGE (INDIVIDUALLY AND COLLECTIVELY, "CRITICAL APPLICATIONS"). FURTHERMORE, XILINX PRODUCTS ARE NOT DESIGNED OR INTENDED FOR USE IN ANY APPLICATIONS THAT AFFECT CONTROL OF A VEHICLE OR AIRCRAFT, UNLESS THERE IS A FAIL-SAFE OR REDUNDANCY FEATURE (WHICH DOES NOT INCLUDE USE OF SOFTWARE IN THE XILINX DEVICE TO IMPLEMENT THE REDUNDANCY) AND A WARNING SIGNAL UPON FAILURE TO THE OPERATOR. CUSTOMER AGREES, PRIOR TO USING OR DISTRIBUTING ANY SYSTEMS THAT INCORPORATE XILINX PRODUCTS, TO THOROUGHLY TEST THE SAME FOR SAFETY PURPOSES. TO THE MAXIMUM EXTENT PERMITTED BY APPLICABLE LAW, CUSTOMER ASSUMES THE SOLE RISK AND LIABILITY OF ANY USE OF XILINX PRODUCTS IN CRITICAL APPLICATIONS.

AUTOMOTIVE APPLICATIONS DISCLAIMER

XILINX PRODUCTS ARE NOT DESIGNED OR INTENDED TO BE FAIL-SAFE, OR FOR USE IN ANY APPLICATION REQUIRING FAIL-SAFE PERFORMANCE, SUCH AS APPLICATIONS RELATED TO: (I) THE DEPLOYMENT OF AIRBAGS, (II) CONTROL OF A VEHICLE, UNLESS THERE IS A FAIL-SAFE OR REDUNDANCY FEATURE (WHICH DOES NOT INCLUDE USE OF SOFTWARE IN THE XILINX DEVICE TO IMPLEMENT THE REDUNDANCY) AND A WARNING SIGNAL UPON FAILURE TO THE OPERATOR, OR (III) USES THAT COULD LEAD TO DEATH OR PERSONAL INJURY. CUSTOMER ASSUMES THE SOLE RISK AND LIABILITY OF ANY USE OF XILINX PRODUCTS IN SUCH APPLICATIONS.

Introduction

This data sheet module describes the various pins on a Spartan®-3 FPGA and how they connect to the supported component packages.

- The Pin Types section categorizes all of the FPGA pins by their function type.
- The Pin Definitions section provides a top-level description for each pin on the device.
- The Detailed, Functional Pin Descriptions section offers significantly more detail about each pin, especially for the dual- or special-function pins used during device configuration.
- Some pins have associated behavior that is controlled by settings in the configuration bitstream. These options are described in the Bitstream Options section.
- The Package Overview section describes the various packaging options available for Spartan-3 FPGAs. Detailed pin list tables and footprint diagrams are provided for each package solution.

Pin Descriptions

Pin Types

A majority of the pins on a Spartan-3 FPGA are general-purpose, user-defined I/O pins. There are, however, up to 12 different functional types of pins on Spartan-3 device packages, as outlined in Table 69. In the package footprint drawings that follow, the individual pins are color-coded according to pin type as in the table.

Table 69: **Types of Pins on Spartan-3 FPGAs**

Pin Type/ Color Code	Description	Pin Name
I/O	Unrestricted, general-purpose user-I/O pin. Most pins can be paired together to form differential I/Os.	IO, IO_Lxxy_#
DUAL	Dual-purpose pin used in some configuration modes during the configuration process and then usually available as a user I/O after configuration. If the pin is not used during configuration, this pin behaves as an I/O-type pin. There are 12 dual-purpose configuration pins on every package. The INIT_B pin has an internal pull-up resistor to VCCO_4 or VCCO_BOTTOM during configuration.	IO_Lxxy_#/DIN/D0, IO_Lxxy_#/D1, IO_Lxxy_#/D2, IO_Lxxy_#/D3, IO_Lxxy_#/D4, IO_Lxxy_#/D5, IO_Lxxy_#/D6, IO_Lxxy_#/D7, IO_Lxxy_#/CS_B, IO_Lxxy_#/RDWR_B, IO_Lxxy_#/BUSY/DOUT, IO_Lxxy_#/INIT_B
CONFIG	Dedicated configuration pin. Not available as a user-I/O pin. Every package has seven dedicated configuration pins. These pins are powered by VCCAUX and have a dedicated internal pull-up resistor to VCCAUX during configuration.	CCLK, DONE, M2, M1, M0, PROG_B, HSWAP_EN
JTAG	Dedicated JTAG pin. Not available as a user-I/O pin. Every package has four dedicated JTAG pins. These pins are powered by VCCAUX and have a dedicated internal pull-up resistor to VCCAUX during configuration.	TDI, TMS, TCK, TDO
DCI	Dual-purpose pin that is either a user-I/O pin or used to calibrate output buffer impedance for a specific bank using Digital Controlled Impedance (DCI). There are two DCI pins per I/O bank.	IO/VRN_# IO_Lxxy_#/VRN_# IO/VRP_# IO_Lxxy_#/VRP_#

© Copyright 2003–2013 Xilinx, Inc. XILINX, the Xilinx logo, Virtex, Spartan, ISE, Artix, Kintex, Zynq, Vivado, and other designated brands included herein are trademarks of Xilinx in the United States and other countries. PCI and PCI-X are trademarks of PCI-SIG and used under license. All other trademarks are the property of their respective owners.

Table 69: **Types of Pins on Spartan-3 FPGAs *(Cont'd)***

Pin Type/ Color Code	Description	Pin Name
VREF	Dual-purpose pin that is either a user-I/O pin or, along with all other VREF pins in the same bank, provides a reference voltage input for certain I/O standards. If used for a reference voltage within a bank, all VREF pins within the bank must be connected.	IO/VREF_# IO_Lxxy_#/VREF_#
GND	Dedicated ground pin. The number of GND pins depends on the package used. All must be connected.	GND
VCCAUX	Dedicated auxiliary power supply pin. The number of VCCAUX pins depends on the package used. All must be connected to +2.5V.	VCCAUX
VCCINT	Dedicated internal core logic power supply pin. The number of VCCINT pins depends on the package used. All must be connected to +1.2V.	VCCINT
VCCO	Dedicated I/O bank, output buffer power supply pin. Along with other VCCO pins in the same bank, this pin supplies power to the output buffers within the I/O bank and sets the input threshold voltage for some I/O standards.	VCCO_# **CP132 and TQ144 Packages Only:** VCCO_LEFT, VCCO_TOP, VCCO_RIGHT, VCCO_BOTTOM
GCLK	Dual-purpose pin that is either a user-I/O pin or an input to a specific global buffer input. Every package has eight dedicated GCLK pins.	IO_Lxxy_#/GCLK0, IO_Lxxy_#/GCLK1, IO_Lxxy_#/GCLK2, IO_Lxxy_#/GCLK3, IO_Lxxy_#/GCLK4, IO_Lxxy_#/GCLK5, IO_Lxxy_#/GCLK6, IO_Lxxy_#/GCLK7
N.C.	This package pin is not connected in this specific device/package combination but may be connected in larger devices in the same package.	N.C.

Notes:

1. # = I/O bank number, an integer between 0 and 7.

I/Os with Lxxy_# are part of a differential output pair. 'L' indicates differential output capability. The "xx" field is a two-digit integer, unique to each bank that identifies a differential pin-pair. The 'y' field is either 'P' for the true signal or 'N' for the inverted signal in the differential pair. The '#' field is the I/O bank number.

Pin Definitions

Table 70 provides a brief description of each pin listed in the Spartan-3 FPGA pinout tables and package footprint diagrams. Pins are categorized by their pin type, as listed in Table 69. See Detailed, Functional Pin Descriptions for more information.

Table 70: **Spartan-3 FPGA Pin Definitions**

Pin Name	Direction	Description
I/O: General-purpose I/O pins		
I/O	User-defined as input, output, bidirectional, three-state output, open-drain output, open-source output	**User I/O:** Unrestricted single-ended user-I/O pin. Supports all I/O standards except the differential standards.
I/O_Lxxy_#	User-defined as input, output, bidirectional, three-state output, open-drain output, open-source output	**User I/O, Half of Differential Pair:** Unrestricted single-ended user-I/O pin or half of a differential pair. Supports all I/O standards including the differential standards.
DUAL: Dual-purpose configuration pins		
IO_Lxxy_#/DIN/D0, IO_Lxxy_#/D1, IO_Lxxy_#/D2, IO_Lxxy_#/D3, IO_Lxxy_#/D4, IO_Lxxy_#/D5, IO_Lxxy_#/D6, IO_Lxxy_#/D7	Input during configuration Possible bidirectional I/O after configuration if SelectMap port is retained Otherwise, user I/O after configuration	**Configuration Data Port:** In Parallel (SelectMAP) modes, D0-D7 are byte-wide configuration data pins. These pins become user I/Os after configuration unless the SelectMAP port is retained via the Persist bitstream option. In Serial modes, DIN (D0) serves as the single configuration data input. This pin becomes a user I/O after configuration unless retained by the Persist bitstream option.
IO_Lxxy_#/CS_B	Input during Parallel mode configuration Possible input after configuration if SelectMap port is retained Otherwise, user I/O after configuration	**Chip Select for Parallel Mode Configuration:** In Parallel (SelectMAP) modes, this is the active-Low Chip Select signal. This pin becomes a user I/O after configuration unless the SelectMAP port is retained via the Persist bitstream option.
IO_Lxxy_#/RDWR_B	Input during Parallel mode configuration Possible input after configuration if SelectMap port is retained Otherwise, user I/O after configuration	**Read/Write Control for Parallel Mode Configuration:** In Parallel (SelectMAP) modes, this is the active-Low Write Enable, active-High Read Enable signal. This pin becomes a user I/O after configuration unless the SelectMAP port is retained via the Persist bitstream option.
IO_Lxxy_#/ BUSY/DOUT	Output during configuration Possible output after configuration if SelectMap port is retained Otherwise, user I/O after configuration	**Configuration Data Rate Control for Parallel Mode, Serial Data Output for Serial Mode:** In Parallel (SelectMAP) modes, BUSY throttles the rate at which configuration data is loaded. This pin becomes a user I/O after configuration unless the SelectMAP port is retained via the Persist bitstream option. In Serial modes, DOUT provides preamble and configuration data to downstream devices in a multi-FPGA daisy-chain. This pin becomes a user I/O after configuration.
IO_Lxxy_#/INIT_B	Bidirectional (open-drain) during configuration User I/O after configuration	**Initializing Configuration Memory/Detected Configuration Error:** When Low, this pin indicates that configuration memory is being cleared. When held Low, this pin delays the start of configuration. After this pin is released or configuration memory is cleared, the pin goes High. During configuration, a Low on this output indicates that a configuration data error occurred. This pin always has an internal pull-up resistor to VCCO_4 or VCCO_BOTTOM during configuration, regardless of the HSWAP_EN pin. This pin becomes a user I/O after configuration.
DCI: Digitally Controlled Impedance reference resistor input pins		
IO_Lxxy_#/VRN_# or IO/VRN_#	Input when using DCI Otherwise, same as I/O	**DCI Reference Resistor for NMOS I/O Transistor (per bank):** If using DCI, a 1% precision impedance-matching resistor is connected between this pin and the VCCO supply for this bank. Otherwise, this pin is a user I/O.
IO_Lxxy_#/VRP_# or IO/VRP_#	Input when using DCI Otherwise, same as I/O	**DCI Reference Resistor for PMOS I/O Transistor (per bank):** If using DCI, a 1% precision impedance-matching resistor is connected between this pin and the ground supply. Otherwise, this pin is a user I/O.

Table 70: **Spartan-3 FPGA Pin Definitions *(Cont'd)***

Pin Name	Direction	Description
GCLK: Global clock buffer inputs		
IO_Lxxy_#/GCLK0, IO_Lxxy_#/GCLK1, IO_Lxxy_#/GCLK2, IO_Lxxy_#/GCLK3, IO_Lxxy_#/GCLK4, IO_Lxxy_#/GCLK5, IO_Lxxy_#/GCLK6, IO_Lxxy_#/GCLK7	Input if connected to global clock buffers Otherwise, same as I/O	**Global Buffer Input:** Direct input to a low-skew global clock buffer. If not connected to a global clock buffer, this pin is a user I/O.
VREF: I/O bank input reference voltage pins		
IO_Lxxy_#/VREF_# or IO/VREF_#	Voltage supply input when VREF pins are used within a bank. Otherwise, same as I/O	**Input Buffer Reference Voltage for Special I/O Standards (per bank):** If required to support special I/O standards, all the VREF pins within a bank connect to a input threshold voltage source. If not used as input reference voltage pins, these pins are available as individual user-I/O pins.
CONFIG: Dedicated configuration pins (pull-up resistor to VCCAUX always active during configuration, regardless of HSWAP_EN pin)		
CCLK	Input in Slave configuration modes Output in Master configuration modes	**Configuration Clock:** The configuration clock signal synchronizes configuration data. This pin has an internal pull-up resistor to VCCAUX during configuration.
PROG_B	Input	**Program/Configure Device:** Active Low asynchronous reset to configuration logic. Asserting PROG_B Low for an extended period delays the configuration process. This pin has an internal pull-up resistor to VCCAUX during configuration.
DONE	Bidirectional with open-drain or totem-pole Output	**Configuration Done, Delay Start-up Sequence:** A Low-to-High output transition on this bidirectional pin signals the end of the configuration process. The FPGA produces a Low-to-High transition on this pin to indicate that the configuration process is complete. The DriveDone bitstream generation option defines whether this pin functions as a totem-pole output that actively drives High or as an open-drain output. An open-drain output requires a pull-up resistor to produce a High logic level. The open-drain option permits the DONE lines of multiple FPGAs to be tied together, so that the common node transitions High only after all of the FPGAs have completed configuration. Externally holding the open-drain output Low delays the start-up sequence, which marks the transition to user mode.
M0, M1, M2	Input	**Configuration Mode Selection:** These inputs select the configuration mode. The logic levels applied to the mode pins are sampled on the rising edge of INIT_B. See Table 75. These pins have an internal pull-up resistor to VCCAUX during configuration, making Slave Serial the default configuration mode.
HSWAP_EN	Input	**Disable Pull-up Resistors During Configuration:** A Low on this pin enables pull-up resistors on all pins that are not actively involved in the configuration process. A High value disables all pull-ups, allowing the non-configuration pins to float.
JTAG: JTAG interface pins (pull-up resistor to VCCAUX always active during configuration, regardless of HSWAP_EN pin)		
TCK	Input	**JTAG Test Clock:** The TCK clock signal synchronizes all JTAG port operations. This pin has an internal pull-up resistor to VCCAUX during configuration.

Table 70: **Spartan-3 FPGA Pin Definitions *(Cont'd)***

Pin Name	Direction	Description
TDI	Input	**JTAG Test Data Input:** TDI is the serial data input for all JTAG instruction and data registers. This pin has an internal pull-up resistor to VCCAUX during configuration.
TMS	Input	**JTAG Test Mode Select:** The serial TMS input controls the operation of the JTAG port. This pin has an internal pull-up resistor to VCCAUX during configuration.
TDO	Output	**JTAG Test Data Output:** TDO is the serial data output for all JTAG instruction and data registers. This pin has an internal pull-up resistor to VCCAUX during configuration.
VCCO: I/O bank output voltage supply pins		
VCCO_#	Supply	**Power Supply for Output Buffer Drivers (per bank):** These pins power the output drivers within a specific I/O bank.
VCCAUX: Auxiliary voltage supply pins		
VCCAUX	Supply	**Power Supply for Auxiliary Circuits:** +2.5V power pins for auxiliary circuits, including the Digital Clock Managers (DCMs), the dedicated configuration pins (CONFIG), and the dedicated JTAG pins. All VCCAUX pins must be connected.
VCCINT: Internal core voltage supply pins		
VCCINT	Supply	**Power Supply for Internal Core Logic:** +1.2V power pins for the internal logic. All pins must be connected.
GND: Ground supply pins		
GND	Supply	**Ground:** Ground pins, which are connected to the power supply's return path. All pins must be connected.
N.C.: Unconnected package pins		
N.C.		**Unconnected Package Pin:** These package pins are unconnected.

Notes:

1. All unused inputs and bidirectional pins must be tied either High or Low. For unused enable inputs, apply the level that disables the associated function. One common approach is to activate internal pull-up or pull-down resistors. An alternative approach is to externally connect the pin to either VCCO or GND.
2. All outputs are of the totem-pole type — i.e., they can drive High as well as Low logic levels — except for the cases where "Open Drain" is indicated. The latter can only drive a Low logic level and require a pull-up resistor to produce a High logic level.

Detailed, Functional Pin Descriptions

I/O Type: Unrestricted, General-purpose I/O Pins

After configuration, I/O-type pins are inputs, outputs, bidirectional I/O, three-state outputs, open-drain outputs, or open-source outputs, as defined in the application

Pins labeled "IO" support all SelectIO™ interface signal standards except differential standards. A given device at most only has a few of these pins.

A majority of the general-purpose I/O pins are labeled in the format "IO_Lxxy_#". These pins support all SelectIO signal standards, including the differential standards such as LVDS, ULVDS, BLVDS, RSDS, or LDT.

For additional information, see IOBs, page 10

Differential Pair Labeling

A pin supports differential standards if the pin is labeled in the format “Lxxy_#”. The pin name suffix has the following significance. Figure 40 provides a specific example showing a differential input to and a differential output from Bank 2.

- ‘L’ indicates differential capability.
- "xx" is a two-digit integer, unique for each bank, that identifies a differential pin-pair.
- ‘y’ is replaced by ‘P’ for the true signal or ‘N’ for the inverted. These two pins form one differential pin-pair.
- ‘#’ is an integer, 0 through 7, indicating the associated I/O bank.

If unused, these pins are in a high impedance state. The Bitstream generator option UnusedPin enables a pull-up or pull-down resistor on all unused I/O pins.

Behavior from Power-On through End of Configuration

During the configuration process, all pins that are not actively involved in the configuration process are in a high-impedance state. The CONFIG- and JTAG-type pins have an internal pull-up resistor to VCCAUX during configuration. For all other I/O pins, the HSWAP_EN input determines whether or not pull-up resistors are activated during configuration. HSWAP_EN = 0 enables the pull-up resistors. HSWAP_EN = 1 disables the pull-up resistors allowing the pins to float, which is the desired state for hot-swap applications.

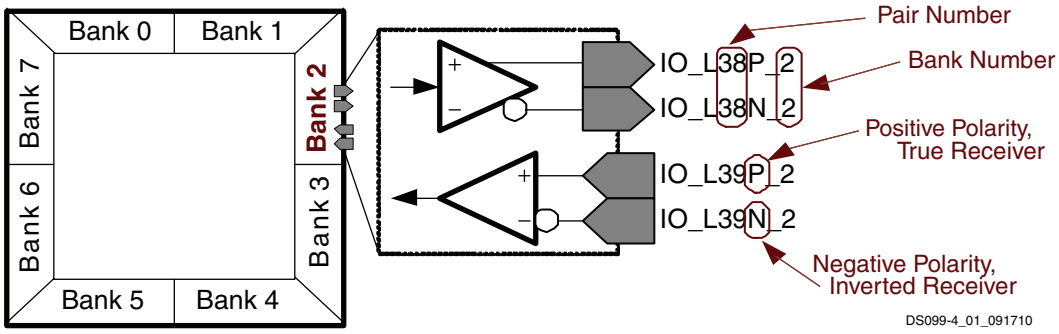

Figure 40: **Differential Pair Labelling**

DUAL Type: Dual-Purpose Configuration and I/O Pins

These pins serve dual purposes. The user-I/O pins are temporarily borrowed during the configuration process to load configuration data into the FPGA. After configuration, these pins are then usually available as a user I/O in the application. If a pin is not applicable to the specific configuration mode—controlled by the mode select pins M2, M1, and M0—then the pin behaves as an I/O-type pin.

There are 12 dual-purpose configuration pins on every package, six of which are part of I/O Bank 4, the other six part of I/O Bank 5. Only a few of the pins in Bank 4 are used in the Serial configuration modes.

See Pin Behavior During Configuration, page 122.

Serial Configuration Modes

This section describes the dual-purpose pins used during either Master or Slave Serial mode. See Table 75 for Mode Select pin settings required for Serial modes. All such pins are in Bank 4 and powered by VCCO_4.

In both the Master and Slave Serial modes, DIN is the serial configuration data input. The D1-D7 inputs are unused in serial mode and behave like general-purpose I/O pins.

In all the cases, the configuration data is synchronized to the rising edge of the CCLK clock signal.

The DIN, DOUT, and INIT_B pins can be retained in the application to support reconfiguration by setting the Persist bitstream generation option. However, the serial modes do not support device readback.

Table 71: **Dual-Purpose Pins Used in Master or Slave Serial Mode**

Pin Name	Direction	Description
DIN	Input	**Serial Data Input:** During the Master or Slave Serial configuration modes, DIN is the serial configuration data input, and all data is synchronized to the rising CCLK edge. After configuration, this pin is available as a user I/O. This signal is located in Bank 4 and its output voltage determined by VCCO_4. The BitGen option ***Persist*** permits this pin to retain its configuration function in the User mode.
DOUT	Output	**Serial Data Output:** In a multi-FPGA design where all the FPGAs use serial mode, connect the DOUT output of one FPGA—in either Master or Slave Serial mode—to the DIN input of the next FPGA—in Slave Serial mode—so that configuration data passes from one to the next, in daisy-chain fashion. This “daisy chain” permits sequential configuration of multiple FPGAs. This signal is located in Bank 4 and its output voltage determined by VCCO_4. The BitGen option ***Persist*** permits this pin to retain its configuration function in the User mode.
INIT_B	Bidirectional (open-drain)	**Initializing Configuration Memory/Configuration Error:** Just after power is applied, the FPGA produces a Low-to-High transition on this pin indicating that initialization (*i.e.*, clearing) of the configuration memory has finished. Before entering the User mode, this pin functions as an open-drain output, which requires a pull-up resistor in order to produce a High logic level. In a multi-FPGA design, tie (wire AND) the INIT_B pins from all FPGAs together so that the common node transitions High only after all of the FPGAs have been successfully initialized. Externally holding this pin Low beyond the initialization phase delays the start of configuration. This action stalls the FPGA at the configuration step just before the mode select pins are sampled. During configuration, the FPGA indicates the occurrence of a data (i.e., CRC) error by asserting INIT_B Low. This signal is located in Bank 4 and its output voltage determined by VCCO_4. The BitGen option ***Persist*** permits this pin to retain its configuration function in the User mode.

	I/O Bank 4 (VCCO_4)				*I/O Bank 5 (VCCO_5)*			
	High Nibble				*Low Nibble*			
Configuration Data Byte	**D0**	**D1**	**D2**	**D3**	**D4**	**D5**	**D6**	**D7**
0xFC =	1	1	1	1	1	1	0	0
	(MSB)							***(LSB)***

Figure 41: **Configuration Data Byte Mapping to D0-D7 Bits**

Parallel Configuration Modes (SelectMAP)

This section describes the dual-purpose configuration pins used during the Master and Slave Parallel configuration modes, sometimes also called the SelectMAP modes. In both Master and Slave Parallel configuration modes, D0-D7 form the byte-wide configuration data input. See Table 75 for Mode Select pin settings required for Parallel modes.

As shown in Figure 41, D0 is the most-significant bit while D7 is the least-significant bit. Bits D0-D3 form the high nibble of the byte and bits D4-D7 form the low nibble.

In the Parallel configuration modes, both the VCCO_4 and VCCO_5 voltage supplies are required and must both equal the voltage of the attached configuration device, typically either 2.5V or 3.3V.

Assert Low both the chip-select pin, CS_B, and the read/write control pin, RDWR_B, to write the configuration data byte presented on the D0-D7 pins to the FPGA on a rising-edge of the configuration clock, CCLK. The order of CS_B and RDWR_B does not matter, although RDWR_B must be asserted throughout the configuration process. If RDWR_B is de-asserted during configuration, the FPGA aborts the configuration operation.

After configuration, these pins are available as general-purpose user I/O. However, the SelectMAP configuration interface is optionally available for debugging and dynamic reconfiguration. To use these SelectMAP pins after configuration, set the Persist bitstream generation option.

The Readback debugging option, for example, requires the Persist bitstream generation option. During Readback mode, assert CS_B Low, along with RDWR_B High, to read a configuration data byte from the FPGA to the D0-D7 bus on a rising CCLK edge. During Readback mode, D0-D7 are output pins.

In all the cases, the configuration data and control signals are synchronized to the rising edge of the CCLK clock signal.

Table 72: **Dual-Purpose Configuration Pins for Parallel (SelectMAP) Configuration Modes**

<table>
<tr><th>Pin Name</th><th>Direction</th><th>Description</th></tr>
<tr><td>D0,
D1,
D2,
D3</td><td>• Input during configuration
• Output during readback</td><td>Configuration Data Port (high nibble):
Collectively, the D0-D7 pins are the byte-wide configuration data port for the Parallel (SelectMAP) configuration modes. Configuration data is synchronized to the rising edge of CCLK clock signal.
The D0-D3 pins are the high nibble of the configuration data byte and located in Bank 4 and powered by VCCO_4.
The BitGen option Persist permits this pin to retain its configuration function in the User mode.</td></tr>
<tr><td>D4,
D5,
D6,
D7</td><td>• Input during configuration
• Output during readback</td><td>Configuration Data Port (low nibble):
The D4-D7 pins are the low nibble of the configuration data byte. However, these signals are located in Bank 5 and powered by VCCO_5.
The BitGen option Persist permits this pin to retain its configuration function in the User mode.</td></tr>
<tr><td>CS_B</td><td>Input</td><td>Chip Select for Parallel Mode Configuration:
Assert this pin Low, together with RDWR_B to write a configuration data byte from the D0-D7 bus to the FPGA on a rising CCLK edge.
During Readback, assert this pin Low, along with RDWR_B High, to read a configuration data byte from the FPGA to the D0-D7 bus on a rising CCLK edge.
This signal is located in Bank 5 and powered by VCCO_5.
The BitGen option Persist permits this pin to retain its configuration function in the User mode.
<table>
<tr><th>CS_B</th><th>Function</th></tr>
<tr><td>0</td><td>FPGA selected. SelectMAP inputs are valid on the next rising edge of CCLK.</td></tr>
<tr><td>1</td><td>FPGA deselected. All SelectMAP inputs are ignored.</td></tr>
</table></td></tr>
<tr><td>RDWR_B</td><td>Input</td><td>Read/Write Control for Parallel Mode Configuration:
In Master and Slave Parallel modes, assert this pin Low together with CS_B to write a configuration data byte from the D0-D7 bus to the FPGA on a rising CCLK edge. Once asserted during configuration, RDWR_B must remain asserted until configuration is complete.
During Readback, assert this pin High with CS_B Low to read a configuration data byte from the FPGA to the D0-D7 bus on a rising CCLK edge.
This signal is located in Bank 5 and powered by VCCO_5.
The BitGen option Persist permits this pin to retain its configuration function in the User mode.
<table>
<tr><th>RDWR_B</th><th>Function</th></tr>
<tr><td>0</td><td>If CS_B is Low, then load (write) configuration data to the FPGA.</td></tr>
<tr><td>1</td><td>This option is valid only if the Persist bitstream option is set to Yes. If CS_B is Low, then read configuration data from the FPGA.</td></tr>
</table></td></tr>
</table>

Table 72: **Dual-Purpose Configuration Pins for Parallel (SelectMAP) Configuration Modes *(Cont'd)***

<table>
<tr><th>Pin Name</th><th>Direction</th><th>Description</th></tr>
<tr><td>BUSY</td><td>Output</td><td>Configuration Data Rate Control for Parallel Mode:
In the Slave and Master Parallel modes, BUSY throttles the rate at which configuration data is loaded. BUSY is only necessary if CCLK operates at greater than 50 MHz. Ignore BUSY for frequencies of 50 MHz and below.
When BUSY is Low, the FPGA accepts the next configuration data byte on the next rising CCLK edge for which CS_B and RDWR_B are Low. When BUSY is High, the FPGA ignores the next configuration data byte. The next configuration data value must be held or reloaded until the next rising CCLK edge when BUSY is Low. When CS_B is High, BUSY is in a high impedance state.
<table>
<tr><th>BUSY</th><th>Function</th></tr>
<tr><td>0</td><td>The FPGA is ready to accept the next configuration data byte.</td></tr>
<tr><td>1</td><td>The FPGA is busy processing the current configuration data byte and is not ready to accept the next byte.</td></tr>
<tr><td>Hi-Z</td><td>If CS_B is High, then BUSY is high impedance.</td></tr>
</table>
This signal is located in Bank 4 and its output voltage is determined by VCCO_4. The BitGen option Persist permits this pin to retain its configuration function in the User mode.</td></tr>
<tr><td>INIT_B</td><td>Bidirectional (open-drain)</td><td>Initializing Configuration Memory/Configuration Error (active-Low):
See description under Serial Configuration Modes, page 112.</td></tr>
</table>

JTAG Configuration Mode

In the JTAG configuration mode all dual-purpose configuration pins are unused and behave exactly like user-I/O pins, as shown in Table 79. See Table 75 for Mode Select pin settings required for JTAG mode.

Dual-Purpose Pin I/O Standard During Configuration

During configuration, the dual-purpose pins default to CMOS input and output levels for the associated VCCO voltage supply pins. For example, in the Parallel configuration modes, both VCCO_4 and VCCO_5 are required. If connected to +2.5V, then the associated pins conform to the LVCMOS25 I/O standard. If connected to +3.3V, then the pins drive LVCMOS output levels and accept either LVTTL or LVCMOS input levels.

Dual-Purpose Pin Behavior After Configuration

After the configuration process completes, these pins, if they were borrowed during configuration, become user-I/O pins available to the application. If a dual-purpose configuration pin is not used during the configuration process—*i.e.*, the parallel configuration pins when using serial mode—then the pin behaves exactly like a general-purpose I/O. See I/O Type: Unrestricted, General-purpose I/O Pins section.

DCI: User I/O or Digitally Controlled Impedance Resistor Reference Input

These pins are individual user-I/O pins unless one of the I/O standards used in the bank requires the Digitally Controlled Impedance (DCI) feature. If DCI is used, then 1% precision resistors connected to the VRP_# and VRN_# pins match the impedance on the input or output buffers of the I/O standards that use DCI within the bank. The '#' character in the pin name indicates the associated I/O bank and is an integer, 0 through 7.

There are two DCI pins per I/O bank, except in the CP132 and TQ144 packages, which do not have any DCI inputs for Bank 5.

VRP and VRN Impedance Resistor Reference Inputs

The 1% precision impedance-matching resistor attached to the VRP_# pin controls the pull-up impedance of PMOS transistor in the input or output buffer. Consequently, the VRP_# pin must connect to ground. The 'P' character in "VRP" indicates that this pin controls the I/O buffer's PMOS transistor impedance. The VRP_# pin is used for both single and split termination.

The 1% precision impedance-matching resistor attached to the VRN_# pin controls the pull-down impedance of NMOS transistor in the input or output buffer. Consequently, the VRN_# pin must connect to VCCO. The 'N' character in "VRN" indicates that this pin controls the I/O buffer's NMOS transistor impedance. The VRN_# pin is only used for split termination.

Each VRN or VRP reference input requires its own resistor. A single resistor cannot be shared between VRN or VRP pins associated with different banks.

During configuration, these pins behave exactly like user-I/O pins. The associated DCI behavior is not active or valid until after configuration completes.

Also see Digitally Controlled Impedance (DCI), page 16.

DCI Termination Types

If the I/O in an I/O bank do not use the DCI feature, then no external resistors are required and both the VRP_# and VRN_# pins are available for user I/O, as shown in section [a] of Figure 42.

If the I/O standards within the associated I/O bank require single termination—such as GTL_DCI, GTLP_DCI, or HSTL_III_DCI—then only the VRP_# signal connects to a 1% precision impedance-matching resistor, as shown in section [b] of Figure 42. A resistor is not required for the VRN_# pin.

Finally, if the I/O standards with the associated I/O bank require split termination—such as HSTL_I_DCI, SSTL2_I_DCI, SSTL2_II_DCI, or LVDS_25_DCI and LVDSEXT_25_DCI receivers—then both the VRP_# and VRN_# pins connect to separate 1% precision impedance-matching resistors, as shown in section [c] of Figure 42. Neither pin is available for user I/O.

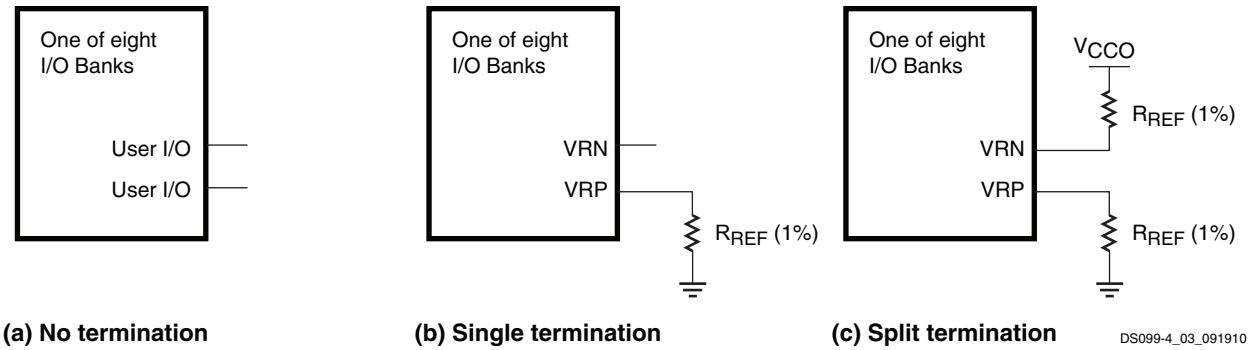

Figure 42: **DCI Termination Types**

GCLK: Global Clock Buffer Inputs or General-Purpose I/O Pins

These pins are user-I/O pins unless they specifically connect to one of the eight low-skew global clock buffers on the device, specified using the IBUFG primitive.

There are eight GCLK pins per device and two each appear in the top-edge banks, Bank 0 and 1, and the bottom-edge banks, Banks 4 and 5. See Figure 40 for a picture of bank labeling.

During configuration, these pins behave exactly like user-I/O pins.

Also see Global Clock Network, page 42.

CONFIG: Dedicated Configuration Pins

The dedicated configuration pins control the configuration process and are not available as user-I/O pins. Every package has seven dedicated configuration pins. All CONFIG-type pins are powered by the +2.5V VCCAUX supply.

Also see Configuration, page 46.

CCLK: Configuration Clock

The configuration clock signal on this pin synchronizes the reading or writing of configuration data. The CCLK pin is an input-only pin for the Slave Serial and Slave Parallel configuration modes. In the Master Serial and Master Parallel configuration modes, the FPGA drives the CCLK pin and CCLK should be treated as a full bidirectional I/O pin for signal integrity analysis.

Although the CCLK frequency is relatively low, Spartan-3 FPGA output edge rates are fast. Any potential signal integrity problems on the CCLK board trace can cause FPGA configuration to fail. Therefore, pay careful attention to the CCLK signal integrity on the printed circuit board. Signal integrity simulation with IBIS is recommended. For all configuration modes except JTAG, consider the signal integrity at every CCLK trace destination, including the FPGA's CCLK pin. For more details on CCLK design considerations, see Chapter 2 of UG332, *Spartan-3 Generation Configuration User Guide*.

During configuration, the CCLK pin has a pull-up resistor to VCCAUX, regardless of the HSWAP_EN pin. After configuration, the CCLK pin is pulled High to VCCAUX by default as defined by the ***CclkPin*** bitstream selection, although this behavior is programmable. Any clocks applied to CCLK after configuration are ignored unless the bitstream option ***Persist*** is set to ***Yes***, which retains the configuration interface. ***Persist*** is set to ***No*** by default. However, if ***Persist*** is set to ***Yes***, then all clock edges are potentially active events, depending on the other configuration control signals.

The bitstream generator option ***ConfigRate*** determines the frequency of the internally-generated CCLK oscillator required for the Master configuration modes. The actual frequency is approximate due to the characteristics of the silicon oscillator and varies by up to 50% over the temperature and voltage range. By default, CCLK operates at approximately 6 MHz. Via the ***ConfigRate*** option, the oscillator frequency is set at approximately 3, 6, 12, 25, or 50 MHz. At power-on, CCLK always starts operation at its lowest frequency. The device does not start operating at the higher frequency until the ConfigRate control bits are loaded during the configuration process.

PROG_B: Program/Configure Device

This asynchronous pin initiates the configuration or re-configuration processes. A Low-going pulse resets the configuration logic, initializing the configuration memory. This initialization process cannot finish until PROG_B returns High. Asserting PROG_B Low for an extended period delays the configuration process. At power-up, there is always a pull-up resistor to VCCAUX on this pin, regardless of the HSWAP_EN input. After configuration, the bitstream generator option ***ProgPin*** determines whether or not the pull-up resistor is present. By default, the ***ProgPin*** option retains the pull-up resistor.

After configuration, hold the PROG_B input High. Any Low-going pulse on PROG_B lasting 300 ns or longer restarts the configuration process.

Table 73: **PROG_B Operation**

PROG_B Input	Response
Power-up	Automatically initiates configuration process.
Low-going pulse	Initiate (re-)configuration process and continue to completion.
Extended Low	Initiate (re-)configuration process and stall process at step where configuration memory is cleared. Process is stalled until PROG_B returns High.
1	If the configuration process is started, continue to completion. If configuration process is complete, stay in User mode.

DONE: Configuration Done, Delay Start-Up Sequence

The FPGA produces a Low-to-High transition on this pin indicating that the configuration process is complete. The bitstream generator option ***DriveDone*** determines whether this pin functions as a totem-pole output that can drive High or as an open-drain output. If configured as an open-drain output—which is the default behavior—then a pull-up resistor is required to produce a High logic level. There is a bitstream option that provides an internal pull-up resistor, otherwise an external pull-up resistor is required.

The open-drain option permits the DONE lines of multiple FPGAs to be tied together, so that the common node transitions High only after all of the FPGAs have completed configuration. Externally holding the open-drain DONE pin Low delays the start-up sequence, which marks the transition to user mode.

Once the FPGA enters User mode after completing configuration, the DONE pin no longer drives the DONE pin Low. The bitstream generator option DonePin determines whether or not a pull-up resistor is present on the DONE pin to pull the pin to VCCAUX. If the pull-up resistor is eliminated, then the DONE pin must be pulled High using an external pull-up resistor or one of the FPGAs in the design must actively drive the DONE pin High via the DriveDone bitstream generator option.

The bitstream generator option DriveDone causes the FPGA to actively drive the DONE output High after configuration. This option should only be used in single-FPGA designs or on the last FPGA in a multi-FPGA daisy-chain.

By default, the bitstream generator software retains the pull-up resistor and does not actively drive the DONE pin as highlighted in Table 74, which shows the interaction of these bitstream options in single- and multi-FPGA designs.

Table 74: **DonePin and DriveDone Bitstream Option Interaction**

DonePin	DriveDone	Single- or Multi-FPGA Design	Comments
Pullnone	No	Single	External pull-up resistor, with value between 330Ω to 3.3kΩ, required on DONE.
Pullnone	No	Multi	External pull-up resistor, with value between 330Ω to 3.3kΩ, required on common node connecting to all DONE pins.
Pullnone	Yes	Single	OK, no external requirements.
Pullnone	Yes	Multi	DriveDone on last device in daisy-chain only. No external requirements.
Pullup	No	Single	OK, but pull-up on DONE pin has slow rise time. May require 330Ω pull-up resistor for high CCLK frequencies.
Pullup	No	Multi	External pull-up resistor, with value between 330Ω to 3.3kΩ, required on common node connecting to all DONE pins.
Pullup	Yes	Single	OK, no external requirements.
Pullup	Yes	Multi	DriveDone on last device in daisy-chain only. No external requirements.

M2, M1, M0: Configuration Mode Selection

The M2, M1, and M0 inputs select the FPGA configuration mode, as described in Table 75. The logic levels applied to the mode pins are sampled on the rising edge of INIT_B.

Table 75: **Spartan-3 FPGA Mode Select Settings**

Configuration Mode	M2	M1	M0
Master Serial	0	0	0
Slave Serial	1	1	1
Master Parallel	0	1	1
Slave Parallel	1	1	0
JTAG	1	0	1
Reserved	0	0	1
Reserved	0	1	0
Reserved	1	0	0
After Configuration	X	X	X

Notes:

1. X = don't care, either 0 or 1.

Before and during configuration, the mode pins have an internal pull-up resistor to VCCAUX, regardless of the HSWAP_EN pin. If the mode pins are unconnected, then the FPGA defaults to the Slave Serial configuration mode. After configuration successfully completes, any levels applied to these input are ignored. Furthermore, the bitstream generator options M0Pin, M1Pin, and M2Pin determines whether a pull-up resistor, pull-down resistor, or no resistor is present on its respective mode pin, M0, M1, or M2.

HSWAP_EN: Disable Pull-up Resistors During Configuration

As shown in Table 76, a Low on this asynchronous pin enables pull-up resistors on all user I/Os not actively involved in the configuration process, although only until device configuration completes. A High disables the pull-up resistors during configuration, which is the desired state for some applications.

The dedicated configuration CONFIG pins (CCLK, DONE, PROG_B, HSWAP_EN, M2, M1, M0), the JTAG pins (TDI, TMS, TCK, TDO) and the INIT_B always have active pull-up resistors during configuration, regardless of the value on HSWAP_EN.

After configuration, HSWAP_EN becomes a "don't care" input and any pull-up resistors previously enabled by HSWAP_EN are disabled. If a user I/O in the application requires a pull-up resistor after configuration, place a PULLUP primitive on the associated I/O pin or, for some pins, set the associated bitstream generator option.

Table 76: **HSWAP_EN Encoding**

HSWAP_EN	Function
During Configuration	
0	Enable pull-up resistors on all pins not actively involved in the configuration process. Pull-ups are only active until configuration completes. See Table 79.
1	No pull-up resistors during configuration.
After Configuration, User Mode	
X	This pin has no function except during device configuration.

Notes:

1. X = don't care, either 0 or 1.

The Bitstream generator option HswapenPin determines whether a pull-up resistor to VCCAUX, a pull-down resistor, or no resistor is present on HSWAP_EN after configuration.

JTAG: Dedicated JTAG Port Pins

Table 77: **JTAG Pin Descriptions**

Pin Name	Direction	Description	Bitstream Generation Option
TCK	Input	**Test Clock:** The TCK clock signal synchronizes all boundary scan operations on its rising edge.	The BitGen option **TckPin** determines whether a pull-up resistor, pull-down resistor or no resistor is present.
TDI	Input	**Test Data Input:** TDI is the serial data input for all JTAG instruction and data registers. This input is sampled on the rising edge of TCK.	The BitGen option **TdiPin** determines whether a pull-up resistor, pull-down resistor or no resistor is present.
TMS	Input	**Test Mode Select:** The TMS input controls the sequence of states through which the JTAG TAP state machine passes. This input is sampled on the rising edge of TCK.	The BitGen option **TmsPin** determines whether a pull-up resistor, pull-down resistor or no resistor is present.
TDO	Output	**Test Data Output:** The TDO pin is the data output for all JTAG instruction and data registers. This output is sampled on the rising edge of TCK. The TDO output is an active totem-pole driver and is not like the open-collector TDO output on Virtex®-II Pro FPGAs.	The BitGen option **TdoPin** determines whether a pull-up resistor, pull-down resistor or no resistor is present.

These pins are dedicated connections to the four-wire IEEE 1532/IEEE 1149.1 JTAG port, shown in Figure 43 and described in Table 77. The JTAG port is used for boundary-scan testing, device configuration, application debugging, and possibly an additional serial port for the application. These pins are dedicated and are not available as user-I/O pins. Every package has four dedicated JTAG pins and these pins are powered by the +2.5V VCCAUX supply.

For additional information on JTAG configuration, see Boundary-Scan (JTAG) Mode, page 50.

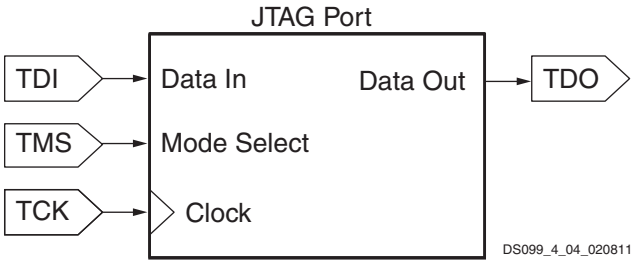

Figure 43: **JTAG Port**

IDCODE Register

Spartan-3 FPGAs contain a 32-bit identification register called the IDCODE register, as defined in the IEEE 1149.1 JTAG standard. The fixed value electrically identifies the manufacture (Xilinx) and the type of device being addressed over a JTAG chain. This register allows the JTAG host to identify the device being tested or programmed via JTAG. See Table 78.

Using JTAG Port After Configuration

The JTAG port is always active and available before, during, and after FPGA configuration. Add the BSCAN_SPARTAN3 primitive to the design to create user-defined JTAG instructions and JTAG chains to communicate with internal logic.

Furthermore, the contents of the User ID register within the JTAG port can be specified as a Bitstream Generation option. By default, the 32-bit User ID register contains `0xFFFFFFFF`.

Table 78: **Spartan-3 JTAG IDCODE Register Values (hexadecimal)**

Part Number	IDCODE Register
XC3S50	0x0140C093
XC3S200	0x01414093
XC3S400	0x0141C093
XC3S1000	0x01428093
XC3S1500	0x01434093
XC3S2000	0x01440093
XC3S4000	0x01448093
XC3S5000	0x01450093

Precautions When Using the JTAG Port in 3.3V Environments

The JTAG port is powered by the +2.5V VCCAUX power supply. When connecting to a 3.3V interface, the JTAG input pins must be current-limited using a series resistor. Similarly, the TDO pin is a CMOS output powered from +2.5V. The TDO output can directly drive a 3.3V input but with reduced noise immunity. See 3.3V-Tolerant Configuration Interface, page 47. See also XAPP453: *The 3.3V Configuration of Spartan-3 FPGAs* for additional details.

The following interface precautions are recommended when connecting the JTAG port to a 3.3V interface.

- Avoid actively driving the JTAG input signals High with 3.3V signal levels. If required in the application, use series current-limiting resistors to keep the current below 10 mA per pin.
- If possible, drive the FPGA JTAG inputs with drivers that can be placed in high-impedance (Hi-Z) after using the JTAG port. Alternatively, drive the FPGA JTAG inputs with open-drain outputs, which only drive Low. In both cases, pull-up resistors are required. The FPGA JTAG pins have pull-up resistors to VCCAUX before configuration and optional pull-up resistors after configuration, controlled by Bitstream Options, page 125.

VREF: User I/O or Input Buffer Reference Voltage for Special Interface Standards

These pins are individual user-I/O pins unless collectively they supply an input reference voltage, VREF_#, for any SSTL, HSTL, GTL, or GTLP I/Os implemented in the associated I/O bank. The '#' character in the pin name represents an integer, 0 through 7, that indicates the associated I/O bank.

The VREF function becomes active for this pin whenever a signal standard requiring a reference voltage is used in the associated bank. If used as a user I/O, then each pin behaves as an independent I/O described in the I/O type section. If used for a reference voltage within a bank, then *all* VREF pins within the bank must be connected to the same reference voltage.

Spartan-3 devices are designed and characterized to support certain I/O standards when VREF is connected to +1.25V, +1.10V, +1.00V, +0.90V, +0.80V, and +0.75V. During configuration, the VREF pins behave exactly like user-I/O pins.

If designing for footprint compatibility across the range of devices in a specific package, and if the VREF_# pins within a bank connect to an input reference voltage, then also connect any N.C. (not connected) pins on the smaller devices in that package to the input reference voltage. More details are provided later for each package type.

N.C. Type: Unconnected Package Pins

Pins marked as "N.C." are unconnected for the specific device/package combination. For other devices in this same package, this pin may be used as an I/O or VREF connection. In both the pinout tables and the footprint diagrams, unconnected pins are noted with either a black diamond symbol (◆) or a black square symbol (■).

If designing for footprint compatibility across multiple device densities, check the pin types of the other Spartan-3 devices available in the same footprint. If the N.C. pin matches to VREF pins in other devices, and the VREF pins are used in the associated I/O bank, then connect the N.C. to the VREF voltage source.

VCCO Type: Output Voltage Supply for I/O Bank

Each I/O bank has its own set of voltage supply pins that determines the output voltage for the output buffers in the I/O bank. Furthermore, for some I/O standards such as LVCMOS, LVCMOS25, LVTTL, etc., VCCO sets the input threshold voltage on the associated input buffers.

Spartan-3 devices are designed and characterized to support various I/O standards for VCCO values of +1.2V, +1.5V, +1.8V, +2.5V, and +3.3V.

Most VCCO pins are labeled as VCCO_# where the '#' symbol represents the associated I/O bank number, an integer ranging from 0 to 7. In the 144-pin TQFP package (TQ144) however, the VCCO pins along an edge of the device are combined into a single VCCO input. For example, the VCCO inputs for Bank 0 and Bank 1 along the top edge of the package are combined and relabeled VCCO_TOP. The bottom, left, and right edges are similarly combined.

In Serial configuration mode, VCCO_4 must be at a level compatible with the attached configuration memory or data source. In Parallel configuration mode, both VCCO_4 and VCCO_5 must be at the same compatible voltage level.

All VCCO inputs to a bank must be connected together and to the voltage supply. Furthermore, there must be sufficient supply decoupling to guarantee problem-free operation, as described in XAPP623: *Power Distribution System (PDS) Design: Using Bypass/Decoupling Capacitors*.

VCCINT Type: Voltage Supply for Internal Core Logic

Internal core logic circuits such as the configurable logic blocks (CLBs) and programmable interconnect operate from the VCCINT voltage supply inputs. VCCINT must be +1.2V.

All VCCINT inputs must be connected together and to the +1.2V voltage supply. Furthermore, there must be sufficient supply decoupling to guarantee problem-free operation, as described in XAPP623.

VCCAUX Type: Voltage Supply for Auxiliary Logic

The VCCAUX pins supply power to various auxiliary circuits, such as to the Digital Clock Managers (DCMs), the JTAG pins, and to the dedicated configuration pins (CONFIG type). VCCAUX must be +2.5V.

All VCCAUX inputs must be connected together and to the +2.5V voltage supply. Furthermore, there must be sufficient supply decoupling to guarantee problem-free operation, as described in XAPP623.

Because VCCAUX connects to the DCMs and the DCMs are sensitive to voltage changes, be sure that the VCCAUX supply and the ground return paths are designed for low noise and low voltage drop, especially that caused by a large number of simultaneous switching I/Os.

GND Type: Ground

All GND pins must be connected and have a low resistance path back to the various VCCO, VCCINT, and VCCAUX supplies.

Pin Behavior During Configuration

Table 79 shows how various pins behave during the FPGA configuration process. The actual behavior depends on the values applied to the M2, M1, and M0 mode select pins and the HSWAP_EN pin. The mode select pins determine which of the DUAL type pins are active during configuration. In JTAG configuration mode, none of the DUAL-type pins are used for configuration and all behave as user-I/O pins.

All DUAL-type pins not actively used during configuration and all I/O-type, DCI-type, VREF-type, GCLK-type pins are high impedance (floating, three-stated, Hi-Z) during the configuration process. These pins are indicated in Table 79 as shaded table entries or cells. These pins have a pull-up resistor to their associated VCCO if the HSWAP_EN pin is Low. When HSWAP_EN is High, these pull-up resistors are disabled during configuration.

Some pins always have an active pull-up resistor during configuration, regardless of the value applied to the HSWAP_EN pin. After configuration, these pull-up resistors are controlled by Bitstream Options.

- All the dedicated CONFIG-type configuration pins (CCLK, PROG_B, DONE, M2, M1, M0, and HSWAP_EN) have a pull-up resistor to VCCAUX.
- All JTAG-type pins (TCK, TDI, TMS, TDO) have a pull-up resistor to VCCAUX.
- The INIT_B DUAL-purpose pin has a pull-up resistor to VCCO_4 or VCCO_BOTTOM, depending on package style.

After configuration completes, some pins have optional behavior controlled by the configuration bitstream loaded into the part. For example, via the bitstream, all unused I/O pins can be collectively configured as input pins with either a pull-up resistor, a pull-down resistor, or be left in a high-impedance state.

Table 79: **Pin Behavior After Power-Up, During Configuration**

Pin Name	Configuration Mode Settings <M2:M1:M0>					Bitstream Configuration Option
	Serial Modes		SelectMap Parallel Modes		JTAG Mode <1:0:1>	
	Master <0:0:0>	Slave <1:1:1>	Master <0:1:1>	Slave <1:1:0>		
I/O: General-purpose I/O pins						
IO						UnusedPin
IO_Lxxy_#						UnusedPin
DUAL: Dual-purpose configuration pins						
IO_Lxxy_#/ DIN/D0	DIN (I)	DIN (I)	D0 (I/O)	D0 (I/O)		Persist UnusedPin
IO_Lxxy_#/ D1			D1 (I/O)	D1 (I/O)		Persist UnusedPin
IO_Lxxy_#/ D2			D2 (I/O)	D2 (I/O)		Persist UnusedPin
IO_Lxxy_#/ D3			D3 (I/O)	D3 (I/O)		Persist UnusedPin
IO_Lxxy_#/ D4			D4 (I/O)	D4 (I/O)		Persist UnusedPin

Table 79: **Pin Behavior After Power-Up, During Configuration *(Cont'd)***

Pin Name	Configuration Mode Settings <M2:M1:M0>					Bitstream Configuration Option
	Serial Modes		SelectMap Parallel Modes		JTAG Mode <1:0:1>	
	Master <0:0:0>	Slave <1:1:1>	Master <0:1:1>	Slave <1:1:0>		
IO_Lxxy_#/ D5			D5 (I/O)	D5 (I/O)		Persist UnusedPin
IO_Lxxy_#/ D6			D6 (I/O)	D6 (I/O)		Persist UnusedPin
IO_Lxxy_#/ D7			D7 (I/O)	D7 (I/O)		Persist UnusedPin
IO_Lxxy_#/ CS_B			CS_B (I)	CS_B (I)		Persist UnusedPin
IO_Lxxy_#/ RDWR_B			RDWR_B (I)	RDWR_B (I)		Persist UnusedPin
IO_Lxxy_#/ BUSY/DOUT	DOUT (O)	DOUT (O)	BUSY (O)	BUSY (O)		Persist UnusedPin
DUAL: Dual-purpose configuration pins (INIT_B has a pull-up resistor to VCCO_4 or VCCO_BOTTOM always active during configuration, regardless of HSWAP_EN pin)						
IO_Lxxy_#/ INIT_B	INIT_B (I/OD)	INIT_B (I/OD)	INIT_B (I/OD)	INIT_B (I/OD)		UnusedPin
DCI: Digitally Controlled Impedance reference resistor input pins						
IO_Lxxy_#/ VRN_#						UnusedPin
IO/VRN_#						UnusedPin
IO_Lxxy_#/ VRP_#						UnusedPin
IO/VRP_#						UnusedPin
GCLK: Global clock buffer inputs						
IO_Lxxy_#/ GCLK0 through GCLK7						UnusedPin
VREF: I/O bank input reference voltage pins						
IO_Lxxy_#/ VREF_#						UnusedPin
IO/VREF_#						UnusedPin
CONFIG: Dedicated configuration pins (pull-up resistor to VCCAUX always active during configuration, regardless of HSWAP_EN pin)						
CCLK	CCLK (I/O)	CCLK (I)	CCLK (I/O)	CCLK (I)		CclkPin ConfigRate
PROG_B	PROG_B (I) (pull-up)	PROG_B (I) (pull-up)	PROG_B (I) (pull-up)	PROG_B (I) (pull-up)	PROG_B (I), Via JPROG_B instruction	ProgPin
DONE	DONE (I/OD)	DONE (I/OD)	DONE (I/OD)	DONE (I/OD)	DONE (I/OD)	DriveDone DonePin DonePipe
M2	M2=0 (I)	M2=1 (I)	M2=0 (I)	M2=1 (I)	M2=1 (I)	M2Pin
M1	M1=0 (I)	M1=1 (I)	M1=1 (I)	M1=1 (I)	M1=0 (I)	M1Pin
M0	M0=0 (I)	M0=1 (I)	M0=1 (I)	M0=0 (I)	M0=1 (I)	M0Pin
HSWAP_EN	HSWAP_EN (I)	HSWAP_EN (I)	HSWAP_EN (I)	HSWAP_EN (I)	HSWAP_EN (I)	HswapenPin

Table 79: **Pin Behavior After Power-Up, During Configuration *(Cont'd)***

Pin Name	Configuration Mode Settings <M2:M1:M0>					Bitstream Configuration Option
	Serial Modes		SelectMap Parallel Modes		JTAG Mode <1:0:1>	
	Master <0:0:0>	Slave <1:1:1>	Master <0:1:1>	Slave <1:1:0>		
JTAG: JTAG interface pins (pull-up resistor to VCCAUX always active during configuration, regardless of HSWAP_EN pin)						
TDI	TDI (I)	TDI (I)	TDI (I)	TDI (I)	TDI (I)	TdiPin
TMS	TMS (I)	TMS (I)	TMS (I)	TMS (I)	TMS (I)	TmsPin
TCK	TCK (I)	TCK (I)	TCK (I)	TCK (I)	TCK (I)	TckPin
TDO	TDO (O)	TDO (O)	TDO (O)	TDO (O)	TDO (O)	TdoPin

Table 79: **Pin Behavior After Power-Up, During Configuration *(Cont'd)***

Pin Name	Configuration Mode Settings <M2:M1:M0>					Bitstream Configuration Option
	Serial Modes		SelectMap Parallel Modes		JTAG Mode <1:0:1>	
	Master <0:0:0>	Slave <1:1:1>	Master <0:1:1>	Slave <1:1:0>		
VCCO: I/O bank output voltage supply pins						
VCCO_4 (for DUAL pins)	Same voltage as external interface	Same voltage as external interface	Same voltage as external interface	Same voltage as external interface	VCCO_4	N/A
VCCO_5 (for DUAL pins)	VCCO_5	VCCO_5	Same voltage as external interface	Same voltage as external interface	VCCO_5	N/A
VCCO_#	VCCO_#	VCCO_#	VCCO_#	VCCO_#	VCCO_#	N/A
VCCAUX: Auxiliary voltage supply pins						
VCCAUX	+2.5V	+2.5V	+2.5V	+2.5V	+2.5V	N/A
VCCINT: Internal core voltage supply pins						
VCCINT	+1.2V	+1.2V	+1.2V	+1.2V	+1.2V	N/A
GND: Ground supply pins						
GND	GND	GND	GND	GND	GND	N/A

Notes:

1. #= I/O bank number, an integer from 0 to 7.
2. (I) = input, (O) = output, (OD) = open-drain output, (I/O) = bidirectional, (I/OD) = bidirectional with open-drain output. Open-drain output requires pull-up to create logic High level.
3. Shaded cell indicates that the pin is high-impedance during configuration. To enable a soft pull-up resistor during configuration, drive or tie HSWAP_EN Low.

Bitstream Options

Table 80 lists the various bitstream options that affect pins on a Spartan-3 FPGA. The table shows the names of the affected pins, describes the function of the bitstream option, the name of the bitstream generator option variable, and the legal values for each variable. The default option setting for each variable is indicated with bold, underlined text.

Table 80: **Bitstream Options Affecting Spartan-3 Device Pins**

Affected Pin Name(s)	Bitstream Generation Function	Option Variable Name	Values (Default)
All unused I/O pins of type I/O, DUAL, GCLK, DCI, VREF	For all I/O pins that are unused in the application after configuration, this option defines whether the I/Os are individually tied to VCCO via a pull-up resistor, tied ground via a pull-down resistor, or left floating. If left floating, the unused pins should be connected to a defined logic level, either from a source internal to the FPGA or external.	UnusedPin	• **Pulldown** • Pullup • Pullnone
IO_Lxxy_#/DIN, IO_Lxxy_#/DOUT, IO_Lxxy_#/INIT_B	Serial configuration mode: If set to Yes, then these pins retain their functionality after configuration completes, allowing for device (re-)configuration. Readback is not supported in with serial mode.	Persist	• **No** • Yes
IO_Lxxy_#/D0, IO_Lxxy_#/D1, IO_Lxxy_#/D2, IO_Lxxy_#/D3, IO_Lxxy_#/D4, IO_Lxxy_#/D5, IO_Lxxy_#/D6, IO_Lxxy_#/D7, IO_Lxxy_#/CS_B, IO_Lxxy_#/RDWR_B, IO_Lxxy_#/BUSY, IO_Lxxy_#/INIT_B	Parallel configuration mode (also called SelectMAP): If set to Yes, then these pins retain their SelectMAP functionality after configuration completes, allowing for device readback and for partial or complete (re-)configuration.	Persist	• **No** • Yes

Table 80: **Bitstream Options Affecting Spartan-3 Device Pins *(Cont'd)***

Affected Pin Name(s)	Bitstream Generation Function	Option Variable Name	Values (Default)
CCLK	After configuration, this bitstream option either pulls CCLK to VCCAUX via a pull-up resistor, or allows CCLK to float.	CclkPin	• **Pullup** • Pullnone
CCLK	For Master configuration modes, this option sets the approximate frequency, in MHz, for the internal silicon oscillator.	ConfigRate	• 3, **6**, 12, 25, 50
PROG_B	A pull-up resistor to VCCAUX exists on PROG_B during configuration. After configuration, this bitstream option either pulls PROG_B to VCCAUX via a pull-up resistor, or allows PROG_B to float.	ProgPin	• **Pullup** • Pullnone
DONE	After configuration, this bitstream option either pulls DONE to VCCAUX via a pull-up resistor, or allows DONE to float. See also DriveDone option.	DonePin	• **Pullup** • Pullnone
DONE	If set to Yes, this option allows the FPGA's DONE pin to drive High when configuration completes. By default, the DONE is an open-drain output and can only drive Low. Only single FPGAs and the last FPGA in a multi-FPGA daisy-chain should use this option.	DriveDone	• **No** • Yes
M2	After configuration, this bitstream option either pulls M2 to VCCAUX via a pull-up resistor, to ground via a pull-down resistor, or allows M2 to float.	M2Pin	• **Pullup** • Pulldown • Pullnone
M1	After configuration, this bitstream option either pulls M1 to VCCAUX via a pull-up resistor, to ground via a pull-down resistor, or allows M1 to float.	M1Pin	• **Pullup** • Pulldown • Pullnone
M0	After configuration, this bitstream option either pulls M0 to VCCAUX via a pull-up resistor, to ground via a pull-down resistor, or allows M0 to float.	M0Pin	• **Pullup** • Pulldown • Pullnone
HSWAP_EN	After configuration, this bitstream option either pulls HSWAP_EN to VCCAUX via a pull-up resistor, to ground via a pull-down resistor, or allows HSWAP_EN to float.	HswapenPin	• **Pullup** • Pulldown • Pullnone
TDI	After configuration, this bitstream option either pulls TDI to VCCAUX via a pull-up resistor, to ground via a pull-down resistor, or allows TDI to float.	TdiPin	• **Pullup** • Pulldown • Pullnone
TMS	After configuration, this bitstream option either pulls TMS to VCCAUX via a pull-up resistor, to ground via a pull-down resistor, or allows TMS to float.	TmsPin	• **Pullup** • Pulldown • Pullnone
TCK	After configuration, this bitstream option either pulls TCK to VCCAUX via a pull-up resistor, to ground via a pull-down resistor, or allows TCK to float.	TckPin	• **Pullup** • Pulldown • Pullnone
TDO	After configuration, this bitstream option either pulls TDO to VCCAUX via a pull-up resistor, to ground via a pull-down resistor, or allows TDO to float.	TdoPin	• **Pullup** • Pulldown • Pullnone

Setting Bitstream Generator Options

Refer to the "BitGen" chapter in the Xilinx ISE® software documentation.

Package Overview

Table 81 shows the 10 low-cost, space-saving production package styles for the Spartan-3 family. Each package style is available as a standard and an environmentally-friendly lead-free (Pb-free) option. The Pb-free packages include an extra 'G' in the package style name. For example, the standard "VQ100" package becomes "VQG100" when ordered as the Pb-free option. The mechanical dimensions of the standard and Pb-free packages are similar, as shown in the mechanical drawings provided in Table 83.

Not all Spartan-3 device densities are available in all packages. However, for a specific package there is a common footprint that supports the various devices available in that package. See the footprint diagrams that follow.

Table 81: **Spartan-3 Family Package Options**

Package	Leads	Type	Maximum I/O	Pitch (mm)	Footprint (mm)	Height (mm)
VQ100 / VQG100	100	Very-thin Quad Flat Pack	63	0.5	16 x 16	1.20
CP132 / CPG132(1)	132	Chip-Scale Package	89	0.5	8 x 8	1.10
TQ144 / TQG144	144	Thin Quad Flat Pack	97	0.5	22 x 22	1.60
PQ208 / PQG208	208	Quad Flat Pack	141	0.5	30.6 x 30.6	4.10
FT256 / FTG256	256	Fine-pitch, Thin Ball Grid Array	173	1.0	17 x 17	1.55
FG320 / FGG320	320	Fine-pitch Ball Grid Array	221	1.0	19 x 19	2.00
FG456 / FGG456	456	Fine-pitch Ball Grid Array	333	1.0	23 x 23	2.60
FG676 / FGG676	676	Fine-pitch Ball Grid Array	489	1.0	27 x 27	2.60
FG900 / FGG900	900	Fine-pitch Ball Grid Array	633	1.0	31 x 31	2.60
FG1156 / FGG1156(1)	1156	Fine-pitch Ball Grid Array	784	1.0	35 x 35	2.60

Notes:

1. The CP132, CPG132, FG1156, and FGG1156 packages are discontinued. See http://www.xilinx.com/support/documentation/spartan-3_customer_notices.htm.

Selecting the Right Package Option

Spartan-3 FPGAs are available in both quad-flat pack (QFP) and ball grid array (BGA) packaging options. While QFP packaging offers the lowest absolute cost, the BGA packages are superior in almost every other aspect, as summarized in Table 82. Consequently, Xilinx recommends using BGA packaging whenever possible.

Table 82: **Comparing Spartan-3 Device Packaging Options**

Characteristic	Quad Flat-Pack (QFP)	Ball Grid Array (BGA)
Maximum User I/O	141	633
Packing Density (Logic/Area)	Good	Better
Signal Integrity	Fair	Better
Simultaneous Switching Output (SSO) Support	Limited	Better
Thermal Dissipation	Fair	Better
Minimum Printed Circuit Board (PCB) Layers	4	6
Hand Assembly/Rework	Possible	Very Difficult

Mechanical Drawings

Detailed mechanical drawings for each package type are available from the Xilinx website at the specified location in Table 83.

Material Declaration Data Sheets (MDDS) are also available on the Xilinx website for each package.

Table 83: **Xilinx Package Mechanical Drawings**

Package	Web Link (URL)
VQ100 and VQG100	http://www.xilinx.com/support/documentation/package_specs/vq100.pdf
CP132 and CPG132(1)	http://www.xilinx.com/support/documentation/package_specs/cp132.pdf
TQ144 and TQG144	http://www.xilinx.com/support/documentation/package_specs/tq144.pdf
PQ208 and PQG208	http://www.xilinx.com/support/documentation/package_specs/pq208.pdf
FT256 and FTG256	http://www.xilinx.com/support/documentation/package_specs/ft256.pdf
FG320 and FGG320	http://www.xilinx.com/support/documentation/package_specs/fg320.pdf
FG456 and FGG456	http://www.xilinx.com/support/documentation/package_specs/fg456.pdf
FG676 and FGG676	http://www.xilinx.com/support/documentation/package_specs/fg676.pdf
FG900 and FGG900	http://www.xilinx.com/support/documentation/package_specs/fg900.pdf
FG1156 and FGG1156(1)	http://www.xilinx.com/support/documentation/package_specs/fg1156.pdf

Notes:

1. The CP132, CPG132, FG1156, and FGG1156 packages are discontinued. See http://www.xilinx.com/support/documentation/spartan-3_customer_notices.htm.

Power, Ground, and I/O by Package

Each package has three separate voltage supply inputs—VCCINT, VCCAUX, and VCCO—and a common ground return, GND. The numbers of pins dedicated to these functions varies by package, as shown in Table 84.

Table 84: **Power and Ground Supply Pins by Package**

Package	VCCINT	VCCAUX	VCCO	GND
VQ100	4	4	8	10
CP132(1)	4	4	12	12
TQ144	4	4	12	16
PQ208	4	8	12	28
FT256	8	8	24	32
FG320	12	8	28	40
FG456	12	8	40	52
FG676	20	16	64	76
FG900	32	24	80	120
FG1156(1)	40	32	104	184

Notes:

1. The CP132, CPG132, FG1156, and FGG1156 packages are discontinued. See http://www.xilinx.com/support/documentation/spartan-3_customer_notices.htm.

A majority of package pins are user-defined I/O pins. However, the numbers and characteristics of these I/O depends on the device type and the package in which it is available, as shown in Table 85. The table shows the maximum number of single-ended I/O pins available, assuming that all I/O-, DUAL-, DCI-, VREF-, and GCLK-type pins are used as general-purpose I/O. Likewise, the table shows the maximum number of differential pin-pairs available on the package. Finally, the table shows how the total maximum user I/Os are distributed by pin type, including the number of unconnected—i.e., N.C.—pins on the device.

Table 85: **Maximum User I/Os by Package**

Device	Package	Maximum User I/Os	Maximum Differential Pairs	All Possible I/O Pins by Type					N.C.
				I/O	DUAL	DCI	VREF	GCLK	
XC3S50	VQ100	63	29	22	12	14	7	8	0
XC3S200	VQ100	63	29	22	12	14	7	8	0
XC3S50	CP132(1)	89	44	44	12	14	11	8	0
XC3S50	TQ144	97	46	51	12	14	12	8	0
XC3S200	TQ144	97	46	51	12	14	12	8	0
XC3S400	TQ144	97	46	51	12	14	12	8	0
XC3S50	PQ208	124	56	72	12	16	16	8	17
XC3S200	PQ208	141	62	83	12	16	22	8	0
XC3S400	PQ208	141	62	83	12	16	22	8	0
XC3S200	FT256	173	76	113	12	16	24	8	0
XC3S400	FT256	173	76	113	12	16	24	8	0
XC3S1000	FT256	173	76	113	12	16	24	8	0
XC3S400	FG320	221	100	156	12	16	29	8	0
XC3S1000	FG320	221	100	156	12	16	29	8	0
XC3S1500	FG320	221	100	156	12	16	29	8	0
XC3S400	FG456	264	116	196	12	16	32	8	69
XC3S1000	FG456	333	149	261	12	16	36	8	0
XC3S1500	FG456	333	149	261	12	16	36	8	0
XC3S2000	FG456	333	149	261	12	16	36	8	0
XC3S1000	FG676	391	175	315	12	16	40	8	98
XC3S1500	FG676	487	221	403	12	16	48	8	2
XC3S2000	FG676	489	221	405	12	16	48	8	0
XC3S4000	FG676	489	221	405	12	16	48	8	0
XC3S5000	FG676	489	221	405	12	16	48	8	0
XC3S2000	FG900	565	270	481	12	16	48	8	68
XC3S4000	FG900	633	300	549	12	16	48	8	0
XC3S5000	FG900	633	300	549	12	16	48	8	0
XC3S4000	FG1156(1)	712	312	621	12	16	55	8	73
XC3S5000	FG1156(1)	784	344	692	12	16	56	8	1

Notes:

1. The CP132, CPG132, FG1156, and FGG1156 packages are discontinued. See http://www.xilinx.com/support/documentation/spartan-3_customer_notices.htm.

Electronic versions of the package pinout tables and footprints are available for download from the Xilinx website. Using a spreadsheet program, the data can be sorted and reformatted according to any specific needs. Similarly, the ASCII-text file is easily parsed by most scripting programs. Download the files from the following location:

http://www.xilinx.com/support/documentation/data_sheets/s3_pin.zip

Package Thermal Characteristics

The power dissipated by an FPGA application has implications on package selection and system design. The power consumed by a Spartan-3 FPGA is reported using either the XPower Estimator (XPE) or the XPower Analyzer integrated in the Xilinx ISE development software. Table 86 provides the thermal characteristics for the various Spartan-3 device/package offerings.

The junction-to-case thermal resistance (θ_{JC}) indicates the difference between the temperature measured on the package body (case) and the die junction temperature per watt of power consumption. The junction-to-board (θ_{JB}) value similarly reports the difference between the board and junction temperature. The junction-to-ambient (θ_{JA}) value reports the temperature difference per watt between the ambient environment and the junction temperature. The θ_{JA} value is reported at different air velocities, measured in linear feet per minute (LFM). The "Still Air (0 LFM)" column shows the θ_{JA} value in a system without a fan. The thermal resistance drops with increasing air flow.

Table 86: **Spartan-3 FPGA Package Thermal Characteristics**

Package	Device	Junction-to-Case (θ_{JC})	Junction-to-Board (θ_{JB})	Junction-to-Ambient (θ_{JA}) at Different Air Flows				Units
				Still Air (0 LFM)	250 LFM	500 LFM	750 LFM	
VQ(G)100	XC3S50	12.0	–	46.2	38.4	35.8	34.9	°C/Watt
	XC3S200	10.0	–	40.5	33.7	31.3	30.5	°C/Watt
CP(G)132[(1)]	XC3S50	14.5	32.8	53.0	46.4	44.0	42.5	°C/Watt
TQ(G)144	XC3S50	7.6	–	41.0	31.9	27.2	25.6	°C/Watt
	XC3S200	6.6	–	34.5	26.9	23.0	21.6	°C/Watt
	XC3S400	6.1	–	32.8	25.5	21.8	20.4	°C/Watt
PQ(G)208	XC3S50	10.6	–	37.4	27.6	24.4	22.6	°C/Watt
	XC3S200	8.6	–	36.2	26.7	23.6	21.9	°C/Watt
	XC3S400	7.5	–	35.4	26.1	23.1	21.4	°C/Watt
FT(G)256	XC3S200	9.9	22.9	31.7	25.6	24.5	24.2	°C/Watt
	XC3S400	7.9	19.0	28.4	22.8	21.5	21.0	°C/Watt
	XC3S1000	5.6	14.7	24.8	19.2	18.0	17.5	°C/Watt
FG(G)320	XC3S400	8.9	13.9	24.4	19.0	17.8	17.0	°C/Watt
	XC3S1000	7.8	11.8	22.3	17.0	15.8	15.0	°C/Watt
	XC3S1500	6.7	9.8	20.3	15.18	13.8	13.1	°C/Watt
FG(G)456	XC3S400	8.4	13.6	20.8	15.1	13.9	13.4	°C/Watt
	XC3S1000	6.4	10.6	19.3	13.4	12.3	11.7	°C/Watt
	XC3S1500	4.9	8.3	18.3	12.4	11.2	10.7	°C/Watt
	XC3S2000	3.7	6.5	17.7	11.7	10.5	10.0	°C/Watt
FG(G)676	XC3S1000	6.0	10.4	17.9	13.7	12.6	12.0	°C/Watt
	XC3S1500	4.9	8.8	16.8	12.4	11.3	10.7	°C/Watt
	XC3S2000	4.1	7.9	15.6	11.1	9.9	9.3	°C/Watt
	XC3S4000	3.6	7.0	15.0	10.5	9.3	8.7	°C/Watt
	XC3S5000	3.4	6.3	14.7	10.3	9.1	8.5	°C/Watt
FG(G)900	XC3S2000	3.7	7.0	14.3	10.3	9.3	8.8	°C/Watt
	XC3S4000	3.3	6.4	13.6	9.7	8.7	8.2	°C/Watt
	XC3S5000	2.9	5.9	13.1	9.2	8.1	7.6	°C/Watt

Table 86: **Spartan-3 FPGA Package Thermal Characteristics *(Cont'd)***

Package	Device	Junction-to-Case (θ_{JC})	Junction-to-Board (θ_{JB})	Junction-to-Ambient (θ_{JA}) at Different Air Flows				Units
				Still Air (0 LFM)	250 LFM	500 LFM	750 LFM	
FG(G)1156[1]	XC3S4000	1.9	–	14.7	11.4	10.1	9.0	°C/Watt
	XC3S5000	1.9	8.9	14.5	11.3	10.0	8.9	°C/Watt

Notes:

1. The CP132, CPG132, FG1156, and FGG1156 packages are discontinued. See http://www.xilinx.com/support/documentation/spartan-3_customer_notices.htm.

VQ100: 100-lead Very-Thin Quad Flat Package

The XC3S50 and the XC3S200 devices are available in the 100-lead very-thin quad flat package, VQ100. Both devices share a common footprint for this package as shown in Table 87 and Figure 44.

All the package pins appear in Table 87 and are sorted by bank number, then by pin name. Pairs of pins that form a differential I/O pair appear together in the table. The table also shows the pin number for each pin and the pin type, as defined earlier.

An electronic version of this package pinout table and footprint diagram is available for download from the Xilinx website at http://www.xilinx.com/support/documentation/data_ sheets/s3_pin.zip.

Pinout Table

Table 87: **VQ100 Package Pinout**

Bank	XC3S50 XC3S200 Pin Name	VQ100 Pin Number	Type
0	IO_L01N_0/VRP_0	P97	DCI
0	IO_L01P_0/VRN_0	P96	DCI
0	IO_L31N_0	P92	I/O
0	IO_L31P_0/VREF_0	P91	VREF
0	IO_L32N_0/GCLK7	P90	GCLK
0	IO_L32P_0/GCLK6	P89	GCLK
0	VCCO_0	P94	VCCO
1	IO	P81	I/O
1	IO_L01N_1/VRP_1	P80	DCI
1	IO_L01P_1/VRN_1	P79	DCI
1	IO_L31N_1/VREF_1	P86	VREF
1	IO_L31P_1	P85	I/O
1	IO_L32N_1/GCLK5	P88	GCLK
1	IO_L32P_1/GCLK4	P87	GCLK
1	VCCO_1	P83	VCCO
2	IO_L01N_2/VRP_2	P75	DCI
2	IO_L01P_2/VRN_2	P74	DCI
2	IO_L21N_2	P72	I/O
2	IO_L21P_2	P71	I/O
2	IO_L24N_2	P68	I/O
2	IO_L24P_2	P67	I/O

Table 87: **VQ100 Package Pinout *(Cont'd)***

Bank	XC3S50 XC3S200 Pin Name	VQ100 Pin Number	Type
2	IO_L40N_2	P65	I/O
2	IO_L40P_2/VREF_2	P64	VREF
2	VCCO_2	P70	VCCO
3	IO	P55	I/O
3	IO	P59	I/O
3	IO_L01N_3/VRP_3	P54	DCI
3	IO_L01P_3/VRN_3	P53	DCI
3	IO_L24N_3	P61	I/O
3	IO_L24P_3	P60	I/O
3	IO_L40N_3/VREF_3	P63	VREF
3	IO_L40P_3	P62	I/O
3	VCCO_3	P57	VCCO
4	IO_L01N_4/VRP_4	P50	DCI
4	IO_L01P_4/VRN_4	P49	DCI
4	IO_L27N_4/DIN/D0	P48	DUAL
4	IO_L27P_4/D1	P47	DUAL
4	IO_L30N_4/D2	P44	DUAL
4	IO_L30P_4/D3	P43	DUAL
4	IO_L31N_4/INIT_B	P42	DUAL
4	IO_L31P_4/DOUT/BUSY	P40	DUAL
4	IO_L32N_4/GCLK1	P39	GCLK
4	IO_L32P_4/GCLK0	P38	GCLK
4	VCCO_4	P46	VCCO
5	IO_L01N_5/RDWR_B	P28	DUAL
5	IO_L01P_5/CS_B	P27	DUAL
5	IO_L28N_5/D6	P32	DUAL
5	IO_L28P_5/D7	P30	DUAL
5	IO_L31N_5/D4	P35	DUAL
5	IO_L31P_5/D5	P34	DUAL
5	IO_L32N_5/GCLK3	P37	GCLK
5	IO_L32P_5/GCLK2	P36	GCLK
5	VCCO_5	P31	VCCO
6	IO	P17	I/O
6	IO	P21	I/O
6	IO_L01N_6/VRP_6	P23	DCI
6	IO_L01P_6/VRN_6	P22	DCI
6	IO_L24N_6/VREF_6	P16	VREF
6	IO_L24P_6	P15	I/O
6	IO_L40N_6	P14	I/O

Table 87: **VQ100 Package Pinout *(Cont'd)***

Bank	XC3S50 XC3S200 Pin Name	VQ100 Pin Number	Type
6	IO_L40P_6/VREF_6	P13	VREF
6	VCCO_6	P19	VCCO
7	IO_L01N_7/VRP_7	P2	DCI
7	IO_L01P_7/VRN_7	P1	DCI
7	IO_L21N_7	P5	I/O
7	IO_L21P_7	P4	I/O
7	IO_L23N_7	P9	I/O
7	IO_L23P_7	P8	I/O
7	IO_L40N_7/VREF_7	P12	VREF
7	IO_L40P_7	P11	I/O
7	VCCO_7	P6	VCCO
N/A	GND	P3	GND
N/A	GND	P10	GND
N/A	GND	P20	GND
N/A	GND	P29	GND
N/A	GND	P41	GND
N/A	GND	P56	GND
N/A	GND	P66	GND
N/A	GND	P73	GND
N/A	GND	P82	GND
N/A	GND	P95	GND
N/A	VCCAUX	P7	VCCAUX
N/A	VCCAUX	P33	VCCAUX
N/A	VCCAUX	P58	VCCAUX
N/A	VCCAUX	P84	VCCAUX
N/A	VCCINT	P18	VCCINT
N/A	VCCINT	P45	VCCINT
N/A	VCCINT	P69	VCCINT
N/A	VCCINT	P93	VCCINT
VCCAUX	CCLK	P52	CONFIG
VCCAUX	DONE	P51	CONFIG
VCCAUX	HSWAP_EN	P98	CONFIG
VCCAUX	M0	P25	CONFIG
VCCAUX	M1	P24	CONFIG
VCCAUX	M2	P26	CONFIG
VCCAUX	PROG_B	P99	CONFIG
VCCAUX	TCK	P77	JTAG
VCCAUX	TDI	P100	JTAG

Table 87: **VQ100 Package Pinout *(Cont'd)***

Bank	XC3S50 XC3S200 Pin Name	VQ100 Pin Number	Type
VCCAUX	TDO	P76	JTAG
VCCAUX	TMS	P78	JTAG

User I/Os by Bank

Table 88 indicates how the available user-I/O pins are distributed between the eight I/O banks on the VQ100 package.

Table 88: **User I/Os Per Bank in VQ100 Package**

Package Edge	I/O Bank	Maximum I/O	All Possible I/O Pins by Type				
			I/O	DUAL	DCI	VREF	GCLK
Top	0	6	1	0	2	1	2
	1	7	2	0	2	1	2
Right	2	8	5	0	2	1	0
	3	8	5	0	2	1	0
Bottom	4	10	0	6	2	0	2
	5	8	0	6	0	0	2
Left	6	8	4	0	2	2	0
	7	8	5	0	2	1	0

VQ100 Footprint

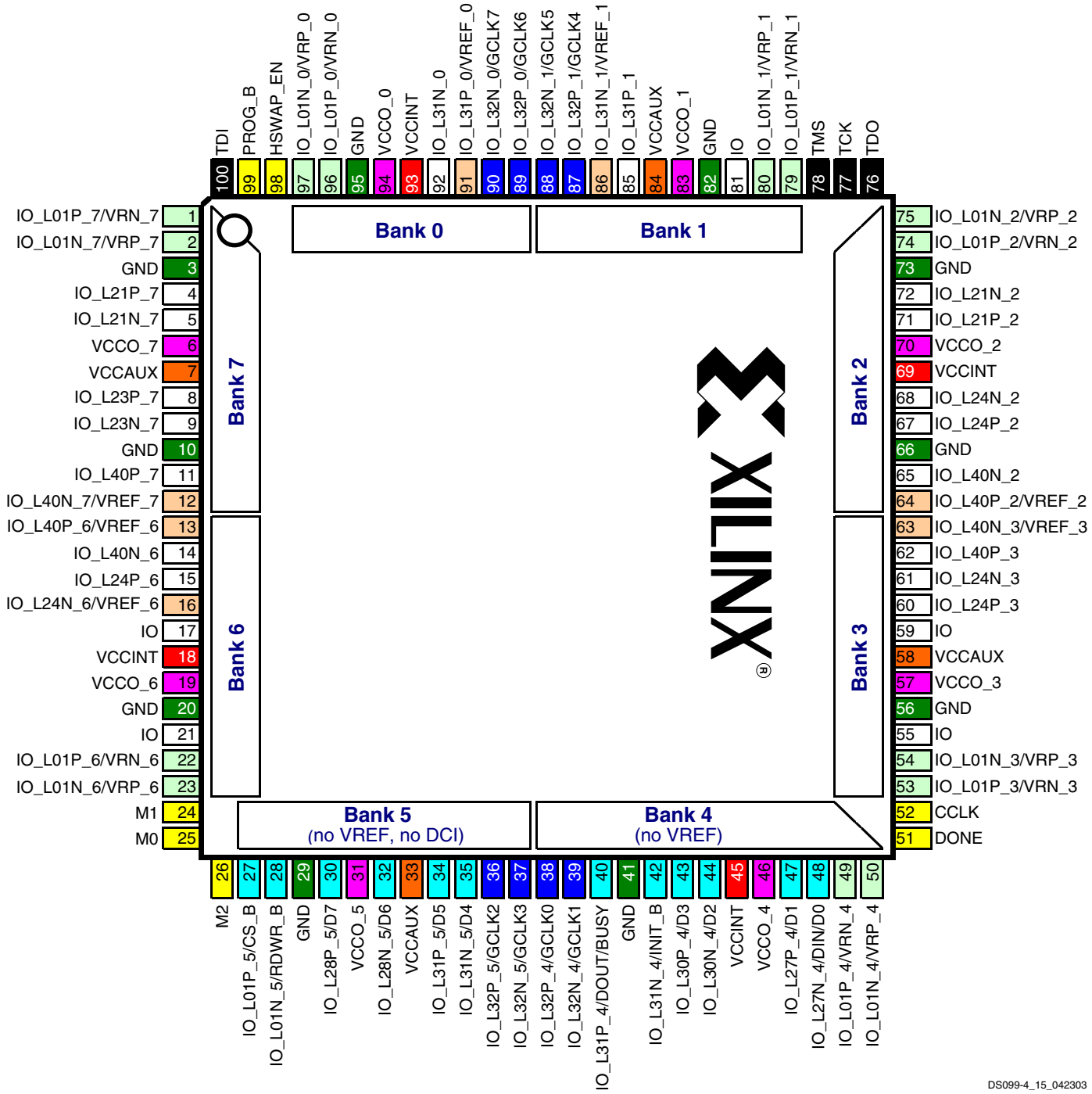

Figure 44: **VQ100 Package Footprint (Top View). Note pin 1 indicator in top-left corner and logo orientation.**

22	**I/O:** Unrestricted, general-purpose user I/O	12	**DUAL:** Configuration pin, then possible user I/O	7	**VREF:** User I/O or input voltage reference for bank
14	**DCI:** User I/O or reference resistor input for bank	8	**GCLK:** User I/O or global clock buffer input	8	**VCCO:** Output voltage supply for bank
7	**CONFIG:** Dedicated configuration pins	4	**JTAG:** Dedicated JTAG port pins	4	**VCCINT:** Internal core voltage supply (+1.2V)
0	**N.C.:** No unconnected pins in this package	10	**GND:** Ground	4	**VCCAUX:** Auxiliary voltage supply (+2.5V)

CP132: 132-Ball Chip-Scale Package

Note: The CP132 and CPG132 packages are discontinued. See www.xilinx.com/support/documentation/spartan-3.htm#19600.

The pinout and footprint for the XC3S50 in the 132-ball chip-scale package, CP132, appear in Table 89 and Figure 45.

All the package pins appear in Table 89 and are sorted by bank number, then by pin name. Pins that form a differential I/O pair appear together in the table. The table also shows the pin number for each pin and the pin type, as defined earlier.

The CP132 footprint has eight I/O banks. However, the voltage supplies for the two I/O banks along an edge are connected together internally. Consequently, there are four output voltage supplies, labeled VCCO_TOP, VCCO_RIGHT, VCCO_BOTTOM, and VCCO_LEFT.

Pinout Table

Table 89: **CP132 Package Pinout**

Bank	XC3S50 Pin Name	CP132 Ball	Type
0	IO_L01N_0/VRP_0	A3	DCI
0	IO_L01P_0/VRN_0	C4	DCI
0	IO_L27N_0	C5	I/O
0	IO_L27P_0	B5	I/O
0	IO_L30N_0	B6	I/O
0	IO_L30P_0	A6	I/O
0	IO_L31N_0	C7	I/O
0	IO_L31P_0/VREF_0	B7	VREF
0	IO_L32N_0/GCLK7	A7	GCLK
0	IO_L32P_0/GCLK6	C8	GCLK
1	IO_L01N_1/VRP_1	A13	DCI
1	IO_L01P_1/VRN_1	B13	DCI
1	IO_L27N_1	C11	I/O
1	IO_L27P_1	A12	I/O
1	IO_L28N_1	A11	I/O
1	IO_L28P_1	B11	I/O
1	IO_L31N_1/VREF_1	C9	VREF
1	IO_L31P_1	A10	I/O
1	IO_L32N_1/GCLK5	A8	GCLK
1	IO_L32P_1/GCLK4	A9	GCLK
2	IO_L01N_2/VRP_2	D12	DCI
2	IO_L01P_2/VRN_2	C14	DCI
2	IO_L20N_2	E12	I/O
2	IO_L20P_2	E13	I/O
2	IO_L21N_2	E14	I/O
2	IO_L21P_2	F12	I/O
2	IO_L23N_2/VREF_2	F13	VREF
2	IO_L23P_2	F14	I/O
2	IO_L24N_2	G12	I/O

Table 89: **CP132 Package Pinout *(Cont'd)***

Bank	XC3S50 Pin Name	CP132 Ball	Type
2	IO_L24P_2	G13	I/O
2	IO_L40N_2	G14	I/O
2	IO_L40P_2/VREF_2	H12	VREF
3	IO_L01N_3/VRP_3	N13	DCI
3	IO_L01P_3/VRN_3	N14	DCI
3	IO_L20N_3	L12	I/O
3	IO_L20P_3	M14	I/O
3	IO_L22N_3	L14	I/O
3	IO_L22P_3	L13	I/O
3	IO_L23N_3	K13	I/O
3	IO_L23P_3/VREF_3	K12	VREF
3	IO_L24N_3	J12	I/O
3	IO_L24P_3	K14	I/O
3	IO_L40N_3/VREF_3	H14	VREF
3	IO_L40P_3	J13	I/O
4	IO/VREF_4	N12	VREF
4	IO_L01N_4/VRP_4	P12	DCI
4	IO_L01P_4/VRN_4	M11	DCI
4	IO_L27N_4/DIN/D0	M10	DUAL
4	IO_L27P_4/D1	N10	DUAL
4	IO_L30N_4/D2	N9	DUAL
4	IO_L30P_4/D3	P9	DUAL
4	IO_L31N_4/INIT_B	M8	DUAL
4	IO_L31P_4/DOUT/BUSY	N8	DUAL
4	IO_L32N_4/GCLK1	P8	GCLK
4	IO_L32P_4/GCLK0	M7	GCLK
5	IO_L01N_5/RDWR_B	P2	DUAL
5	IO_L01P_5/CS_B	N2	DUAL
5	IO_L27N_5/VREF_5	M4	VREF
5	IO_L27P_5	P3	I/O
5	IO_L28N_5/D6	P4	DUAL
5	IO_L28P_5/D7	N4	DUAL
5	IO_L31N_5/D4	M6	DUAL
5	IO_L31P_5/D5	P5	DUAL
5	IO_L32N_5/GCLK3	P7	GCLK
5	IO_L32P_5/GCLK2	P6	GCLK
6	IO_L01N_6/VRP_6	L3	DCI
6	IO_L01P_6/VRN_6	M1	DCI
6	IO_L20N_6	K3	I/O
6	IO_L20P_6	K2	I/O

Table 89: **CP132 Package Pinout *(Cont'd)***

Bank	XC3S50 Pin Name	CP132 Ball	Type
6	IO_L22N_6	K1	I/O
6	IO_L22P_6	J3	I/O
6	IO_L23N_6	J2	I/O
6	IO_L23P_6	J1	I/O
6	IO_L24N_6/VREF_6	H3	VREF
6	IO_L24P_6	H2	I/O
6	IO_L40N_6	H1	I/O
6	IO_L40P_6/VREF_6	G3	VREF
7	IO_L01N_7/VRP_7	B2	DCI
7	IO_L01P_7/VRN_7	B1	DCI
7	IO_L21N_7	C1	I/O
7	IO_L21P_7	D3	I/O
7	IO_L22N_7	D1	I/O
7	IO_L22P_7	D2	I/O
7	IO_L23N_7	E2	I/O
7	IO_L23P_7	E3	I/O
7	IO_L24N_7	F3	I/O
7	IO_L24P_7	E1	I/O
7	IO_L40N_7/VREF_7	G1	VREF
7	IO_L40P_7	F2	I/O
0,1	VCCO_TOP	B12	VCCO
0,1	VCCO_TOP	A4	VCCO
0,1	VCCO_TOP	B8	VCCO
2,3	VCCO_RIGHT	D13	VCCO
2,3	VCCO_RIGHT	H13	VCCO
2,3	VCCO_RIGHT	M12	VCCO
4,5	VCCO_BOTTOM	N7	VCCO
4,5	VCCO_BOTTOM	P11	VCCO
4,5	VCCO_BOTTOM	N3	VCCO
6,7	VCCO_LEFT	G2	VCCO
6,7	VCCO_LEFT	L2	VCCO
6,7	VCCO_LEFT	C3	VCCO
N/A	GND	B4	GND
N/A	GND	B9	GND
N/A	GND	C2	GND
N/A	GND	C12	GND
N/A	GND	D14	GND
N/A	GND	F1	GND
N/A	GND	J14	GND
N/A	GND	L1	GND

Table 89: **CP132 Package Pinout *(Cont'd)***

Bank	XC3S50 Pin Name	CP132 Ball	Type
N/A	GND	M3	GND
N/A	GND	M13	GND
N/A	GND	N6	GND
N/A	GND	N11	GND
N/A	VCCAUX	A5	VCCAUX
N/A	VCCAUX	C10	VCCAUX
N/A	VCCAUX	M5	VCCAUX
N/A	VCCAUX	P10	VCCAUX
N/A	VCCINT	B10	VCCINT
N/A	VCCINT	C6	VCCINT
N/A	VCCINT	M9	VCCINT
N/A	VCCINT	N5	VCCINT
VCCAUX	CCLK	P14	CONFIG
VCCAUX	DONE	P13	CONFIG
VCCAUX	HSWAP_EN	B3	CONFIG
VCCAUX	M0	N1	CONFIG
VCCAUX	M1	M2	CONFIG
VCCAUX	M2	P1	CONFIG
VCCAUX	PROG_B	A2	CONFIG
VCCAUX	TCK	B14	JTAG
VCCAUX	TDI	A1	JTAG
VCCAUX	TDO	C13	JTAG
VCCAUX	TMS	A14	JTAG

User I/Os by Bank

Table 90 indicates how the 89 available user-I/O pins are distributed between the eight I/O banks on the CP132 package. There are only four output banks, each with its own VCCO voltage input.

Table 90: **User I/Os Per Bank for XC3S50 in CP132 Package**

Package Edge	I/O Bank	Maximum I/O	All Possible I/O Pins by Type				
			I/O	DUAL	DCI	VREF	GCLK
Top	0	10	5	0	2	1	2
	1	10	5	0	2	1	2
Right	2	12	8	0	2	2	0
	3	12	8	0	2	2	0
Bottom	4	11	0	6	2	1	2
	5	10	1	6	0	1	2
Left	6	12	8	0	2	2	0
	7	12	9	0	2	1	0

Notes:

1. The CP132 and CPG132 packages are discontinued. See www.xilinx.com/support/documentation/spartan-3.htm#19600.

CP132 Footprint

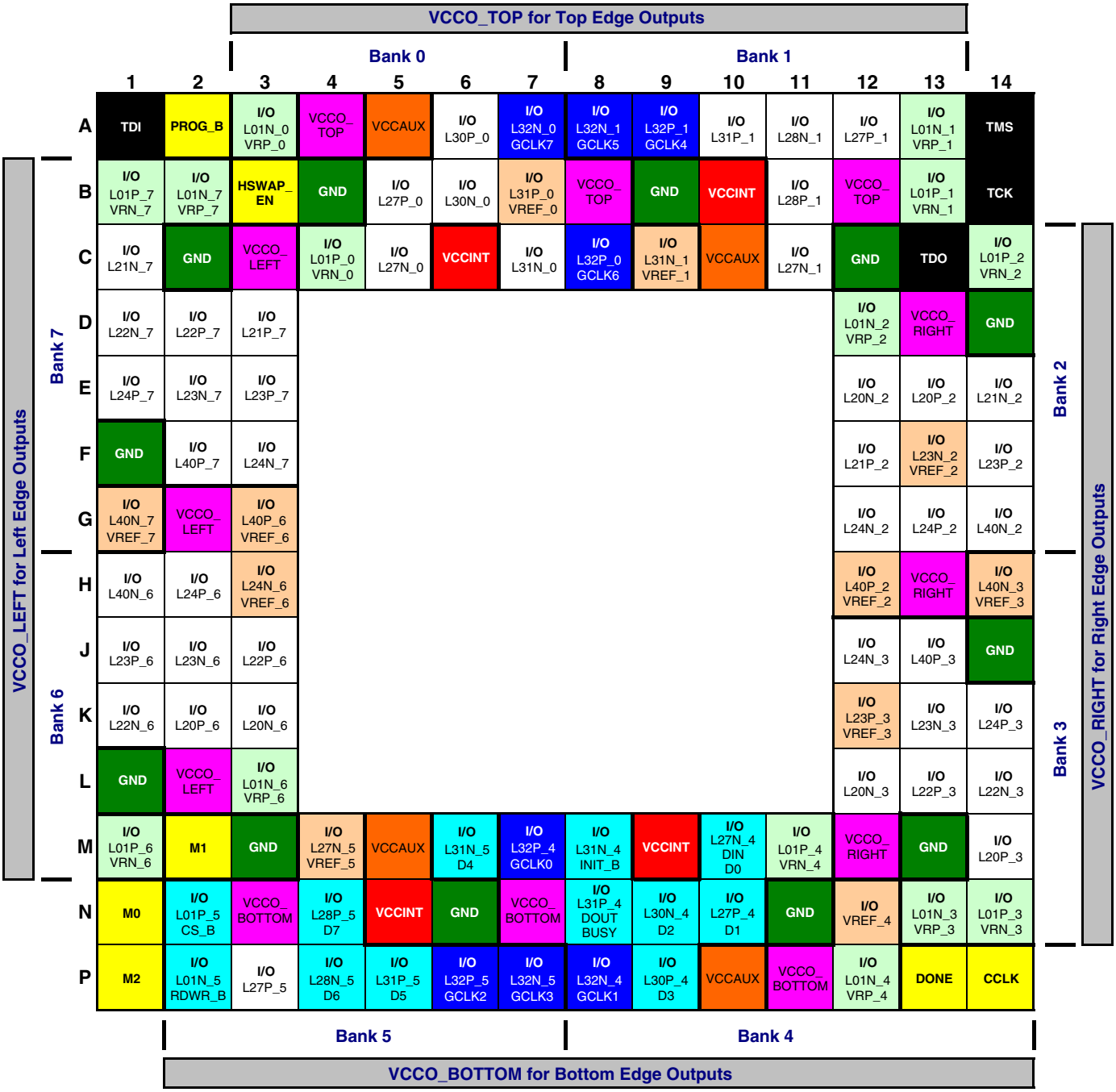

Figure 45: **CP132 Package Footprint (Top View). Note pin 1 indicator in top-left corner and logo orientation.**

44	**I/O:** Unrestricted, general-purpose user I/O	12	**DUAL:** Configuration pin, then possible user I/O	11	**VREF:** User I/O or input voltage reference for bank
14	**DCI:** User I/O or reference resistor input for bank	8	**GCLK:** User I/O, input, or global buffer input	12	**VCCO:** Output voltage supply for bank
7	**CONFIG:** Dedicated configuration pins	4	**JTAG:** Dedicated JTAG port pins	4	**VCCINT:** Internal core voltage supply (+1.2V)
0	**N.C.:** No unconnected pins in this package	12	**GND:** Ground	4	**VCCAUX:** Auxiliary voltage supply (+2.5V)

TQ144: 144-lead Thin Quad Flat Package

The XC3S50, the XC3S200, and the XC3S400 are available in the 144-lead thin quad flat package, TQ144. All devices share a common footprint for this package as shown in Table 91 and Figure 46.

The TQ144 package only has four separate VCCO inputs, unlike the BGA packages, which have eight separate VCCO inputs. The TQ144 package has a separate VCCO input for the top, bottom, left, and right. However, there are still eight separate I/O banks, as shown in Table 91 and Figure 46. Banks 0 and 1 share the VCCO_TOP input, Banks 2 and 3 share the VCCO_RIGHT input, Banks 4 and 5 share the VCCO_BOTTOM input, and Banks 6 and 7 share the VCCO_LEFT input.

All the package pins appear in Table 91 and are sorted by bank number, then by pin name. Pairs of pins that form a differential I/O pair appear together in the table. The table also shows the pin number for each pin and the pin type, as defined earlier.

An electronic version of this package pinout table and footprint diagram is available for download from the Xilinx website at http://www.xilinx.com/support/documentation/data_ sheets/s3_pin.zip.

Pinout Table

Table 91: **TQ144 Package Pinout**

Bank	XC3S50, XC3S200, XC3S400 Pin Name	TQ144 Pin Number	Type
0	IO_L01N_0/VRP_0	P141	DCI
0	IO_L01P_0/VRN_0	P140	DCI
0	IO_L27N_0	P137	I/O
0	IO_L27P_0	P135	I/O
0	IO_L30N_0	P132	I/O
0	IO_L30P_0	P131	I/O
0	IO_L31N_0	P130	I/O
0	IO_L31P_0/VREF_0	P129	VREF
0	IO_L32N_0/GCLK7	P128	GCLK
0	IO_L32P_0/GCLK6	P127	GCLK
1	IO	P116	I/O
1	IO_L01N_1/VRP_1	P113	DCI
1	IO_L01P_1/VRN_1	P112	DCI
1	IO_L28N_1	P119	I/O
1	IO_L28P_1	P118	I/O
1	IO_L31N_1/VREF_1	P123	VREF
1	IO_L31P_1	P122	I/O
1	IO_L32N_1/GCLK5	P125	GCLK
1	IO_L32P_1/GCLK4	P124	GCLK
2	IO_L01N_2/VRP_2	P108	DCI
2	IO_L01P_2/VRN_2	P107	DCI
2	IO_L20N_2	P105	I/O
2	IO_L20P_2	P104	I/O
2	IO_L21N_2	P103	I/O
2	IO_L21P_2	P102	I/O
2	IO_L22N_2	P100	I/O
2	IO_L22P_2	P99	I/O

Table 91: **TQ144 Package Pinout *(Cont'd)***

Bank	XC3S50, XC3S200, XC3S400 Pin Name	TQ144 Pin Number	Type
2	IO_L23N_2/VREF_2	P98	VREF
2	IO_L23P_2	P97	I/O
2	IO_L24N_2	P96	I/O
2	IO_L24P_2	P95	I/O
2	IO_L40N_2	P93	I/O
2	IO_L40P_2/VREF_2	P92	VREF
3	IO	P76	I/O
3	IO_L01N_3/VRP_3	P74	DCI
3	IO_L01P_3/VRN_3	P73	DCI
3	IO_L20N_3	P78	I/O
3	IO_L20P_3	P77	I/O
3	IO_L21N_3	P80	I/O
3	IO_L21P_3	P79	I/O
3	IO_L22N_3	P83	I/O
3	IO_L22P_3	P82	I/O
3	IO_L23N_3	P85	I/O
3	IO_L23P_3/VREF_3	P84	VREF
3	IO_L24N_3	P87	I/O
3	IO_L24P_3	P86	I/O
3	IO_L40N_3/VREF_3	P90	VREF
3	IO_L40P_3	P89	I/O
4	IO/VREF_4	P70	VREF
4	IO_L01N_4/VRP_4	P69	DCI
4	IO_L01P_4/VRN_4	P68	DCI
4	IO_L27N_4/DIN/D0	P65	DUAL
4	IO_L27P_4/D1	P63	DUAL
4	IO_L30N_4/D2	P60	DUAL
4	IO_L30P_4/D3	P59	DUAL
4	IO_L31N_4/INIT_B	P58	DUAL
4	IO_L31P_4/DOUT/BUSY	P57	DUAL
4	IO_L32N_4/GCLK1	P56	GCLK
4	IO_L32P_4/GCLK0	P55	GCLK
5	IO/VREF_5	P44	VREF
5	IO_L01N_5/RDWR_B	P41	DUAL
5	IO_L01P_5/CS_B	P40	DUAL
5	IO_L28N_5/D6	P47	DUAL
5	IO_L28P_5/D7	P46	DUAL
5	IO_L31N_5/D4	P51	DUAL
5	IO_L31P_5/D5	P50	DUAL
5	IO_L32N_5/GCLK3	P53	GCLK

Table 91: **TQ144 Package Pinout *(Cont'd)***

Bank	XC3S50, XC3S200, XC3S400 Pin Name	TQ144 Pin Number	Type
5	IO_L32P_5/GCLK2	P52	GCLK
6	IO_L01N_6/VRP_6	P36	DCI
6	IO_L01P_6/VRN_6	P35	DCI
6	IO_L20N_6	P33	I/O
6	IO_L20P_6	P32	I/O
6	IO_L21N_6	P31	I/O
6	IO_L21P_6	P30	I/O
6	IO_L22N_6	P28	I/O
6	IO_L22P_6	P27	I/O
6	IO_L23N_6	P26	I/O
6	IO_L23P_6	P25	I/O
6	IO_L24N_6/VREF_6	P24	VREF
6	IO_L24P_6	P23	I/O
6	IO_L40N_6	P21	I/O
6	IO_L40P_6/VREF_6	P20	VREF
7	IO/VREF_7	P4	VREF
7	IO_L01N_7/VRP_7	P2	DCI
7	IO_L01P_7/VRN_7	P1	DCI
7	IO_L20N_7	P6	I/O
7	IO_L20P_7	P5	I/O
7	IO_L21N_7	P8	I/O
7	IO_L21P_7	P7	I/O
7	IO_L22N_7	P11	I/O
7	IO_L22P_7	P10	I/O
7	IO_L23N_7	P13	I/O
7	IO_L23P_7	P12	I/O
7	IO_L24N_7	P15	I/O
7	IO_L24P_7	P14	I/O
7	IO_L40N_7/VREF_7	P18	VREF
7	IO_L40P_7	P17	I/O
0,1	VCCO_TOP	P126	VCCO
0,1	VCCO_TOP	P138	VCCO
0,1	VCCO_TOP	P115	VCCO
2,3	VCCO_RIGHT	P106	VCCO
2,3	VCCO_RIGHT	P75	VCCO
2,3	VCCO_RIGHT	P91	VCCO
4,5	VCCO_BOTTOM	P54	VCCO
4,5	VCCO_BOTTOM	P43	VCCO
4,5	VCCO_BOTTOM	P66	VCCO
6,7	VCCO_LEFT	P19	VCCO

Table 91: **TQ144 Package Pinout *(Cont'd)***

Bank	XC3S50, XC3S200, XC3S400 Pin Name	TQ144 Pin Number	Type
6,7	VCCO_LEFT	P34	VCCO
6,7	VCCO_LEFT	P3	VCCO
N/A	GND	P136	GND
N/A	GND	P139	GND
N/A	GND	P114	GND
N/A	GND	P117	GND
N/A	GND	P94	GND
N/A	GND	P101	GND
N/A	GND	P81	GND
N/A	GND	P88	GND
N/A	GND	P64	GND
N/A	GND	P67	GND
N/A	GND	P42	GND
N/A	GND	P45	GND
N/A	GND	P22	GND
N/A	GND	P29	GND
N/A	GND	P9	GND
N/A	GND	P16	GND
N/A	VCCAUX	P134	VCCAUX
N/A	VCCAUX	P120	VCCAUX
N/A	VCCAUX	P62	VCCAUX
N/A	VCCAUX	P48	VCCAUX
N/A	VCCINT	P133	VCCINT
N/A	VCCINT	P121	VCCINT
N/A	VCCINT	P61	VCCINT
N/A	VCCINT	P49	VCCINT
VCCAUX	CCLK	P72	CONFIG
VCCAUX	DONE	P71	CONFIG
VCCAUX	HSWAP_EN	P142	CONFIG
VCCAUX	M0	P38	CONFIG
VCCAUX	M1	P37	CONFIG
VCCAUX	M2	P39	CONFIG
VCCAUX	PROG_B	P143	CONFIG
VCCAUX	TCK	P110	JTAG
VCCAUX	TDI	P144	JTAG
VCCAUX	TDO	P109	JTAG
VCCAUX	TMS	P111	JTAG

User I/Os by Bank

Table 92 indicates how the available user-I/O pins are distributed between the eight I/O banks on the TQ144 package.

Table 92: **User I/Os Per Bank in TQ144 Package**

Package Edge	I/O Bank	Maximum I/O	All Possible I/O Pins by Type				
			I/O	DUAL	DCI	VREF	GCLK
Top	0	10	5	0	2	1	2
	1	9	4	0	2	1	2
Right	2	14	10	0	2	2	0
	3	15	11	0	2	2	0
Bottom	4	11	0	6	2	1	2
	5	9	0	6	0	1	2
Left	6	14	10	0	2	2	0
	7	15	11	0	2	2	0

TQ144 Footprint

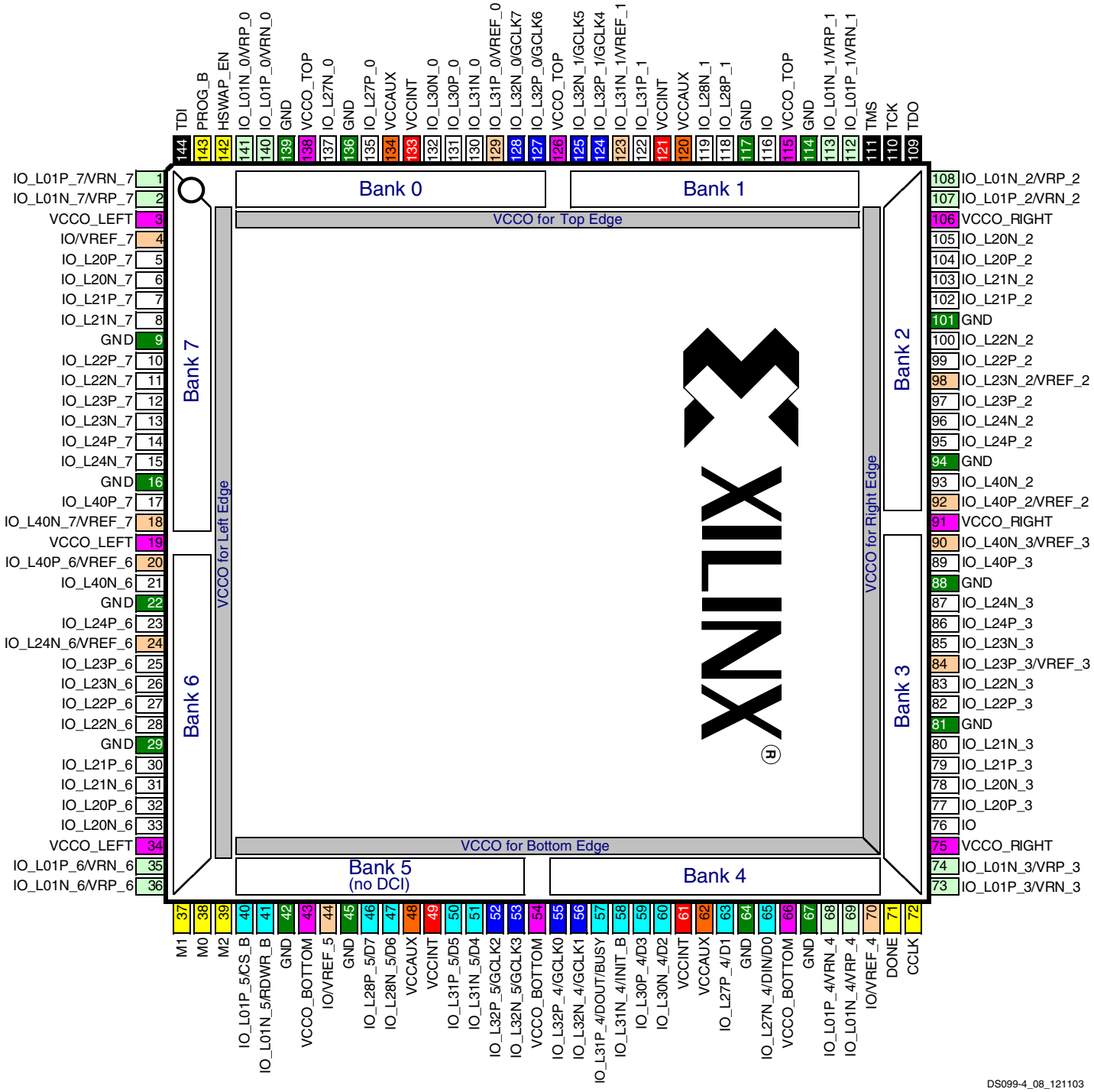

Figure 46: **TQ144 Package Footprint (Top View). Note pin 1 indicator in top-left corner and logo orientation.**

51	**I/O:** Unrestricted, general-purpose user I/O	12	**DUAL:** Configuration pin, then possible user I/O	12	**VREF:** User I/O or input voltage reference for bank
14	**DCI:** User I/O or reference resistor input for bank	8	**GCLK:** User I/O or global clock buffer input	12	**VCCO:** Output voltage supply for bank
7	**CONFIG:** Dedicated configuration pins	4	**JTAG:** Dedicated JTAG port pins	4	**VCCINT:** Internal core voltage supply (+1.2V)
0	**N.C.:** No unconnected pins in this package	16	**GND:** Ground	4	**VCCAUX:** Auxiliary voltage supply (+2.5V)

PQ208: 208-lead Plastic Quad Flat Pack

The 208-lead plastic quad flat package, PQ208, supports three different Spartan-3 devices, including the XC3S50, the XC3S200, and the XC3S400. The footprints for the XC3S200 and XC3S400 are identical, as shown in Table 93 and Figure 47. The XC3S50, however, has fewer I/O pins resulting in 17 unconnected pins on the PQ208 package, labeled as "N.C." In Table 93 and Figure 47, these unconnected pins are indicated with a black diamond symbol (◆).

All the package pins appear in Table 93 and are sorted by bank number, then by pin name. Pairs of pins that form a differential I/O pair appear together in the table. The table also shows the pin number for each pin and the pin type, as defined earlier.

If there is a difference between the XC3S50 pinout and the pinout for the XC3S200 and XC3S400, then that difference is highlighted in Table 93. If the table entry is shaded grey, then there is an unconnected pin on the XC3S50 that maps to a user-I/O pin on the XC3S200 and XC3S400. If the table entry is shaded tan, then the unconnected pin on the XC3S50 maps to a VREF-type pin on the XC3S200 and XC3S400. If the other VREF pins in the bank all connect to a voltage reference to support a special I/O standard, then also connect the N.C. pin on the XC3S50 to the same VREF voltage. This provides maximum flexibility as you could potentially migrate a design from the XC3S50 device to an XC3S200 or XC3S400 FPGA without changing the printed circuit board.

An electronic version of this package pinout table and footprint diagram is available for download from the Xilinx website at http://www.xilinx.com/support/documentation/data_ sheets/s3_pin.zip

Pinout Table

Table 93: **PQ208 Package Pinout**

Bank	XC3S50 Pin Name	XC3S200, XC3S400 Pin Names	PQ208 Pin Number	Type
0	IO	IO	P189	I/O
0	IO	IO	P197	I/O
0	N.C. (◆)	IO/VREF_0	P200	VREF
0	IO/VREF_0	IO/VREF_0	P205	VREF
0	IO_L01N_0/VRP_0	IO_L01N_0/VRP_0	P204	DCI
0	IO_L01P_0/VRN_0	IO_L01P_0/VRN_0	P203	DCI
0	IO_L25N_0	IO_L25N_0	P199	I/O
0	IO_L25P_0	IO_L25P_0	P198	I/O
0	IO_L27N_0	IO_L27N_0	P196	I/O
0	IO_L27P_0	IO_L27P_0	P194	I/O
0	IO_L30N_0	IO_L30N_0	P191	I/O
0	IO_L30P_0	IO_L30P_0	P190	I/O
0	IO_L31N_0	IO_L31N_0	P187	I/O
0	IO_L31P_0/VREF_0	IO_L31P_0/VREF_0	P185	VREF
0	IO_L32N_0/GCLK7	IO_L32N_0/GCLK7	P184	GCLK
0	IO_L32P_0/GCLK6	IO_L32P_0/GCLK6	P183	GCLK
0	VCCO_0	VCCO_0	P188	VCCO
0	VCCO_0	VCCO_0	P201	VCCO
1	IO	IO	P167	I/O
1	IO	IO	P175	I/O
1	IO	IO	P182	I/O
1	IO_L01N_1/VRP_1	IO_L01N_1/VRP_1	P162	DCI
1	IO_L01P_1/VRN_1	IO_L01P_1/VRN_1	P161	DCI

Table 93: **PQ208 Package Pinout *(Cont'd)***

Bank	XC3S50 Pin Name	XC3S200, XC3S400 Pin Names	PQ208 Pin Number	Type
1	IO_L10N_1/VREF_1	IO_L10N_1/VREF_1	P166	VREF
1	IO_L10P_1	IO_L10P_1	P165	I/O
1	IO_L27N_1	IO_L27N_1	P169	I/O
1	IO_L27P_1	IO_L27P_1	P168	I/O
1	IO_L28N_1	IO_L28N_1	P172	I/O
1	IO_L28P_1	IO_L28P_1	P171	I/O
1	IO_L31N_1/VREF_1	IO_L31N_1/VREF_1	P178	VREF
1	IO_L31P_1	IO_L31P_1	P176	I/O
1	IO_L32N_1/GCLK5	IO_L32N_1/GCLK5	P181	GCLK
1	IO_L32P_1/GCLK4	IO_L32P_1/GCLK4	P180	GCLK
1	VCCO_1	VCCO_1	P164	VCCO
1	VCCO_1	VCCO_1	P177	VCCO
2	N.C. (◆)	IO/VREF_2	P154	VREF
2	IO_L01N_2/VRP_2	IO_L01N_2/VRP_2	P156	DCI
2	IO_L01P_2/VRN_2	IO_L01P_2/VRN_2	P155	DCI
2	IO_L19N_2	IO_L19N_2	P152	I/O
2	IO_L19P_2	IO_L19P_2	P150	I/O
2	IO_L20N_2	IO_L20N_2	P149	I/O
2	IO_L20P_2	IO_L20P_2	P148	I/O
2	IO_L21N_2	IO_L21N_2	P147	I/O
2	IO_L21P_2	IO_L21P_2	P146	I/O
2	IO_L22N_2	IO_L22N_2	P144	I/O
2	IO_L22P_2	IO_L22P_2	P143	I/O
2	IO_L23N_2/VREF_2	IO_L23N_2/VREF_2	P141	VREF
2	IO_L23P_2	IO_L23P_2	P140	I/O
2	IO_L24N_2	IO_L24N_2	P139	I/O
2	IO_L24P_2	IO_L24P_2	P138	I/O
2	N.C. (◆)	IO_L39N_2	P137	I/O
2	N.C. (◆)	IO_L39P_2	P135	I/O
2	IO_L40N_2	IO_L40N_2	P133	I/O
2	IO_L40P_2/VREF_2	IO_L40P_2/VREF_2	P132	VREF
2	VCCO_2	VCCO_2	P136	VCCO
2	VCCO_2	VCCO_2	P153	VCCO
3	IO_L01N_3/VRP_3	IO_L01N_3/VRP_3	P107	DCI
3	IO_L01P_3/VRN_3	IO_L01P_3/VRN_3	P106	DCI
3	N.C. (◆)	IO_L17N_3	P109	I/O
3	N.C. (◆)	IO_L17P_3/VREF_3	P108	VREF
3	IO_L19N_3	IO_L19N_3	P113	I/O
3	IO_L19P_3	IO_L19P_3	P111	I/O
3	IO_L20N_3	IO_L20N_3	P115	I/O

Table 93: **PQ208 Package Pinout *(Cont'd)***

Bank	XC3S50 Pin Name	XC3S200, XC3S400 Pin Names	PQ208 Pin Number	Type
3	IO_L20P_3	IO_L20P_3	P114	I/O
3	IO_L21N_3	IO_L21N_3	P117	I/O
3	IO_L21P_3	IO_L21P_3	P116	I/O
3	IO_L22N_3	IO_L22N_3	P120	I/O
3	IO_L22P_3	IO_L22P_3	P119	I/O
3	IO_L23N_3	IO_L23N_3	P123	I/O
3	IO_L23P_3/VREF_3	IO_L23P_3/VREF_3	P122	VREF
3	IO_L24N_3	IO_L24N_3	P125	I/O
3	IO_L24P_3	IO_L24P_3	P124	I/O
3	N.C. (◆)	IO_L39N_3	P128	I/O
3	N.C. (◆)	IO_L39P_3	P126	I/O
3	IO_L40N_3/VREF_3	IO_L40N_3/VREF_3	P131	VREF
3	IO_L40P_3	IO_L40P_3	P130	I/O
3	VCCO_3	VCCO_3	P110	VCCO
3	VCCO_3	VCCO_3	P127	VCCO
4	IO	IO	P93	I/O
4	N.C. (◆)	IO	P97	I/O
4	IO/VREF_4	IO/VREF_4	P85	VREF
4	N.C. (◆)	IO/VREF_4	P96	VREF
4	IO/VREF_4	IO/VREF_4	P102	VREF
4	IO_L01N_4/VRP_4	IO_L01N_4/VRP_4	P101	DCI
4	IO_L01P_4/VRN_4	IO_L01P_4/VRN_4	P100	DCI
4	IO_L25N_4	IO_L25N_4	P95	I/O
4	IO_L25P_4	IO_L25P_4	P94	I/O
4	IO_L27N_4/DIN/D0	IO_L27N_4/DIN/D0	P92	DUAL
4	IO_L27P_4/D1	IO_L27P_4/D1	P90	DUAL
4	IO_L30N_4/D2	IO_L30N_4/D2	P87	DUAL
4	IO_L30P_4/D3	IO_L30P_4/D3	P86	DUAL
4	IO_L31N_4/INIT_B	IO_L31N_4/INIT_B	P83	DUAL
4	IO_L31P_4/DOUT/BUSY	IO_L31P_4/DOUT/BUSY	P81	DUAL
4	IO_L32N_4/GCLK1	IO_L32N_4/GCLK1	P80	GCLK
4	IO_L32P_4/GCLK0	IO_L32P_4/GCLK0	P79	GCLK
4	VCCO_4	VCCO_4	P84	VCCO
4	VCCO_4	VCCO_4	P98	VCCO
5	IO	IO	P63	I/O
5	IO	IO	P71	I/O
5	IO/VREF_5	IO/VREF_5	P78	VREF
5	IO_L01N_5/RDWR_B	IO_L01N_5/RDWR_B	P58	DUAL
5	IO_L01P_5/CS_B	IO_L01P_5/CS_B	P57	DUAL
5	IO_L10N_5/VRP_5	IO_L10N_5/VRP_5	P62	DCI

Table 93: **PQ208 Package Pinout *(Cont'd)***

Bank	XC3S50 Pin Name	XC3S200, XC3S400 Pin Names	PQ208 Pin Number	Type
5	IO_L10P_5/VRN_5	IO_L10P_5/VRN_5	P61	DCI
5	IO_L27N_5/VREF_5	IO_L27N_5/VREF_5	P65	VREF
5	IO_L27P_5	IO_L27P_5	P64	I/O
5	IO_L28N_5/D6	IO_L28N_5/D6	P68	DUAL
5	IO_L28P_5/D7	IO_L28P_5/D7	P67	DUAL
5	IO_L31N_5/D4	IO_L31N_5/D4	P74	DUAL
5	IO_L31P_5/D5	IO_L31P_5/D5	P72	DUAL
5	IO_L32N_5/GCLK3	IO_L32N_5/GCLK3	P77	GCLK
5	IO_L32P_5/GCLK2	IO_L32P_5/GCLK2	P76	GCLK
5	VCCO_5	VCCO_5	P60	VCCO
5	VCCO_5	VCCO_5	P73	VCCO
6	N.C. (◆)	IO/VREF_6	P50	VREF
6	IO_L01N_6/VRP_6	IO_L01N_6/VRP_6	P52	DCI
6	IO_L01P_6/VRN_6	IO_L01P_6/VRN_6	P51	DCI
6	IO_L19N_6	IO_L19N_6	P48	I/O
6	IO_L19P_6	IO_L19P_6	P46	I/O
6	IO_L20N_6	IO_L20N_6	P45	I/O
6	IO_L20P_6	IO_L20P_6	P44	I/O
6	IO_L21N_6	IO_L21N_6	P43	I/O
6	IO_L21P_6	IO_L21P_6	P42	I/O
6	IO_L22N_6	IO_L22N_6	P40	I/O
6	IO_L22P_6	IO_L22P_6	P39	I/O
6	IO_L23N_6	IO_L23N_6	P37	I/O
6	IO_L23P_6	IO_L23P_6	P36	I/O
6	IO_L24N_6/VREF_6	IO_L24N_6/VREF_6	P35	VREF
6	IO_L24P_6	IO_L24P_6	P34	I/O
6	N.C. (◆)	IO_L39N_6	P33	I/O
6	N.C. (◆)	IO_L39P_6	P31	I/O
6	IO_L40N_6	IO_L40N_6	P29	I/O
6	IO_L40P_6/VREF_6	IO_L40P_6/VREF_6	P28	VREF
6	VCCO_6	VCCO_6	P32	VCCO
6	VCCO_6	VCCO_6	P49	VCCO
7	IO_L01N_7/VRP_7	IO_L01N_7/VRP_7	P3	DCI
7	IO_L01P_7/VRN_7	IO_L01P_7/VRN_7	P2	DCI
7	N.C. (◆)	IO_L16N_7	P5	I/O
7	N.C. (◆)	IO_L16P_7/VREF_7	P4	VREF
7	IO_L19N_7/VREF_7	IO_L19N_7/VREF_7	P9	VREF
7	IO_L19P_7	IO_L19P_7	P7	I/O
7	IO_L20N_7	IO_L20N_7	P11	I/O
7	IO_L20P_7	IO_L20P_7	P10	I/O

Table 93: **PQ208 Package Pinout *(Cont'd)***

Bank	XC3S50 Pin Name	XC3S200, XC3S400 Pin Names	PQ208 Pin Number	Type
7	IO_L21N_7	IO_L21N_7	P13	I/O
7	IO_L21P_7	IO_L21P_7	P12	I/O
7	IO_L22N_7	IO_L22N_7	P16	I/O
7	IO_L22P_7	IO_L22P_7	P15	I/O
7	IO_L23N_7	IO_L23N_7	P19	I/O
7	IO_L23P_7	IO_L23P_7	P18	I/O
7	IO_L24N_7	IO_L24N_7	P21	I/O
7	IO_L24P_7	IO_L24P_7	P20	I/O
7	N.C. (◆)	IO_L39N_7	P24	I/O
7	N.C. (◆)	IO_L39P_7	P22	I/O
7	IO_L40N_7/VREF_7	IO_L40N_7/VREF_7	P27	VREF
7	IO_L40P_7	IO_L40P_7	P26	I/O
7	VCCO_7	VCCO_7	P6	VCCO
7	VCCO_7	VCCO_7	P23	VCCO
N/A	GND	GND	P1	GND
N/A	GND	GND	P186	GND
N/A	GND	GND	P195	GND
N/A	GND	GND	P202	GND
N/A	GND	GND	P163	GND
N/A	GND	GND	P170	GND
N/A	GND	GND	P179	GND
N/A	GND	GND	P134	GND
N/A	GND	GND	P145	GND
N/A	GND	GND	P151	GND
N/A	GND	GND	P157	GND
N/A	GND	GND	P112	GND
N/A	GND	GND	P118	GND
N/A	GND	GND	P129	GND
N/A	GND	GND	P82	GND
N/A	GND	GND	P91	GND
N/A	GND	GND	P99	GND
N/A	GND	GND	P105	GND
N/A	GND	GND	P53	GND
N/A	GND	GND	P59	GND
N/A	GND	GND	P66	GND
N/A	GND	GND	P75	GND
N/A	GND	GND	P30	GND
N/A	GND	GND	P41	GND
N/A	GND	GND	P47	GND
N/A	GND	GND	P8	GND

Table 93: **PQ208 Package Pinout *(Cont'd)***

Bank	XC3S50 Pin Name	XC3S200, XC3S400 Pin Names	PQ208 Pin Number	Type
N/A	GND	GND	P14	GND
N/A	GND	GND	P25	GND
N/A	VCCAUX	VCCAUX	P193	VCCAUX
N/A	VCCAUX	VCCAUX	P173	VCCAUX
N/A	VCCAUX	VCCAUX	P142	VCCAUX
N/A	VCCAUX	VCCAUX	P121	VCCAUX
N/A	VCCAUX	VCCAUX	P89	VCCAUX
N/A	VCCAUX	VCCAUX	P69	VCCAUX
N/A	VCCAUX	VCCAUX	P38	VCCAUX
N/A	VCCAUX	VCCAUX	P17	VCCAUX
N/A	VCCINT	VCCINT	P192	VCCINT
N/A	VCCINT	VCCINT	P174	VCCINT
N/A	VCCINT	VCCINT	P88	VCCINT
N/A	VCCINT	VCCINT	P70	VCCINT
VCCAUX	CCLK	CCLK	P104	CONFIG
VCCAUX	DONE	DONE	P103	CONFIG
VCCAUX	HSWAP_EN	HSWAP_EN	P206	CONFIG
VCCAUX	M0	M0	P55	CONFIG
VCCAUX	M1	M1	P54	CONFIG
VCCAUX	M2	M2	P56	CONFIG
VCCAUX	PROG_B	PROG_B	P207	CONFIG
VCCAUX	TCK	TCK	P159	JTAG
VCCAUX	TDI	TDI	P208	JTAG
VCCAUX	TDO	TDO	P158	JTAG
VCCAUX	TMS	TMS	P160	JTAG

User I/Os by Bank

Table 94 indicates how the available user-I/O pins are distributed between the eight I/O banks for the XC3S50 in the PQ208 package. Similarly, Table 95 shows how the available user-I/O pins are distributed between the eight I/O banks for the XC3S200 and XC3S400 in the PQ208 package.

Table 94: **User I/Os Per Bank for XC3S50 in PQ208 Package**

Package Edge	I/O Bank	Maximum I/O	All Possible I/O Pins by Type				
			I/O	DUAL	DCI	VREF	GCLK
Top	0	15	9	0	2	2	2
	1	15	9	0	2	2	2
Right	2	16	13	0	2	2	0
	3	16	12	0	2	2	0
Bottom	4	15	3	6	2	2	2
	5	15	3	6	2	2	2
Left	6	16	12	0	2	2	0
	7	16	12	0	2	2	0

Table 95: **User I/Os Per Bank for XC3S200 and XC3S400 in PQ208 Package**

Package Edge	I/O Bank	Maximum I/O	All Possible I/O Pins by Type				
			I/O	DUAL	DCI	VREF	GCLK
Top	0	16	9	0	2	3	2
	1	15	9	0	2	2	2
Right	2	19	14	0	2	3	0
	3	20	15	0	2	3	0
Bottom	4	17	4	6	2	3	2
	5	15	3	6	2	2	2
Left	6	19	14	0	2	3	0
	7	20	15	0	2	3	0

PQ208 Footprint

Left Half of Package (Top View)

XC3S50
(124 max. user I/O)

72	**I/O:** Unrestricted, general-purpose user I/O
16	**VREF:** User I/O or input voltage reference for bank
17	**N.C.:** Unconnected pins for XC3S50 (◆)

XC3S200, XC3S400
(141 max user I/O)

83	**I/O:** Unrestricted, general-purpose user I/O
22	**VREF:** User I/O or input voltage reference for bank
0	**N.C.:** No unconnected pins in this package

All devices

12	**DUAL:** Configuration pin, then possible user I/O
8	**GCLK:** User I/O or global clock buffer input
16	**DCI:** User I/O or reference resistor input for bank
7	**CONFIG:** Dedicated configuration pins
4	**JTAG:** Dedicated JTAG port pins
4	**VCCINT:** Internal core voltage supply (+1.2V)
12	**VCCO:** Output voltage supply for bank
8	**VCCAUX:** Auxiliary voltage supply (+2.5V)
28	**GND:** Ground

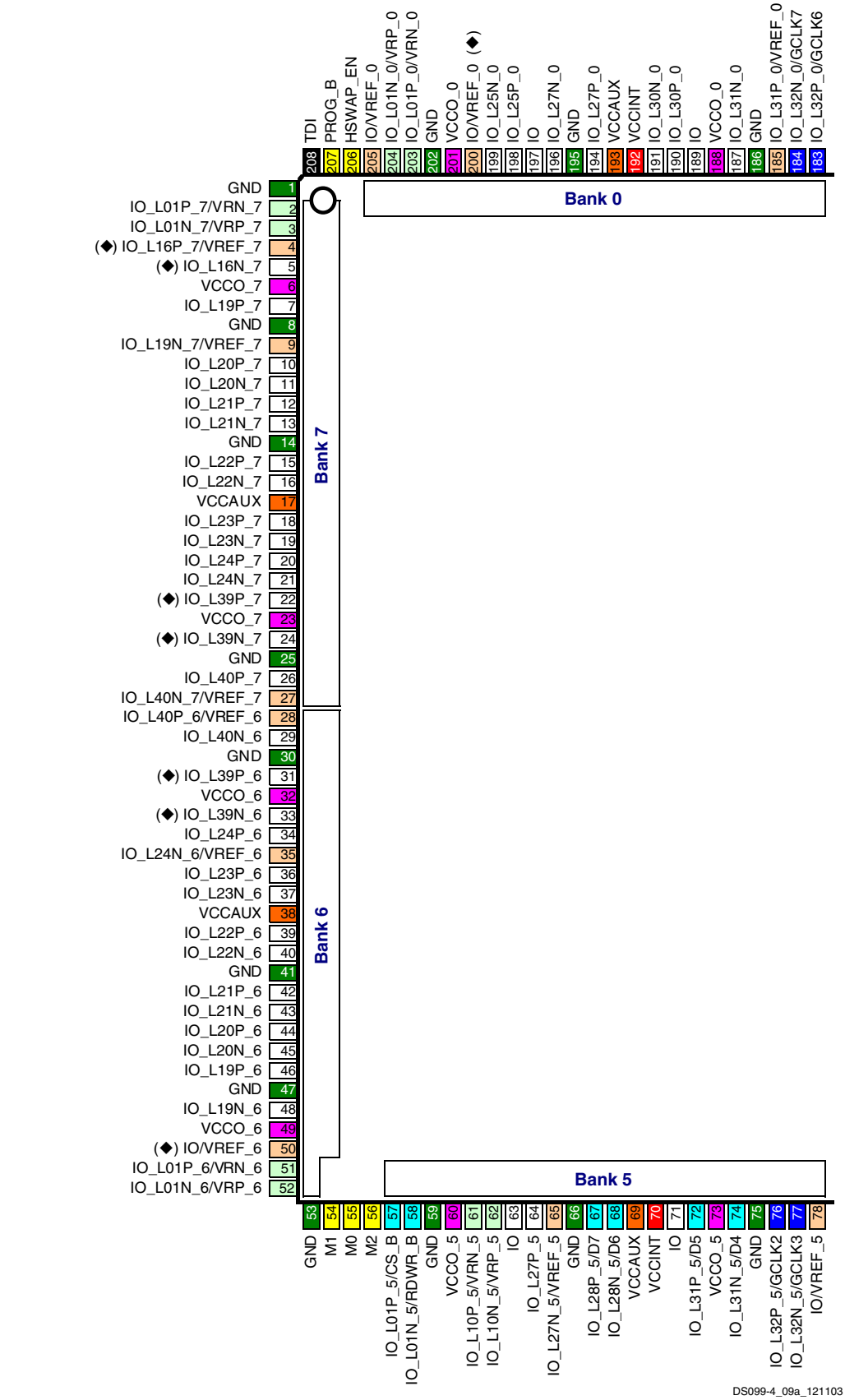

Figure 47: **PQ208 Package Footprint (Top View). Note pin 1 indicator in top-left corner and logo orientation.**

Right Half of Package (Top View)

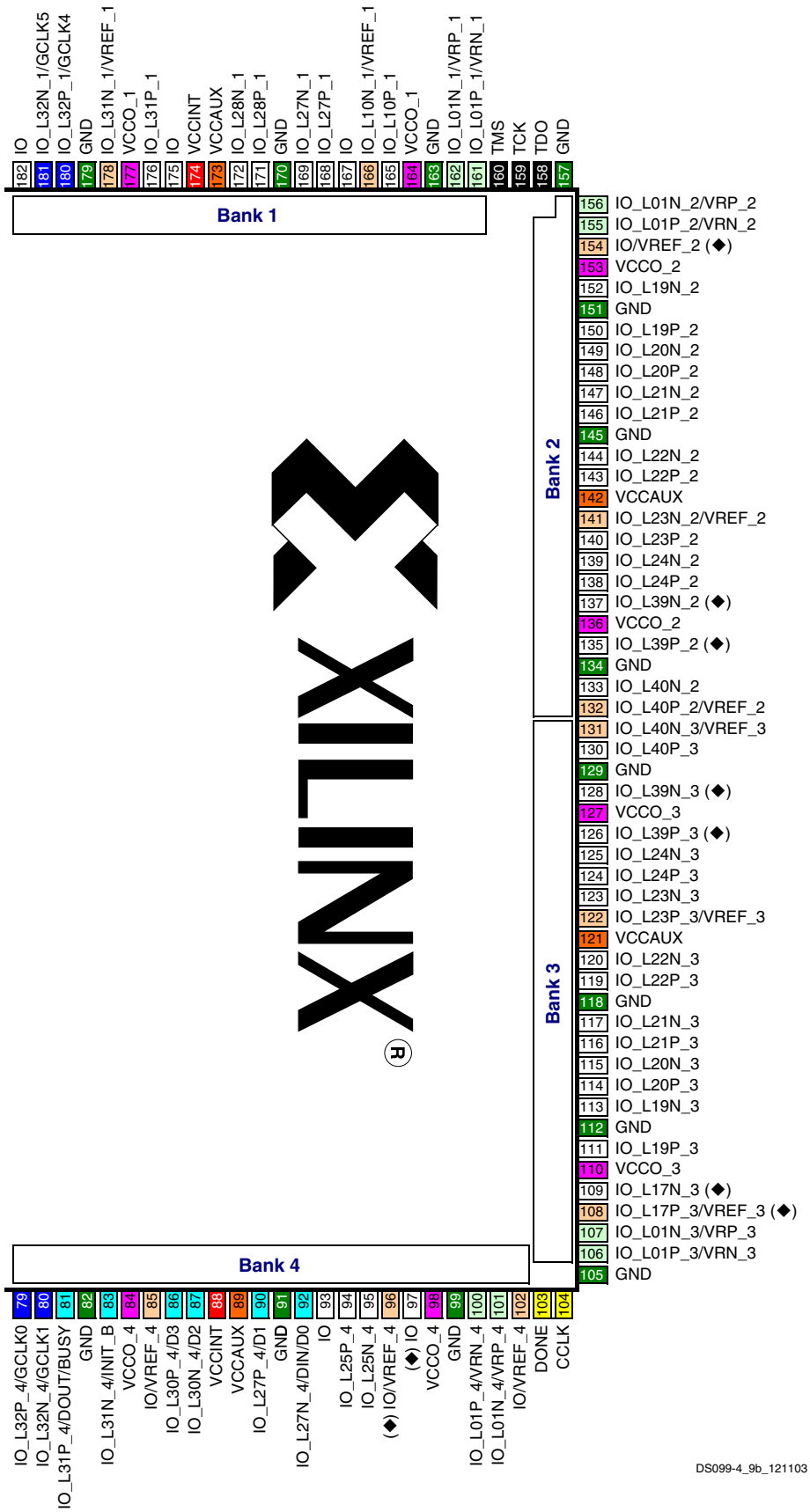

Figure 48: PQ208 Package Footprint (Top View) Continued

FT256: 256-lead Fine-pitch Thin Ball Grid Array

The 256-lead fine-pitch thin ball grid array package, FT256, supports three different Spartan-3 devices, including the XC3S200, the XC3S400, and the XC3S1000. The footprints for all three devices are identical, as shown in Table 96 and Figure 49.

All the package pins appear in Table 96 and are sorted by bank number, then by pin name. Pairs of pins that form a differential I/O pair appear together in the table. The table also shows the pin number for each pin and the pin type, as defined earlier.

An electronic version of this package pinout table and footprint diagram is available for download from the Xilinx website at http://www.xilinx.com/support/documentation/data_ sheets/s3_pin.zip.

Pinout Table

Table 96: **FT256 Package Pinout**

Bank	XC3S200, XC3S400, XC3S1000 Pin Name	FT256 Pin Number	Type
0	IO	A5	I/O
0	IO	A7	I/O
0	IO/VREF_0	A3	VREF
0	IO/VREF_0	D5	VREF
0	IO_L01N_0/VRP_0	B4	DCI
0	IO_L01P_0/VRN_0	A4	DCI
0	IO_L25N_0	C5	I/O
0	IO_L25P_0	B5	I/O
0	IO_L27N_0	E6	I/O
0	IO_L27P_0	D6	I/O
0	IO_L28N_0	C6	I/O
0	IO_L28P_0	B6	I/O
0	IO_L29N_0	E7	I/O
0	IO_L29P_0	D7	I/O
0	IO_L30N_0	C7	I/O
0	IO_L30P_0	B7	I/O
0	IO_L31N_0	D8	I/O
0	IO_L31P_0/VREF_0	C8	VREF
0	IO_L32N_0/GCLK7	B8	GCLK
0	IO_L32P_0/GCLK6	A8	GCLK
0	VCCO_0	E8	VCCO
0	VCCO_0	F7	VCCO
0	VCCO_0	F8	VCCO
1	IO	A9	I/O
1	IO	A12	I/O
1	IO	C10	I/O
1	IO/VREF_1	D12	VREF
1	IO_L01N_1/VRP_1	A14	DCI
1	IO_L01P_1/VRN_1	B14	DCI

Table 96: **FT256 Package Pinout *(Cont'd)***

Bank	XC3S200, XC3S400, XC3S1000 Pin Name	FT256 Pin Number	Type
1	IO_L10N_1/VREF_1	A13	VREF
1	IO_L10P_1	B13	I/O
1	IO_L27N_1	B12	I/O
1	IO_L27P_1	C12	I/O
1	IO_L28N_1	D11	I/O
1	IO_L28P_1	E11	I/O
1	IO_L29N_1	B11	I/O
1	IO_L29P_1	C11	I/O
1	IO_L30N_1	D10	I/O
1	IO_L30P_1	E10	I/O
1	IO_L31N_1/VREF_1	A10	VREF
1	IO_L31P_1	B10	I/O
1	IO_L32N_1/GCLK5	C9	GCLK
1	IO_L32P_1/GCLK4	D9	GCLK
1	VCCO_1	E9	VCCO
1	VCCO_1	F9	VCCO
1	VCCO_1	F10	VCCO
2	IO	G16	I/O
2	IO_L01N_2/VRP_2	B16	DCI
2	IO_L01P_2/VRN_2	C16	DCI
2	IO_L16N_2	C15	I/O
2	IO_L16P_2	D14	I/O
2	IO_L17N_2	D15	I/O
2	IO_L17P_2/VREF_2	D16	VREF
2	IO_L19N_2	E13	I/O
2	IO_L19P_2	E14	I/O
2	IO_L20N_2	E15	I/O
2	IO_L20P_2	E16	I/O
2	IO_L21N_2	F12	I/O
2	IO_L21P_2	F13	I/O
2	IO_L22N_2	F14	I/O
2	IO_L22P_2	F15	I/O
2	IO_L23N_2/VREF_2	G12	VREF
2	IO_L23P_2	G13	I/O
2	IO_L24N_2	G14	I/O
2	IO_L24P_2	G15	I/O
2	IO_L39N_2	H13	I/O
2	IO_L39P_2	H14	I/O
2	IO_L40N_2	H15	I/O
2	IO_L40P_2/VREF_2	H16	VREF

Table 96: **FT256 Package Pinout *(Cont'd)***

Bank	XC3S200, XC3S400, XC3S1000 Pin Name	FT256 Pin Number	Type
2	VCCO_2	G11	VCCO
2	VCCO_2	H11	VCCO
2	VCCO_2	H12	VCCO
3	IO	K15	I/O
3	IO_L01N_3/VRP_3	P16	DCI
3	IO_L01P_3/VRN_3	R16	DCI
3	IO_L16N_3	P15	I/O
3	IO_L16P_3	P14	I/O
3	IO_L17N_3	N16	I/O
3	IO_L17P_3/VREF_3	N15	VREF
3	IO_L19N_3	M14	I/O
3	IO_L19P_3	N14	I/O
3	IO_L20N_3	M16	I/O
3	IO_L20P_3	M15	I/O
3	IO_L21N_3	L13	I/O
3	IO_L21P_3	M13	I/O
3	IO_L22N_3	L15	I/O
3	IO_L22P_3	L14	I/O
3	IO_L23N_3	K12	I/O
3	IO_L23P_3/VREF_3	L12	VREF
3	IO_L24N_3	K14	I/O
3	IO_L24P_3	K13	I/O
3	IO_L39N_3	J14	I/O
3	IO_L39P_3	J13	I/O
3	IO_L40N_3/VREF_3	J16	VREF
3	IO_L40P_3	K16	I/O
3	VCCO_3	J11	VCCO
3	VCCO_3	J12	VCCO
3	VCCO_3	K11	VCCO
4	IO	T12	I/O
4	IO	T14	I/O
4	IO/VREF_4	N12	VREF
4	IO/VREF_4	P13	VREF
4	IO/VREF_4	T10	VREF
4	IO_L01N_4/VRP_4	R13	DCI
4	IO_L01P_4/VRN_4	T13	DCI
4	IO_L25N_4	P12	I/O
4	IO_L25P_4	R12	I/O
4	IO_L27N_4/DIN/D0	M11	DUAL
4	IO_L27P_4/D1	N11	DUAL

Table 96: **FT256 Package Pinout *(Cont'd)***

Bank	XC3S200, XC3S400, XC3S1000 Pin Name	FT256 Pin Number	Type
4	IO_L28N_4	P11	I/O
4	IO_L28P_4	R11	I/O
4	IO_L29N_4	M10	I/O
4	IO_L29P_4	N10	I/O
4	IO_L30N_4/D2	P10	DUAL
4	IO_L30P_4/D3	R10	DUAL
4	IO_L31N_4/INIT_B	N9	DUAL
4	IO_L31P_4/DOUT/BUSY	P9	DUAL
4	IO_L32N_4/GCLK1	R9	GCLK
4	IO_L32P_4/GCLK0	T9	GCLK
4	VCCO_4	L9	VCCO
4	VCCO_4	L10	VCCO
4	VCCO_4	M9	VCCO
5	IO	N5	I/O
5	IO	P7	I/O
5	IO	T5	I/O
5	IO/VREF_5	T8	VREF
5	IO_L01N_5/RDWR_B	T3	DUAL
5	IO_L01P_5/CS_B	R3	DUAL
5	IO_L10N_5/VRP_5	T4	DCI
5	IO_L10P_5/VRN_5	R4	DCI
5	IO_L27N_5/VREF_5	R5	VREF
5	IO_L27P_5	P5	I/O
5	IO_L28N_5/D6	N6	DUAL
5	IO_L28P_5/D7	M6	DUAL
5	IO_L29N_5	R6	I/O
5	IO_L29P_5/VREF_5	P6	VREF
5	IO_L30N_5	N7	I/O
5	IO_L30P_5	M7	I/O
5	IO_L31N_5/D4	T7	DUAL
5	IO_L31P_5/D5	R7	DUAL
5	IO_L32N_5/GCLK3	P8	GCLK
5	IO_L32P_5/GCLK2	N8	GCLK
5	VCCO_5	L7	VCCO
5	VCCO_5	L8	VCCO
5	VCCO_5	M8	VCCO
6	IO	K1	I/O
6	IO_L01N_6/VRP_6	R1	DCI
6	IO_L01P_6/VRN_6	P1	DCI
6	IO_L16N_6	P2	I/O

Table 96: **FT256 Package Pinout *(Cont'd)***

Bank	XC3S200, XC3S400, XC3S1000 Pin Name	FT256 Pin Number	Type
6	IO_L16P_6	N3	I/O
6	IO_L17N_6	N2	I/O
6	IO_L17P_6/VREF_6	N1	VREF
6	IO_L19N_6	M4	I/O
6	IO_L19P_6	M3	I/O
6	IO_L20N_6	M2	I/O
6	IO_L20P_6	M1	I/O
6	IO_L21N_6	L5	I/O
6	IO_L21P_6	L4	I/O
6	IO_L22N_6	L3	I/O
6	IO_L22P_6	L2	I/O
6	IO_L23N_6	K5	I/O
6	IO_L23P_6	K4	I/O
6	IO_L24N_6/VREF_6	K3	VREF
6	IO_L24P_6	K2	I/O
6	IO_L39N_6	J4	I/O
6	IO_L39P_6	J3	I/O
6	IO_L40N_6	J2	I/O
6	IO_L40P_6/VREF_6	J1	VREF
6	VCCO_6	J5	VCCO
6	VCCO_6	J6	VCCO
6	VCCO_6	K6	VCCO
7	IO	G2	I/O
7	IO_L01N_7/VRP_7	C1	DCI
7	IO_L01P_7/VRN_7	B1	DCI
7	IO_L16N_7	C2	I/O
7	IO_L16P_7/VREF_7	C3	VREF
7	IO_L17N_7	D1	I/O
7	IO_L17P_7	D2	I/O
7	IO_L19N_7/VREF_7	E3	VREF
7	IO_L19P_7	D3	I/O
7	IO_L20N_7	E1	I/O
7	IO_L20P_7	E2	I/O
7	IO_L21N_7	F4	I/O
7	IO_L21P_7	E4	I/O
7	IO_L22N_7	F2	I/O
7	IO_L22P_7	F3	I/O
7	IO_L23N_7	G5	I/O
7	IO_L23P_7	F5	I/O
7	IO_L24N_7	G3	I/O

Table 96: **FT256 Package Pinout *(Cont'd)***

Bank	XC3S200, XC3S400, XC3S1000 Pin Name	FT256 Pin Number	Type
7	IO_L24P_7	G4	I/O
7	IO_L39N_7	H3	I/O
7	IO_L39P_7	H4	I/O
7	IO_L40N_7/VREF_7	H1	VREF
7	IO_L40P_7	G1	I/O
7	VCCO_7	G6	VCCO
7	VCCO_7	H5	VCCO
7	VCCO_7	H6	VCCO
N/A	GND	A1	GND
N/A	GND	A16	GND
N/A	GND	B2	GND
N/A	GND	B9	GND
N/A	GND	B15	GND
N/A	GND	F6	GND
N/A	GND	F11	GND
N/A	GND	G7	GND
N/A	GND	G8	GND
N/A	GND	G9	GND
N/A	GND	G10	GND
N/A	GND	H2	GND
N/A	GND	H7	GND
N/A	GND	H8	GND
N/A	GND	H9	GND
N/A	GND	H10	GND
N/A	GND	J7	GND
N/A	GND	J8	GND
N/A	GND	J9	GND
N/A	GND	J10	GND
N/A	GND	J15	GND
N/A	GND	K7	GND
N/A	GND	K8	GND
N/A	GND	K9	GND
N/A	GND	K10	GND
N/A	GND	L6	GND
N/A	GND	L11	GND
N/A	GND	R2	GND
N/A	GND	R8	GND
N/A	GND	R15	GND
N/A	GND	T1	GND

Table 96: **FT256 Package Pinout *(Cont'd)***

Bank	XC3S200, XC3S400, XC3S1000 Pin Name	FT256 Pin Number	Type
N/A	GND	T16	GND
N/A	VCCAUX	A6	VCCAUX
N/A	VCCAUX	A11	VCCAUX
N/A	VCCAUX	F1	VCCAUX
N/A	VCCAUX	F16	VCCAUX
N/A	VCCAUX	L1	VCCAUX
N/A	VCCAUX	L16	VCCAUX
N/A	VCCAUX	T6	VCCAUX
N/A	VCCAUX	T11	VCCAUX
N/A	VCCINT	D4	VCCINT
N/A	VCCINT	D13	VCCINT
N/A	VCCINT	E5	VCCINT
N/A	VCCINT	E12	VCCINT
N/A	VCCINT	M5	VCCINT
N/A	VCCINT	M12	VCCINT
N/A	VCCINT	N4	VCCINT
N/A	VCCINT	N13	VCCINT
VCCAUX	CCLK	T15	CONFIG
VCCAUX	DONE	R14	CONFIG
VCCAUX	HSWAP_EN	C4	CONFIG
VCCAUX	M0	P3	CONFIG
VCCAUX	M1	T2	CONFIG
VCCAUX	M2	P4	CONFIG
VCCAUX	PROG_B	B3	CONFIG
VCCAUX	TCK	C14	JTAG
VCCAUX	TDI	A2	JTAG
VCCAUX	TDO	A15	JTAG
VCCAUX	TMS	C13	JTAG

User I/Os by Bank

Table 97 indicates how the available user-I/O pins are distributed between the eight I/O banks on the FT256 package.

Table 97: **User I/Os Per Bank in FT256 Package**

Package Edge	I/O Bank	Maximum I/O	All Possible I/O Pins by Type				
			I/O	DUAL	DCI	VREF	GCLK
Top	0	20	13	0	2	3	2
	1	20	13	0	2	3	2
Right	2	23	18	0	2	3	0
	3	23	18	0	2	3	0
Bottom	4	21	8	6	2	3	2
	5	20	7	6	2	3	2
Left	6	23	18	0	2	3	0
	7	23	18	0	2	3	0

FT256 Footprint

		Bank 0						Bank 1							
	1	2	3	4	5	6	7	8	9	10	11	12	13	14	15	16
A	GND	TDI	IO VREF_0	I/O L01P_0 VRN_0	I/O	VCCAUX	I/O	I/O L32P_0 GCLK6	I/O	I/O L31N_1 VREF_1	VCCAUX	I/O	I/O L10N_1 VREF_1	I/O L01N_1 VRP_1	TDO	GND
B	I/O L01P_7 VRN_7	GND	PROG_B	I/O L01N_0 VRP_0	I/O L25P_0	I/O L28P_0	I/O L30P_0	I/O L32N_0 GCLK7	GND	I/O L31P_1	I/O L29N_1	I/O L27N_1	I/O L10P_1	I/O L01P_1 VRN_1	GND	I/O L01N_2 VRP_2
C	I/O L01N_7 VRP_7	I/O L16N_7	I/O L16P_7 VREF_7	HSWAP_ EN	I/O L25N_0	I/O L28N_0	I/O L30N_0	I/O L31P_0 VREF_0	I/O L32N_1 GCLK5	I/O	I/O L29P_1	I/O L27P_1	TMS	TCK	I/O L16N_2	I/O L01P_2 VRN_2
D	I/O L17N_7	I/O L17P_7	I/O L19P_7	VCCINT	IO VREF_0	I/O L27P_0	I/O L29P_0	I/O L31N_0	I/O L32P_1 GCLK4	I/O L30N_1	I/O L28N_1	IO VREF_1	VCCINT	I/O L16P_2	I/O L17N_2	I/O L17P_2 VREF_2
E	I/O L20N_7	I/O L20P_7	I/O L19N_7 VREF_7	I/O L21P_7	VCCINT	I/O L27N_0	I/O L29N_0	VCCO_0	VCCO_1	I/O L30P_1	I/O L28P_1	VCCINT	I/O L19N_2	I/O L19P_2	I/O L20N_2	I/O L20P_2
F	VCCAUX	I/O L22N_7	I/O L22P_7	I/O L21N_7	I/O L23P_7	GND	VCCO_0	VCCO_0	VCCO_1	VCCO_1	GND	I/O L21N_2	I/O L21P_2	I/O L22N_2	I/O L22P_2	VCCAUX
G	I/O L40P_7	I/O	I/O L24N_7	I/O L24P_7	I/O L23N_7	VCCO_7	GND	GND	GND	GND	VCCO_2	I/O L23N_2 VREF_2	I/O L23P_2	I/O L24N_2	I/O L24P_2	I/O
H	I/O L40N_7 VREF_7	GND	I/O L39N_7	I/O L39P_7	VCCO_7	VCCO_7	GND	GND	GND	GND	VCCO_2	VCCO_2	I/O L39N_2	I/O L39P_2	I/O L40N_2	I/O L40P_2 VREF_2
J	I/O L40P_6 VREF_6	I/O L40N_6	I/O L39P_6	I/O L39N_6	VCCO_6	VCCO_6	GND	GND	GND	GND	VCCO_3	VCCO_3	I/O L39P_3	I/O L39N_3	GND	I/O L40N_3 VREF_3
K	I/O	I/O L24P_6	I/O L24N_6 VREF_6	I/O L23P_6	I/O L23N_6	VCCO_6	GND	GND	GND	GND	VCCO_3	I/O L23N_3	I/O L24P_3	I/O L24N_3	I/O	I/O L40P_3
L	VCCAUX	I/O L22P_6	I/O L22N_6	I/O L21P_6	I/O L21N_6	GND	VCCO_5	VCCO_5	VCCO_4	VCCO_4	GND	I/O L23P_3 VREF_3	I/O L21N_3	I/O L22P_3	I/O L22N_3	VCCAUX
M	I/O L20P_6	I/O L20N_6	I/O L19P_6	I/O L19N_6	VCCINT	I/O L28P_5 D7	I/O L30P_5	VCCO_5	VCCO_4	I/O L29N_4	I/O L27N_4 DIN D0	VCCINT	I/O L21P_3	I/O L19N_3	I/O L20P_3	I/O L20N_3
N	I/O L17P_6 VREF_6	I/O L17N_6	I/O L16P_6	VCCINT	I/O	I/O L28N_5 D6	I/O L30N_5	I/O L32P_5 GCLK2	I/O L31N_4 INIT_B	I/O L29P_4	I/O L27P_4 D1	IO VREF_4	VCCINT	I/O L19P_3	I/O L17P_3 VREF_3	I/O L17N_3
P	I/O L01P_6 VRN_6	I/O L16N_6	M0	M2	I/O L27P_5	I/O L29P_5 VREF_5	I/O	I/O L32N_5 GCLK3	I/O L31P_4 DOUT BUSY	I/O L30N_4 D2	I/O L28N_4	I/O L25N_4	IO VREF_4	I/O L16P_3	I/O L16N_3	I/O L01N_3 VRP_3
R	I/O L01N_6 VRP_6	GND	I/O L01P_5 CS_B	I/O L10P_5 VRN_5	I/O L27N_5 VREF_5	I/O L29N_5	I/O L31P_5 D5	GND	I/O L32N_4 GCLK1	I/O L30P_4 D3	I/O L28P_4	I/O L25P_4	I/O L01N_4 VRP_4	DONE	GND	I/O L01P_3 VRN_3
T	GND	M1	I/O L01N_5 RDWR_B	I/O L10N_5 VRP_5	I/O	VCCAUX	I/O L31N_5 D4	IO VREF_5	I/O L32P_4 GCLK0	IO VREF_4	VCCAUX	I/O	I/O L01P_4 VRN_4	I/O	CCLK	GND

Bank 7 (A–E) · Bank 2 (B–E) · Bank 6 (J–M) · Bank 3 (J–M) · Bank 5 · Bank 4

DS099-4_10_030503

Figure 49: **FT256 Package Footprint (Top View)**

113	**I/O:** Unrestricted, general-purpose user I/O	12	**DUAL:** Configuration pin, then possible user I/O	24	**VREF:** User I/O or input voltage reference for bank
16	**DCI:** User I/O or reference resistor input for bank	8	**GCLK:** User I/O or global clock buffer input	24	**VCCO:** Output voltage supply for bank
7	**CONFIG:** Dedicated configuration pins	4	**JTAG:** Dedicated JTAG port pins	8	**VCCINT:** Internal core voltage supply (+1.2V)
0	**N.C.:** No unconnected pins in this package	32	**GND:** Ground	8	**VCCAUX:** Auxiliary voltage supply (+2.5V)

FG320: 320-lead Fine-pitch Ball Grid Array

The 320-lead fine-pitch ball grid array package, FG320, supports three different Spartan-3 devices, including the XC3S400, the XC3S1000, and the XC3S1500. The footprint for all three devices is identical, as shown in Table 98 and Figure 50.

The FG320 package is an 18 x 18 array of solder balls minus the four center balls.

All the package pins appear in Table 98 and are sorted by bank number, then by pin name. Pairs of pins that form a differential I/O pair appear together in the table. The table also shows the pin number for each pin and the pin type, as defined earlier.

An electronic version of this package pinout table and footprint diagram is available for download from the Xilinx website at http://www.xilinx.com/support/documentation/data_ sheets/s3_pin.zip.

Pinout Table

Table 98: **FG320 Package Pinout**

Bank	XC3S400, XC3S1000, XC3S1500 Pin Name	FG320 Pin Number	Type
0	IO	D9	I/O
0	IO	E7	I/O
0	IO/VREF_0	B3	VREF
0	IO/VREF_0	D6	VREF
0	IO_L01N_0/VRP_0	A2	DCI
0	IO_L01P_0/VRN_0	A3	DCI
0	IO_L09N_0	B4	I/O
0	IO_L09P_0	C4	I/O
0	IO_L10N_0	C5	I/O
0	IO_L10P_0	D5	I/O
0	IO_L15N_0	A4	I/O
0	IO_L15P_0	A5	I/O
0	IO_L25N_0	B5	I/O
0	IO_L25P_0	B6	I/O
0	IO_L27N_0	C7	I/O
0	IO_L27P_0	D7	I/O
0	IO_L28N_0	C8	I/O
0	IO_L28P_0	D8	I/O
0	IO_L29N_0	E8	I/O
0	IO_L29P_0	F8	I/O
0	IO_L30N_0	A7	I/O
0	IO_L30P_0	A8	I/O
0	IO_L31N_0	B9	I/O
0	IO_L31P_0/VREF_0	A9	VREF
0	IO_L32N_0/GCLK7	E9	GCLK
0	IO_L32P_0/GCLK6	F9	GCLK
0	VCCO_0	B8	VCCO
0	VCCO_0	C6	VCCO
0	VCCO_0	G8	VCCO

Table 98: **FG320 Package Pinout *(Cont'd)***

Bank	XC3S400, XC3S1000, XC3S1500 Pin Name	FG320 Pin Number	Type
0	VCCO_0	G9	VCCO
1	IO	A11	I/O
1	IO	B13	I/O
1	IO	D10	I/O
1	IO/VREF_1	A12	VREF
1	IO_L01N_1/VRP_1	A16	DCI
1	IO_L01P_1/VRN_1	A17	DCI
1	IO_L10N_1/VREF_1	A15	VREF
1	IO_L10P_1	B15	I/O
1	IO_L15N_1	C14	I/O
1	IO_L15P_1	C15	I/O
1	IO_L16N_1	A14	I/O
1	IO_L16P_1	B14	I/O
1	IO_L24N_1	D14	I/O
1	IO_L24P_1	D13	I/O
1	IO_L27N_1	E13	I/O
1	IO_L27P_1	E12	I/O
1	IO_L28N_1	C12	I/O
1	IO_L28P_1	D12	I/O
1	IO_L29N_1	F11	I/O
1	IO_L29P_1	E11	I/O
1	IO_L30N_1	C11	I/O
1	IO_L30P_1	D11	I/O
1	IO_L31N_1/VREF_1	A10	VREF
1	IO_L31P_1	B10	I/O
1	IO_L32N_1/GCLK5	E10	GCLK
1	IO_L32P_1/GCLK4	F10	GCLK
1	VCCO_1	B11	VCCO
1	VCCO_1	C13	VCCO
1	VCCO_1	G10	VCCO
1	VCCO_1	G11	VCCO
2	IO	J13	I/O
2	IO_L01N_2/VRP_2	C16	DCI
2	IO_L01P_2/VRN_2	C17	DCI
2	IO_L16N_2	B18	I/O
2	IO_L16P_2	C18	I/O
2	IO_L17N_2	D17	I/O
2	IO_L17P_2/VREF_2	D18	VREF
2	IO_L19N_2	D16	I/O
2	IO_L19P_2	E16	I/O

Table 98: **FG320 Package Pinout *(Cont'd)***

Bank	XC3S400, XC3S1000, XC3S1500 Pin Name	FG320 Pin Number	Type
2	IO_L20N_2	E17	I/O
2	IO_L20P_2	E18	I/O
2	IO_L21N_2	F15	I/O
2	IO_L21P_2	E15	I/O
2	IO_L22N_2	F14	I/O
2	IO_L22P_2	G14	I/O
2	IO_L23N_2/VREF_2	G18	VREF
2	IO_L23P_2	F17	I/O
2	IO_L24N_2	G15	I/O
2	IO_L24P_2	G16	I/O
2	IO_L27N_2	H13	I/O
2	IO_L27P_2	H14	I/O
2	IO_L34N_2/VREF_2	H16	VREF
2	IO_L34P_2	H15	I/O
2	IO_L35N_2	H17	I/O
2	IO_L35P_2	H18	I/O
2	IO_L39N_2	J18	I/O
2	IO_L39P_2	J17	I/O
2	IO_L40N_2	J15	I/O
2	IO_L40P_2/VREF_2	J14	VREF
2	VCCO_2	F16	VCCO
2	VCCO_2	H12	VCCO
2	VCCO_2	J12	VCCO
3	IO	K15	I/O
3	IO_L01N_3/VRP_3	T17	DCI
3	IO_L01P_3/VRN_3	T16	DCI
3	IO_L16N_3	T18	I/O
3	IO_L16P_3	U18	I/O
3	IO_L17N_3	P16	I/O
3	IO_L17P_3/VREF_3	R16	VREF
3	IO_L19N_3	R17	I/O
3	IO_L19P_3	R18	I/O
3	IO_L20N_3	P18	I/O
3	IO_L20P_3	P17	I/O
3	IO_L21N_3	P15	I/O
3	IO_L21P_3	N15	I/O
3	IO_L22N_3	M14	I/O
3	IO_L22P_3	N14	I/O
3	IO_L23N_3	M15	I/O
3	IO_L23P_3/VREF_3	M16	VREF

Table 98: **FG320 Package Pinout *(Cont'd)***

Bank	XC3S400, XC3S1000, XC3S1500 Pin Name	FG320 Pin Number	Type
3	IO_L24N_3	M18	I/O
3	IO_L24P_3	N17	I/O
3	IO_L27N_3	L14	I/O
3	IO_L27P_3	L13	I/O
3	IO_L34N_3	L15	I/O
3	IO_L34P_3/VREF_3	L16	VREF
3	IO_L35N_3	L18	I/O
3	IO_L35P_3	L17	I/O
3	IO_L39N_3	K13	I/O
3	IO_L39P_3	K14	I/O
3	IO_L40N_3/VREF_3	K17	VREF
3	IO_L40P_3	K18	I/O
3	VCCO_3	K12	VCCO
3	VCCO_3	L12	VCCO
3	VCCO_3	N16	VCCO
4	IO	P12	I/O
4	IO	V14	I/O
4	IO/VREF_4	R10	VREF
4	IO/VREF_4	U13	VREF
4	IO/VREF_4	V17	VREF
4	IO_L01N_4/VRP_4	U16	DCI
4	IO_L01P_4/VRN_4	V16	DCI
4	IO_L06N_4/VREF_4	P14	VREF
4	IO_L06P_4	R14	I/O
4	IO_L09N_4	U15	I/O
4	IO_L09P_4	V15	I/O
4	IO_L10N_4	T14	I/O
4	IO_L10P_4	U14	I/O
4	IO_L25N_4	R13	I/O
4	IO_L25P_4	P13	I/O
4	IO_L27N_4/DIN/D0	T12	DUAL
4	IO_L27P_4/D1	R12	DUAL
4	IO_L28N_4	V12	I/O
4	IO_L28P_4	V11	I/O
4	IO_L29N_4	R11	I/O
4	IO_L29P_4	T11	I/O
4	IO_L30N_4/D2	N11	DUAL
4	IO_L30P_4/D3	P11	DUAL
4	IO_L31N_4/INIT_B	U10	DUAL

Table 98: **FG320 Package Pinout *(Cont'd)***

Bank	XC3S400, XC3S1000, XC3S1500 Pin Name	FG320 Pin Number	Type
4	IO_L31P_4/ DOUT/BUSY	V10	DUAL
4	IO_L32N_4/GCLK1	N10	GCLK
4	IO_L32P_4/GCLK0	P10	GCLK
4	VCCO_4	M10	VCCO
4	VCCO_4	M11	VCCO
4	VCCO_4	T13	VCCO
4	VCCO_4	U11	VCCO
5	IO	N8	I/O
5	IO	P8	I/O
5	IO	U6	I/O
5	IO/VREF_5	R9	VREF
5	IO_L01N_5/RDWR_B	V3	DUAL
5	IO_L01P_5/CS_B	V2	DUAL
5	IO_L06N_5	T5	I/O
5	IO_L06P_5	T4	I/O
5	IO_L10N_5/VRP_5	V4	DCI
5	IO_L10P_5/VRN_5	U4	DCI
5	IO_L15N_5	R6	I/O
5	IO_L15P_5	R5	I/O
5	IO_L16N_5	V5	I/O
5	IO_L16P_5	U5	I/O
5	IO_L27N_5/VREF_5	P6	VREF
5	IO_L27P_5	P7	I/O
5	IO_L28N_5/D6	R7	DUAL
5	IO_L28P_5/D7	T7	DUAL
5	IO_L29N_5	V8	I/O
5	IO_L29P_5/VREF_5	V7	VREF
5	IO_L30N_5	R8	I/O
5	IO_L30P_5	T8	I/O
5	IO_L31N_5/D4	U9	DUAL
5	IO_L31P_5/D5	V9	DUAL
5	IO_L32N_5/GCLK3	N9	GCLK
5	IO_L32P_5/GCLK2	P9	GCLK
5	VCCO_5	M8	VCCO
5	VCCO_5	M9	VCCO
5	VCCO_5	T6	VCCO
5	VCCO_5	U8	VCCO
6	IO	K6	I/O
6	IO_L01N_6/VRP_6	T3	DCI

Table 98: **FG320 Package Pinout *(Cont'd)***

Bank	XC3S400, XC3S1000, XC3S1500 Pin Name	FG320 Pin Number	Type
6	IO_L01P_6/VRN_6	T2	DCI
6	IO_L16N_6	U1	I/O
6	IO_L16P_6	T1	I/O
6	IO_L17N_6	R2	I/O
6	IO_L17P_6/VREF_6	R1	VREF
6	IO_L19N_6	R3	I/O
6	IO_L19P_6	P3	I/O
6	IO_L20N_6	P2	I/O
6	IO_L20P_6	P1	I/O
6	IO_L21N_6	N4	I/O
6	IO_L21P_6	P4	I/O
6	IO_L22N_6	N5	I/O
6	IO_L22P_6	M5	I/O
6	IO_L23N_6	M3	I/O
6	IO_L23P_6	M4	I/O
6	IO_L24N_6/VREF_6	N2	VREF
6	IO_L24P_6	M1	I/O
6	IO_L27N_6	L6	I/O
6	IO_L27P_6	L5	I/O
6	IO_L34N_6/VREF_6	L3	VREF
6	IO_L34P_6	L4	I/O
6	IO_L35N_6	L2	I/O
6	IO_L35P_6	L1	I/O
6	IO_L39N_6	K5	I/O
6	IO_L39P_6	K4	I/O
6	IO_L40N_6	K1	I/O
6	IO_L40P_6/VREF_6	K2	VREF
6	VCCO_6	K7	VCCO
6	VCCO_6	L7	VCCO
6	VCCO_6	N3	VCCO
7	IO	J6	I/O
7	IO_L01N_7/VRP_7	C3	DCI
7	IO_L01P_7/VRN_7	C2	DCI
7	IO_L16N_7	C1	I/O
7	IO_L16P_7/VREF_7	B1	VREF
7	IO_L17N_7	D1	I/O
7	IO_L17P_7	D2	I/O
7	IO_L19N_7/VREF_7	E3	VREF
7	IO_L19P_7	D3	I/O
7	IO_L20N_7	E2	I/O

Table 98: **FG320 Package Pinout *(Cont'd)***

Bank	XC3S400, XC3S1000, XC3S1500 Pin Name	FG320 Pin Number	Type
7	IO_L20P_7	E1	I/O
7	IO_L21N_7	E4	I/O
7	IO_L21P_7	F4	I/O
7	IO_L22N_7	G5	I/O
7	IO_L22P_7	F5	I/O
7	IO_L23N_7	G1	I/O
7	IO_L23P_7	F2	I/O
7	IO_L24N_7	G4	I/O
7	IO_L24P_7	G3	I/O
7	IO_L27N_7	H5	I/O
7	IO_L27P_7/VREF_7	H6	VREF
7	IO_L34N_7	H4	I/O
7	IO_L34P_7	H3	I/O
7	IO_L35N_7	H1	I/O
7	IO_L35P_7	H2	I/O
7	IO_L39N_7	J1	I/O
7	IO_L39P_7	J2	I/O
7	IO_L40N_7/VREF_7	J5	VREF
7	IO_L40P_7	J4	I/O
7	VCCO_7	F3	VCCO
7	VCCO_7	H7	VCCO
7	VCCO_7	J7	VCCO
N/A	GND	A1	GND
N/A	GND	A13	GND
N/A	GND	A18	GND
N/A	GND	A6	GND
N/A	GND	B17	GND
N/A	GND	B2	GND
N/A	GND	C10	GND
N/A	GND	C9	GND
N/A	GND	F1	GND
N/A	GND	F18	GND
N/A	GND	G12	GND
N/A	GND	G7	GND
N/A	GND	H10	GND
N/A	GND	H11	GND
N/A	GND	H8	GND
N/A	GND	H9	GND
N/A	GND	J11	GND
N/A	GND	J16	GND

Table 98: **FG320 Package Pinout *(Cont'd)***

Bank	XC3S400, XC3S1000, XC3S1500 Pin Name	FG320 Pin Number	Type
N/A	GND	J3	GND
N/A	GND	J8	GND
N/A	GND	K11	GND
N/A	GND	K16	GND
N/A	GND	K3	GND
N/A	GND	K8	GND
N/A	GND	L10	GND
N/A	GND	L11	GND
N/A	GND	L8	GND
N/A	GND	L9	GND
N/A	GND	M12	GND
N/A	GND	M7	GND
N/A	GND	N1	GND
N/A	GND	N18	GND
N/A	GND	T10	GND
N/A	GND	T9	GND
N/A	GND	U17	GND
N/A	GND	U2	GND
N/A	GND	V1	GND
N/A	GND	V13	GND
N/A	GND	V18	GND
N/A	GND	V6	GND
N/A	VCCAUX	B12	VCCAUX
N/A	VCCAUX	B7	VCCAUX
N/A	VCCAUX	G17	VCCAUX
N/A	VCCAUX	G2	VCCAUX
N/A	VCCAUX	M17	VCCAUX
N/A	VCCAUX	M2	VCCAUX
N/A	VCCAUX	U12	VCCAUX
N/A	VCCAUX	U7	VCCAUX
N/A	VCCINT	F12	VCCINT
N/A	VCCINT	F13	VCCINT
N/A	VCCINT	F6	VCCINT
N/A	VCCINT	F7	VCCINT
N/A	VCCINT	G13	VCCINT
N/A	VCCINT	G6	VCCINT
N/A	VCCINT	M13	VCCINT
N/A	VCCINT	M6	VCCINT
N/A	VCCINT	N12	VCCINT
N/A	VCCINT	N13	VCCINT

Table 98: **FG320 Package Pinout *(Cont'd)***

Bank	XC3S400, XC3S1000, XC3S1500 Pin Name	FG320 Pin Number	Type
N/A	VCCINT	N6	VCCINT
N/A	VCCINT	N7	VCCINT
VCCAUX	CCLK	T15	CONFIG
VCCAUX	DONE	R15	CONFIG
VCCAUX	HSWAP_EN	E6	CONFIG
VCCAUX	M0	P5	CONFIG
VCCAUX	M1	U3	CONFIG
VCCAUX	M2	R4	CONFIG
VCCAUX	PROG_B	E5	CONFIG
VCCAUX	TCK	E14	JTAG
VCCAUX	TDI	D4	JTAG
VCCAUX	TDO	D15	JTAG
VCCAUX	TMS	B16	JTAG

User I/Os by Bank

Table 99 indicates how the available user-I/O pins are distributed between the eight I/O banks on the FG320 package.

Table 99: **User I/Os Per Bank in FG320 Package**

Package Edge	I/O Bank	Maximum I/O	Maximum LVDS Pairs	All Possible I/O Pins by Type				
				I/O	DUAL	DCI	VREF	GCLK
Top	0	26	11	19	0	2	3	2
	1	26	11	19	0	2	3	2
Right	2	29	14	23	0	2	4	0
	3	29	14	23	0	2	4	0
Bottom	4	27	11	13	6	2	4	2
	5	26	11	13	6	2	3	2
Left	6	29	14	23	0	2	4	0
	7	29	14	23	0	2	4	0

FG320 Footprint

		Bank 0									Bank 1								
		1	2	3	4	5	6	7	8	9	10	11	12	13	14	15	16	17	18
	A	GND	I/O L01N_0 VRP_0	I/O L01P_0 VRN_0	I/O L15N_0	I/O L15P_0	GND	I/O L30N_0	I/O L30P_0	I/O L31P_0 VREF_0	I/O L31N_1 VREF_1	I/O	I/O VREF_1	GND	I/O L16N_1	I/O L10N_1 VREF_1	I/O L01N_1 VRP_1	I/O L01P_1 VRN_1	GND
	B	I/O L16P_7 VREF_7	GND	I/O VREF_0	I/O L09N_0	I/O L25N_0	I/O L25P_0	VCCAUX	VCCO_0	I/O L31N_0	I/O L31P_1	VCCO_1	VCCAUX	I/O	I/O L16P_1	I/O L10P_1	TMS	GND	I/O L16N_2
	C	I/O L16N_7	I/O L01P_7 VRN_7	I/O L01N_7 VRP_7	I/O L09P_0	I/O L10N_0	VCCO_0	I/O L27N_0	I/O L28N_0	GND	GND	I/O L30N_1	I/O L28N_1	VCCO_1	I/O L15N_1	I/O L15P_1	I/O L01N_2 VRP_2	I/O L01P_2 VRN_2	I/O L16P_2
	D	I/O L17N_7	I/O L17P_7	I/O L19P_7	TDI	I/O L10P_0	I/O VREF_0	I/O L27P_0	I/O L28P_0	I/O	I/O	I/O L30P_1	I/O L28P_1	I/O L24P_1	I/O L24N_1	TDO	I/O L19N_2	I/O L17N_2	I/O L17P_2 VREF_2
Bank 7	E	I/O L20P_7	I/O L20N_7	I/O L19N_7 VREF_7	I/O L21N_7	PROG_B	HSWAP_ EN	I/O	I/O L29N_0	I/O L32N_0 GCLK7	I/O L32N_1 GCLK5	I/O L29P_1	I/O L27P_1	I/O L27N_1	TCK	I/O L21P_2	I/O L19P_2	I/O L20N_2	I/O L20P_2
	F	GND	I/O L23P_7	VCCO_7	I/O L21P_7	I/O L22P_7	VCCINT	VCCINT	I/O L29P_0	I/O L32P_0 GCLK6	I/O L32P_1 GCLK4	I/O L29N_1	VCCINT	VCCINT	I/O L22N_2	I/O L21N_2	VCCO_2	I/O L23P_2	GND
	G	I/O L23N_7	VCCAUX	I/O L24P_7	I/O L24N_7	I/O L22N_7	VCCINT	GND	VCCO_0	VCCO_0	VCCO_1	VCCO_1	GND	VCCINT	I/O L22P_2	I/O L24N_2	I/O L24P_2	VCCAUX	I/O L23N_2 VREF_2
	H	I/O L35N_7	I/O L35P_7	I/O L34P_7	I/O L34N_7	I/O L27N_7	I/O L27P_7 VREF_7	VCCO_7	GND	GND	GND	GND	VCCO_2	I/O L27N_2	I/O L27P_2	I/O L34P_2	I/O L34N_2 VREF_2	I/O L35N_2	I/O L35P_2
	J	I/O L39N_7	I/O L39P_7	GND	I/O L40P_7	I/O L40N_7 VREF_7	I/O	VCCO_7	GND			GND	VCCO_2	I/O	I/O L40P_2 VREF_2	I/O L40N_2	GND	I/O L39P_2	I/O L39N_2
	K	I/O L40N_6	I/O L40P_6 VREF_6	GND	I/O L39P_6	I/O L39N_6	I/O	VCCO_6	GND			GND	VCCO_3	I/O L39N_3	I/O L39P_3	I/O	GND	I/O L40N_3 VREF_3	I/O L40P_3
	L	I/O L35P_6	I/O L35N_6	I/O L34N_6 VREF_6	I/O L34P_6	I/O L27P_6	I/O L27N_6	VCCO_6	GND	GND	GND	GND	VCCO_3	I/O L27P_3	I/O L27N_3	I/O L34N_3	I/O L34P_3 VREF_3	I/O L35P_3	I/O L35N_3
	M	I/O L24P_6	VCCAUX	I/O L23N_6	I/O L23P_6	I/O L22P_6	VCCINT	GND	VCCO_5	VCCO_5	VCCO_4	VCCO_4	GND	VCCINT	I/O L22N_3	I/O L23N_3	I/O L23P_3 VREF_3	VCCAUX	I/O L24N_3
Bank 6	N	GND	I/O L24N_6 VREF_6	VCCO_6	I/O L21N_6	I/O L22N_6	VCCINT	VCCINT	I/O	I/O L32N_5 GCLK3	I/O L32N_4 GCLK1	I/O L30N_4 D2	VCCINT	VCCINT	I/O L22P_3	I/O L21P_3	VCCO_3	I/O L24P_3	GND
	P	I/O L20P_6	I/O L20N_6	I/O L19P_6	I/O L21P_6	M0	I/O L27N_5 VREF_5	I/O L27P_5	I/O	I/O L32P_5 GCLK2	I/O L32P_4 GCLK0	I/O L30P_4 D3	I/O	I/O L25P_4	I/O L06N_4 VREF_4	I/O L21N_3	I/O L17N_3	I/O L20P_3	I/O L20N_3
	R	I/O L17P_6 VREF_6	I/O L17N_6	I/O L19N_6	M2	I/O L15P_5	I/O L15N_5	I/O L28N_5 D6	I/O L30N_5	I/O VREF_5	I/O VREF_4	I/O L29N_4	I/O L27P_4 D1	I/O L25N_4	I/O L06P_4	DONE	I/O L17P_3 VREF_3	I/O L19N_3	I/O L19P_3
	T	I/O L16P_6	I/O L01P_6 VRN_6	I/O L01N_6 VRP_6	I/O L06P_5	I/O L06N_5	VCCO_5	I/O L28P_5 D7	I/O L30P_5	GND	GND	I/O L29P_4	I/O L27N_4 DIN D0	VCCO_4	I/O L10N_4	CCLK	I/O L01P_3 VRN_3	I/O L01N_3 VRP_3	I/O L16N_3
	U	I/O L16N_6	GND	M1	I/O L10P_5 VRN_5	I/O L16P_5	I/O	VCCAUX	VCCO_5	I/O L31N_5 D4	I/O L31N_4 INIT_B	VCCO_4	VCCAUX	I/O VREF_4	I/O L10P_4	I/O L09N_4	I/O L01N_4 VRP_4	GND	I/O L16P_3
	V	GND	I/O L01P_5 CS_B	I/O L01N_5 RDWR_B	I/O L10N_5 VRP_5	I/O L16N_5	GND	I/O L29P_5 VREF_5	I/O L29N_5	I/O L31P_5 D5	I/O L31P_4 DOUT BUSY	I/O L28P_4	I/O L28N_4	GND	I/O	I/O L09P_4	I/O L01P_4 VRN_4	I/O VREF_4	GND
		Bank 5									Bank 4								

Bank 2

Bank 3

ds099-3_16_121103

Figure 50: **FG320 Package Footprint (Top View)**

156	**I/O:** Unrestricted, general-purpose user I/O	12	**DUAL:** Configuration pin, then possible user I/O	29	**VREF:** User I/O or input voltage reference for bank
16	**DCI:** User I/O or reference resistor input for bank	8	**GCLK:** User I/O or global clock buffer input	28	**VCCO:** Output voltage supply for bank
7	**CONFIG:** Dedicated configuration pins	4	**JTAG:** Dedicated JTAG port pins	12	**VCCINT:** Internal core voltage supply (+1.2V)
0	**N.C.:** No unconnected pins in this package	40	**GND:** Ground	8	**VCCAUX:** Auxiliary voltage supply (+2.5V)

FG456: 456-lead Fine-pitch Ball Grid Array

The 456-lead fine-pitch ball grid array package, FG456, supports four different Spartan-3 devices, including the XC3S400, the XC3S1000, the XC3S1500, and the XC3S2000. The footprints for the XC3S1000, the XC3S1500, and the XC3S2000 are identical, as shown in Table 100 and Figure 51. The XC3S400, however, has fewer I/O pins which consequently results in 69 unconnected pins on the FG456 package, labeled as "N.C." In Table 100 and Figure 51, these unconnected pins are indicated with a black diamond symbol (◆).

All the package pins appear in Table 100 and are sorted by bank number, then by pin name. Pairs of pins that form a differential I/O pair appear together in the table. The table also shows the pin number for each pin and the pin type, as defined earlier.

If there is a difference between the XC3S400 pinout and the pinout for the XC3S1000, the XC3S1500, or the XC3S2000, then that difference is highlighted in Table 100. If the table entry is shaded grey, then there is an unconnected pin on the XC3S400 that maps to a user-I/O pin on the XC3S1000, XC3S1500, and XC3S2000. If the table entry is shaded tan, then the unconnected pin on the XC3S400 maps to a VREF-type pin on the XC3S1000, the XC3S1500, or the XC3S2000. If the other VREF pins in the bank all connect to a voltage reference to support a special I/O standard, then also connect the N.C. pin on the XC3S400 to the same VREF voltage. This provides maximum flexibility as you could potentially migrate a design from the XC3S400 device to an XC3S1000, an XC3S1500, or an XC3S2000 FPGA without changing the printed circuit board.

An electronic version of this package pinout table and footprint diagram is available for download from the Xilinx website at http://www.xilinx.com/support/documentation/data_ sheets/s3_pin.zip.

Pinout Table

Table 100: **FG456 Package Pinout**

Bank	3S400 Pin Name	3S1000, 3S1500, 3S2000 Pin Name	FG456 Pin Number	Type
0	IO	IO	A10	I/O
0	IO	IO	D9	I/O
0	IO	IO	D10	I/O
0	IO	IO	F6	I/O
0	IO/VREF_0	IO/VREF_0	A3	VREF
0	IO/VREF_0	IO/VREF_0	C7	VREF
0	N.C. (◆)	IO/VREF_0	E5	VREF
0	IO/VREF_0	IO/VREF_0	F7	VREF
0	IO_L01N_0/VRP_0	IO_L01N_0/VRP_0	B4	DCI
0	IO_L01P_0/VRN_0	IO_L01P_0/VRN_0	A4	DCI
0	IO_L06N_0	IO_L06N_0	D5	I/O
0	IO_L06P_0	IO_L06P_0	C5	I/O
0	IO_L09N_0	IO_L09N_0	B5	I/O
0	IO_L09P_0	IO_L09P_0	A5	I/O
0	IO_L10N_0	IO_L10N_0	E6	I/O
0	IO_L10P_0	IO_L10P_0	D6	I/O
0	IO_L15N_0	IO_L15N_0	C6	I/O
0	IO_L15P_0	IO_L15P_0	B6	I/O
0	IO_L16N_0	IO_L16N_0	E7	I/O
0	IO_L16P_0	IO_L16P_0	D7	I/O
0	N.C. (◆)	IO_L19N_0	B7	I/O
0	N.C. (◆)	IO_L19P_0	A7	I/O

Table 100: **FG456 Package Pinout *(Cont'd)***

Bank	3S400 Pin Name	3S1000, 3S1500, 3S2000 Pin Name	FG456 Pin Number	Type
0	N.C. (◆)	IO_L22N_0	E8	I/O
0	N.C. (◆)	IO_L22P_0	D8	I/O
0	IO_L24N_0	IO_L24N_0	B8	I/O
0	IO_L24P_0	IO_L24P_0	A8	I/O
0	IO_L25N_0	IO_L25N_0	F9	I/O
0	IO_L25P_0	IO_L25P_0	E9	I/O
0	IO_L27N_0	IO_L27N_0	B9	I/O
0	IO_L27P_0	IO_L27P_0	A9	I/O
0	IO_L28N_0	IO_L28N_0	F10	I/O
0	IO_L28P_0	IO_L28P_0	E10	I/O
0	IO_L29N_0	IO_L29N_0	C10	I/O
0	IO_L29P_0	IO_L29P_0	B10	I/O
0	IO_L30N_0	IO_L30N_0	F11	I/O
0	IO_L30P_0	IO_L30P_0	E11	I/O
0	IO_L31N_0	IO_L31N_0	D11	I/O
0	IO_L31P_0/VREF_0	IO_L31P_0/VREF_0	C11	VREF
0	IO_L32N_0/GCLK7	IO_L32N_0/GCLK7	B11	GCLK
0	IO_L32P_0/GCLK6	IO_L32P_0/GCLK6	A11	GCLK
0	VCCO_0	VCCO_0	C8	VCCO
0	VCCO_0	VCCO_0	F8	VCCO
0	VCCO_0	VCCO_0	G9	VCCO
0	VCCO_0	VCCO_0	G10	VCCO
0	VCCO_0	VCCO_0	G11	VCCO
1	IO	IO	A12	I/O
1	IO	IO	E16	I/O
1	IO	IO	F12	I/O
1	IO	IO	F13	I/O
1	IO	IO	F16	I/O
1	IO	IO	F17	I/O
1	IO/VREF_1	IO/VREF_1	E13	VREF
1	N.C. (◆)	IO/VREF_1	F14	VREF
1	IO_L01N_1/VRP_1	IO_L01N_1/VRP_1	C19	DCI
1	IO_L01P_1/VRN_1	IO_L01P_1/VRN_1	B20	DCI
1	IO_L06N_1/VREF_1	IO_L06N_1/VREF_1	A19	VREF
1	IO_L06P_1	IO_L06P_1	B19	I/O
1	IO_L09N_1	IO_L09N_1	C18	I/O
1	IO_L09P_1	IO_L09P_1	D18	I/O
1	IO_L10N_1/VREF_1	IO_L10N_1/VREF_1	A18	VREF
1	IO_L10P_1	IO_L10P_1	B18	I/O
1	IO_L15N_1	IO_L15N_1	D17	I/O

Table 100: **FG456 Package Pinout *(Cont'd)***

Bank	3S400 Pin Name	3S1000, 3S1500, 3S2000 Pin Name	FG456 Pin Number	Type
1	IO_L15P_1	IO_L15P_1	E17	I/O
1	IO_L16N_1	IO_L16N_1	B17	I/O
1	IO_L16P_1	IO_L16P_1	C17	I/O
1	N.C. (◆)	IO_L19N_1	C16	I/O
1	N.C. (◆)	IO_L19P_1	D16	I/O
1	N.C. (◆)	IO_L22N_1	A16	I/O
1	N.C. (◆)	IO_L22P_1	B16	I/O
1	IO_L24N_1	IO_L24N_1	D15	I/O
1	IO_L24P_1	IO_L24P_1	E15	I/O
1	IO_L25N_1	IO_L25N_1	B15	I/O
1	IO_L25P_1	IO_L25P_1	A15	I/O
1	IO_L27N_1	IO_L27N_1	D14	I/O
1	IO_L27P_1	IO_L27P_1	E14	I/O
1	IO_L28N_1	IO_L28N_1	A14	I/O
1	IO_L28P_1	IO_L28P_1	B14	I/O
1	IO_L29N_1	IO_L29N_1	C13	I/O
1	IO_L29P_1	IO_L29P_1	D13	I/O
1	IO_L30N_1	IO_L30N_1	A13	I/O
1	IO_L30P_1	IO_L30P_1	B13	I/O
1	IO_L31N_1/VREF_1	IO_L31N_1/VREF_1	D12	VREF
1	IO_L31P_1	IO_L31P_1	E12	I/O
1	IO_L32N_1/GCLK5	IO_L32N_1/GCLK5	B12	GCLK
1	IO_L32P_1/GCLK4	IO_L32P_1/GCLK4	C12	GCLK
1	VCCO_1	VCCO_1	C15	VCCO
1	VCCO_1	VCCO_1	F15	VCCO
1	VCCO_1	VCCO_1	G12	VCCO
1	VCCO_1	VCCO_1	G13	VCCO
1	VCCO_1	VCCO_1	G14	VCCO
2	IO	IO	C22	I/O
2	IO_L01N_2/VRP_2	IO_L01N_2/VRP_2	C20	DCI
2	IO_L01P_2/VRN_2	IO_L01P_2/VRN_2	C21	DCI
2	IO_L16N_2	IO_L16N_2	D20	I/O
2	IO_L16P_2	IO_L16P_2	D19	I/O
2	IO_L17N_2	IO_L17N_2	D21	I/O
2	IO_L17P_2/VREF_2	IO_L17P_2/VREF_2	D22	VREF
2	IO_L19N_2	IO_L19N_2	E18	I/O
2	IO_L19P_2	IO_L19P_2	F18	I/O
2	IO_L20N_2	IO_L20N_2	E19	I/O
2	IO_L20P_2	IO_L20P_2	E20	I/O
2	IO_L21N_2	IO_L21N_2	E21	I/O

Table 100: **FG456 Package Pinout *(Cont'd)***

Bank	3S400 Pin Name	3S1000, 3S1500, 3S2000 Pin Name	FG456 Pin Number	Type
2	IO_L21P_2	IO_L21P_2	E22	I/O
2	IO_L22N_2	IO_L22N_2	G17	I/O
2	IO_L22P_2	IO_L22P_2	G18	I/O
2	IO_L23N_2/VREF_2	IO_L23N_2/VREF_2	F19	VREF
2	IO_L23P_2	IO_L23P_2	G19	I/O
2	IO_L24N_2	IO_L24N_2	F20	I/O
2	IO_L24P_2	IO_L24P_2	F21	I/O
2	N.C. (◆)	IO_L26N_2	G20	I/O
2	N.C. (◆)	IO_L26P_2	H19	I/O
2	IO_L27N_2	IO_L27N_2	G21	I/O
2	IO_L27P_2	IO_L27P_2	G22	I/O
2	N.C. (◆)	IO_L28N_2	H18	I/O
2	N.C. (◆)	IO_L28P_2	J17	I/O
2	N.C. (◆)	IO_L29N_2	H21	I/O
2	N.C. (◆)	IO_L29P_2	H22	I/O
2	N.C. (◆)	IO_L31N_2	J18	I/O
2	N.C. (◆)	IO_L31P_2	J19	I/O
2	N.C. (◆)	IO_L32N_2	J21	I/O
2	N.C. (◆)	IO_L32P_2	J22	I/O
2	N.C. (◆)	IO_L33N_2	K17	I/O
2	N.C. (◆)	IO_L33P_2	K18	I/O
2	IO_L34N_2/VREF_2	IO_L34N_2/VREF_2	K19	VREF
2	IO_L34P_2	IO_L34P_2	K20	I/O
2	IO_L35N_2	IO_L35N_2	K21	I/O
2	IO_L35P_2	IO_L35P_2	K22	I/O
2	IO_L38N_2	IO_L38N_2	L17	I/O
2	IO_L38P_2	IO_L38P_2	L18	I/O
2	IO_L39N_2	IO_L39N_2	L19	I/O
2	IO_L39P_2	IO_L39P_2	L20	I/O
2	IO_L40N_2	IO_L40N_2	L21	I/O
2	IO_L40P_2/VREF_2	IO_L40P_2/VREF_2	L22	VREF
2	VCCO_2	VCCO_2	H17	VCCO
2	VCCO_2	VCCO_2	H20	VCCO
2	VCCO_2	VCCO_2	J16	VCCO
2	VCCO_2	VCCO_2	K16	VCCO
2	VCCO_2	VCCO_2	L16	VCCO
3	IO	IO	Y21	I/O
3	IO_L01N_3/VRP_3	IO_L01N_3/VRP_3	Y20	DCI
3	IO_L01P_3/VRN_3	IO_L01P_3/VRN_3	Y19	DCI
3	IO_L16N_3	IO_L16N_3	W22	I/O

Table 100: **FG456 Package Pinout *(Cont'd)***

Bank	3S400 Pin Name	3S1000, 3S1500, 3S2000 Pin Name	FG456 Pin Number	Type
3	IO_L16P_3	IO_L16P_3	Y22	I/O
3	IO_L17N_3	IO_L17N_3	V19	I/O
3	IO_L17P_3/VREF_3	IO_L17P_3/VREF_3	W19	VREF
3	IO_L19N_3	IO_L19N_3	W21	I/O
3	IO_L19P_3	IO_L19P_3	W20	I/O
3	IO_L20N_3	IO_L20N_3	U19	I/O
3	IO_L20P_3	IO_L20P_3	V20	I/O
3	IO_L21N_3	IO_L21N_3	V22	I/O
3	IO_L21P_3	IO_L21P_3	V21	I/O
3	IO_L22N_3	IO_L22N_3	T17	I/O
3	IO_L22P_3	IO_L22P_3	U18	I/O
3	IO_L23N_3	IO_L23N_3	U21	I/O
3	IO_L23P_3/VREF_3	IO_L23P_3/VREF_3	U20	VREF
3	IO_L24N_3	IO_L24N_3	R18	I/O
3	IO_L24P_3	IO_L24P_3	T18	I/O
3	N.C. (◆)	IO_L26N_3	T20	I/O
3	N.C. (◆)	IO_L26P_3	T19	I/O
3	IO_L27N_3	IO_L27N_3	T22	I/O
3	IO_L27P_3	IO_L27P_3	T21	I/O
3	N.C. (◆)	IO_L28N_3	R22	I/O
3	N.C. (◆)	IO_L28P_3	R21	I/O
3	N.C. (◆)	IO_L29N_3	P19	I/O
3	N.C. (◆)	IO_L29P_3	R19	I/O
3	N.C. (◆)	IO_L31N_3	P18	I/O
3	N.C. (◆)	IO_L31P_3	P17	I/O
3	N.C. (◆)	IO_L32N_3	P22	I/O
3	N.C. (◆)	IO_L32P_3	P21	I/O
3	N.C. (◆)	IO_L33N_3	N18	I/O
3	N.C. (◆)	IO_L33P_3	N17	I/O
3	IO_L34N_3	IO_L34N_3	N20	I/O
3	IO_L34P_3/VREF_3	IO_L34P_3/VREF_3	N19	VREF
3	IO_L35N_3	IO_L35N_3	N22	I/O
3	IO_L35P_3	IO_L35P_3	N21	I/O
3	IO_L38N_3	IO_L38N_3	M18	I/O
3	IO_L38P_3	IO_L38P_3	M17	I/O
3	IO_L39N_3	IO_L39N_3	M20	I/O
3	IO_L39P_3	IO_L39P_3	M19	I/O
3	IO_L40N_3/VREF_3	IO_L40N_3/VREF_3	M22	VREF
3	IO_L40P_3	IO_L40P_3	M21	I/O
3	VCCO_3	VCCO_3	M16	VCCO

Table 100: **FG456 Package Pinout *(Cont'd)***

Bank	3S400 Pin Name	3S1000, 3S1500, 3S2000 Pin Name	FG456 Pin Number	Type
3	VCCO_3	VCCO_3	N16	VCCO
3	VCCO_3	VCCO_3	P16	VCCO
3	VCCO_3	VCCO_3	R17	VCCO
3	VCCO_3	VCCO_3	R20	VCCO
4	IO	IO	U16	I/O
4	IO	IO	U17	I/O
4	IO	IO	W13	I/O
4	IO	IO	W14	I/O
4	IO/VREF_4	IO/VREF_4	AB13	VREF
4	IO/VREF_4	IO/VREF_4	V18	VREF
4	IO/VREF_4	IO/VREF_4	Y16	VREF
4	IO_L01N_4/VRP_4	IO_L01N_4/VRP_4	AA20	DCI
4	IO_L01P_4/VRN_4	IO_L01P_4/VRN_4	AB20	DCI
4	N.C. (◆)	IO_L05N_4	AA19	I/O
4	N.C. (◆)	IO_L05P_4	AB19	I/O
4	IO_L06N_4/VREF_4	IO_L06N_4/VREF_4	W18	VREF
4	IO_L06P_4	IO_L06P_4	Y18	I/O
4	IO_L09N_4	IO_L09N_4	AA18	I/O
4	IO_L09P_4	IO_L09P_4	AB18	I/O
4	IO_L10N_4	IO_L10N_4	V17	I/O
4	IO_L10P_4	IO_L10P_4	W17	I/O
4	IO_L15N_4	IO_L15N_4	Y17	I/O
4	IO_L15P_4	IO_L15P_4	AA17	I/O
4	IO_L16N_4	IO_L16N_4	V16	I/O
4	IO_L16P_4	IO_L16P_4	W16	I/O
4	N.C. (◆)	IO_L19N_4	AA16	I/O
4	N.C. (◆)	IO_L19P_4	AB16	I/O
4	N.C. (◆)	IO_L22N_4/ VREF_4	V15	VREF
4	N.C. (◆)	IO_L22P_4	W15	I/O
4	IO_L24N_4	IO_L24N_4	AA15	I/O
4	IO_L24P_4	IO_L24P_4	AB15	I/O
4	IO_L25N_4	IO_L25N_4	U14	I/O
4	IO_L25P_4	IO_L25P_4	V14	I/O
4	IO_L27N_4/DIN/D0	IO_L27N_4/DIN/D0	AA14	DUAL
4	IO_L27P_4/D1	IO_L27P_4/D1	AB14	DUAL
4	IO_L28N_4	IO_L28N_4	U13	I/O
4	IO_L28P_4	IO_L28P_4	V13	I/O
4	IO_L29N_4	IO_L29N_4	Y13	I/O
4	IO_L29P_4	IO_L29P_4	AA13	I/O

Table 100: **FG456 Package Pinout *(Cont'd)***

Bank	3S400 Pin Name	3S1000, 3S1500, 3S2000 Pin Name	FG456 Pin Number	Type
4	IO_L30N_4/D2	IO_L30N_4/D2	U12	DUAL
4	IO_L30P_4/D3	IO_L30P_4/D3	V12	DUAL
4	IO_L31N_4/INIT_B	IO_L31N_4/INIT_B	W12	DUAL
4	IO_L31P_4/DOUT/BUSY	IO_L31P_4/DOUT/BUSY	Y12	DUAL
4	IO_L32N_4/GCLK1	IO_L32N_4/GCLK1	AA12	GCLK
4	IO_L32P_4/GCLK0	IO_L32P_4/GCLK0	AB12	GCLK
4	VCCO_4	VCCO_4	T12	VCCO
4	VCCO_4	VCCO_4	T13	VCCO
4	VCCO_4	VCCO_4	T14	VCCO
4	VCCO_4	VCCO_4	U15	VCCO
4	VCCO_4	VCCO_4	Y15	VCCO
5	IO	IO	U7	I/O
5	N.C. (◆)	IO	U9	I/O
5	IO	IO	U10	I/O
5	IO	IO	U11	I/O
5	IO	IO	V7	I/O
5	IO	IO	V10	I/O
5	IO/VREF_5	IO/VREF_5	AB11	VREF
5	IO/VREF_5	IO/VREF_5	U6	VREF
5	IO_L01N_5/RDWR_B	IO_L01N_5/RDWR_B	Y4	DUAL
5	IO_L01P_5/CS_B	IO_L01P_5/CS_B	AA3	DUAL
5	IO_L06N_5	IO_L06N_5	AB4	I/O
5	IO_L06P_5	IO_L06P_5	AA4	I/O
5	IO_L09N_5	IO_L09N_5	Y5	I/O
5	IO_L09P_5	IO_L09P_5	W5	I/O
5	IO_L10N_5/VRP_5	IO_L10N_5/VRP_5	AB5	DCI
5	IO_L10P_5/VRN_5	IO_L10P_5/VRN_5	AA5	DCI
5	IO_L15N_5	IO_L15N_5	W6	I/O
5	IO_L15P_5	IO_L15P_5	V6	I/O
5	IO_L16N_5	IO_L16N_5	AA6	I/O
5	IO_L16P_5	IO_L16P_5	Y6	I/O
5	N.C. (◆)	IO_L19N_5	Y7	I/O
5	N.C. (◆)	IO_L19P_5/ VREF_5	W7	VREF
5	N.C. (◆)	IO_L22N_5	AB7	I/O
5	N.C. (◆)	IO_L22P_5	AA7	I/O
5	IO_L24N_5	IO_L24N_5	W8	I/O
5	IO_L24P_5	IO_L24P_5	V8	I/O
5	IO_L25N_5	IO_L25N_5	AB8	I/O
5	IO_L25P_5	IO_L25P_5	AA8	I/O

Table 100: **FG456 Package Pinout *(Cont'd)***

Bank	3S400 Pin Name	3S1000, 3S1500, 3S2000 Pin Name	FG456 Pin Number	Type
5	IO_L27N_5/VREF_5	IO_L27N_5/VREF_5	W9	VREF
5	IO_L27P_5	IO_L27P_5	V9	I/O
5	IO_L28N_5/D6	IO_L28N_5/D6	AB9	DUAL
5	IO_L28P_5/D7	IO_L28P_5/D7	AA9	DUAL
5	IO_L29N_5	IO_L29N_5	Y10	I/O
5	IO_L29P_5/VREF_5	IO_L29P_5/VREF_5	W10	VREF
5	IO_L30N_5	IO_L30N_5	AB10	I/O
5	IO_L30P_5	IO_L30P_5	AA10	I/O
5	IO_L31N_5/D4	IO_L31N_5/D4	W11	DUAL
5	IO_L31P_5/D5	IO_L31P_5/D5	V11	DUAL
5	IO_L32N_5/GCLK3	IO_L32N_5/GCLK3	AA11	GCLK
5	IO_L32P_5/GCLK2	IO_L32P_5/GCLK2	Y11	GCLK
5	VCCO_5	VCCO_5	T9	VCCO
5	VCCO_5	VCCO_5	T10	VCCO
5	VCCO_5	VCCO_5	T11	VCCO
5	VCCO_5	VCCO_5	U8	VCCO
5	VCCO_5	VCCO_5	Y8	VCCO
6	IO	IO	Y1	I/O
6	IO_L01N_6/VRP_6	IO_L01N_6/VRP_6	Y3	DCI
6	IO_L01P_6/VRN_6	IO_L01P_6/VRN_6	Y2	DCI
6	IO_L16N_6	IO_L16N_6	W4	I/O
6	IO_L16P_6	IO_L16P_6	W3	I/O
6	IO_L17N_6	IO_L17N_6	W2	I/O
6	IO_L17P_6/VREF_6	IO_L17P_6/VREF_6	W1	VREF
6	IO_L19N_6	IO_L19N_6	V5	I/O
6	IO_L19P_6	IO_L19P_6	U5	I/O
6	IO_L20N_6	IO_L20N_6	V4	I/O
6	IO_L20P_6	IO_L20P_6	V3	I/O
6	IO_L21N_6	IO_L21N_6	V2	I/O
6	IO_L21P_6	IO_L21P_6	V1	I/O
6	IO_L22N_6	IO_L22N_6	T6	I/O
6	IO_L22P_6	IO_L22P_6	T5	I/O
6	IO_L23N_6	IO_L23N_6	U4	I/O
6	IO_L23P_6	IO_L23P_6	T4	I/O
6	IO_L24N_6/VREF_6	IO_L24N_6/VREF_6	U3	VREF
6	IO_L24P_6	IO_L24P_6	U2	I/O
6	N.C. (◆)	IO_L26N_6	T3	I/O
6	N.C. (◆)	IO_L26P_6	R4	I/O
6	IO_L27N_6	IO_L27N_6	T2	I/O
6	IO_L27P_6	IO_L27P_6	T1	I/O

Table 100: **FG456 Package Pinout *(Cont'd)***

Bank	3S400 Pin Name	3S1000, 3S1500, 3S2000 Pin Name	FG456 Pin Number	Type
6	N.C. (◆)	IO_L28N_6	R5	I/O
6	N.C. (◆)	IO_L28P_6	P6	I/O
6	N.C. (◆)	IO_L29N_6	R2	I/O
6	N.C. (◆)	IO_L29P_6	R1	I/O
6	N.C. (◆)	IO_L31N_6	P5	I/O
6	N.C. (◆)	IO_L31P_6	P4	I/O
6	N.C. (◆)	IO_L32N_6	P2	I/O
6	N.C. (◆)	IO_L32P_6	P1	I/O
6	N.C. (◆)	IO_L33N_6	N6	I/O
6	N.C. (◆)	IO_L33P_6	N5	I/O
6	IO_L34N_6/VREF_6	IO_L34N_6/VREF_6	N4	VREF
6	IO_L34P_6	IO_L34P_6	N3	I/O
6	IO_L35N_6	IO_L35N_6	N2	I/O
6	IO_L35P_6	IO_L35P_6	N1	I/O
6	IO_L38N_6	IO_L38N_6	M6	I/O
6	IO_L38P_6	IO_L38P_6	M5	I/O
6	IO_L39N_6	IO_L39N_6	M4	I/O
6	IO_L39P_6	IO_L39P_6	M3	I/O
6	IO_L40N_6	IO_L40N_6	M2	I/O
6	IO_L40P_6/VREF_6	IO_L40P_6/VREF_6	M1	VREF
6	VCCO_6	VCCO_6	M7	VCCO
6	VCCO_6	VCCO_6	N7	VCCO
6	VCCO_6	VCCO_6	P7	VCCO
6	VCCO_6	VCCO_6	R3	VCCO
6	VCCO_6	VCCO_6	R6	VCCO
7	IO	IO	C2	I/O
7	IO_L01N_7/VRP_7	IO_L01N_7/VRP_7	C3	DCI
7	IO_L01P_7/VRN_7	IO_L01P_7/VRN_7	C4	DCI
7	IO_L16N_7	IO_L16N_7	D1	I/O
7	IO_L16P_7/VREF_7	IO_L16P_7/VREF_7	C1	VREF
7	IO_L17N_7	IO_L17N_7	E4	I/O
7	IO_L17P_7	IO_L17P_7	D4	I/O
7	IO_L19N_7/VREF_7	IO_L19N_7/VREF_7	D3	VREF
7	IO_L19P_7	IO_L19P_7	D2	I/O
7	IO_L20N_7	IO_L20N_7	F4	I/O
7	IO_L20P_7	IO_L20P_7	E3	I/O
7	IO_L21N_7	IO_L21N_7	E1	I/O
7	IO_L21P_7	IO_L21P_7	E2	I/O
7	IO_L22N_7	IO_L22N_7	G6	I/O
7	IO_L22P_7	IO_L22P_7	F5	I/O

Table 100: **FG456 Package Pinout *(Cont'd)***

Bank	3S400 Pin Name	3S1000, 3S1500, 3S2000 Pin Name	FG456 Pin Number	Type
7	IO_L23N_7	IO_L23N_7	F2	I/O
7	IO_L23P_7	IO_L23P_7	F3	I/O
7	IO_L24N_7	IO_L24N_7	H5	I/O
7	IO_L24P_7	IO_L24P_7	G5	I/O
7	N.C. (◆)	IO_L26N_7	G3	I/O
7	N.C. (◆)	IO_L26P_7	G4	I/O
7	IO_L27N_7	IO_L27N_7	G1	I/O
7	IO_L27P_7/VREF_7	IO_L27P_7/VREF_7	G2	VREF
7	N.C. (◆)	IO_L28N_7	H1	I/O
7	N.C. (◆)	IO_L28P_7	H2	I/O
7	N.C. (◆)	IO_L29N_7	J4	I/O
7	N.C. (◆)	IO_L29P_7	H4	I/O
7	N.C. (◆)	IO_L31N_7	J5	I/O
7	N.C. (◆)	IO_L31P_7	J6	I/O
7	N.C. (◆)	IO_L32N_7	J1	I/O
7	N.C. (◆)	IO_L32P_7	J2	I/O
7	N.C. (◆)	IO_L33N_7	K5	I/O
7	N.C. (◆)	IO_L33P_7	K6	I/O
7	IO_L34N_7	IO_L34N_7	K3	I/O
7	IO_L34P_7	IO_L34P_7	K4	I/O
7	IO_L35N_7	IO_L35N_7	K1	I/O
7	IO_L35P_7	IO_L35P_7	K2	I/O
7	IO_L38N_7	IO_L38N_7	L5	I/O
7	IO_L38P_7	IO_L38P_7	L6	I/O
7	IO_L39N_7	IO_L39N_7	L3	I/O
7	IO_L39P_7	IO_L39P_7	L4	I/O
7	IO_L40N_7/VREF_7	IO_L40N_7/VREF_7	L1	VREF
7	IO_L40P_7	IO_L40P_7	L2	I/O
7	VCCO_7	VCCO_7	H3	VCCO
7	VCCO_7	VCCO_7	H6	VCCO
7	VCCO_7	VCCO_7	J7	VCCO
7	VCCO_7	VCCO_7	K7	VCCO
7	VCCO_7	VCCO_7	L7	VCCO
N/A	GND	GND	A1	GND
N/A	GND	GND	A22	GND
N/A	GND	GND	AA2	GND
N/A	GND	GND	AA21	GND
N/A	GND	GND	AB1	GND
N/A	GND	GND	AB22	GND
N/A	GND	GND	B2	GND

Table 100: **FG456 Package Pinout *(Cont'd)***

Bank	3S400 Pin Name	3S1000, 3S1500, 3S2000 Pin Name	FG456 Pin Number	Type
N/A	GND	GND	B21	GND
N/A	GND	GND	C9	GND
N/A	GND	GND	C14	GND
N/A	GND	GND	J3	GND
N/A	GND	GND	J9	GND
N/A	GND	GND	J10	GND
N/A	GND	GND	J11	GND
N/A	GND	GND	J12	GND
N/A	GND	GND	J13	GND
N/A	GND	GND	J14	GND
N/A	GND	GND	J20	GND
N/A	GND	GND	K9	GND
N/A	GND	GND	K10	GND
N/A	GND	GND	K11	GND
N/A	GND	GND	K12	GND
N/A	GND	GND	K13	GND
N/A	GND	GND	K14	GND
N/A	GND	GND	L9	GND
N/A	GND	GND	L10	GND
N/A	GND	GND	L11	GND
N/A	GND	GND	L12	GND
N/A	GND	GND	L13	GND
N/A	GND	GND	L14	GND
N/A	GND	GND	M9	GND
N/A	GND	GND	M10	GND
N/A	GND	GND	M11	GND
N/A	GND	GND	M12	GND
N/A	GND	GND	M13	GND
N/A	GND	GND	M14	GND
N/A	GND	GND	N9	GND
N/A	GND	GND	N10	GND
N/A	GND	GND	N11	GND
N/A	GND	GND	N12	GND
N/A	GND	GND	N13	GND
N/A	GND	GND	N14	GND
N/A	GND	GND	P3	GND
N/A	GND	GND	P9	GND
N/A	GND	GND	P10	GND
N/A	GND	GND	P11	GND
N/A	GND	GND	P12	GND

Table 100: **FG456 Package Pinout *(Cont'd)***

Bank	3S400 Pin Name	3S1000, 3S1500, 3S2000 Pin Name	FG456 Pin Number	Type
N/A	GND	GND	P13	GND
N/A	GND	GND	P14	GND
N/A	GND	GND	P20	GND
N/A	GND	GND	Y9	GND
N/A	GND	GND	Y14	GND
N/A	VCCAUX	VCCAUX	A6	VCCAUX
N/A	VCCAUX	VCCAUX	A17	VCCAUX
N/A	VCCAUX	VCCAUX	AB6	VCCAUX
N/A	VCCAUX	VCCAUX	AB17	VCCAUX
N/A	VCCAUX	VCCAUX	F1	VCCAUX
N/A	VCCAUX	VCCAUX	F22	VCCAUX
N/A	VCCAUX	VCCAUX	U1	VCCAUX
N/A	VCCAUX	VCCAUX	U22	VCCAUX
N/A	VCCINT	VCCINT	G7	VCCINT
N/A	VCCINT	VCCINT	G8	VCCINT
N/A	VCCINT	VCCINT	G15	VCCINT
N/A	VCCINT	VCCINT	G16	VCCINT
N/A	VCCINT	VCCINT	H7	VCCINT
N/A	VCCINT	VCCINT	H16	VCCINT
N/A	VCCINT	VCCINT	R7	VCCINT
N/A	VCCINT	VCCINT	R16	VCCINT
N/A	VCCINT	VCCINT	T7	VCCINT
N/A	VCCINT	VCCINT	T8	VCCINT
N/A	VCCINT	VCCINT	T15	VCCINT
N/A	VCCINT	VCCINT	T16	VCCINT
VCCAUX	CCLK	CCLK	AA22	CONFIG
VCCAUX	DONE	DONE	AB21	CONFIG
VCCAUX	HSWAP_EN	HSWAP_EN	B3	CONFIG
VCCAUX	M0	M0	AB2	CONFIG
VCCAUX	M1	M1	AA1	CONFIG
VCCAUX	M2	M2	AB3	CONFIG
VCCAUX	PROG_B	PROG_B	A2	CONFIG
VCCAUX	TCK	TCK	A21	JTAG
VCCAUX	TDI	TDI	B1	JTAG
VCCAUX	TDO	TDO	B22	JTAG
VCCAUX	TMS	TMS	A20	JTAG

User I/Os by Bank

Table 101 indicates how the available user-I/O pins are distributed between the eight I/O banks for the XC3S400 in the FG456 package. Similarly, Table 102 shows how the available user-I/O pins are distributed between the eight I/O banks for the XC3S1000, XC3S1500, and XC3S2000 in the FG456 package.

Table 101: **User I/Os Per Bank for XC3S400 in FG456 Package**

Edge	I/O Bank	Maximum I/O	All Possible I/O Pins by Type				
			I/O	DUAL	DCI	VREF	GCLK
Top	0	35	27	0	2	4	2
	1	35	27	0	2	4	2
Right	2	31	25	0	2	4	0
	3	31	25	0	2	4	0
Bottom	4	35	21	6	2	4	2
	5	35	21	6	2	4	2
Left	6	31	25	0	2	4	0
	7	31	25	0	2	4	0

Table 102: **User I/Os Per Bank for XC3S1000, XC3S1500, and XC3S2000 in FG456 Package**

Edge	I/O Bank	Maximum I/O	All Possible I/O Pins by Type				
			I/O	DUAL	DCI	VREF	GCLK
Top	0	40	31	0	2	5	2
	1	40	31	0	2	5	2
Right	2	43	37	0	2	4	0
	3	43	37	0	2	4	0
Bottom	4	41	26	6	2	5	2
	5	40	25	6	2	5	2
Left	6	43	37	0	2	4	0
	7	43	37	0	2	4	0

FG456 Footprint

Left Half of FG456 Package (Top View)

XC3S400 (264 max. user I/O)

196	**I/O:** Unrestricted, general-purpose user I/O
32	**VREF:** User I/O or input voltage reference for bank
69	**N.C.:** Unconnected pins for XC3S400 (◆)

XC3S1000, XC3S1500, XC3S2000 (333 max user I/O)

261	**I/O:** Unrestricted, general-purpose user I/O
36	**VREF:** User I/O or input voltage reference for bank
0	**N.C.:** No unconnected pins in this package

All devices

12	**DUAL:** Configuration pin, then possible user I/O
8	**GCLK:** User I/O or global clock buffer input
16	**DCI:** User I/O or reference resistor input for bank
7	**CONFIG:** Dedicated configuration pins
4	**JTAG:** Dedicated JTAG port pins
12	**VCCINT:** Internal core voltage supply (+1.2V)
40	**VCCO:** Output voltage supply for bank
8	**VCCAUX:** Auxiliary voltage supply (+2.5V)
52	**GND:** Ground

Bank 0

Bank		1	2	3	4	5	6	7	8	9	10	11
	A	GND	PROG_B	IO VREF_0	I/O L01P_0 VRN_0	I/O L09P_0	VCCAUX	I/O L19P_0 ◆	I/O L24P_0	I/O L27P_0	I/O	I/O L32P_0 GCLK6
	B	TDI	GND	HSWAP_EN	I/O L01N_0 VRP_0	I/O L09N_0	I/O L15P_0	I/O L19N_0 ◆	I/O L24N_0	I/O L27N_0	I/O L29P_0	I/O L32N_0 GCLK7
	C	I/O L16P_7 VREF_7	I/O	I/O L01N_7 VRP_7	I/O L01P_7 VRN_7	I/O L06P_0	I/O L15N_0	IO VREF_0	VCCO_0	GND	I/O L29N_0	I/O L31P_0 VREF_0
	D	I/O L16N_7	I/O L19P_7	I/O L19N_7 VREF_7	I/O L17P_7	I/O L06N_0	I/O L10P_0	I/O L16P_0	I/O L22P_0 ◆	I/O	I/O	I/O L31N_0
	E	I/O L21N_7	I/O L21P_7	I/O L20P_7	I/O L17N_7	IO VREF_0 ◆	I/O L10N_0	I/O L16N_0	I/O L22N_0 ◆	I/O L25P_0	I/O L28P_0	I/O L30P_0
	F	VCCAUX	I/O L23N_7	I/O L23P_7	I/O L20N_7	I/O L22P_7	I/O	IO VREF_0	VCCO_0	I/O L25N_0	I/O L28N_0	I/O L30N_0
Bank 7	G	I/O L27N_7	I/O L27P_7 VREF_7	I/O L26N_7 ◆	I/O L26P_7 ◆	I/O L24P_7	I/O L22N_7	VCCINT	VCCINT	VCCO_0	VCCO_0	VCCO_0
	H	I/O L28N_7 ◆	I/O L28P_7 ◆	VCCO_7	I/O L29P_7 ◆	I/O L24N_7	VCCO_7	VCCINT				
	J	I/O L32N_7 ◆	I/O L32P_7 ◆	GND	I/O L29N_7 ◆	I/O L31N_7 ◆	I/O L31P_7 ◆	VCCO_7		GND	GND	GND
	K	I/O L35N_7	I/O L35P_7	I/O L34N_7	I/O L34P_7	I/O L33N_7 ◆	I/O L33P_7 ◆	VCCO_7		GND	GND	GND
	L	I/O L40N_7 VREF_7	I/O L40P_7	I/O L39N_7	I/O L39P_7	I/O L38N_7	I/O L38P_7	VCCO_7		GND	GND	GND
	M	I/O L40P_6 VREF_6	I/O L40N_6	I/O L39P_6	I/O L39N_6	I/O L38P_6	I/O L38N_6	VCCO_6		GND	GND	GND
	N	I/O L35P_6	I/O L35N_6	I/O L34P_6	I/O L34N_6 VREF_6	I/O L33P_6 ◆	I/O L33N_6 ◆	VCCO_6		GND	GND	GND
	P	I/O L32P_6 ◆	I/O L32N_6 ◆	GND	I/O L31P_6 ◆	I/O L31N_6 ◆	I/O L28P_6 ◆	VCCO_6		GND	GND	GND
	R	I/O L29P_6 ◆	I/O L29N_6 ◆	VCCO_6	I/O L26P_6 ◆	I/O L28N_6 ◆	VCCO_6	VCCINT				
Bank 6	T	I/O L27P_6	I/O L27N_6	I/O L26N_6 ◆	I/O L23P_6	I/O L22P_6	I/O L22N_6	VCCINT	VCCINT	VCCO_5	VCCO_5	VCCO_5
	U	VCCAUX	I/O L24P_6	I/O L24N_6 VREF_6	I/O L23N_6	I/O L19P_6	IO VREF_5	I/O	VCCO_5	I/O ◆	I/O	I/O
	V	I/O L21P_6	I/O L21N_6	I/O L20P_6	I/O L20N_6	I/O L19N_6	I/O L15P_5	I/O	I/O L24P_5	I/O L27P_5	I/O	I/O L31P_5 D5
	W	I/O L17P_6 VREF_6	I/O L17N_6	I/O L16P_6	I/O L16N_6	I/O L09P_5	I/O L15N_5	I/O L19P_5 VREF_5 ◆	I/O L24N_5	I/O L27N_5 VREF_5	I/O L29P_5 VREF_5	I/O L31N_5 D4
	Y	I/O	I/O L01P_6 VRN_6	I/O L01N_6 VRP_6	I/O L01N_5 RDWR_B	I/O L09N_5	I/O L16P_5	I/O L19N_5 ◆	VCCO_5	GND	I/O L29N_5	I/O L32P_5 GCLK2
	AA	M1	GND	I/O L01P_5 CS_B	I/O L06P_5	I/O L10P_5 VRN_5	I/O L16N_5	I/O L22P_5 ◆	I/O L25P_5	I/O L28P_5 D7	I/O L30P_5	I/O L32N_5 GCLK3
	AB	GND	M0	M2	I/O L06N_5	I/O L10N_5 VRP_5	VCCAUX	I/O L22N_5 ◆	I/O L25N_5	I/O L28N_5 D6	I/O L30N_5	IO VREF_5

Bank 5

DS099-4_11a_030203

Figure 51: **FG456 Package Footprint (Top View)**

Right Half of FG456 Package (Top View)

Bank 1

12	13	14	15	16	17	18	19	20	21	22		
I/O	I/O L30N_1	I/O L28N_1	I/O L25P_1	I/O L22N_1 ◆	VCCAUX	I/O L10N_1 VREF_1	I/O L06N_1 VREF_1	TMS	TCK	GND	A	
I/O L32N_1 GCLK5	I/O L30P_1	I/O L28P_1	I/O L25N_1	I/O L22P_1 ◆	I/O L16N_1	I/O L10P_1	I/O L06P_1	I/O L01P_1 VRN_1	GND	TDO	B	
I/O L32P_1 GCLK4	I/O L29N_1	GND	VCCO_1	I/O L19N_1 ◆	I/O L16P_1	I/O L09N_1	I/O L01N_1 VRP_1	I/O L01N_2 VRP_2	I/O L01P_2 VRN_2	I/O	C	
I/O L31N_1 VREF_1	I/O L29P_1	I/O L27N_1	I/O L24N_1	I/O L19P_1 ◆	I/O L15N_1	I/O L09P_1	I/O L16P_2	I/O L16N_2	I/O L17N_2	I/O L17P_2 VREF_2	D	
I/O L31P_1	IO VREF_1	I/O L27P_1	I/O L24P_1	I/O	I/O L15P_1	I/O L19N_2	I/O L20N_2	I/O L20P_2	I/O L21N_2	I/O L21P_2	E	
I/O	I/O	IO VREF_1 ◆	VCCO_1	I/O	I/O	I/O L19P_2	I/O L23N_2 VREF_2	I/O L24N_2	I/O L24P_2	VCCAUX	F	
VCCO_1	VCCO_1	VCCO_1	VCCINT	VCCINT	I/O L22N_2	I/O L22P_2	I/O L23P_2	I/O L26N_2 ◆	I/O L27N_2	I/O L27P_2	G	Bank 2
				VCCINT	VCCO_2	I/O L28N_2 ◆	I/O L26P_2 ◆	VCCO_2	I/O L29N_2 ◆	I/O L29P_2 ◆	H	
GND	GND	GND		VCCO_2	I/O L28P_2 ◆	I/O L31N_2 ◆	I/O L31P_2 ◆	GND	I/O L32N_2 ◆	I/O L32P_2 ◆	J	
GND	GND	GND		VCCO_2	I/O L33N_2 ◆	I/O L33P_2 ◆	I/O L34N_2 VREF_2	I/O L34P_2	I/O L35N_2	I/O L35P_2	K	
GND	GND	GND		VCCO_2	I/O L38N_2	I/O L38P_2	I/O L39N_2	I/O L39P_2	I/O L40N_2	I/O L40P_2 VREF_2	L	
GND	GND	GND		VCCO_3	I/O L38P_3	I/O L38N_3	I/O L39P_3	I/O L39N_3	I/O L40P_3	I/O L40N_3 VREF_3	M	
GND	GND	GND		VCCO_3	I/O L33P_3 ◆	I/O L33N_3 ◆	I/O L34P_3 VREF_3	I/O L34N_3	I/O L35P_3	I/O L35N_3	N	
GND	GND	GND		VCCO_3	I/O L31P_3 ◆	I/O L31N_3 ◆	I/O L29N_3 ◆	GND	I/O L32P_3 ◆	I/O L32N_3 ◆	P	
				VCCINT	VCCO_3	I/O L24N_3	I/O L29P_3 ◆	VCCO_3	I/O L28P_3 ◆	I/O L28N_3 ◆	R	
VCCO_4	VCCO_4	VCCO_4	VCCINT	VCCINT	I/O L22N_3	I/O L24P_3	I/O L26P_3 ◆	I/O L26N_3 ◆	I/O L27P_3	I/O L27N_3	T	Bank 3
I/O L30N_4 D2	I/O L28N_4	I/O L25N_4	VCCO_4	I/O	I/O	I/O L22P_3	I/O L20N_3	I/O L23P_3 VREF_3	I/O L23N_3	VCCAUX	U	
I/O L30P_4 D3	I/O L28P_4	I/O L25P_4	I/O L22N_4 VREF_4 ◆	I/O L16N_4	I/O L10N_4	IO VREF_4	I/O L17N_3	I/O L20P_3	I/O L21P_3	I/O L21N_3	V	
I/O L31N_4 INIT_B	I/O	I/O	I/O L22P_4 ◆	I/O L16P_4	I/O L10P_4	I/O L06N_4 VREF_4	I/O L17P_3 VREF_3	I/O L19P_3	I/O L19N_3	I/O L16N_3	W	
I/O L31P_4 DOUT BUSY	I/O L29N_4	GND	VCCO_4	IO VREF_4	I/O L15N_4	I/O L06P_4	I/O L01P_3 VRN_3	I/O L01N_3 VRP_3	I/O	I/O L16P_3	Y	
I/O L32N_4 GCLK1	I/O L29P_4	I/O L27N_4 DN D0	I/O L24N_4	I/O L19N_4 ◆	I/O L15P_4	I/O L09N_4	I/O L05N_4 ◆	I/O L01N_4 VRP_4	GND	CCLK	AA	
I/O L32P_4 GCLK0	IO VREF_4	I/O L27P_4 D1	I/O L24P_4	I/O L19P_4 ◆	VCCAUX	I/O L09P_4	I/O L05P_4 ◆	I/O L01P_4 VRN_4	DONE	GND	AB	

Bank 4

DS099-4_11b_030503

Figure 52: FG456 Package Footprint (Top View) Continued

FG676: 676-lead Fine-pitch Ball Grid Array

The 676-lead fine-pitch ball grid array package, FG676, supports five different Spartan-3 devices, including the XC3S1000, XC3S1500, XC3S2000, XC3S4000, and XC3S5000. All five have nearly identical footprints but are slightly different, primarily due to unconnected pins on the XC3S1000 and XC3S1500. For example, because the XC3S1000 has fewer I/O pins, this device has 98 unconnected pins on the FG676 package, labeled as "N.C." In Table 103 and Figure 53, these unconnected pins are indicated with a black diamond symbol (◆). The XC3S1500, however, has only two unconnected pins, also labeled "N.C." in the pinout table but indicated with a black square symbol (■).

All the package pins appear in Table 103 and are sorted by bank number, then by pin name. Pairs of pins that form a differential I/O pair appear together in the table. The table also shows the pin number for each pin and the pin type, as defined earlier.

If there is a difference between the XC3S1000, XC3S1500, XC3S2000, XC3S4000, and XC3S5000 pinouts, then that difference is highlighted in Table 103. If the table entry is shaded grey, then there is an unconnected pin on either the XC3S1000 or XC3S1500 that maps to a user-I/O pin on the XC3S2000, XC3S4000, and XC3S5000. If the table entry is shaded tan, then the unconnected pin on either the XC3S1000 or XC3S1500 maps to a VREF-type pin on the XC3S2000, XC3S4000, and XC3S5000. If the other VREF pins in the bank all connect to a voltage reference to support a special I/O standard, then also connect the N.C. pin on the XC3S1000 or XC3S1500 to the same VREF voltage. This provides maximum flexibility as you could potentially migrate a design from the XC3S1000 through to the XC3S5000 FPGA without changing the printed circuit board.

An electronic version of this package pinout table and footprint diagram is available for download from the Xilinx website at http://www.xilinx.com/support/documentation/data_ sheets/s3_pin.zip.

Pinout Table

Table 103: **FG676 Package Pinout**

Bank	XC3S1000 Pin Name	XC3S1500 Pin Name	XC3S2000 Pin Name	XC3S4000 Pin Name	XC3S5000 Pin Name	FG676 Pin Number	Type
0	IO	IO	IO	IO	IO_L04N_0(3)	A3	I/O
0	IO	IO	IO	IO	IO	A5	I/O
0	IO	IO	IO	IO	IO	A6	I/O
0	IO	IO	IO	IO	IO_L04P_0(3)	C4	I/O
0	N.C. (◆)	IO	IO	IO	IO_L13N_0(3)	C8	I/O
0	IO	IO	IO	IO	IO	C12	I/O
0	IO	IO	IO	IO	IO	E13	I/O
0	IO	IO	IO	IO	IO	H11	I/O
0	IO	IO	IO	IO	IO	H12	I/O
0	IO/VREF_0	IO/VREF_0	IO/VREF_0	IO/VREF_0	IO/VREF_0	B3	VREF
0	IO/VREF_0	IO/VREF_0	IO/VREF_0	IO/VREF_0	IO/VREF_0	F7	VREF
0	IO/VREF_0	IO/VREF_0	IO/VREF_0	IO/VREF_0	IO/VREF_0	G10	VREF
0	IO_L01N_0/VRP_0	IO_L01N_0/VRP_0	IO_L01N_0/VRP_0	IO_L01N_0/VRP_0	IO_L01N_0/VRP_0	E5	DCI
0	IO_L01P_0/VRN_0	IO_L01P_0/VRN_0	IO_L01P_0/VRN_0	IO_L01P_0/VRN_0	IO_L01P_0/VRN_0	D5	DCI
0	IO_L05N_0	IO_L05N_0	IO_L05N_0	IO_L05N_0	IO_L05N_0	B4	I/O
0	IO_L05P_0/VREF_0	IO_L05P_0/VREF_0	IO_L05P_0/VREF_0	IO_L05P_0/VREF_0	IO_L05P_0/VREF_0	A4	VREF
0	IO_L06N_0	IO_L06N_0	IO_L06N_0	IO_L06N_0	IO_L06N_0	C5	I/O
0	IO_L06P_0	IO_L06P_0	IO_L06P_0	IO_L06P_0	IO_L06P_0	B5	I/O
0	IO_L07N_0	IO_L07N_0	IO_L07N_0	IO_L07N_0	IO_L07N_0	E6	I/O
0	IO_L07P_0	IO_L07P_0	IO_L07P_0	IO_L07P_0	IO_L07P_0	D6	I/O
0	IO_L08N_0	IO_L08N_0	IO_L08N_0	IO_L08N_0	IO_L08N_0	C6	I/O
0	IO_L08P_0	IO_L08P_0	IO_L08P_0	IO_L08P_0	IO_L08P_0	B6	I/O

Table 103: **FG676 Package Pinout *(Cont'd)***

Bank	XC3S1000 Pin Name	XC3S1500 Pin Name	XC3S2000 Pin Name	XC3S4000 Pin Name	XC3S5000 Pin Name	FG676 Pin Number	Type
0	IO_L09N_0	IO_L09N_0	IO_L09N_0	IO_L09N_0	IO_L09N_0	E7	I/O
0	IO_L09P_0	IO_L09P_0	IO_L09P_0	IO_L09P_0	IO_L09P_0	D7	I/O
0	IO_L10N_0	IO_L10N_0	IO_L10N_0	IO_L10N_0	IO_L10N_0	B7	I/O
0	IO_L10P_0	IO_L10P_0	IO_L10P_0	IO_L10P_0	IO_L10P_0	A7	I/O
0	N.C. (◆)	IO_L11N_0	IO_L11N_0	IO_L11N_0	IO_L11N_0	G8	I/O
0	N.C. (◆)	IO_L11P_0	IO_L11P_0	IO_L11P_0	IO_L11P_0	F8	I/O
0	N.C. (◆)	IO_L12N_0	IO_L12N_0	IO_L12N_0	IO(3)	E8	I/O
0	N.C. (◆)	IO_L12P_0	IO_L12P_0	IO_L12P_0	IO(3)	D8	I/O
0	IO_L15N_0	IO_L15N_0	IO_L15N_0	IO_L15N_0	IO_L13P_0(3)	B8	I/O
0	IO_L15P_0	IO_L15P_0	IO_L15P_0	IO_L15P_0	IO(3)	A8	I/O
0	IO_L16N_0	IO_L16N_0	IO_L16N_0	IO_L16N_0	IO_L16N_0	G9	I/O
0	IO_L16P_0	IO_L16P_0	IO_L16P_0	IO_L16P_0	IO_L16P_0	F9	I/O
0	N.C. (◆)	IO_L17N_0	IO_L17N_0	IO_L17N_0	IO_L17N_0	E9	I/O
0	N.C. (◆)	IO_L17P_0	IO_L17P_0	IO_L17P_0	IO_L17P_0	D9	I/O
0	N.C. (◆)	IO_L18N_0	IO_L18N_0	IO_L18N_0	IO_L18N_0	C9	I/O
0	N.C. (◆)	IO_L18P_0	IO_L18P_0	IO_L18P_0	IO_L18P_0	B9	I/O
0	IO_L19N_0	IO_L19N_0	IO_L19N_0	IO_L19N_0	IO_L19N_0	F10	I/O
0	IO_L19P_0	IO_L19P_0	IO_L19P_0	IO_L19P_0	IO_L19P_0	E10	I/O
0	IO_L22N_0	IO_L22N_0	IO_L22N_0	IO_L22N_0	IO_L22N_0	D10	I/O
0	IO_L22P_0	IO_L22P_0	IO_L22P_0	IO_L22P_0	IO_L22P_0	C10	I/O
0	N.C. (◆)	IO_L23N_0	IO_L23N_0	IO_L23N_0	IO_L23N_0	B10	I/O
0	N.C. (◆)	IO_L23P_0	IO_L23P_0	IO_L23P_0	IO_L23P_0	A10	I/O
0	IO_L24N_0	IO_L24N_0	IO_L24N_0	IO_L24N_0	IO_L24N_0	G11	I/O
0	IO_L24P_0	IO_L24P_0	IO_L24P_0	IO_L24P_0	IO_L24P_0	F11	I/O
0	IO_L25N_0	IO_L25N_0	IO_L25N_0	IO_L25N_0	IO_L25N_0	E11	I/O
0	IO_L25P_0	IO_L25P_0	IO_L25P_0	IO_L25P_0	IO_L25P_0	D11	I/O
0	N.C. (◆)	IO_L26N_0	IO_L26N_0	IO_L26N_0	IO_L26N_0	B11	I/O
0	N.C. (◆)	IO_L26P_0/VREF_0	IO_L26P_0/VREF_0	IO_L26P_0/VREF_0	IO_L26P_0/VREF_0	A11	VREF
0	IO_L27N_0	IO_L27N_0	IO_L27N_0	IO_L27N_0	IO_L27N_0	G12	I/O
0	IO_L27P_0	IO_L27P_0	IO_L27P_0	IO_L27P_0	IO_L27P_0	H13	I/O
0	IO_L28N_0	IO_L28N_0	IO_L28N_0	IO_L28N_0	IO_L28N_0	F12	I/O
0	IO_L28P_0	IO_L28P_0	IO_L28P_0	IO_L28P_0	IO_L28P_0	E12	I/O
0	IO_L29N_0	IO_L29N_0	IO_L29N_0	IO_L29N_0	IO_L29N_0	B12	I/O
0	IO_L29P_0	IO_L29P_0	IO_L29P_0	IO_L29P_0	IO_L29P_0	A12	I/O
0	IO_L30N_0	IO_L30N_0	IO_L30N_0	IO_L30N_0	IO_L30N_0	G13	I/O
0	IO_L30P_0	IO_L30P_0	IO_L30P_0	IO_L30P_0	IO_L30P_0	F13	I/O
0	IO_L31N_0	IO_L31N_0	IO_L31N_0	IO_L31N_0	IO_L31N_0	D13	I/O
0	IO_L31P_0/VREF_0	IO_L31P_0/VREF_0	IO_L31P_0/VREF_0	IO_L31P_0/VREF_0	IO_L31P_0/VREF_0	C13	VREF
0	IO_L32N_0/GCLK7	IO_L32N_0/GCLK7	IO_L32N_0/GCLK7	IO_L32N_0/GCLK7	IO_L32N_0/GCLK7	B13	GCLK
0	IO_L32P_0/GCLK6	IO_L32P_0/GCLK6	IO_L32P_0/GCLK6	IO_L32P_0/GCLK6	IO_L32P_0/GCLK6	A13	GCLK
0	VCCO_0	VCCO_0	VCCO_0	VCCO_0	VCCO_0	C7	VCCO
0	VCCO_0	VCCO_0	VCCO_0	VCCO_0	VCCO_0	C11	VCCO

Table 103: **FG676 Package Pinout *(Cont'd)***

Bank	XC3S1000 Pin Name	XC3S1500 Pin Name	XC3S2000 Pin Name	XC3S4000 Pin Name	XC3S5000 Pin Name	FG676 Pin Number	Type
0	VCCO_0	VCCO_0	VCCO_0	VCCO_0	VCCO_0	H9	VCCO
0	VCCO_0	VCCO_0	VCCO_0	VCCO_0	VCCO_0	H10	VCCO
0	VCCO_0	VCCO_0	VCCO_0	VCCO_0	VCCO_0	J11	VCCO
0	VCCO_0	VCCO_0	VCCO_0	VCCO_0	VCCO_0	J12	VCCO
0	VCCO_0	VCCO_0	VCCO_0	VCCO_0	VCCO_0	J13	VCCO
0	VCCO_0	VCCO_0	VCCO_0	VCCO_0	VCCO_0	K13	VCCO
1	IO	IO	IO	IO	IO	A14	I/O
1	IO	IO	IO	IO	IO	A22	I/O
1	IO	IO	IO	IO	IO	A23	I/O
1	IO	IO	IO	IO	IO	D16	I/O
1	IO	IO	IO	IO	IO_L17P_1[(3)]	E18	I/O
1	IO	IO	IO	IO	IO	F14	I/O
1	IO	IO	IO	IO	IO	F20	I/O
1	IO	IO	IO	IO	IO	G19	I/O
1	IO/VREF_1	IO/VREF_1	IO/VREF_1	IO/VREF_1	IO/VREF_1	C15	VREF
1	IO/VREF_1	IO/VREF_1	IO/VREF_1	IO/VREF_1	IO/VREF_1	C17	VREF
1	N.C. (◆)	IO/VREF_1	IO/VREF_1	IO/VREF_1	IO_L17N_1/VREF_1[(3)]	D18	VREF
1	IO_L01N_1/VRP_1	IO_L01N_1/VRP_1	IO_L01N_1/VRP_1	IO_L01N_1/VRP_1	IO_L01N_1/VRP_1	D22	DCI
1	IO_L01P_1/VRN_1	IO_L01P_1/VRN_1	IO_L01P_1/VRN_1	IO_L01P_1/VRN_1	IO_L01P_1/VRN_1	E22	DCI
1	IO_L04N_1	IO_L04N_1	IO_L04N_1	IO_L04N_1	IO_L04N_1	B23	I/O
1	IO_L04P_1	IO_L04P_1	IO_L04P_1	IO_L04P_1	IO_L04P_1	C23	I/O
1	IO_L05N_1	IO_L05N_1	IO_L05N_1	IO_L05N_1	IO_L05N_1	E21	I/O
1	IO_L05P_1	IO_L05P_1	IO_L05P_1	IO_L05P_1	IO_L05P_1	F21	I/O
1	IO_L06N_1/VREF_1	IO_L06N_1/VREF_1	IO_L06N_1/VREF_1	IO_L06N_1/VREF_1	IO_L06N_1/VREF_1	B22	VREF
1	IO_L06P_1	IO_L06P_1	IO_L06P_1	IO_L06P_1	IO_L06P_1	C22	I/O
1	IO_L07N_1	IO_L07N_1	IO_L07N_1	IO_L07N_1	IO_L07N_1	C21	I/O
1	IO_L07P_1	IO_L07P_1	IO_L07P_1	IO_L07P_1	IO_L07P_1	D21	I/O
1	IO_L08N_1	IO_L08N_1	IO_L08N_1	IO_L08N_1	IO_L08N_1	A21	I/O
1	IO_L08P_1	IO_L08P_1	IO_L08P_1	IO_L08P_1	IO_L08P_1	B21	I/O
1	IO_L09N_1	IO_L09N_1	IO_L09N_1	IO_L09N_1	IO_L09N_1	D20	I/O
1	IO_L09P_1	IO_L09P_1	IO_L09P_1	IO_L09P_1	IO_L09P_1	E20	I/O
1	IO_L10N_1/VREF_1	IO_L10N_1/VREF_1	IO_L10N_1/VREF_1	IO_L10N_1/VREF_1	IO_L10N_1/VREF_1	A20	VREF
1	IO_L10P_1	IO_L10P_1	IO_L10P_1	IO_L10P_1	IO_L10P_1	B20	I/O
1	N.C. (◆)	IO_L11N_1	IO_L11N_1	IO_L11N_1	IO_L11N_1	E19	I/O
1	N.C. (◆)	IO_L11P_1	IO_L11P_1	IO_L11P_1	IO_L11P_1	F19	I/O
1	N.C. (◆)	IO_L12N_1	IO_L12N_1	IO_L12N_1	IO_L12N_1	C19	I/O
1	N.C. (◆)	IO_L12P_1	IO_L12P_1	IO_L12P_1	IO_L12P_1	D19	I/O
1	IO_L15N_1	IO_L15N_1	IO_L15N_1	IO_L15N_1	IO_L15N_1	A19	I/O
1	IO_L15P_1	IO_L15P_1	IO_L15P_1	IO_L15P_1	IO_L15P_1	B19	I/O
1	IO_L16N_1	IO_L16N_1	IO_L16N_1	IO_L16N_1	IO_L16N_1	F18	I/O
1	IO_L16P_1	IO_L16P_1	IO_L16P_1	IO_L16P_1	IO_L16P_1	G18	I/O
1	N.C. (◆)	IO_L18N_1	IO_L18N_1	IO_L18N_1	IO[(3)]	B18	I/O

Table 103: **FG676 Package Pinout *(Cont'd)***

Bank	XC3S1000 Pin Name	XC3S1500 Pin Name	XC3S2000 Pin Name	XC3S4000 Pin Name	XC3S5000 Pin Name	FG676 Pin Number	Type
1	N.C. (◆)	IO_L18P_1	IO_L18P_1	IO_L18P_1	IO[3]	C18	I/O
1	IO_L19N_1	IO_L19N_1	IO_L19N_1	IO_L19N_1	IO_L19N_1	F17	I/O
1	IO_L19P_1	IO_L19P_1	IO_L19P_1	IO_L19P_1	IO_L19P_1	G17	I/O
1	IO_L22N_1	IO_L22N_1	IO_L22N_1	IO_L22N_1	IO_L22N_1	D17	I/O
1	IO_L22P_1	IO_L22P_1	IO_L22P_1	IO_L22P_1	IO_L22P_1	E17	I/O
1	N.C. (◆)	IO_L23N_1	IO_L23N_1	IO_L23N_1	IO_L23N_1	A17	I/O
1	N.C. (◆)	IO_L23P_1	IO_L23P_1	IO_L23P_1	IO_L23P_1	B17	I/O
1	IO_L24N_1	IO_L24N_1	IO_L24N_1	IO_L24N_1	IO_L24N_1	G16	I/O
1	IO_L24P_1	IO_L24P_1	IO_L24P_1	IO_L24P_1	IO_L24P_1	H16	I/O
1	IO_L25N_1	IO_L25N_1	IO_L25N_1	IO_L25N_1	IO_L25N_1	E16	I/O
1	IO_L25P_1	IO_L25P_1	IO_L25P_1	IO_L25P_1	IO_L25P_1	F16	I/O
1	N.C. (◆)	IO_L26N_1	IO_L26N_1	IO_L26N_1	IO_L26N_1	A16	I/O
1	N.C. (◆)	IO_L26P_1	IO_L26P_1	IO_L26P_1	IO_L26P_1	B16	I/O
1	IO_L27N_1	IO_L27N_1	IO_L27N_1	IO_L27N_1	IO_L27N_1	G15	I/O
1	IO_L27P_1	IO_L27P_1	IO_L27P_1	IO_L27P_1	IO_L27P_1	H15	I/O
1	IO_L28N_1	IO_L28N_1	IO_L28N_1	IO_L28N_1	IO_L28N_1	E15	I/O
1	IO_L28P_1	IO_L28P_1	IO_L28P_1	IO_L28P_1	IO_L28P_1	F15	I/O
1	IO_L29N_1	IO_L29N_1	IO_L29N_1	IO_L29N_1	IO_L29N_1	A15	I/O
1	IO_L29P_1	IO_L29P_1	IO_L29P_1	IO_L29P_1	IO_L29P_1	B15	I/O
1	IO_L30N_1	IO_L30N_1	IO_L30N_1	IO_L30N_1	IO_L30N_1	G14	I/O
1	IO_L30P_1	IO_L30P_1	IO_L30P_1	IO_L30P_1	IO_L30P_1	H14	I/O
1	IO_L31N_1/VREF_1	IO_L31N_1/VREF_1	IO_L31N_1/VREF_1	IO_L31N_1/VREF_1	IO_L31N_1/VREF_1	D14	VREF
1	IO_L31P_1	IO_L31P_1	IO_L31P_1	IO_L31P_1	IO_L31P_1	E14	I/O
1	IO_L32N_1/GCLK5	IO_L32N_1/GCLK5	IO_L32N_1/GCLK5	IO_L32N_1/GCLK5	IO_L32N_1/GCLK5	B14	GCLK
1	IO_L32P_1/GCLK4	IO_L32P_1/GCLK4	IO_L32P_1/GCLK4	IO_L32P_1/GCLK4	IO_L32P_1/GCLK4	C14	GCLK
1	VCCO_1	VCCO_1	VCCO_1	VCCO_1	VCCO_1	C16	VCCO
1	VCCO_1	VCCO_1	VCCO_1	VCCO_1	VCCO_1	C20	VCCO
1	VCCO_1	VCCO_1	VCCO_1	VCCO_1	VCCO_1	H17	VCCO
1	VCCO_1	VCCO_1	VCCO_1	VCCO_1	VCCO_1	H18	VCCO
1	VCCO_1	VCCO_1	VCCO_1	VCCO_1	VCCO_1	J14	VCCO
1	VCCO_1	VCCO_1	VCCO_1	VCCO_1	VCCO_1	J15	VCCO
1	VCCO_1	VCCO_1	VCCO_1	VCCO_1	VCCO_1	J16	VCCO
1	VCCO_1	VCCO_1	VCCO_1	VCCO_1	VCCO_1	K14	VCCO
2	N.C. (◆)	N.C. (■)	IO	IO	IO	F22	I/O
2	IO_L01N_2/VRP_2	IO_L01N_2/VRP_2	IO_L01N_2/VRP_2	IO_L01N_2/VRP_2	IO_L01N_2/VRP_2	C25	DCI
2	IO_L01P_2/VRN_2	IO_L01P_2/VRN_2	IO_L01P_2/VRN_2	IO_L01P_2/VRN_2	IO_L01P_2/VRN_2	C26	DCI
2	IO_L02N_2	IO_L02N_2	IO_L02N_2	IO_L02N_2	IO_L02N_2	E23	I/O
2	IO_L02P_2	IO_L02P_2	IO_L02P_2	IO_L02P_2	IO_L02P_2	E24	I/O
2	IO_L03N_2/VREF_2	IO_L03N_2/VREF_2[1]	IO_L03N_2/VREF_2	IO_L03N_2/VREF_2	IO_L03N_2/VREF_2	D25	VREF[1]
2	IO_L03P_2	IO_L03P_2	IO_L03P_2	IO_L03P_2	IO_L03P_2	D26	I/O
2	N.C. (◆)	IO_L05N_2	IO_L05N_2	IO_L05N_2	IO_L05N_2	E25	I/O
2	N.C. (◆)	IO_L05P_2	IO_L05P_2	IO_L05P_2	IO_L05P_2	E26	I/O

Table 103: **FG676 Package Pinout *(Cont'd)***

Bank	XC3S1000 Pin Name	XC3S1500 Pin Name	XC3S2000 Pin Name	XC3S4000 Pin Name	XC3S5000 Pin Name	FG676 Pin Number	Type
2	N.C. (◆)	IO_L06N_2	IO_L06N_2	IO_L06N_2	IO_L06N_2	G20	I/O
2	N.C. (◆)	IO_L06P_2	IO_L06P_2	IO_L06P_2	IO_L06P_2	G21	I/O
2	N.C. (◆)	IO_L07N_2	IO_L07N_2	IO_L07N_2	IO_L07N_2	F23	I/O
2	N.C. (◆)	IO_L07P_2	IO_L07P_2	IO_L07P_2	IO_L07P_2	F24	I/O
2	N.C. (◆)	IO_L08N_2	IO_L08N_2	IO_L08N_2	IO_L08N_2	G22	I/O
2	N.C. (◆)	IO_L08P_2	IO_L08P_2	IO_L08P_2	IO_L08P_2	G23	I/O
2	N.C. (◆)	IO_L09N_2/VREF_2[1]	IO_L09N_2/VREF_2	IO_L09N_2/VREF_2	IO_L09N_2/VREF_2	F25	VREF[1]
2	N.C. (◆)	IO_L09P_2	IO_L09P_2	IO_L09P_2	IO_L09P_2	F26	I/O
2	N.C. (◆)	IO_L10N_2	IO_L10N_2	IO_L10N_2	IO_L10N_2	G25	I/O
2	N.C. (◆)	IO_L10P_2	IO_L10P_2	IO_L10P_2	IO_L10P_2	G26	I/O
2	IO_L14N_2	IO_L14N_2	IO_L14N_2[2]	IO_L11N_2[2]	IO_L11N_2	H20	I/O
2	IO_L14P_2	IO_L14P_2	IO_L14P_2[2]	IO_L11P_2[2]	IO_L11P_2	H21	I/O
2	IO_L16N_2	IO_L16N_2	IO_L16N_2[2]	IO_L12N_2[2]	IO_L12N_2	H22	I/O
2	IO_L16P_2	IO_L16P_2	IO_L16P_2[2]	IO_L12P_2[2]	IO_L12P_2	J21	I/O
2	IO_L17N_2	IO_L17N_2	IO_L17N_2[2]	IO_L13N_2[2]	IO[3]	H23	I/O
2	IO_L17P_2/VREF_2	IO_L17P_2/VREF_2	IO_L17P_2[2]/VREF_2	IO_L13P_2[2]/VREF_2	IO/VREF_2[3]	H24	VREF
2	IO_L19N_2	IO_L19N_2	IO_L19N_2	IO_L19N_2	IO_L19N_2	H25	I/O
2	IO_L19P_2	IO_L19P_2	IO_L19P_2	IO_L19P_2	IO_L19P_2	H26	I/O
2	IO_L20N_2	IO_L20N_2	IO_L20N_2	IO_L20N_2	IO_L20N_2	J20	I/O
2	IO_L20P_2	IO_L20P_2	IO_L20P_2	IO_L20P_2	IO_L20P_2	K20	I/O
2	IO_L21N_2	IO_L21N_2	IO_L21N_2	IO_L21N_2	IO_L21N_2	J22	I/O
2	IO_L21P_2	IO_L21P_2	IO_L21P_2	IO_L21P_2	IO_L21P_2	J23	I/O
2	IO_L22N_2	IO_L22N_2	IO_L22N_2	IO_L22N_2	IO_L22N_2	J24	I/O
2	IO_L22P_2	IO_L22P_2	IO_L22P_2	IO_L22P_2	IO_L22P_2	J25	I/O
2	IO_L23N_2/VREF_2	IO_L23N_2/VREF_2	IO_L23N_2/VREF_2	IO_L23N_2/VREF_2	IO_L23N_2/VREF_2	K21	VREF
2	IO_L23P_2	IO_L23P_2	IO_L23P_2	IO_L23P_2	IO_L23P_2	K22	I/O
2	IO_L24N_2	IO_L24N_2	IO_L24N_2	IO_L24N_2	IO_L24N_2	K23	I/O
2	IO_L24P_2	IO_L24P_2	IO_L24P_2	IO_L24P_2	IO_L24P_2	K24	I/O
2	IO_L26N_2	IO_L26N_2	IO_L26N_2	IO_L26N_2	IO_L26N_2	K25	I/O
2	IO_L26P_2	IO_L26P_2	IO_L26P_2	IO_L26P_2	IO_L26P_2	K26	I/O
2	IO_L27N_2	IO_L27N_2	IO_L27N_2	IO_L27N_2	IO_L27N_2	L19	I/O
2	IO_L27P_2	IO_L27P_2	IO_L27P_2	IO_L27P_2	IO_L27P_2	L20	I/O
2	IO_L28N_2	IO_L28N_2	IO_L28N_2	IO_L28N_2	IO_L28N_2	L21	I/O
2	IO_L28P_2	IO_L28P_2	IO_L28P_2	IO_L28P_2	IO_L28P_2	L22	I/O
2	IO_L29N_2	IO_L29N_2	IO_L29N_2	IO_L29N_2	IO_L29N_2	L25	I/O
2	IO_L29P_2	IO_L29P_2	IO_L29P_2	IO_L29P_2	IO_L29P_2	L26	I/O
2	IO_L31N_2	IO_L31N_2	IO_L31N_2	IO_L31N_2	IO_L31N_2	M19	I/O
2	IO_L31P_2	IO_L31P_2	IO_L31P_2	IO_L31P_2	IO_L31P_2	M20	I/O
2	IO_L32N_2	IO_L32N_2	IO_L32N_2	IO_L32N_2	IO_L32N_2	M21	I/O
2	IO_L32P_2	IO_L32P_2	IO_L32P_2	IO_L32P_2	IO_L32P_2	M22	I/O
2	IO_L33N_2	IO_L33N_2	IO_L33N_2	IO_L33N_2	IO_L33N_2	L23	I/O
2	IO_L33P_2	IO_L33P_2	IO_L33P_2	IO_L33P_2	IO_L33P_2	M24	I/O

Table 103: **FG676 Package Pinout *(Cont'd)***

Bank	XC3S1000 Pin Name	XC3S1500 Pin Name	XC3S2000 Pin Name	XC3S4000 Pin Name	XC3S5000 Pin Name	FG676 Pin Number	Type
2	IO_L34N_2/VREF_2	IO_L34N_2/VREF_2	IO_L34N_2/VREF_2	IO_L34N_2/VREF_2	IO_L34N_2/VREF_2	M25	VREF
2	IO_L34P_2	IO_L34P_2	IO_L34P_2	IO_L34P_2	IO_L34P_2	M26	I/O
2	IO_L35N_2	IO_L35N_2	IO_L35N_2	IO_L35N_2	IO_L35N_2	N19	I/O
2	IO_L35P_2	IO_L35P_2	IO_L35P_2	IO_L35P_2	IO_L35P_2	N20	I/O
2	IO_L38N_2	IO_L38N_2	IO_L38N_2	IO_L38N_2	IO_L38N_2	N21	I/O
2	IO_L38P_2	IO_L38P_2	IO_L38P_2	IO_L38P_2	IO_L38P_2	N22	I/O
2	IO_L39N_2	IO_L39N_2	IO_L39N_2	IO_L39N_2	IO_L39N_2	N23	I/O
2	IO_L39P_2	IO_L39P_2	IO_L39P_2	IO_L39P_2	IO_L39P_2	N24	I/O
2	IO_L40N_2	IO_L40N_2	IO_L40N_2	IO_L40N_2	IO_L40N_2	N25	I/O
2	IO_L40P_2/VREF_2	IO_L40P_2/VREF_2	IO_L40P_2/VREF_2	IO_L40P_2/VREF_2	IO_L40P_2/VREF_2	N26	VREF
2	VCCO_2	VCCO_2	VCCO_2	VCCO_2	VCCO_2	G24	VCCO
2	VCCO_2	VCCO_2	VCCO_2	VCCO_2	VCCO_2	J19	VCCO
2	VCCO_2	VCCO_2	VCCO_2	VCCO_2	VCCO_2	K19	VCCO
2	VCCO_2	VCCO_2	VCCO_2	VCCO_2	VCCO_2	L18	VCCO
2	VCCO_2	VCCO_2	VCCO_2	VCCO_2	VCCO_2	L24	VCCO
2	VCCO_2	VCCO_2	VCCO_2	VCCO_2	VCCO_2	M18	VCCO
2	VCCO_2	VCCO_2	VCCO_2	VCCO_2	VCCO_2	N17	VCCO
2	VCCO_2	VCCO_2	VCCO_2	VCCO_2	VCCO_2	N18	VCCO
3	IO_L01N_3/VRP_3	IO_L01N_3/VRP_3	IO_L01N_3/VRP_3	IO_L01N_3/VRP_3	IO_L01N_3/VRP_3	AA22	DCI
3	IO_L01P_3/VRN_3	IO_L01P_3/VRN_3	IO_L01P_3/VRN_3	IO_L01P_3/VRN_3	IO_L01P_3/VRN_3	AA21	DCI
3	IO_L02N_3/VREF_3	IO_L02N_3/VREF_3	IO_L02N_3/VREF_3	IO_L02N_3/VREF_3	IO_L02N_3/VREF_3	AB24	VREF
3	IO_L02P_3	IO_L02P_3	IO_L02P_3	IO_L02P_3	IO_L02P_3	AB23	I/O
3	IO_L03N_3	IO_L03N_3	IO_L03N_3	IO_L03N_3	IO_L03N_3	AC26	I/O
3	IO_L03P_3	IO_L03P_3	IO_L03P_3	IO_L03P_3	IO_L03P_3	AC25	I/O
3	N.C. (◆)	IO_L05N_3	IO_L05N_3	IO_L05N_3	IO_L05N_3	Y21	I/O
3	N.C. (◆)	IO_L05P_3	IO_L05P_3	IO_L05P_3	IO_L05P_3	Y20	I/O
3	N.C. (◆)	IO_L06N_3	IO_L06N_3	IO_L06N_3	IO_L06N_3	AB26	I/O
3	N.C. (◆)	IO_L06P_3	IO_L06P_3	IO_L06P_3	IO_L06P_3	AB25	I/O
3	N.C. (◆)	IO_L07N_3	IO_L07N_3	IO_L07N_3	IO_L07N_3	AA24	I/O
3	N.C. (◆)	IO_L07P_3	IO_L07P_3	IO_L07P_3	IO_L07P_3	AA23	I/O
3	N.C. (◆)	IO_L08N_3	IO_L08N_3	IO_L08N_3	IO_L08N_3	Y23	I/O
3	N.C. (◆)	IO_L08P_3	IO_L08P_3	IO_L08P_3	IO_L08P_3	Y22	I/O
3	N.C. (◆)	IO_L09N_3	IO_L09N_3	IO_L09N_3	IO_L09N_3	AA26	I/O
3	N.C. (◆)	IO_L09P_3/VREF_3	IO_L09P_3/VREF_3	IO_L09P_3/VREF_3	IO_L09P_3/VREF_3	AA25	VREF
3	N.C. (◆)	IO_L10N_3	IO_L10N_3	IO_L10N_3	IO_L10N_3	W21	I/O
3	N.C. (◆)	IO_L10P_3	IO_L10P_3	IO_L10P_3	IO_L10P_3	W20	I/O
3	IO_L14N_3	IO_L14N_3	IO_L14N_3	IO_L14N_3	IO_L14N_3	Y26	I/O
3	IO_L14P_3	IO_L14P_3	IO_L14P_3	IO_L14P_3	IO_L14P_3	Y25	I/O
3	IO_L16N_3	IO_L16N_3	IO_L16N_3	IO_L16N_3	IO_L16N_3	V21	I/O
3	IO_L16P_3	IO_L16P_3	IO_L16P_3	IO_L16P_3	IO_L16P_3	W22	I/O
3	IO_L17N_3	IO_L17N_3	IO_L17N_3	IO_L17N_3	IO_L17N_3	W24	I/O
3	IO_L17P_3/VREF_3	IO_L17P_3/VREF_3	IO_L17P_3/VREF_3	IO_L17P_3/VREF_3	IO_L17P_3/VREF_3	W23	VREF

Table 103: **FG676 Package Pinout *(Cont'd)***

Bank	XC3S1000 Pin Name	XC3S1500 Pin Name	XC3S2000 Pin Name	XC3S4000 Pin Name	XC3S5000 Pin Name	FG676 Pin Number	Type
3	IO_L19N_3	IO_L19N_3	IO_L19N_3	IO_L19N_3	IO_L19N_3	W26	I/O
3	IO_L19P_3	IO_L19P_3	IO_L19P_3	IO_L19P_3	IO_L19P_3	W25	I/O
3	IO_L20N_3	IO_L20N_3	IO_L20N_3	IO_L20N_3	IO_L20N_3	U20	I/O
3	IO_L20P_3	IO_L20P_3	IO_L20P_3	IO_L20P_3	IO_L20P_3	V20	I/O
3	IO_L21N_3	IO_L21N_3	IO_L21N_3	IO_L21N_3	IO_L21N_3	V23	I/O
3	IO_L21P_3	IO_L21P_3	IO_L21P_3	IO_L21P_3	IO_L21P_3	V22	I/O
3	IO_L22N_3	IO_L22N_3	IO_L22N_3	IO_L22N_3	IO_L22N_3	V25	I/O
3	IO_L22P_3	IO_L22P_3	IO_L22P_3	IO_L22P_3	IO_L22P_3	V24	I/O
3	IO_L23N_3	IO_L23N_3	IO_L23N_3	IO_L23N_3	IO_L23N_3	U22	I/O
3	IO_L23P_3/VREF_3	IO_L23P_3/VREF_3	IO_L23P_3/VREF_3	IO_L23P_3/VREF_3	IO_L23P_3/VREF_3	U21	VREF
3	IO_L24N_3	IO_L24N_3	IO_L24N_3	IO_L24N_3	IO_L24N_3	U24	I/O
3	IO_L24P_3	IO_L24P_3	IO_L24P_3	IO_L24P_3	IO_L24P_3	U23	I/O
3	IO_L26N_3	IO_L26N_3	IO_L26N_3	IO_L26N_3	IO_L26N_3	U26	I/O
3	IO_L26P_3	IO_L26P_3	IO_L26P_3	IO_L26P_3	IO_L26P_3	U25	I/O
3	IO_L27N_3	IO_L27N_3	IO_L27N_3	IO_L27N_3	IO_L27N_3	T20	I/O
3	IO_L27P_3	IO_L27P_3	IO_L27P_3	IO_L27P_3	IO_L27P_3	T19	I/O
3	IO_L28N_3	IO_L28N_3	IO_L28N_3	IO_L28N_3	IO_L28N_3	T22	I/O
3	IO_L28P_3	IO_L28P_3	IO_L28P_3	IO_L28P_3	IO_L28P_3	T21	I/O
3	IO_L29N_3	IO_L29N_3	IO_L29N_3	IO_L29N_3	IO_L29N_3	T26	I/O
3	IO_L29P_3	IO_L29P_3	IO_L29P_3	IO_L29P_3	IO_L29P_3	T25	I/O
3	IO_L31N_3	IO_L31N_3	IO_L31N_3	IO_L31N_3	IO_L31N_3	R20	I/O
3	IO_L31P_3	IO_L31P_3	IO_L31P_3	IO_L31P_3	IO_L31P_3	R19	I/O
3	IO_L32N_3	IO_L32N_3	IO_L32N_3	IO_L32N_3	IO_L32N_3	R22	I/O
3	IO_L32P_3	IO_L32P_3	IO_L32P_3	IO_L32P_3	IO_L32P_3	R21	I/O
3	IO_L33N_3	IO_L33N_3	IO_L33N_3	IO_L33N_3	IO_L33N_3	R24	I/O
3	IO_L33P_3	IO_L33P_3	IO_L33P_3	IO_L33P_3	IO_L33P_3	T23	I/O
3	IO_L34N_3	IO_L34N_3	IO_L34N_3	IO_L34N_3	IO_L34N_3	R26	I/O
3	IO_L34P_3/VREF_3	IO_L34P_3/VREF_3	IO_L34P_3/VREF_3	IO_L34P_3/VREF_3	IO_L34P_3/VREF_3	R25	VREF
3	IO_L35N_3	IO_L35N_3	IO_L35N_3	IO_L35N_3	IO_L35N_3	P20	I/O
3	IO_L35P_3	IO_L35P_3	IO_L35P_3	IO_L35P_3	IO_L35P_3	P19	I/O
3	IO_L38N_3	IO_L38N_3	IO_L38N_3	IO_L38N_3	IO_L38N_3	P22	I/O
3	IO_L38P_3	IO_L38P_3	IO_L38P_3	IO_L38P_3	IO_L38P_3	P21	I/O
3	IO_L39N_3	IO_L39N_3	IO_L39N_3	IO_L39N_3	IO_L39N_3	P24	I/O
3	IO_L39P_3	IO_L39P_3	IO_L39P_3	IO_L39P_3	IO_L39P_3	P23	I/O
3	IO_L40N_3/VREF_3	IO_L40N_3/VREF_3	IO_L40N_3/VREF_3	IO_L40N_3/VREF_3	IO_L40N_3/VREF_3	P26	VREF
3	IO_L40P_3	IO_L40P_3	IO_L40P_3	IO_L40P_3	IO_L40P_3	P25	I/O
3	VCCO_3	VCCO_3	VCCO_3	VCCO_3	VCCO_3	P17	VCCO
3	VCCO_3	VCCO_3	VCCO_3	VCCO_3	VCCO_3	P18	VCCO
3	VCCO_3	VCCO_3	VCCO_3	VCCO_3	VCCO_3	R18	VCCO
3	VCCO_3	VCCO_3	VCCO_3	VCCO_3	VCCO_3	T18	VCCO
3	VCCO_3	VCCO_3	VCCO_3	VCCO_3	VCCO_3	T24	VCCO
3	VCCO_3	VCCO_3	VCCO_3	VCCO_3	VCCO_3	U19	VCCO
3	VCCO_3	VCCO_3	VCCO_3	VCCO_3	VCCO_3	V19	VCCO

Table 103: **FG676 Package Pinout *(Cont'd)***

Bank	XC3S1000 Pin Name	XC3S1500 Pin Name	XC3S2000 Pin Name	XC3S4000 Pin Name	XC3S5000 Pin Name	FG676 Pin Number	Type
3	VCCO_3	VCCO_3	VCCO_3	VCCO_3	VCCO_3	Y24	VCCO
4	IO	IO	IO	IO	IO	AA20	I/O
4	IO	IO	IO	IO	IO	AD15	I/O
4	N.C. (◆)	IO	IO	IO	IO	AD19	I/O
4	IO	IO	IO	IO	IO	AD23	I/O
4	IO	IO	IO	IO	IO	AF21	I/O
4	IO	IO	IO	IO	IO	AF22	I/O
4	IO	IO	IO	IO	IO	W15	I/O
4	IO	IO	IO	IO	IO	W16	I/O
4	IO/VREF_4	IO/VREF_4	IO/VREF_4	IO/VREF_4	IO/VREF_4	AB14	VREF
4	IO/VREF_4	IO/VREF_4	IO/VREF_4	IO/VREF_4	IO/VREF_4	AD25	VREF
4	IO/VREF_4	IO/VREF_4	IO/VREF_4	IO/VREF_4	IO/VREF_4	Y17	VREF
4	IO_L01N_4/VRP_4	IO_L01N_4/VRP_4	IO_L01N_4/VRP_4	IO_L01N_4/VRP_4	IO_L01N_4/VRP_4	AB22	DCI
4	IO_L01P_4/VRN_4	IO_L01P_4/VRN_4	IO_L01P_4/VRN_4	IO_L01P_4/VRN_4	IO_L01P_4/VRN_4	AC22	DCI
4	IO_L04N_4	IO_L04N_4	IO_L04N_4	IO_L04N_4	IO_L04N_4	AE24	I/O
4	IO_L04P_4	IO_L04P_4	IO_L04P_4	IO_L04P_4	IO_L04P_4	AF24	I/O
4	IO_L05N_4	IO_L05N_4	IO_L05N_4	IO_L05N_4	IO_L05N_4	AE23	I/O
4	IO_L05P_4	IO_L05P_4	IO_L05P_4	IO_L05P_4	IO_L05P_4	AF23	I/O
4	IO_L06N_4/VREF_4	IO_L06N_4/VREF_4	IO_L06N_4/VREF_4	IO_L06N_4/VREF_4	IO_L06N_4/VREF_4	AD22	VREF
4	IO_L06P_4	IO_L06P_4	IO_L06P_4	IO_L06P_4	IO_L06P_4	AE22	I/O
4	IO_L07N_4	IO_L07N_4	IO_L07N_4	IO_L07N_4	IO_L07N_4	AB21	I/O
4	IO_L07P_4	IO_L07P_4	IO_L07P_4	IO_L07P_4	IO_L07P_4	AC21	I/O
4	IO_L08N_4	IO_L08N_4	IO_L08N_4	IO_L08N_4	IO_L08N_4	AD21	I/O
4	IO_L08P_4	IO_L08P_4	IO_L08P_4	IO_L08P_4	IO_L08P_4	AE21	I/O
4	IO_L09N_4	IO_L09N_4	IO_L09N_4	IO_L09N_4	IO_L09N_4	AB20	I/O
4	IO_L09P_4	IO_L09P_4	IO_L09P_4	IO_L09P_4	IO_L09P_4	AC20	I/O
4	IO_L10N_4	IO_L10N_4	IO_L10N_4	IO_L10N_4	IO_L10N_4	AE20	I/O
4	IO_L10P_4	IO_L10P_4	IO_L10P_4	IO_L10P_4	IO_L10P_4	AF20	I/O
4	N.C. (◆)	IO_L11N_4	IO_L11N_4	IO_L11N_4	IO_L11N_4	Y19	I/O
4	N.C. (◆)	IO_L11P_4	IO_L11P_4	IO_L11P_4	IO_L11P_4	AA19	I/O
4	N.C. (◆)	IO_L12N_4	IO_L12N_4	IO_L12N_4	IO_L12N_4	AB19	I/O
4	N.C. (◆)	IO_L12P_4	IO_L12P_4	IO_L12P_4	IO_L12P_4	AC19	I/O
4	IO_L15N_4	IO_L15N_4	IO_L15N_4	IO_L15N_4	IO_L15N_4	AE19	I/O
4	IO_L15P_4	IO_L15P_4	IO_L15P_4	IO_L15P_4	IO_L15P_4	AF19	I/O
4	IO_L16N_4	IO_L16N_4	IO_L16N_4	IO_L16N_4	IO_L16N_4	Y18	I/O
4	IO_L16P_4	IO_L16P_4	IO_L16P_4	IO_L16P_4	IO_L16P_4	AA18	I/O
4	N.C. (◆)	IO_L17N_4	IO_L17N_4	IO_L17N_4	IO_L17N_4	AB18	I/O
4	N.C. (◆)	IO_L17P_4	IO_L17P_4	IO_L17P_4	IO_L17P_4	AC18	I/O
4	N.C. (◆)	IO_L18N_4	IO_L18N_4	IO_L18N_4	IO_L18N_4	AD18	I/O
4	N.C. (◆)	IO_L18P_4	IO_L18P_4	IO_L18P_4	IO_L18P_4	AE18	I/O
4	IO_L19N_4	IO_L19N_4	IO_L19N_4	IO_L19N_4	IO_L19N_4	AC17	I/O
4	IO_L19P_4	IO_L19P_4	IO_L19P_4	IO_L19P_4	IO_L19P_4	AA17	I/O

Table 103: **FG676 Package Pinout *(Cont'd)***

Bank	XC3S1000 Pin Name	XC3S1500 Pin Name	XC3S2000 Pin Name	XC3S4000 Pin Name	XC3S5000 Pin Name	FG676 Pin Number	Type
4	IO_L22N_4/VREF_4	IO_L22N_4/VREF_4	IO_L22N_4/VREF_4	IO_L22N_4/VREF_4	IO_L22N_4/VREF_4	AD17	VREF
4	IO_L22P_4	IO_L22P_4	IO_L22P_4	IO_L22P_4	IO_L22P_4	AB17	I/O
4	N.C. (◆)	IO_L23N_4	IO_L23N_4	IO_L23N_4	IO_L23N_4	AE17	I/O
4	N.C. (◆)	IO_L23P_4	IO_L23P_4	IO_L23P_4	IO_L23P_4	AF17	I/O
4	IO_L24N_4	IO_L24N_4	IO_L24N_4	IO_L24N_4	IO_L24N_4	Y16	I/O
4	IO_L24P_4	IO_L24P_4	IO_L24P_4	IO_L24P_4	IO_L24P_4	AA16	I/O
4	IO_L25N_4	IO_L25N_4	IO_L25N_4	IO_L25N_4	IO_L25N_4	AB16	I/O
4	IO_L25P_4	IO_L25P_4	IO_L25P_4	IO_L25P_4	IO_L25P_4	AC16	I/O
4	N.C. (◆)	IO_L26N_4	IO_L26N_4	IO_L26N_4	IO_L26N_4	AE16	I/O
4	N.C. (◆)	IO_L26P_4/VREF_4	IO_L26P_4/VREF_4	IO_L26P_4/VREF_4	IO_L26P_4/VREF_4	AF16	VREF
4	IO_L27N_4/DIN/D0	IO_L27N_4/DIN/D0	IO_L27N_4/DIN/D0	IO_L27N_4/DIN/D0	IO_L27N_4/DIN/D0	Y15	DUAL
4	IO_L27P_4/D1	IO_L27P_4/D1	IO_L27P_4/D1	IO_L27P_4/D1	IO_L27P_4/D1	W14	DUAL
4	IO_L28N_4	IO_L28N_4	IO_L28N_4	IO_L28N_4	IO_L28N_4	AA15	I/O
4	IO_L28P_4	IO_L28P_4	IO_L28P_4	IO_L28P_4	IO_L28P_4	AB15	I/O
4	IO_L29N_4	IO_L29N_4	IO_L29N_4	IO_L29N_4	IO_L29N_4	AE15	I/O
4	IO_L29P_4	IO_L29P_4	IO_L29P_4	IO_L29P_4	IO_L29P_4	AF15	I/O
4	IO_L30N_4/D2	IO_L30N_4/D2	IO_L30N_4/D2	IO_L30N_4/D2	IO_L30N_4/D2	Y14	DUAL
4	IO_L30P_4/D3	IO_L30P_4/D3	IO_L30P_4/D3	IO_L30P_4/D3	IO_L30P_4/D3	AA14	DUAL
4	IO_L31N_4/INIT_B	IO_L31N_4/INIT_B	IO_L31N_4/INIT_B	IO_L31N_4/INIT_B	IO_L31N_4/INIT_B	AC14	DUAL
4	IO_L31P_4/ DOUT/BUSY	IO_L31P_4/ DOUT/BUSY	IO_L31P_4/ DOUT/BUSY	IO_L31P_4/ DOUT/BUSY	IO_L31P_4/ DOUT/BUSY	AD14	DUAL
4	IO_L32N_4/GCLK1	IO_L32N_4/GCLK1	IO_L32N_4/GCLK1	IO_L32N_4/GCLK1	IO_L32N_4/GCLK1	AE14	GCLK
4	IO_L32P_4/GCLK0	IO_L32P_4/GCLK0	IO_L32P_4/GCLK0	IO_L32P_4/GCLK0	IO_L32P_4/GCLK0	AF14	GCLK
4	VCCO_4	VCCO_4	VCCO_4	VCCO_4	VCCO_4	AD16	VCCO
4	VCCO_4	VCCO_4	VCCO_4	VCCO_4	VCCO_4	AD20	VCCO
4	VCCO_4	VCCO_4	VCCO_4	VCCO_4	VCCO_4	U14	VCCO
4	VCCO_4	VCCO_4	VCCO_4	VCCO_4	VCCO_4	V14	VCCO
4	VCCO_4	VCCO_4	VCCO_4	VCCO_4	VCCO_4	V15	VCCO
4	VCCO_4	VCCO_4	VCCO_4	VCCO_4	VCCO_4	V16	VCCO
4	VCCO_4	VCCO_4	VCCO_4	VCCO_4	VCCO_4	W17	VCCO
4	VCCO_4	VCCO_4	VCCO_4	VCCO_4	VCCO_4	W18	VCCO
5	IO	IO	IO	IO	IO	AA7	I/O
5	IO	IO	IO	IO	IO	AA13	I/O
5	IO	IO	IO	IO	IO_L17P_5(3)	AB9	I/O
5	N.C. (◆)	IO	IO	IO	IO_L17N_5(3)	AC9	I/O
5	IO	IO	IO	IO	IO	AC11	I/O
5	IO	IO	IO	IO	IO	AD10	I/O
5	IO	IO	IO	IO	IO	AD12	I/O
5	IO	IO	IO	IO	IO	AF4	I/O
5	IO	IO	IO	IO	IO	Y8	I/O
5	IO/VREF_5	IO/VREF_5	IO/VREF_5	IO/VREF_5	IO/VREF_5	AF5	VREF
5	IO/VREF_5	IO/VREF_5	IO/VREF_5	IO/VREF_5	IO/VREF_5	AF13	VREF
5	IO_L01N_5/RDWR_B	IO_L01N_5/RDWR_B	IO_L01N_5/RDWR_B	IO_L01N_5/RDWR_B	IO_L01N_5/RDWR_B	AC5	DUAL

Table 103: **FG676 Package Pinout *(Cont'd)***

Bank	XC3S1000 Pin Name	XC3S1500 Pin Name	XC3S2000 Pin Name	XC3S4000 Pin Name	XC3S5000 Pin Name	FG676 Pin Number	Type
5	IO_L01P_5/CS_B	IO_L01P_5/CS_B	IO_L01P_5/CS_B	IO_L01P_5/CS_B	IO_L01P_5/CS_B	AB5	DUAL
5	IO_L04N_5	IO_L04N_5	IO_L04N_5	IO_L04N_5	IO_L04N_5	AE4	I/O
5	IO_L04P_5	IO_L04P_5	IO_L04P_5	IO_L04P_5	IO_L04P_5	AD4	I/O
5	IO_L05N_5	IO_L05N_5	IO_L05N_5	IO_L05N_5	IO_L05N_5	AB6	I/O
5	IO_L05P_5	IO_L05P_5	IO_L05P_5	IO_L05P_5	IO_L05P_5	AA6	I/O
5	IO_L06N_5	IO_L06N_5	IO_L06N_5	IO_L06N_5	IO_L06N_5	AE5	I/O
5	IO_L06P_5	IO_L06P_5	IO_L06P_5	IO_L06P_5	IO_L06P_5	AD5	I/O
5	IO_L07N_5	IO_L07N_5	IO_L07N_5	IO_L07N_5	IO_L07N_5	AD6	I/O
5	IO_L07P_5	IO_L07P_5	IO_L07P_5	IO_L07P_5	IO_L07P_5	AC6	I/O
5	IO_L08N_5	IO_L08N_5	IO_L08N_5	IO_L08N_5	IO_L08N_5	AF6	I/O
5	IO_L08P_5	IO_L08P_5	IO_L08P_5	IO_L08P_5	IO_L08P_5	AE6	I/O
5	IO_L09N_5	IO_L09N_5	IO_L09N_5	IO_L09N_5	IO_L09N_5	AC7	I/O
5	IO_L09P_5	IO_L09P_5	IO_L09P_5	IO_L09P_5	IO_L09P_5	AB7	I/O
5	IO_L10N_5/VRP_5	IO_L10N_5/VRP_5	IO_L10N_5/VRP_5	IO_L10N_5/VRP_5	IO_L10N_5/VRP_5	AF7	DCI
5	IO_L10P_5/VRN_5	IO_L10P_5/VRN_5	IO_L10P_5/VRN_5	IO_L10P_5/VRN_5	IO_L10P_5/VRN_5	AE7	DCI
5	N.C. (◆)	IO_L11N_5/VREF_5	IO_L11N_5/VREF_5	IO_L11N_5/VREF_5	IO_L11N_5/VREF_5	AB8	VREF
5	N.C. (◆)	IO_L11P_5	IO_L11P_5	IO_L11P_5	IO_L11P_5	AA8	I/O
5	N.C. (◆)	IO_L12N_5	IO_L12N_5	IO_L12N_5	IO_L12N_5	AD8	I/O
5	N.C. (◆)	IO_L12P_5	IO_L12P_5	IO_L12P_5	IO_L12P_5	AC8	I/O
5	IO_L15N_5	IO_L15N_5	IO_L15N_5	IO_L15N_5	IO_L15N_5	AF8	I/O
5	IO_L15P_5	IO_L15P_5	IO_L15P_5	IO_L15P_5	IO_L15P_5	AE8	I/O
5	IO_L16N_5	IO_L16N_5	IO_L16N_5	IO_L16N_5	IO_L16N_5	AA9	I/O
5	IO_L16P_5	IO_L16P_5	IO_L16P_5	IO_L16P_5	IO_L16P_5	Y9	I/O
5	N.C. (◆)	IO_L18N_5	IO_L18N_5	IO_L18N_5	IO_L18N_5	AE9	I/O
5	N.C. (◆)	IO_L18P_5	IO_L18P_5	IO_L18P_5	IO_L18P_5	AD9	I/O
5	IO_L19N_5	IO_L19N_5	IO_L19N_5	IO_L19N_5	IO_L19N_5	AA10	I/O
5	IO_L19P_5/VREF_5	IO_L19P_5/VREF_5	IO_L19P_5/VREF_5	IO_L19P_5/VREF_5	IO_L19P_5/VREF_5	Y10	VREF
5	IO_L22N_5	IO_L22N_5	IO_L22N_5	IO_L22N_5	IO_L22N_5	AC10	I/O
5	IO_L22P_5	IO_L22P_5	IO_L22P_5	IO_L22P_5	IO_L22P_5	AB10	I/O
5	N.C. (◆)	IO_L23N_5	IO_L23N_5	IO_L23N_5	IO_L23N_5	AF10	I/O
5	N.C. (◆)	IO_L23P_5	IO_L23P_5	IO_L23P_5	IO_L23P_5	AE10	I/O
5	IO_L24N_5	IO_L24N_5	IO_L24N_5	IO_L24N_5	IO_L24N_5	Y11	I/O
5	IO_L24P_5	IO_L24P_5	IO_L24P_5	IO_L24P_5	IO_L24P_5	W11	I/O
5	IO_L25N_5	IO_L25N_5	IO_L25N_5	IO_L25N_5	IO_L25N_5	AB11	I/O
5	IO_L25P_5	IO_L25P_5	IO_L25P_5	IO_L25P_5	IO_L25P_5	AA11	I/O
5	N.C. (◆)	IO_L26N_5	IO_L26N_5	IO_L26N_5	IO_L26N_5	AF11	I/O
5	N.C. (◆)	IO_L26P_5	IO_L26P_5	IO_L26P_5	IO_L26P_5	AE11	I/O
5	IO_L27N_5/VREF_5	IO_L27N_5/VREF_5	IO_L27N_5/VREF_5	IO_L27N_5/VREF_5	IO_L27N_5/VREF_5	Y12	VREF
5	IO_L27P_5	IO_L27P_5	IO_L27P_5	IO_L27P_5	IO_L27P_5	W12	I/O
5	IO_L28N_5/D6	IO_L28N_5/D6	IO_L28N_5/D6	IO_L28N_5/D6	IO_L28N_5/D6	AB12	DUAL
5	IO_L28P_5/D7	IO_L28P_5/D7	IO_L28P_5/D7	IO_L28P_5/D7	IO_L28P_5/D7	AA12	DUAL
5	IO_L29N_5	IO_L29N_5	IO_L29N_5	IO_L29N_5	IO_L29N_5	AF12	I/O

Table 103: **FG676 Package Pinout *(Cont'd)***

Bank	XC3S1000 Pin Name	XC3S1500 Pin Name	XC3S2000 Pin Name	XC3S4000 Pin Name	XC3S5000 Pin Name	FG676 Pin Number	Type
5	IO_L29P_5/VREF_5	IO_L29P_5/VREF_5	IO_L29P_5/VREF_5	IO_L29P_5/VREF_5	IO_L29P_5/VREF_5	AE12	VREF
5	IO_L30N_5	IO_L30N_5	IO_L30N_5	IO_L30N_5	IO_L30N_5	Y13	I/O
5	IO_L30P_5	IO_L30P_5	IO_L30P_5	IO_L30P_5	IO_L30P_5	W13	I/O
5	IO_L31N_5/D4	IO_L31N_5/D4	IO_L31N_5/D4	IO_L31N_5/D4	IO_L31N_5/D4	AC13	DUAL
5	IO_L31P_5/D5	IO_L31P_5/D5	IO_L31P_5/D5	IO_L31P_5/D5	IO_L31P_5/D5	AB13	DUAL
5	IO_L32N_5/GCLK3	IO_L32N_5/GCLK3	IO_L32N_5/GCLK3	IO_L32N_5/GCLK3	IO_L32N_5/GCLK3	AE13	GCLK
5	IO_L32P_5/GCLK2	IO_L32P_5/GCLK2	IO_L32P_5/GCLK2	IO_L32P_5/GCLK2	IO_L32P_5/GCLK2	AD13	GCLK
5	VCCO_5	VCCO_5	VCCO_5	VCCO_5	VCCO_5	AD7	VCCO
5	VCCO_5	VCCO_5	VCCO_5	VCCO_5	VCCO_5	AD11	VCCO
5	VCCO_5	VCCO_5	VCCO_5	VCCO_5	VCCO_5	U13	VCCO
5	VCCO_5	VCCO_5	VCCO_5	VCCO_5	VCCO_5	V11	VCCO
5	VCCO_5	VCCO_5	VCCO_5	VCCO_5	VCCO_5	V12	VCCO
5	VCCO_5	VCCO_5	VCCO_5	VCCO_5	VCCO_5	V13	VCCO
5	VCCO_5	VCCO_5	VCCO_5	VCCO_5	VCCO_5	W9	VCCO
5	VCCO_5	VCCO_5	VCCO_5	VCCO_5	VCCO_5	W10	VCCO
6	N.C. (◆)	N.C. (■)	IO	IO	IO	AA5	I/O
6	IO_L01N_6/VRP_6	IO_L01N_6/VRP_6	IO_L01N_6/VRP_6	IO_L01N_6/VRP_6	IO_L01N_6/VRP_6	AD2	DCI
6	IO_L01P_6/VRN_6	IO_L01P_6/VRN_6	IO_L01P_6/VRN_6	IO_L01P_6/VRN_6	IO_L01P_6/VRN_6	AD1	DCI
6	IO_L02N_6	IO_L02N_6	IO_L02N_6	IO_L02N_6	IO_L02N_6	AB4	I/O
6	IO_L02P_6	IO_L02P_6	IO_L02P_6	IO_L02P_6	IO_L02P_6	AB3	I/O
6	IO_L03N_6/VREF_6	IO_L03N_6/VREF_6	IO_L03N_6/VREF_6	IO_L03N_6/VREF_6	IO_L03N_6/VREF_6	AC2	VREF
6	IO_L03P_6	IO_L03P_6	IO_L03P_6	IO_L03P_6	IO_L03P_6	AC1	I/O
6	N.C. (◆)	IO_L05N_6	IO_L05N_6	IO_L05N_6	IO_L05N_6	AB2	I/O
6	N.C. (◆)	IO_L05P_6	IO_L05P_6	IO_L05P_6	IO_L05P_6	AB1	I/O
6	N.C. (◆)	IO_L06N_6	IO_L06N_6	IO_L06N_6	IO_L06N_6	Y7	I/O
6	N.C. (◆)	IO_L06P_6	IO_L06P_6	IO_L06P_6	IO_L06P_6	Y6	I/O
6	N.C. (◆)	IO_L07N_6	IO_L07N_6	IO_L07N_6	IO_L07N_6	AA4	I/O
6	N.C. (◆)	IO_L07P_6	IO_L07P_6	IO_L07P_6	IO_L07P_6	AA3	I/O
6	N.C. (◆)	IO_L08N_6	IO_L08N_6	IO_L08N_6	IO_L08N_6	Y5	I/O
6	N.C. (◆)	IO_L08P_6	IO_L08P_6	IO_L08P_6	IO_L08P_6	Y4	I/O
6	N.C. (◆)	IO_L09N_6/VREF_6	IO_L09N_6/VREF_6	IO_L09N_6/VREF_6	IO_L09N_6/VREF_6	AA2	VREF
6	N.C. (◆)	IO_L09P_6	IO_L09P_6	IO_L09P_6	IO_L09P_6	AA1	I/O
6	N.C. (◆)	IO_L10N_6	IO_L10N_6	IO_L10N_6	IO_L10N_6	Y2	I/O
6	N.C. (◆)	IO_L10P_6	IO_L10P_6	IO_L10P_6	IO_L10P_6	Y1	I/O
6	IO_L14N_6	IO_L14N_6	IO_L14N_6	IO_L14N_6	IO_L14N_6	W7	I/O
6	IO_L14P_6	IO_L14P_6	IO_L14P_6	IO_L14P_6	IO_L14P_6	W6	I/O
6	IO_L16N_6	IO_L16N_6	IO_L16N_6	IO_L16N_6	IO_L16N_6	V6	I/O
6	IO_L16P_6	IO_L16P_6	IO_L16P_6	IO_L16P_6	IO_L16P_6	W5	I/O
6	IO_L17N_6	IO_L17N_6	IO_L17N_6	IO_L17N_6	IO_L17N_6	W4	I/O
6	IO_L17P_6/VREF_6	IO_L17P_6/VREF_6	IO_L17P_6/VREF_6	IO_L17P_6/VREF_6	IO_L17P_6/VREF_6	W3	VREF
6	IO_L19N_6	IO_L19N_6	IO_L19N_6	IO_L19N_6	IO_L19N_6	W2	I/O
6	IO_L19P_6	IO_L19P_6	IO_L19P_6	IO_L19P_6	IO_L19P_6	W1	I/O

Table 103: **FG676 Package Pinout *(Cont'd)***

Bank	XC3S1000 Pin Name	XC3S1500 Pin Name	XC3S2000 Pin Name	XC3S4000 Pin Name	XC3S5000 Pin Name	FG676 Pin Number	Type
6	IO_L20N_6	IO_L20N_6	IO_L20N_6	IO_L20N_6	IO_L20N_6	V7	I/O
6	IO_L20P_6	IO_L20P_6	IO_L20P_6	IO_L20P_6	IO_L20P_6	U7	I/O
6	IO_L21N_6	IO_L21N_6	IO_L21N_6	IO_L21N_6	IO_L21N_6	V5	I/O
6	IO_L21P_6	IO_L21P_6	IO_L21P_6	IO_L21P_6	IO_L21P_6	V4	I/O
6	IO_L22N_6	IO_L22N_6	IO_L22N_6	IO_L22N_6	IO_L22N_6	V3	I/O
6	IO_L22P_6	IO_L22P_6	IO_L22P_6	IO_L22P_6	IO_L22P_6	V2	I/O
6	IO_L23N_6	IO_L23N_6	IO_L23N_6	IO_L23N_6	IO_L23N_6	U6	I/O
6	IO_L23P_6	IO_L23P_6	IO_L23P_6	IO_L23P_6	IO_L23P_6	U5	I/O
6	IO_L24N_6/VREF_6	IO_L24N_6/VREF_6	IO_L24N_6/VREF_6	IO_L24N_6/VREF_6	IO_L24N_6/VREF_6	U4	VREF
6	IO_L24P_6	IO_L24P_6	IO_L24P_6	IO_L24P_6	IO_L24P_6	U3	I/O
6	IO_L26N_6	IO_L26N_6	IO_L26N_6	IO_L26N_6	IO_L26N_6	U2	I/O
6	IO_L26P_6	IO_L26P_6	IO_L26P_6	IO_L26P_6	IO_L26P_6	U1	I/O
6	IO_L27N_6	IO_L27N_6	IO_L27N_6	IO_L27N_6	IO_L27N_6	T8	I/O
6	IO_L27P_6	IO_L27P_6	IO_L27P_6	IO_L27P_6	IO_L27P_6	T7	I/O
6	IO_L28N_6	IO_L28N_6	IO_L28N_6	IO_L28N_6	IO_L28N_6	T6	I/O
6	IO_L28P_6	IO_L28P_6	IO_L28P_6	IO_L28P_6	IO_L28P_6	T5	I/O
6	IO_L29N_6	IO_L29N_6	IO_L29N_6	IO_L29N_6	IO_L29N_6	T2	I/O
6	IO_L29P_6	IO_L29P_6	IO_L29P_6	IO_L29P_6	IO_L29P_6	T1	I/O
6	IO_L31N_6	IO_L31N_6	IO_L31N_6	IO_L31N_6	IO_L31N_6	R8	I/O
6	IO_L31P_6	IO_L31P_6	IO_L31P_6	IO_L31P_6	IO_L31P_6	R7	I/O
6	IO_L32N_6	IO_L32N_6	IO_L32N_6	IO_L32N_6	IO_L32N_6	R6	I/O
6	IO_L32P_6	IO_L32P_6	IO_L32P_6	IO_L32P_6	IO_L32P_6	R5	I/O
6	IO_L33N_6	IO_L33N_6	IO_L33N_6	IO_L33N_6	IO_L33N_6	T4	I/O
6	IO_L33P_6	IO_L33P_6	IO_L33P_6	IO_L33P_6	IO_L33P_6	R3	I/O
6	IO_L34N_6/VREF_6	IO_L34N_6/VREF_6	IO_L34N_6/VREF_6	IO_L34N_6/VREF_6	IO_L34N_6/VREF_6	R2	VREF
6	IO_L34P_6	IO_L34P_6	IO_L34P_6	IO_L34P_6	IO_L34P_6	R1	I/O
6	IO_L35N_6	IO_L35N_6	IO_L35N_6	IO_L35N_6	IO_L35N_6	P8	I/O
6	IO_L35P_6	IO_L35P_6	IO_L35P_6	IO_L35P_6	IO_L35P_6	P7	I/O
6	IO_L38N_6	IO_L38N_6	IO_L38N_6	IO_L38N_6	IO_L38N_6	P6	I/O
6	IO_L38P_6	IO_L38P_6	IO_L38P_6	IO_L38P_6	IO_L38P_6	P5	I/O
6	IO_L39N_6	IO_L39N_6	IO_L39N_6	IO_L39N_6	IO_L39N_6	P4	I/O
6	IO_L39P_6	IO_L39P_6	IO_L39P_6	IO_L39P_6	IO_L39P_6	P3	I/O
6	IO_L40N_6	IO_L40N_6	IO_L40N_6	IO_L40N_6	IO_L40N_6	P2	I/O
6	IO_L40P_6/VREF_6	IO_L40P_6/VREF_6	IO_L40P_6/VREF_6	IO_L40P_6/VREF_6	IO_L40P_6/VREF_6	P1	VREF
6	VCCO_6	VCCO_6	VCCO_6	VCCO_6	VCCO_6	P9	VCCO
6	VCCO_6	VCCO_6	VCCO_6	VCCO_6	VCCO_6	P10	VCCO
6	VCCO_6	VCCO_6	VCCO_6	VCCO_6	VCCO_6	R9	VCCO
6	VCCO_6	VCCO_6	VCCO_6	VCCO_6	VCCO_6	T3	VCCO
6	VCCO_6	VCCO_6	VCCO_6	VCCO_6	VCCO_6	T9	VCCO
6	VCCO_6	VCCO_6	VCCO_6	VCCO_6	VCCO_6	U8	VCCO
6	VCCO_6	VCCO_6	VCCO_6	VCCO_6	VCCO_6	V8	VCCO
6	VCCO_6	VCCO_6	VCCO_6	VCCO_6	VCCO_6	Y3	VCCO
7	IO_L01N_7/VRP_7	IO_L01N_7/VRP_7	IO_L01N_7/VRP_7	IO_L01N_7/VRP_7	IO_L01N_7/VRP_7	F5	DCI

Table 103: **FG676 Package Pinout *(Cont'd)***

Bank	XC3S1000 Pin Name	XC3S1500 Pin Name	XC3S2000 Pin Name	XC3S4000 Pin Name	XC3S5000 Pin Name	FG676 Pin Number	Type
7	IO_L01P_7/VRN_7	IO_L01P_7/VRN_7	IO_L01P_7/VRN_7	IO_L01P_7/VRN_7	IO_L01P_7/VRN_7	F6	DCI
7	IO_L02N_7	IO_L02N_7	IO_L02N_7	IO_L02N_7	IO_L02N_7	E3	I/O
7	IO_L02P_7	IO_L02P_7	IO_L02P_7	IO_L02P_7	IO_L02P_7	E4	I/O
7	IO_L03N_7/VREF_7	IO_L03N_7/VREF_7	IO_L03N_7/VREF_7	IO_L03N_7/VREF_7	IO_L03N_7/VREF_7	D1	VREF
7	IO_L03P_7	IO_L03P_7	IO_L03P_7	IO_L03P_7	IO_L03P_7	D2	I/O
7	N.C. (◆)	IO_L05N_7	IO_L05N_7	IO_L05N_7	IO_L05N_7	G6	I/O
7	N.C. (◆)	IO_L05P_7	IO_L05P_7	IO_L05P_7	IO_L05P_7	G7	I/O
7	N.C. (◆)	IO_L06N_7	IO_L06N_7	IO_L06N_7	IO_L06N_7	E1	I/O
7	N.C. (◆)	IO_L06P_7	IO_L06P_7	IO_L06P_7	IO_L06P_7	E2	I/O
7	N.C. (◆)	IO_L07N_7	IO_L07N_7	IO_L07N_7	IO_L07N_7	F3	I/O
7	N.C. (◆)	IO_L07P_7	IO_L07P_7	IO_L07P_7	IO_L07P_7	F4	I/O
7	N.C. (◆)	IO_L08N_7	IO_L08N_7	IO_L08N_7	IO_L08N_7	G4	I/O
7	N.C. (◆)	IO_L08P_7	IO_L08P_7	IO_L08P_7	IO_L08P_7	G5	I/O
7	N.C. (◆)	IO_L09N_7	IO_L09N_7	IO_L09N_7	IO_L09N_7	F1	I/O
7	N.C. (◆)	IO_L09P_7	IO_L09P_7	IO_L09P_7	IO_L09P_7	F2	I/O
7	N.C. (◆)	IO_L10N_7	IO_L10N_7	IO_L10N_7	IO_L10N_7	H6	I/O
7	N.C. (◆)	IO_L10P_7/VREF_7	IO_L10P_7/VREF_7	IO_L10P_7/VREF_7	IO_L10P_7/VREF_7	H7	VREF
7	IO_L14N_7	IO_L14N_7	IO_L14N_7	IO_L14N_7	IO_L14N_7	G1	I/O
7	IO_L14P_7	IO_L14P_7	IO_L14P_7	IO_L14P_7	IO_L14P_7	G2	I/O
7	IO_L16N_7	IO_L16N_7	IO_L16N_7	IO_L16N_7	IO_L16N_7	J6	I/O
7	IO_L16P_7/VREF_7	IO_L16P_7/VREF_7	IO_L16P_7/VREF_7	IO_L16P_7/VREF_7	IO_L16P_7/VREF_7	H5	VREF
7	IO_L17N_7	IO_L17N_7	IO_L17N_7	IO_L17N_7	IO_L17N_7	H3	I/O
7	IO_L17P_7	IO_L17P_7	IO_L17P_7	IO_L17P_7	IO_L17P_7	H4	I/O
7	IO_L19N_7/VREF_7	IO_L19N_7/VREF_7	IO_L19N_7/VREF_7	IO_L19N_7/VREF_7	IO_L19N_7/VREF_7	H1	VREF
7	IO_L19P_7	IO_L19P_7	IO_L19P_7	IO_L19P_7	IO_L19P_7	H2	I/O
7	IO_L20N_7	IO_L20N_7	IO_L20N_7	IO_L20N_7	IO_L20N_7	K7	I/O
7	IO_L20P_7	IO_L20P_7	IO_L20P_7	IO_L20P_7	IO_L20P_7	J7	I/O
7	IO_L21N_7	IO_L21N_7	IO_L21N_7	IO_L21N_7	IO_L21N_7	J4	I/O
7	IO_L21P_7	IO_L21P_7	IO_L21P_7	IO_L21P_7	IO_L21P_7	J5	I/O
7	IO_L22N_7	IO_L22N_7	IO_L22N_7	IO_L22N_7	IO_L22N_7	J2	I/O
7	IO_L22P_7	IO_L22P_7	IO_L22P_7	IO_L22P_7	IO_L22P_7	J3	I/O
7	IO_L23N_7	IO_L23N_7	IO_L23N_7	IO_L23N_7	IO_L23N_7	K5	I/O
7	IO_L23P_7	IO_L23P_7	IO_L23P_7	IO_L23P_7	IO_L23P_7	K6	I/O
7	IO_L24N_7	IO_L24N_7	IO_L24N_7	IO_L24N_7	IO_L24N_7	K3	I/O
7	IO_L24P_7	IO_L24P_7	IO_L24P_7	IO_L24P_7	IO_L24P_7	K4	I/O
7	IO_L26N_7	IO_L26N_7	IO_L26N_7	IO_L26N_7	IO_L26N_7	K1	I/O
7	IO_L26P_7	IO_L26P_7	IO_L26P_7	IO_L26P_7	IO_L26P_7	K2	I/O
7	IO_L27N_7	IO_L27N_7	IO_L27N_7	IO_L27N_7	IO_L27N_7	L7	I/O
7	IO_L27P_7/VREF_7	IO_L27P_7/VREF_7	IO_L27P_7/VREF_7	IO_L27P_7/VREF_7	IO_L27P_7/VREF_7	L8	VREF
7	IO_L28N_7	IO_L28N_7	IO_L28N_7	IO_L28N_7	IO_L28N_7	L5	I/O
7	IO_L28P_7	IO_L28P_7	IO_L28P_7	IO_L28P_7	IO_L28P_7	L6	I/O
7	IO_L29N_7	IO_L29N_7	IO_L29N_7	IO_L29N_7	IO_L29N_7	L1	I/O

Table 103: **FG676 Package Pinout *(Cont'd)***

Bank	XC3S1000 Pin Name	XC3S1500 Pin Name	XC3S2000 Pin Name	XC3S4000 Pin Name	XC3S5000 Pin Name	FG676 Pin Number	Type
7	IO_L29P_7	IO_L29P_7	IO_L29P_7	IO_L29P_7	IO_L29P_7	L2	I/O
7	IO_L31N_7	IO_L31N_7	IO_L31N_7	IO_L31N_7	IO_L31N_7	M7	I/O
7	IO_L31P_7	IO_L31P_7	IO_L31P_7	IO_L31P_7	IO_L31P_7	M8	I/O
7	IO_L32N_7	IO_L32N_7	IO_L32N_7	IO_L32N_7	IO_L32N_7	M6	I/O
7	IO_L32P_7	IO_L32P_7	IO_L32P_7	IO_L32P_7	IO_L32P_7	M5	I/O
7	IO_L33N_7	IO_L33N_7	IO_L33N_7	IO_L33N_7	IO_L33N_7	M3	I/O
7	IO_L33P_7	IO_L33P_7	IO_L33P_7	IO_L33P_7	IO_L33P_7	L4	I/O
7	IO_L34N_7	IO_L34N_7	IO_L34N_7	IO_L34N_7	IO_L34N_7	M1	I/O
7	IO_L34P_7	IO_L34P_7	IO_L34P_7	IO_L34P_7	IO_L34P_7	M2	I/O
7	IO_L35N_7	IO_L35N_7	IO_L35N_7	IO_L35N_7	IO_L35N_7	N7	I/O
7	IO_L35P_7	IO_L35P_7	IO_L35P_7	IO_L35P_7	IO_L35P_7	N8	I/O
7	IO_L38N_7	IO_L38N_7	IO_L38N_7	IO_L38N_7	IO_L38N_7	N5	I/O
7	IO_L38P_7	IO_L38P_7	IO_L38P_7	IO_L38P_7	IO_L38P_7	N6	I/O
7	IO_L39N_7	IO_L39N_7	IO_L39N_7	IO_L39N_7	IO_L39N_7	N3	I/O
7	IO_L39P_7	IO_L39P_7	IO_L39P_7	IO_L39P_7	IO_L39P_7	N4	I/O
7	IO_L40N_7/VREF_7	IO_L40N_7/VREF_7	IO_L40N_7/VREF_7	IO_L40N_7/VREF_7	IO_L40N_7/VREF_7	N1	VREF
7	IO_L40P_7	IO_L40P_7	IO_L40P_7	IO_L40P_7	IO_L40P_7	N2	I/O
7	VCCO_7	VCCO_7	VCCO_7	VCCO_7	VCCO_7	G3	VCCO
7	VCCO_7	VCCO_7	VCCO_7	VCCO_7	VCCO_7	J8	VCCO
7	VCCO_7	VCCO_7	VCCO_7	VCCO_7	VCCO_7	K8	VCCO
7	VCCO_7	VCCO_7	VCCO_7	VCCO_7	VCCO_7	L3	VCCO
7	VCCO_7	VCCO_7	VCCO_7	VCCO_7	VCCO_7	L9	VCCO
7	VCCO_7	VCCO_7	VCCO_7	VCCO_7	VCCO_7	M9	VCCO
7	VCCO_7	VCCO_7	VCCO_7	VCCO_7	VCCO_7	N9	VCCO
7	VCCO_7	VCCO_7	VCCO_7	VCCO_7	VCCO_7	N10	VCCO
N/A	GND	GND	GND	GND	GND	A1	GND
N/A	GND	GND	GND	GND	GND	A26	GND
N/A	GND	GND	GND	GND	GND	AC4	GND
N/A	GND	GND	GND	GND	GND	AC12	GND
N/A	GND	GND	GND	GND	GND	AC15	GND
N/A	GND	GND	GND	GND	GND	AC23	GND
N/A	GND	GND	GND	GND	GND	AD3	GND
N/A	GND	GND	GND	GND	GND	AD24	GND
N/A	GND	GND	GND	GND	GND	AE2	GND
N/A	GND	GND	GND	GND	GND	AE25	GND
N/A	GND	GND	GND	GND	GND	AF1	GND
N/A	GND	GND	GND	GND	GND	AF26	GND
N/A	GND	GND	GND	GND	GND	B2	GND
N/A	GND	GND	GND	GND	GND	B25	GND
N/A	GND	GND	GND	GND	GND	C3	GND
N/A	GND	GND	GND	GND	GND	C24	GND
N/A	GND	GND	GND	GND	GND	D4	GND
N/A	GND	GND	GND	GND	GND	D12	GND

Table 103: **FG676 Package Pinout *(Cont'd)***

Bank	XC3S1000 Pin Name	XC3S1500 Pin Name	XC3S2000 Pin Name	XC3S4000 Pin Name	XC3S5000 Pin Name	FG676 Pin Number	Type
N/A	GND	GND	GND	GND	GND	D15	GND
N/A	GND	GND	GND	GND	GND	D23	GND
N/A	GND	GND	GND	GND	GND	K11	GND
N/A	GND	GND	GND	GND	GND	K12	GND
N/A	GND	GND	GND	GND	GND	K15	GND
N/A	GND	GND	GND	GND	GND	K16	GND
N/A	GND	GND	GND	GND	GND	L10	GND
N/A	GND	GND	GND	GND	GND	L11	GND
N/A	GND	GND	GND	GND	GND	L12	GND
N/A	GND	GND	GND	GND	GND	L13	GND
N/A	GND	GND	GND	GND	GND	L14	GND
N/A	GND	GND	GND	GND	GND	L15	GND
N/A	GND	GND	GND	GND	GND	L16	GND
N/A	GND	GND	GND	GND	GND	L17	GND
N/A	GND	GND	GND	GND	GND	M4	GND
N/A	GND	GND	GND	GND	GND	M10	GND
N/A	GND	GND	GND	GND	GND	M11	GND
N/A	GND	GND	GND	GND	GND	M12	GND
N/A	GND	GND	GND	GND	GND	M13	GND
N/A	GND	GND	GND	GND	GND	M14	GND
N/A	GND	GND	GND	GND	GND	M15	GND
N/A	GND	GND	GND	GND	GND	M16	GND
N/A	GND	GND	GND	GND	GND	M17	GND
N/A	GND	GND	GND	GND	GND	M23	GND
N/A	GND	GND	GND	GND	GND	N11	GND
N/A	GND	GND	GND	GND	GND	N12	GND
N/A	GND	GND	GND	GND	GND	N13	GND
N/A	GND	GND	GND	GND	GND	N14	GND
N/A	GND	GND	GND	GND	GND	N15	GND
N/A	GND	GND	GND	GND	GND	N16	GND
N/A	GND	GND	GND	GND	GND	P11	GND
N/A	GND	GND	GND	GND	GND	P12	GND
N/A	GND	GND	GND	GND	GND	P13	GND
N/A	GND	GND	GND	GND	GND	P14	GND
N/A	GND	GND	GND	GND	GND	P15	GND
N/A	GND	GND	GND	GND	GND	P16	GND
N/A	GND	GND	GND	GND	GND	R4	GND
N/A	GND	GND	GND	GND	GND	R10	GND
N/A	GND	GND	GND	GND	GND	R11	GND
N/A	GND	GND	GND	GND	GND	R12	GND
N/A	GND	GND	GND	GND	GND	R13	GND
N/A	GND	GND	GND	GND	GND	R14	GND
N/A	GND	GND	GND	GND	GND	R15	GND

Table 103: **FG676 Package Pinout *(Cont'd)***

Bank	XC3S1000 Pin Name	XC3S1500 Pin Name	XC3S2000 Pin Name	XC3S4000 Pin Name	XC3S5000 Pin Name	FG676 Pin Number	Type
N/A	GND	GND	GND	GND	GND	R16	GND
N/A	GND	GND	GND	GND	GND	R17	GND
N/A	GND	GND	GND	GND	GND	R23	GND
N/A	GND	GND	GND	GND	GND	T10	GND
N/A	GND	GND	GND	GND	GND	T11	GND
N/A	GND	GND	GND	GND	GND	T12	GND
N/A	GND	GND	GND	GND	GND	T13	GND
N/A	GND	GND	GND	GND	GND	T14	GND
N/A	GND	GND	GND	GND	GND	T15	GND
N/A	GND	GND	GND	GND	GND	T16	GND
N/A	GND	GND	GND	GND	GND	T17	GND
N/A	GND	GND	GND	GND	GND	U11	GND
N/A	GND	GND	GND	GND	GND	U12	GND
N/A	GND	GND	GND	GND	GND	U15	GND
N/A	GND	GND	GND	GND	GND	U16	GND
N/A	VCCAUX	VCCAUX	VCCAUX	VCCAUX	VCCAUX	A2	VCCAUX
N/A	VCCAUX	VCCAUX	VCCAUX	VCCAUX	VCCAUX	A9	VCCAUX
N/A	VCCAUX	VCCAUX	VCCAUX	VCCAUX	VCCAUX	A18	VCCAUX
N/A	VCCAUX	VCCAUX	VCCAUX	VCCAUX	VCCAUX	A25	VCCAUX
N/A	VCCAUX	VCCAUX	VCCAUX	VCCAUX	VCCAUX	AE1	VCCAUX
N/A	VCCAUX	VCCAUX	VCCAUX	VCCAUX	VCCAUX	AE26	VCCAUX
N/A	VCCAUX	VCCAUX	VCCAUX	VCCAUX	VCCAUX	AF2	VCCAUX
N/A	VCCAUX	VCCAUX	VCCAUX	VCCAUX	VCCAUX	AF9	VCCAUX
N/A	VCCAUX	VCCAUX	VCCAUX	VCCAUX	VCCAUX	AF18	VCCAUX
N/A	VCCAUX	VCCAUX	VCCAUX	VCCAUX	VCCAUX	AF25	VCCAUX
N/A	VCCAUX	VCCAUX	VCCAUX	VCCAUX	VCCAUX	B1	VCCAUX
N/A	VCCAUX	VCCAUX	VCCAUX	VCCAUX	VCCAUX	B26	VCCAUX
N/A	VCCAUX	VCCAUX	VCCAUX	VCCAUX	VCCAUX	J1	VCCAUX
N/A	VCCAUX	VCCAUX	VCCAUX	VCCAUX	VCCAUX	J26	VCCAUX
N/A	VCCAUX	VCCAUX	VCCAUX	VCCAUX	VCCAUX	V1	VCCAUX
N/A	VCCAUX	VCCAUX	VCCAUX	VCCAUX	VCCAUX	V26	VCCAUX
N/A	VCCINT	VCCINT	VCCINT	VCCINT	VCCINT	H8	VCCINT
N/A	VCCINT	VCCINT	VCCINT	VCCINT	VCCINT	H19	VCCINT
N/A	VCCINT	VCCINT	VCCINT	VCCINT	VCCINT	J9	VCCINT
N/A	VCCINT	VCCINT	VCCINT	VCCINT	VCCINT	J10	VCCINT
N/A	VCCINT	VCCINT	VCCINT	VCCINT	VCCINT	J17	VCCINT
N/A	VCCINT	VCCINT	VCCINT	VCCINT	VCCINT	J18	VCCINT
N/A	VCCINT	VCCINT	VCCINT	VCCINT	VCCINT	K9	VCCINT
N/A	VCCINT	VCCINT	VCCINT	VCCINT	VCCINT	K10	VCCINT
N/A	VCCINT	VCCINT	VCCINT	VCCINT	VCCINT	K17	VCCINT
N/A	VCCINT	VCCINT	VCCINT	VCCINT	VCCINT	K18	VCCINT
N/A	VCCINT	VCCINT	VCCINT	VCCINT	VCCINT	U9	VCCINT
N/A	VCCINT	VCCINT	VCCINT	VCCINT	VCCINT	U10	VCCINT

Table 103: **FG676 Package Pinout *(Cont'd)***

Bank	XC3S1000 Pin Name	XC3S1500 Pin Name	XC3S2000 Pin Name	XC3S4000 Pin Name	XC3S5000 Pin Name	FG676 Pin Number	Type
N/A	VCCINT	VCCINT	VCCINT	VCCINT	VCCINT	U17	VCCINT
N/A	VCCINT	VCCINT	VCCINT	VCCINT	VCCINT	U18	VCCINT
N/A	VCCINT	VCCINT	VCCINT	VCCINT	VCCINT	V9	VCCINT
N/A	VCCINT	VCCINT	VCCINT	VCCINT	VCCINT	V10	VCCINT
N/A	VCCINT	VCCINT	VCCINT	VCCINT	VCCINT	V17	VCCINT
N/A	VCCINT	VCCINT	VCCINT	VCCINT	VCCINT	V18	VCCINT
N/A	VCCINT	VCCINT	VCCINT	VCCINT	VCCINT	W8	VCCINT
N/A	VCCINT	VCCINT	VCCINT	VCCINT	VCCINT	W19	VCCINT
VCC AUX	CCLK	CCLK	CCLK	CCLK	CCLK	AD26	CONFIG
VCC AUX	DONE	DONE	DONE	DONE	DONE	AC24	CONFIG
VCC AUX	HSWAP_EN	HSWAP_EN	HSWAP_EN	HSWAP_EN	HSWAP_EN	C2	CONFIG
VCC AUX	M0	M0	M0	M0	M0	AE3	CONFIG
VCC AUX	M1	M1	M1	M1	M1	AC3	CONFIG
VCC AUX	M2	M2	M2	M2	M2	AF3	CONFIG
VCC AUX	PROG_B	PROG_B	PROG_B	PROG_B	PROG_B	D3	CONFIG
VCC AUX	TCK	TCK	TCK	TCK	TCK	B24	JTAG
VCC AUX	TDI	TDI	TDI	TDI	TDI	C1	JTAG
VCC AUX	TDO	TDO	TDO	TDO	TDO	D24	JTAG
VCC AUX	TMS	TMS	TMS	TMS	TMS	A24	JTAG

Notes:
1. XC3S1500 balls D25 and F25 are not VREF pins although they are designated as such. If a design uses an IOSTANDARD requiring VREF in bank 2 then apply the workaround in Answer Record 20519.
2. XC3S4000 is pin compatible with XC3S2000 but uses alternate differential pair labeling on six package balls (H20, H21, H22, H23, H24, J21).
3. XC3S5000 is pin compatible with XC3S4000 but uses alternate differential pair functionality on fifteen package balls (A3, A8, B8, B18, C4, C8, C18, D8, D18, E8, E18, H23, H24, AB9, and AC9).

User I/Os by Bank

Table 104 indicates how the available user-I/O pins are distributed between the eight I/O banks for the XC3S1000 in the FG676 package. Similarly, Table 105 shows how the available user-I/O pins are distributed between the eight I/O banks for the XC3S1500 in the FG676 package. Finally, Table 106 shows the same information for the XC3S2000, XC3S4000, and XC3S5000 in the FG676 package.

Table 104: **User I/Os Per Bank for XC3S1000 in FG676 Package**

Edge	I/O Bank	Maximum I/O	All Possible I/O Pins by Type				
			I/O	DUAL	DCI	VREF	GCLK
Top	0	49	40	0	2	5	2
	1	50	41	0	2	5	2
Right	2	48	41	0	2	5	0
	3	48	41	0	2	5	0
Bottom	4	50	35	6	2	5	2
	5	50	35	6	2	5	2
Left	6	48	41	0	2	5	0
	7	48	41	0	2	5	0

Table 105: **User I/Os Per Bank for XC3S1500 in FG676 Package**

Edge	I/O Bank	Maximum I/O	All Possible I/O Pins by Type				
			I/O	DUAL	DCI	VREF	GCLK
Top	0	62	52	0	2	6	2
	1	61	51	0	2	6	2
Right	2	60	52	0	2	6	0
	3	60	52	0	2	6	0
Bottom	4	63	47	6	2	6	2
	5	61	45	6	2	6	2
Left	6	60	52	0	2	6	0
	7	60	52	0	2	6	0

Table 106: **User I/Os Per Bank for XC3S2000, XC3S4000, and XC3S5000 in FG676 Package**

Edge	I/O Bank	Maximum I/O	All Possible I/O Pins by Type				
			I/O	DUAL	DCI	VREF	GCLK
Top	0	62	52	0	2	6	2
	1	61	51	0	2	6	2
Right	2	61	53	0	2	6	0
	3	60	52	0	2	6	0
Bottom	4	63	47	6	2	6	2
	5	61	45	6	2	6	2
Left	6	61	53	0	2	6	0
	7	60	52	0	2	6	0

FG676 Footprint

Left Half of Package (Top View)

XC3S1000 (391 max. user I/O)

315 **I/O:** Unrestricted, general-purpose user I/O

40 **VREF:** User I/O or input voltage reference for bank

98 **N.C.:** Unconnected pins for XC3S1000 (◆)

XC3S1500 (487 max user I/O)

403 **I/O:** Unrestricted, general-purpose user I/O

48 **VREF:** User I/O or input voltage reference for bank

2 **N.C.:** Unconnected pins for XC3S1500 (■)

XC3S2000, XC3S4000, XC3S5000 (489 max user I/O)

405 **I/O:** Unrestricted, general-purpose user I/O

48 **VREF:** User I/O or input voltage reference for bank

0 **N.C.:** No unconnected pins

All devices

12 **DUAL:** Configuration pin, then possible user I/O

8 **GCLK:** User I/O or global clock buffer input

16 **DCI:** User I/O or reference resistor input for bank

7 **CONFIG:** Dedicated configuration pins

4 **JTAG:** Dedicated JTAG port pins

20 **VCCINT:** Internal core voltage supply (+1.2V)

64 **VCCO:** Output voltage supply for bank

16 **VCCAUX:** Auxiliary voltage supply (+2.5V)

76 **GND:** Ground

Bank 0

	1	2	3	4	5	6	7	8	9	10	11	12	13
A	GND	VCCAUX	I/O	I/O L05P_0 VREF_0	I/O	I/O	I/O L10P_0	I/O L15P_0	VCCAUX	I/O L23P_0 ◆	I/O L26P_0 VREF_0 ◆	I/O L29P_0	I/O L32P_0 GCLK6
B	VCCAUX	GND	I/O VREF_0	I/O L05N_0	I/O L06P_0	I/O L08P_0	I/O L10N_0	I/O L15N_0	I/O L18P_0 ◆	I/O L23N_0 ◆	I/O L26N_0 ◆	I/O L29N_0	I/O L32N_0 GCLK7
C	TDI	HSWAP_ EN	GND	I/O	I/O L06N_0	I/O L08N_0	VCCO_0	I/O ◆	I/O L18N_0 ◆	I/O L22P_0	VCCO_0	I/O	I/O L31P_0 VREF_0
D	I/O L03N_7 VREF_7	I/O L03P_7	PROG_B	GND	I/O L01P_0 VRN_0	I/O L07P_0	I/O L09P_0	I/O L12P_0 ◆	I/O L17P_0 ◆	I/O L22N_0	I/O L25P_0	GND	I/O L31N_0
E	I/O L06N_7 ◆	I/O L06P_7 ◆	I/O L02N_7	I/O L02P_7	I/O L01N_0 VRP_0	I/O L07N_0	I/O L09N_0	I/O L12N_0 ◆	I/O L17N_0 ◆	I/O L19P_0	I/O L25N_0	I/O L28P_0	I/O
F	I/O L09N_7 ◆	I/O L09P_7 ◆	I/O L07N_7 ◆	I/O L07P_7 ◆	I/O L01N_7 VRP_7	I/O L01P_7 VRN_7	I/O VREF_0	I/O L11P_0 ◆	I/O L16P_0	I/O L19N_0	I/O L24P_0	I/O L28N_0	I/O L30P_0
G	I/O L14N_7	I/O L14P_7	VCCO_7	I/O L08N_7 ◆	I/O L08P_7 ◆	I/O L05N_7 ◆	I/O L05P_7 ◆	I/O L11N_0 ◆	I/O L16N_0	I/O VREF_0	I/O L24N_0	I/O L27N_0	I/O L30N_0
H	I/O L19N_7 VREF_7	I/O L19P_7	I/O L17N_7	I/O L17P_7	I/O L16P_7 VREF_7	I/O L10N_7 ◆	I/O L10P_7 VREF_7 ◆	VCCINT	VCCO_0	VCCO_0	I/O	I/O	I/O L27P_0
J	VCCAUX	I/O L22N_7	I/O L22P_7	I/O L21N_7	I/O L21P_7	I/O L16N_7	I/O L20P_7	VCCO_7	VCCINT	VCCINT	VCCO_0	VCCO_0	VCCO_0
K	I/O L26N_7	I/O L26P_7	I/O L24N_7	I/O L24P_7	I/O L23N_7	I/O L23P_7	I/O L20N_7	VCCO_7	VCCINT	VCCINT	GND	GND	VCCO_0
L	I/O L29N_7	I/O L29P_7	VCCO_7	I/O L33P_7	I/O L28N_7	I/O L28P_7	I/O L27N_7	I/O L27P_7 VREF_7	VCCO_7	GND	GND	GND	GND
M	I/O L34N_7	I/O L34P_7	I/O L33N_7	GND	I/O L32P_7	I/O L32N_7	I/O L31N_7	I/O L31P_7	VCCO_7	GND	GND	GND	GND
N	I/O L40N_7 VREF_7	I/O L40P_7	I/O L39N_7	I/O L39P_7	I/O L38N_7	I/O L38P_7	I/O L35N_7	I/O L35P_7	VCCO_7	VCCO_7	GND	GND	GND
P	I/O L40P_6 VREF_6	I/O L40N_6	I/O L39P_6	I/O L39N_6	I/O L38P_6	I/O L38N_6	I/O L35P_6	I/O L35N_6	VCCO_6	VCCO_6	GND	GND	GND
R	I/O L34P_6	I/O L34N_6 VREF_6	I/O L33P_6	GND	I/O L32P_6	I/O L32N_6	I/O L31P_6	I/O L31N_6	VCCO_6	GND	GND	GND	GND
T	I/O L29P_6	I/O L29N_6	VCCO_6	I/O L33N_6	I/O L28P_6	I/O L28N_6	I/O L27P_6	I/O L27N_6	VCCO_6	GND	GND	GND	GND
U	I/O L26P_6	I/O L26N_6	I/O L24P_6	I/O L24N_6 VREF_6	I/O L23P_6	I/O L23N_6	I/O L20P_6	VCCO_6	VCCINT	VCCINT	GND	GND	VCCO_5
V	VCCAUX	I/O L22P_6	I/O L22N_6	I/O L21P_6	I/O L21N_6	I/O L16N_6	I/O L20N_6	VCCO_6	VCCINT	VCCINT	VCCO_5	VCCO_5	VCCO_5
W	I/O L19P_6	I/O L19N_6	I/O L17P_6 VREF_6	I/O L17N_6	I/O L16P_6	I/O L14P_6	I/O L14N_6	VCCINT	VCCO_5	VCCO_5	I/O L24P_5	I/O L27P_5	I/O L30P_5
Y	I/O L10P_6 ◆	I/O L10N_6 ◆	VCCO_6	I/O L08P_6 ◆	I/O L08N_6 ◆	I/O L06P_6 ◆	I/O L06N_6 ◆	I/O	I/O L16P_5	I/O L19P_5 VREF_5	I/O L24N_5	I/O L27N_5 VREF_5	I/O L30N_5
AA	I/O L09P_6 ◆	I/O L09N_6 VREF_6 ◆	I/O L07P_6 ◆	I/O L07N_6 ◆	I/O ◆■	I/O L05P_5	I/O	I/O L11P_5 ◆	I/O L16N_5	I/O L19N_5	I/O L25P_5	I/O L28P_5 D7	I/O
AB	I/O L05P_6 ◆	I/O L05N_6 ◆	I/O L02P_6	I/O L02N_6	I/O L01P_5 CS_B	I/O L05N_5	I/O L09P_5	I/O L11N_5 VREF_5 ◆	I/O	I/O L22P_5	I/O L25N_5	I/O L28N_5 D6	I/O L31P_5 D5
AC	I/O L03P_6	I/O L03N_6 VREF_6	M1	GND	I/O L01N_5 RDWR_B	I/O L07P_5	I/O L09N_5	I/O L12P_5 ◆	I/O ◆	I/O L22N_5	I/O	GND	I/O L31N_5 D4
AD	I/O L01P_6 VRN_6	I/O L01N_6 VRP_6	GND	I/O L04P_5	I/O L06P_5	I/O L07N_5	VCCO_5	I/O L12N_5 ◆	I/O L18P_5 ◆	I/O	VCCO_5	I/O	I/O L32P_5 GCLK2
AE	VCCAUX	GND	M0	I/O L04N_5	I/O L06N_5	I/O L08P_5	I/O L10P_5 VRN_5	I/O L15P_5	I/O L18N_5 ◆	I/O L23P_5 ◆	I/O L26P_5 ◆	I/O L29P_5 VREF_5	I/O L32N_5 GCLK3
AF	GND	VCCAUX	M2	I/O	I/O VREF_5	I/O L08N_5	I/O L10N_5 VRP_5	I/O L15N_5	VCCAUX	I/O L23N_5 ◆	I/O L26N_5 ◆	I/O L29N_5	I/O VREF_5

Bank 7

Bank 6

Bank 5

DS099-4 12a 030203

Figure 53: **FG676 Package Footprint (Top View)**

Right Half of Package (Top View)

	Bank 1													
	14	15	16	17	18	19	20	21	22	23	24	25	26	
	I/O	I/O L29N_1	I/O L26N_1 ◆	I/O L23N_1 ◆	VCCAUX	I/O L15N_1	I/O L10N_1 VREF_1	I/O L08N_1	I/O	I/O	TMS	VCCAUX	GND	A
	I/O L32N_1 GCLK5	I/O L29P_1	I/O L26P_1 ◆	I/O L23P_1 ◆	I/O L18N_1 ◆	I/O L15P_1	I/O L10P_1	I/O L08P_1	I/O L06N_1 VREF_1	I/O L04N_1	TCK	GND	VCCAUX	B
	I/O L32P_1 GCLK4	I/O VREF_1	VCCO_1	I/O VREF_1	I/O L18P_1 ◆	I/O L12N_1 ◆	VCCO_1	I/O L07N_1	I/O L06P_1	I/O L04P_1	GND	I/O L01N_2 VRP_2	I/O L01P_2 VRN_2	C
	I/O L31N_1 VREF_1	GND	I/O	I/O L22N_1	I/O VREF_1 ◆	I/O L12P_1 ◆	I/O L09N_1	I/O L07P_1	I/O L01N_1 VRP_1	GND	TDO	I/O L03N_2 VREF_2	I/O L03P_2	D
	I/O L31P_1	I/O L28N_1	I/O L25N_1	I/O L22P_1	I/O	I/O L11N_1 ◆	I/O L09P_1	I/O L05N_1	I/O L01P_1 VRN_1	I/O L02N_2	I/O L02P_2	I/O L05N_2 ◆	I/O L05P_2 ◆	E
	I/O	I/O L28P_1	I/O L25P_1	I/O L19N_1	I/O L16N_1	I/O L11P_1 ◆	I/O	I/O L05P_1	I/O ◆■	I/O L07N_2 ◆	I/O L07P_2 ◆	I/O L09N_2 VREF_2 ◆	I/O L09P_2 ◆	F
	I/O L30N_1	I/O L27N_1	I/O L24N_1	I/O L19P_1	I/O L16P_1	I/O	I/O L06N_2 ◆	I/O L06P_2 ◆	I/O L08N_2 ◆	I/O L08P_2 ◆	VCCO_2	I/O L10N_2 ◆	I/O L10P_2 ◆	G
	I/O L30P_1	I/O L27P_1	I/O L24P_1	VCCO_1	VCCO_1	VCCINT	I/O L14N_2 (L11N_2)	I/O L14P_2 (L11P_2)	I/O L16N_2 (L12N_2)	I/O L17N_2 (L13N_2)	I/O L17P_2 (L13P_2) VREF_2	I/O L19N_2	I/O L19P_2	H
	VCCO_1	VCCO_1	VCCO_1	VCCINT	VCCINT	VCCO_2	I/O L20N_2	I/O L16P_2 (L12P_2)	I/O L21N_2	I/O L21P_2	I/O L22N_2	I/O L22P_2	VCCAUX	J
	VCCO_1	GND	GND	VCCINT	VCCINT	VCCO_2	I/O L20P_2	I/O L23N_2 VREF_2	I/O L23P_2	I/O L24N_2	I/O L24P_2	I/O L26N_2	I/O L26P_2	K
	GND	GND	GND	GND	VCCO_2	I/O L27N_2	I/O L27P_2	I/O L28N_2	I/O L28P_2	I/O L33N_2	VCCO_2	I/O L29N_2	I/O L29P_2	L
	GND	GND	GND	GND	VCCO_2	I/O L31N_2	I/O L31P_2	I/O L32N_2	I/O L32P_2	GND	I/O L33P_2	I/O L34N_2 VREF_2	I/O L34P_2	M
	GND	GND	GND	VCCO_2	VCCO_2	I/O L35N_2	I/O L35P_2	I/O L38N_2	I/O L38P_2	I/O L39N_2	I/O L39P_2	I/O L40N_2	I/O L40P_2 VREF_2	N
	GND	GND	GND	VCCO_3	VCCO_3	I/O L35P_3	I/O L35N_3	I/O L38P_3	I/O L38N_3	I/O L39P_3	I/O L39N_3	I/O L40P_3	I/O L40N_3 VREF_3	P
	GND	GND	GND	GND	VCCO_3	I/O L31P_3	I/O L31N_3	I/O L32P_3	I/O L32N_3	GND	I/O L33N_3	I/O L34P_3 VREF_3	I/O L34N_3	R
	GND	GND	GND	GND	VCCO_3	I/O L27P_3	I/O L27N_3	I/O L28P_3	I/O L28N_3	I/O L33P_3	VCCO_3	I/O L29P_3	I/O L29N_3	T
	VCCO_4	GND	GND	VCCINT	VCCINT	VCCO_3	I/O L20N_3	I/O L23P_3 VREF_3	I/O L23N_3	I/O L24P_3	I/O L24N_3	I/O L26P_3	I/O L26N_3	U
	VCCO_4	VCCO_4	VCCO_4	VCCINT	VCCINT	VCCO_3	I/O L20P_3	I/O L16N_3	I/O L21P_3	I/O L21N_3	I/O L22P_3	I/O L22N_3	VCCAUX	V
	I/O L27P_4 D1	I/O	I/O	VCCO_4	VCCO_4	VCCINT	I/O L10P_3 ◆	I/O L10N_3 ◆	I/O L16P_3	I/O L17P_3 VREF_3	I/O L17N_3	I/O L19P_3	I/O L19N_3	W
	I/O L30N_4 D2	I/O L27N_4 DIN D0	I/O L24N_4	I/O VREF_4	I/O L16N_4	I/O L11N_4 ◆	I/O L05P_3 ◆	I/O L05N_3 ◆	I/O L08P_3 ◆	I/O L08N_3 ◆	VCCO_3	I/O L14P_3	I/O L14N_3	Y
	I/O L30P_4 D3	I/O L28N_4	I/O L24P_4	I/O L19P_4	I/O L16P_4	I/O L11P_4 ◆	I/O	I/O L01P_3 VRN_3	I/O L01N_3 VRP_3	I/O L07P_3 ◆	I/O L07N_3 ◆	I/O L09P_3 VREF_3 ◆	I/O L09N_3 ◆	AA
	IO VREF_4	I/O L28P_4	I/O L25N_4	I/O L22P_4	I/O L17N_4 ◆	I/O L12N_4 ◆	I/O L09N_4	I/O L07N_4	I/O L01N_4 VRP_4	I/O L02P_3	I/O L02N_3 VREF_3	I/O L06P_3 ◆	I/O L06N_3 ◆	AB
	I/O L31N_4 INIT_B	GND	I/O L25P_4	I/O L19N_4	I/O L17P_4 ◆	I/O L12P_4 ◆	I/O L09P_4	I/O L07P_4	I/O L01P_4 VRN_4	GND	DONE	I/O L03P_3	I/O L03N_3	AC
	I/O L31P_4 DOUT BUSY	I/O	VCCO_4	I/O L22N_4 VREF_4	I/O L18N_4 ◆	I/O ◆	VCCO_4	I/O L08N_4	I/O L06N_4 VREF_4	I/O	GND	I/O VREF_4	CCLK	AD
	I/O L32N_4 GCLK1	I/O L29N_4	I/O L26N_4 ◆	I/O L23N_4 ◆	I/O L18P_4 ◆	I/O L15N_4	I/O L10N_4	I/O L08P_4	I/O L06P_4	I/O L05N_4	I/O L04N_4	GND	VCCAUX	AE
	I/O L32P_4 GCLK0	I/O L29P_4	I/O L26P_4 VREF_4 ◆	I/O L23P_4 ◆	VCCAUX	I/O L15P_4	I/O L10P_4	I/O	I/O	I/O L05P_4	I/O L04P_4	VCCAUX	GND	AF
						Bank 4								

Bank 2

Bank 3

DS099-4_12b_011205

Notes:

1. Differential pair assignments shown in parentheses on balls H20, H21, H22, H23, H24, and J21 are for XC3S4000 only.
2. Differential pair assignments for the XC3S5000 are different on 15 balls (see Table 103 for details.)

Figure 54: FG676 Package Footprint (Top View) Continued

FG900: 900-lead Fine-pitch Ball Grid Array

The 900-lead fine-pitch ball grid array package, FG900, supports three different Spartan-3 devices, including the XC3S2000, the XC3S4000, and the XC3S5000. The footprints for the XC3S4000 and XC3S5000 are identical, as shown in Table 107 and Figure 55. The XC3S2000, however, has fewer I/O pins which consequently results in 68 unconnected pins on the FG900 package, labeled as "N.C." In Table 107 and Figure 55, these unconnected pins are indicated with a black diamond symbol (◆).

All the package pins appear in Table 107 and are sorted by bank number, then by pin name. Pairs of pins that form a differential I/O pair appear together in the table. The table also shows the pin number for each pin and the pin type, as defined earlier.

If there is a difference between the XC3S2000 pinout and the pinout for the XC3S4000 and XC3S5000, then that difference is highlighted in Table 107. If the table entry is shaded, then there is an unconnected pin on the XC3S2000 that maps to a user-I/O pin on the XC3S4000 and XC3S5000.

An electronic version of this package pinout table and footprint diagram is available for download from the Xilinx website at http://www.xilinx.com/support/documentation/data_ sheets/s3_pin.zip.

Pinout Table

Table 107: **FG900 Package Pinout**

Bank	XC3S2000 Pin Name	XC3S4000, XC3S5000 Pin Name	FG900 Pin Number	Type
0	IO	IO	E15	I/O
0	IO	IO	K15	I/O
0	IO	IO	D13	I/O
0	IO	IO	K13	I/O
0	IO	IO	G8	I/O
0	IO/VREF_0	IO/VREF_0	F9	VREF
0	IO/VREF_0	IO/VREF_0	C4	VREF
0	IO_L01N_0/VRP_0	IO_L01N_0/VRP_0	B4	DCI
0	IO_L01P_0/VRN_0	IO_L01P_0/VRN_0	A4	DCI
0	IO_L02N_0	IO_L02N_0	B5	I/O
0	IO_L02P_0	IO_L02P_0	A5	I/O
0	IO_L03N_0	IO_L03N_0	D5	I/O
0	IO_L03P_0	IO_L03P_0	E6	I/O
0	IO_L04N_0	IO_L04N_0	C6	I/O
0	IO_L04P_0	IO_L04P_0	B6	I/O
0	IO_L05N_0	IO_L05N_0	F6	I/O
0	IO_L05P_0/VREF_0	IO_L05P_0/VREF_0	F7	VREF
0	IO_L06N_0	IO_L06N_0	D7	I/O
0	IO_L06P_0	IO_L06P_0	C7	I/O
0	IO_L07N_0	IO_L07N_0	F8	I/O
0	IO_L07P_0	IO_L07P_0	E8	I/O
0	IO_L08N_0	IO_L08N_0	D8	I/O
0	IO_L08P_0	IO_L08P_0	C8	I/O
0	IO_L09N_0	IO_L09N_0	B8	I/O
0	IO_L09P_0	IO_L09P_0	A8	I/O

Table 107: **FG900 Package Pinout *(Cont'd)***

Bank	XC3S2000 Pin Name	XC3S4000, XC3S5000 Pin Name	FG900 Pin Number	Type
0	IO_L10N_0	IO_L10N_0	J9	I/O
0	IO_L10P_0	IO_L10P_0	H9	I/O
0	IO_L11N_0	IO_L11N_0	G10	I/O
0	IO_L11P_0	IO_L11P_0	F10	I/O
0	IO_L12N_0	IO_L12N_0	C10	I/O
0	IO_L12P_0	IO_L12P_0	B10	I/O
0	IO_L13N_0	IO_L13N_0	J10	I/O
0	IO_L13P_0	IO_L13P_0	K11	I/O
0	IO_L14N_0	IO_L14N_0	H11	I/O
0	IO_L14P_0	IO_L14P_0	G11	I/O
0	IO_L15N_0	IO_L15N_0	F11	I/O
0	IO_L15P_0	IO_L15P_0	E11	I/O
0	IO_L16N_0	IO_L16N_0	D11	I/O
0	IO_L16P_0	IO_L16P_0	C11	I/O
0	IO_L17N_0	IO_L17N_0	B11	I/O
0	IO_L17P_0	IO_L17P_0	A11	I/O
0	IO_L18N_0	IO_L18N_0	K12	I/O
0	IO_L18P_0	IO_L18P_0	J12	I/O
0	IO_L19N_0	IO_L19N_0	H12	I/O
0	IO_L19P_0	IO_L19P_0	G12	I/O
0	IO_L20N_0	IO_L20N_0	F12	I/O
0	IO_L20P_0	IO_L20P_0	E12	I/O
0	IO_L21N_0	IO_L21N_0	D12	I/O
0	IO_L21P_0	IO_L21P_0	C12	I/O
0	IO_L22N_0	IO_L22N_0	B12	I/O
0	IO_L22P_0	IO_L22P_0	A12	I/O
0	IO_L23N_0	IO_L23N_0	J13	I/O
0	IO_L23P_0	IO_L23P_0	H13	I/O
0	IO_L24N_0	IO_L24N_0	F13	I/O
0	IO_L24P_0	IO_L24P_0	E13	I/O
0	IO_L25N_0	IO_L25N_0	B13	I/O
0	IO_L25P_0	IO_L25P_0	A13	I/O
0	IO_L26N_0	IO_L26N_0	K14	I/O
0	IO_L26P_0/VREF_0	IO_L26P_0/VREF_0	J14	VREF
0	IO_L27N_0	IO_L27N_0	G14	I/O
0	IO_L27P_0	IO_L27P_0	F14	I/O
0	IO_L28N_0	IO_L28N_0	C14	I/O
0	IO_L28P_0	IO_L28P_0	B14	I/O
0	IO_L29N_0	IO_L29N_0	J15	I/O
0	IO_L29P_0	IO_L29P_0	H15	I/O

Table 107: **FG900 Package Pinout *(Cont'd)***

Bank	XC3S2000 Pin Name	XC3S4000, XC3S5000 Pin Name	FG900 Pin Number	Type
0	IO_L30N_0	IO_L30N_0	G15	I/O
0	IO_L30P_0	IO_L30P_0	F15	I/O
0	IO_L31N_0	IO_L31N_0	D15	I/O
0	IO_L31P_0/VREF_0	IO_L31P_0/VREF_0	C15	VREF
0	IO_L32N_0/GCLK7	IO_L32N_0/GCLK7	B15	GCLK
0	IO_L32P_0/GCLK6	IO_L32P_0/GCLK6	A15	GCLK
0	N.C. (◆)	IO_L35N_0	B7	I/O
0	N.C. (◆)	IO_L35P_0	A7	I/O
0	N.C. (◆)	IO_L36N_0	G7	I/O
0	N.C. (◆)	IO_L36P_0	H8	I/O
0	N.C. (◆)	IO_L37N_0	E9	I/O
0	N.C. (◆)	IO_L37P_0	D9	I/O
0	N.C. (◆)	IO_L38N_0	B9	I/O
0	N.C. (◆)	IO_L38P_0	A9	I/O
0	VCCO_0	VCCO_0	C5	VCCO
0	VCCO_0	VCCO_0	E7	VCCO
0	VCCO_0	VCCO_0	C9	VCCO
0	VCCO_0	VCCO_0	G9	VCCO
0	VCCO_0	VCCO_0	J11	VCCO
0	VCCO_0	VCCO_0	L12	VCCO
0	VCCO_0	VCCO_0	C13	VCCO
0	VCCO_0	VCCO_0	G13	VCCO
0	VCCO_0	VCCO_0	L13	VCCO
0	VCCO_0	VCCO_0	L14	VCCO
1	IO	IO	E25	I/O
1	IO	IO	J21	I/O
1	IO	IO	K20	I/O
1	IO	IO	F18	I/O
1	IO	IO	F16	I/O
1	IO	IO	A16	I/O
1	IO/VREF_1	IO/VREF_1	J17	VREF
1	IO_L01N_1/VRP_1	IO_L01N_1/VRP_1	A27	DCI
1	IO_L01P_1/VRN_1	IO_L01P_1/VRN_1	B27	DCI
1	IO_L02N_1	IO_L02N_1	D26	I/O
1	IO_L02P_1	IO_L02P_1	C27	I/O
1	IO_L03N_1	IO_L03N_1	A26	I/O
1	IO_L03P_1	IO_L03P_1	B26	I/O
1	IO_L04N_1	IO_L04N_1	B25	I/O
1	IO_L04P_1	IO_L04P_1	C25	I/O
1	IO_L05N_1	IO_L05N_1	F24	I/O

Table 107: **FG900 Package Pinout *(Cont'd)***

Bank	XC3S2000 Pin Name	XC3S4000, XC3S5000 Pin Name	FG900 Pin Number	Type
1	IO_L05P_1	IO_L05P_1	F25	I/O
1	IO_L06N_1/VREF_1	IO_L06N_1/VREF_1	C24	VREF
1	IO_L06P_1	IO_L06P_1	D24	I/O
1	IO_L07N_1	IO_L07N_1	A24	I/O
1	IO_L07P_1	IO_L07P_1	B24	I/O
1	IO_L08N_1	IO_L08N_1	H23	I/O
1	IO_L08P_1	IO_L08P_1	G24	I/O
1	IO_L09N_1	IO_L09N_1	F23	I/O
1	IO_L09P_1	IO_L09P_1	G23	I/O
1	IO_L10N_1/VREF_1	IO_L10N_1/VREF_1	C23	VREF
1	IO_L10P_1	IO_L10P_1	D23	I/O
1	IO_L11N_1	IO_L11N_1	A23	I/O
1	IO_L11P_1	IO_L11P_1	B23	I/O
1	IO_L12N_1	IO_L12N_1	H22	I/O
1	IO_L12P_1	IO_L12P_1	J22	I/O
1	IO_L13N_1	IO_L13N_1	F22	I/O
1	IO_L13P_1	IO_L13P_1	E23	I/O
1	IO_L14N_1	IO_L14N_1	D22	I/O
1	IO_L14P_1	IO_L14P_1	E22	I/O
1	IO_L15N_1	IO_L15N_1	A22	I/O
1	IO_L15P_1	IO_L15P_1	B22	I/O
1	IO_L16N_1	IO_L16N_1	F21	I/O
1	IO_L16P_1	IO_L16P_1	G21	I/O
1	IO_L17N_1/VREF_1	IO_L17N_1/VREF_1	B21	VREF
1	IO_L17P_1	IO_L17P_1	C21	I/O
1	IO_L18N_1	IO_L18N_1	G20	I/O
1	IO_L18P_1	IO_L18P_1	H20	I/O
1	IO_L19N_1	IO_L19N_1	E20	I/O
1	IO_L19P_1	IO_L19P_1	F20	I/O
1	IO_L20N_1	IO_L20N_1	C20	I/O
1	IO_L20P_1	IO_L20P_1	D20	I/O
1	IO_L21N_1	IO_L21N_1	A20	I/O
1	IO_L21P_1	IO_L21P_1	B20	I/O
1	IO_L22N_1	IO_L22N_1	J19	I/O
1	IO_L22P_1	IO_L22P_1	K19	I/O
1	IO_L23N_1	IO_L23N_1	G19	I/O
1	IO_L23P_1	IO_L23P_1	H19	I/O
1	IO_L24N_1	IO_L24N_1	E19	I/O
1	IO_L24P_1	IO_L24P_1	F19	I/O
1	IO_L25N_1	IO_L25N_1	C19	I/O

Table 107: **FG900 Package Pinout *(Cont'd)***

Bank	XC3S2000 Pin Name	XC3S4000, XC3S5000 Pin Name	FG900 Pin Number	Type
1	IO_L25P_1	IO_L25P_1	D19	I/O
1	IO_L26N_1	IO_L26N_1	A19	I/O
1	IO_L26P_1	IO_L26P_1	B19	I/O
1	IO_L27N_1	IO_L27N_1	F17	I/O
1	IO_L27P_1	IO_L27P_1	G17	I/O
1	IO_L28N_1	IO_L28N_1	B17	I/O
1	IO_L28P_1	IO_L28P_1	C17	I/O
1	IO_L29N_1	IO_L29N_1	J16	I/O
1	IO_L29P_1	IO_L29P_1	K16	I/O
1	IO_L30N_1	IO_L30N_1	G16	I/O
1	IO_L30P_1	IO_L30P_1	H16	I/O
1	IO_L31N_1/VREF_1	IO_L31N_1/VREF_1	D16	VREF
1	IO_L31P_1	IO_L31P_1	E16	I/O
1	IO_L32N_1/GCLK5	IO_L32N_1/GCLK5	B16	GCLK
1	IO_L32P_1/GCLK4	IO_L32P_1/GCLK4	C16	GCLK
1	N.C. (◆)	IO_L37N_1	H18	I/O
1	N.C. (◆)	IO_L37P_1	J18	I/O
1	N.C. (◆)	IO_L38N_1	D18	I/O
1	N.C. (◆)	IO_L38P_1	E18	I/O
1	N.C. (◆)	IO_L39N_1	A18	I/O
1	N.C. (◆)	IO_L39P_1	B18	I/O
1	N.C. (◆)	IO_L40N_1	K17	I/O
1	N.C. (◆)	IO_L40P_1	K18	I/O
1	VCCO_1	VCCO_1	L17	VCCO
1	VCCO_1	VCCO_1	C18	VCCO
1	VCCO_1	VCCO_1	G18	VCCO
1	VCCO_1	VCCO_1	L18	VCCO
1	VCCO_1	VCCO_1	L19	VCCO
1	VCCO_1	VCCO_1	J20	VCCO
1	VCCO_1	VCCO_1	C22	VCCO
1	VCCO_1	VCCO_1	G22	VCCO
1	VCCO_1	VCCO_1	E24	VCCO
1	VCCO_1	VCCO_1	C26	VCCO
2	IO	IO	J25	I/O
2	IO_L01N_2/VRP_2	IO_L01N_2/VRP_2	C29	DCI
2	IO_L01P_2/VRN_2	IO_L01P_2/VRN_2	C30	DCI
2	IO_L02N_2	IO_L02N_2	D27	I/O
2	IO_L02P_2	IO_L02P_2	D28	I/O
2	IO_L03N_2/VREF_2	IO_L03N_2/VREF_2	D29	VREF
2	IO_L03P_2	IO_L03P_2	D30	I/O

Table 107: **FG900 Package Pinout *(Cont'd)***

Bank	XC3S2000 Pin Name	XC3S4000, XC3S5000 Pin Name	FG900 Pin Number	Type
2	IO_L04N_2	IO_L04N_2	E29	I/O
2	IO_L04P_2	IO_L04P_2	E30	I/O
2	IO_L05N_2	IO_L05N_2	F28	I/O
2	IO_L05P_2	IO_L05P_2	F29	I/O
2	IO_L06N_2	IO_L06N_2	G27	I/O
2	IO_L06P_2	IO_L06P_2	G28	I/O
2	IO_L07N_2	IO_L07N_2	G29	I/O
2	IO_L07P_2	IO_L07P_2	G30	I/O
2	IO_L08N_2	IO_L08N_2	G25	I/O
2	IO_L08P_2	IO_L08P_2	H24	I/O
2	IO_L09N_2/VREF_2	IO_L09N_2/VREF_2	H25	VREF
2	IO_L09P_2	IO_L09P_2	H26	I/O
2	IO_L10N_2	IO_L10N_2	H27	I/O
2	IO_L10P_2	IO_L10P_2	H28	I/O
2	IO_L12N_2	IO_L12N_2	H29	I/O
2	IO_L12P_2	IO_L12P_2	H30	I/O
2	IO_L13N_2	IO_L13N_2	J26	I/O
2	IO_L13P_2/VREF_2	IO_L13P_2/VREF_2	J27	VREF
2	IO_L14N_2	IO_L14N_2	J29	I/O
2	IO_L14P_2	IO_L14P_2	J30	I/O
2	IO_L15N_2	IO_L15N_2	J23	I/O
2	IO_L15P_2	IO_L15P_2	K22	I/O
2	IO_L16N_2	IO_L16N_2	K24	I/O
2	IO_L16P_2	IO_L16P_2	K25	I/O
2	IO_L19N_2	IO_L19N_2	L25	I/O
2	IO_L19P_2	IO_L19P_2	L26	I/O
2	IO_L20N_2	IO_L20N_2	L27	I/O
2	IO_L20P_2	IO_L20P_2	L28	I/O
2	IO_L21N_2	IO_L21N_2	L29	I/O
2	IO_L21P_2	IO_L21P_2	L30	I/O
2	IO_L22N_2	IO_L22N_2	M22	I/O
2	IO_L22P_2	IO_L22P_2	M23	I/O
2	IO_L23N_2/VREF_2	IO_L23N_2/VREF_2	M24	VREF
2	IO_L23P_2	IO_L23P_2	M25	I/O
2	IO_L24N_2	IO_L24N_2	M27	I/O
2	IO_L24P_2	IO_L24P_2	M28	I/O
2	IO_L26N_2	IO_L26N_2	M21	I/O
2	IO_L26P_2	IO_L26P_2	N21	I/O
2	IO_L27N_2	IO_L27N_2	N22	I/O
2	IO_L27P_2	IO_L27P_2	N23	I/O

Table 107: **FG900 Package Pinout *(Cont'd)***

Bank	XC3S2000 Pin Name	XC3S4000, XC3S5000 Pin Name	FG900 Pin Number	Type
2	IO_L28N_2	IO_L28N_2	M26	I/O
2	IO_L28P_2	IO_L28P_2	N25	I/O
2	IO_L29N_2	IO_L29N_2	N26	I/O
2	IO_L29P_2	IO_L29P_2	N27	I/O
2	IO_L31N_2	IO_L31N_2	N29	I/O
2	IO_L31P_2	IO_L31P_2	N30	I/O
2	IO_L32N_2	IO_L32N_2	P21	I/O
2	IO_L32P_2	IO_L32P_2	P22	I/O
2	IO_L33N_2	IO_L33N_2	P24	I/O
2	IO_L33P_2	IO_L33P_2	P25	I/O
2	IO_L34N_2/VREF_2	IO_L34N_2/VREF_2	P28	VREF
2	IO_L34P_2	IO_L34P_2	P29	I/O
2	IO_L35N_2	IO_L35N_2	R21	I/O
2	IO_L35P_2	IO_L35P_2	R22	I/O
2	IO_L37N_2	IO_L37N_2	R23	I/O
2	IO_L37P_2	IO_L37P_2	R24	I/O
2	IO_L38N_2	IO_L38N_2	R25	I/O
2	IO_L38P_2	IO_L38P_2	R26	I/O
2	IO_L39N_2	IO_L39N_2	R27	I/O
2	IO_L39P_2	IO_L39P_2	R28	I/O
2	IO_L40N_2	IO_L40N_2	R29	I/O
2	IO_L40P_2/VREF_2	IO_L40P_2/VREF_2	R30	VREF
2	N.C. (◆)	IO_L41N_2	E27	I/O
2	N.C. (◆)	IO_L41P_2	F26	I/O
2	N.C. (◆)	IO_L45N_2	K28	I/O
2	N.C. (◆)	IO_L45P_2	K29	I/O
2	N.C. (◆)	IO_L46N_2	K21	I/O
2	N.C. (◆)	IO_L46P_2	L21	I/O
2	N.C. (◆)	IO_L47N_2	L23	I/O
2	N.C. (◆)	IO_L47P_2	L24	I/O
2	N.C. (◆)	IO_L50N_2	M29	I/O
2	N.C. (◆)	IO_L50P_2	M30	I/O
2	VCCO_2	VCCO_2	M20	VCCO
2	VCCO_2	VCCO_2	N20	VCCO
2	VCCO_2	VCCO_2	P20	VCCO
2	VCCO_2	VCCO_2	L22	VCCO
2	VCCO_2	VCCO_2	J24	VCCO
2	VCCO_2	VCCO_2	N24	VCCO
2	VCCO_2	VCCO_2	G26	VCCO
2	VCCO_2	VCCO_2	E28	VCCO

Table 107: **FG900 Package Pinout *(Cont'd)***

Bank	XC3S2000 Pin Name	XC3S4000, XC3S5000 Pin Name	FG900 Pin Number	Type
2	VCCO_2	VCCO_2	J28	VCCO
2	VCCO_2	VCCO_2	N28	VCCO
3	IO	IO	AB25	I/O
3	IO_L01N_3/VRP_3	IO_L01N_3/VRP_3	AH30	DCI
3	IO_L01P_3/VRN_3	IO_L01P_3/VRN_3	AH29	DCI
3	IO_L02N_3/VREF_3	IO_L02N_3/VREF_3	AG28	VREF
3	IO_L02P_3	IO_L02P_3	AG27	I/O
3	IO_L03N_3	IO_L03N_3	AG30	I/O
3	IO_L03P_3	IO_L03P_3	AG29	I/O
3	IO_L04N_3	IO_L04N_3	AF30	I/O
3	IO_L04P_3	IO_L04P_3	AF29	I/O
3	IO_L05N_3	IO_L05N_3	AE26	I/O
3	IO_L05P_3	IO_L05P_3	AF27	I/O
3	IO_L06N_3	IO_L06N_3	AE29	I/O
3	IO_L06P_3	IO_L06P_3	AE28	I/O
3	IO_L07N_3	IO_L07N_3	AD28	I/O
3	IO_L07P_3	IO_L07P_3	AD27	I/O
3	IO_L08N_3	IO_L08N_3	AD30	I/O
3	IO_L08P_3	IO_L08P_3	AD29	I/O
3	IO_L09N_3	IO_L09N_3	AC24	I/O
3	IO_L09P_3/VREF_3	IO_L09P_3/VREF_3	AD25	VREF
3	IO_L10N_3	IO_L10N_3	AC26	I/O
3	IO_L10P_3	IO_L10P_3	AC25	I/O
3	IO_L11N_3	IO_L11N_3	AC28	I/O
3	IO_L11P_3	IO_L11P_3	AC27	I/O
3	IO_L13N_3/VREF_3	IO_L13N_3/VREF_3	AC30	VREF
3	IO_L13P_3	IO_L13P_3	AC29	I/O
3	IO_L14N_3	IO_L14N_3	AB27	I/O
3	IO_L14P_3	IO_L14P_3	AB26	I/O
3	IO_L15N_3	IO_L15N_3	AB30	I/O
3	IO_L15P_3	IO_L15P_3	AB29	I/O
3	IO_L16N_3	IO_L16N_3	AA22	I/O
3	IO_L16P_3	IO_L16P_3	AB23	I/O
3	IO_L17N_3	IO_L17N_3	AA25	I/O
3	IO_L17P_3/VREF_3	IO_L17P_3/VREF_3	AA24	VREF
3	IO_L19N_3	IO_L19N_3	AA29	I/O
3	IO_L19P_3	IO_L19P_3	AA28	I/O
3	IO_L20N_3	IO_L20N_3	Y21	I/O
3	IO_L20P_3	IO_L20P_3	AA21	I/O
3	IO_L21N_3	IO_L21N_3	Y24	I/O

Table 107: **FG900 Package Pinout *(Cont'd)***

Bank	XC3S2000 Pin Name	XC3S4000, XC3S5000 Pin Name	FG900 Pin Number	Type
3	IO_L21P_3	IO_L21P_3	Y23	I/O
3	IO_L22N_3	IO_L22N_3	Y26	I/O
3	IO_L22P_3	IO_L22P_3	Y25	I/O
3	IO_L23N_3	IO_L23N_3	Y28	I/O
3	IO_L23P_3/VREF_3	IO_L23P_3/VREF_3	Y27	VREF
3	IO_L24N_3	IO_L24N_3	Y30	I/O
3	IO_L24P_3	IO_L24P_3	Y29	I/O
3	IO_L26N_3	IO_L26N_3	W30	I/O
3	IO_L26P_3	IO_L26P_3	W29	I/O
3	IO_L27N_3	IO_L27N_3	V21	I/O
3	IO_L27P_3	IO_L27P_3	W21	I/O
3	IO_L28N_3	IO_L28N_3	V23	I/O
3	IO_L28P_3	IO_L28P_3	V22	I/O
3	IO_L29N_3	IO_L29N_3	V25	I/O
3	IO_L29P_3	IO_L29P_3	W26	I/O
3	IO_L31N_3	IO_L31N_3	V30	I/O
3	IO_L31P_3	IO_L31P_3	V29	I/O
3	IO_L32N_3	IO_L32N_3	U22	I/O
3	IO_L32P_3	IO_L32P_3	U21	I/O
3	IO_L33N_3	IO_L33N_3	U25	I/O
3	IO_L33P_3	IO_L33P_3	U24	I/O
3	IO_L34N_3	IO_L34N_3	U29	I/O
3	IO_L34P_3/VREF_3	IO_L34P_3/VREF_3	U28	VREF
3	IO_L35N_3	IO_L35N_3	T22	I/O
3	IO_L35P_3	IO_L35P_3	T21	I/O
3	IO_L37N_3	IO_L37N_3	T24	I/O
3	IO_L37P_3	IO_L37P_3	T23	I/O
3	IO_L38N_3	IO_L38N_3	T26	I/O
3	IO_L38P_3	IO_L38P_3	T25	I/O
3	IO_L39N_3	IO_L39N_3	T28	I/O
3	IO_L39P_3	IO_L39P_3	T27	I/O
3	IO_L40N_3/VREF_3	IO_L40N_3/VREF_3	T30	VREF
3	IO_L40P_3	IO_L40P_3	T29	I/O
3	N.C. (◆)	IO_L46N_3	W23	I/O
3	N.C. (◆)	IO_L46P_3	W22	I/O
3	N.C. (◆)	IO_L47N_3	W25	I/O
3	N.C. (◆)	IO_L47P_3	W24	I/O
3	N.C. (◆)	IO_L48N_3	W28	I/O
3	N.C. (◆)	IO_L48P_3	W27	I/O
3	N.C. (◆)	IO_L50N_3	V27	I/O

Table 107: **FG900 Package Pinout *(Cont'd)***

Bank	XC3S2000 Pin Name	XC3S4000, XC3S5000 Pin Name	FG900 Pin Number	Type
3	N.C. (◆)	IO_L50P_3	V26	I/O
3	VCCO_3	VCCO_3	U20	VCCO
3	VCCO_3	VCCO_3	V20	VCCO
3	VCCO_3	VCCO_3	W20	VCCO
3	VCCO_3	VCCO_3	Y22	VCCO
3	VCCO_3	VCCO_3	V24	VCCO
3	VCCO_3	VCCO_3	AB24	VCCO
3	VCCO_3	VCCO_3	AD26	VCCO
3	VCCO_3	VCCO_3	V28	VCCO
3	VCCO_3	VCCO_3	AB28	VCCO
3	VCCO_3	VCCO_3	AF28	VCCO
4	IO	IO	AA16	I/O
4	IO	IO	AG18	I/O
4	IO	IO	AA18	I/O
4	IO	IO	AE22	I/O
4	IO	IO	AD23	I/O
4	IO	IO	AH27	I/O
4	IO/VREF_4	IO/VREF_4	AF16	VREF
4	IO/VREF_4	IO/VREF_4	AK28	VREF
4	IO_L01N_4/VRP_4	IO_L01N_4/VRP_4	AJ27	DCI
4	IO_L01P_4/VRN_4	IO_L01P_4/VRN_4	AK27	DCI
4	IO_L02N_4	IO_L02N_4	AJ26	I/O
4	IO_L02P_4	IO_L02P_4	AK26	I/O
4	IO_L03N_4	IO_L03N_4	AG26	I/O
4	IO_L03P_4	IO_L03P_4	AF25	I/O
4	IO_L04N_4	IO_L04N_4	AD24	I/O
4	IO_L04P_4	IO_L04P_4	AC23	I/O
4	IO_L05N_4	IO_L05N_4	AE23	I/O
4	IO_L05P_4	IO_L05P_4	AF23	I/O
4	IO_L06N_4/VREF_4	IO_L06N_4/VREF_4	AG23	VREF
4	IO_L06P_4	IO_L06P_4	AH23	I/O
4	IO_L07N_4	IO_L07N_4	AJ23	I/O
4	IO_L07P_4	IO_L07P_4	AK23	I/O
4	IO_L08N_4	IO_L08N_4	AB22	I/O
4	IO_L08P_4	IO_L08P_4	AC22	I/O
4	IO_L09N_4	IO_L09N_4	AF22	I/O
4	IO_L09P_4	IO_L09P_4	AG22	I/O
4	IO_L10N_4	IO_L10N_4	AJ22	I/O
4	IO_L10P_4	IO_L10P_4	AK22	I/O
4	IO_L11N_4	IO_L11N_4	AD21	I/O

Table 107: **FG900 Package Pinout *(Cont'd)***

Bank	XC3S2000 Pin Name	XC3S4000, XC3S5000 Pin Name	FG900 Pin Number	Type
4	IO_L11P_4	IO_L11P_4	AE21	I/O
4	IO_L12N_4	IO_L12N_4	AH21	I/O
4	IO_L12P_4	IO_L12P_4	AJ21	I/O
4	IO_L13N_4	IO_L13N_4	AB21	I/O
4	IO_L13P_4	IO_L13P_4	AA20	I/O
4	IO_L14N_4	IO_L14N_4	AC20	I/O
4	IO_L14P_4	IO_L14P_4	AD20	I/O
4	IO_L15N_4	IO_L15N_4	AE20	I/O
4	IO_L15P_4	IO_L15P_4	AF20	I/O
4	IO_L16N_4	IO_L16N_4	AG20	I/O
4	IO_L16P_4	IO_L16P_4	AH20	I/O
4	IO_L17N_4	IO_L17N_4	AJ20	I/O
4	IO_L17P_4	IO_L17P_4	AK20	I/O
4	IO_L18N_4	IO_L18N_4	AA19	I/O
4	IO_L18P_4	IO_L18P_4	AB19	I/O
4	IO_L19N_4	IO_L19N_4	AC19	I/O
4	IO_L19P_4	IO_L19P_4	AD19	I/O
4	IO_L20N_4	IO_L20N_4	AE19	I/O
4	IO_L20P_4	IO_L20P_4	AF19	I/O
4	IO_L21N_4	IO_L21N_4	AG19	I/O
4	IO_L21P_4	IO_L21P_4	AH19	I/O
4	IO_L22N_4/VREF_4	IO_L22N_4/VREF_4	AJ19	VREF
4	IO_L22P_4	IO_L22P_4	AK19	I/O
4	IO_L23N_4	IO_L23N_4	AB18	I/O
4	IO_L23P_4	IO_L23P_4	AC18	I/O
4	IO_L24N_4	IO_L24N_4	AE18	I/O
4	IO_L24P_4	IO_L24P_4	AF18	I/O
4	IO_L25N_4	IO_L25N_4	AJ18	I/O
4	IO_L25P_4	IO_L25P_4	AK18	I/O
4	IO_L26N_4	IO_L26N_4	AA17	I/O
4	IO_L26P_4/VREF_4	IO_L26P_4/VREF_4	AB17	VREF
4	IO_L27N_4/DIN/D0	IO_L27N_4/DIN/D0	AD17	DUAL
4	IO_L27P_4/D1	IO_L27P_4/D1	AE17	DUAL
4	IO_L28N_4	IO_L28N_4	AH17	I/O
4	IO_L28P_4	IO_L28P_4	AJ17	I/O
4	IO_L29N_4	IO_L29N_4	AB16	I/O
4	IO_L29P_4	IO_L29P_4	AC16	I/O
4	IO_L30N_4/D2	IO_L30N_4/D2	AD16	DUAL
4	IO_L30P_4/D3	IO_L30P_4/D3	AE16	DUAL
4	IO_L31N_4/INIT_B	IO_L31N_4/INIT_B	AG16	DUAL

Table 107: **FG900 Package Pinout *(Cont'd)***

Bank	XC3S2000 Pin Name	XC3S4000, XC3S5000 Pin Name	FG900 Pin Number	Type
4	IO_L31P_4/DOUT/BUSY	IO_L31P_4/DOUT/BUSY	AH16	DUAL
4	IO_L32N_4/GCLK1	IO_L32N_4/GCLK1	AJ16	GCLK
4	IO_L32P_4/GCLK0	IO_L32P_4/GCLK0	AK16	GCLK
4	N.C. (◆)	IO_L33N_4	AH25	I/O
4	N.C. (◆)	IO_L33P_4	AJ25	I/O
4	N.C. (◆)	IO_L34N_4	AE25	I/O
4	N.C. (◆)	IO_L34P_4	AE24	I/O
4	N.C. (◆)	IO_L35N_4	AG24	I/O
4	N.C. (◆)	IO_L35P_4	AH24	I/O
4	N.C. (◆)	IO_L38N_4	AJ24	I/O
4	N.C. (◆)	IO_L38P_4	AK24	I/O
4	VCCO_4	VCCO_4	Y17	VCCO
4	VCCO_4	VCCO_4	Y18	VCCO
4	VCCO_4	VCCO_4	AD18	VCCO
4	VCCO_4	VCCO_4	AH18	VCCO
4	VCCO_4	VCCO_4	Y19	VCCO
4	VCCO_4	VCCO_4	AB20	VCCO
4	VCCO_4	VCCO_4	AD22	VCCO
4	VCCO_4	VCCO_4	AH22	VCCO
4	VCCO_4	VCCO_4	AF24	VCCO
4	VCCO_4	VCCO_4	AH26	VCCO
5	IO	IO	AE6	I/O
5	IO	IO	AB10	I/O
5	IO	IO	AA11	I/O
5	IO	IO	AA15	I/O
5	IO	IO	AE15	I/O
5	IO/VREF_5	IO/VREF_5	AH4	VREF
5	IO/VREF_5	IO/VREF_5	AK15	VREF
5	IO_L01N_5/RDWR_B	IO_L01N_5/RDWR_B	AK4	DUAL
5	IO_L01P_5/CS_B	IO_L01P_5/CS_B	AJ4	DUAL
5	IO_L02N_5	IO_L02N_5	AK5	I/O
5	IO_L02P_5	IO_L02P_5	AJ5	I/O
5	IO_L03N_5	IO_L03N_5	AF6	I/O
5	IO_L03P_5	IO_L03P_5	AG5	I/O
5	IO_L04N_5	IO_L04N_5	AJ6	I/O
5	IO_L04P_5	IO_L04P_5	AH6	I/O
5	IO_L05N_5	IO_L05N_5	AE7	I/O
5	IO_L05P_5	IO_L05P_5	AD7	I/O
5	IO_L06N_5	IO_L06N_5	AH7	I/O
5	IO_L06P_5	IO_L06P_5	AG7	I/O

Table 107: **FG900 Package Pinout *(Cont'd)***

Bank	XC3S2000 Pin Name	XC3S4000, XC3S5000 Pin Name	FG900 Pin Number	Type
5	IO_L07N_5	IO_L07N_5	AK8	I/O
5	IO_L07P_5	IO_L07P_5	AJ8	I/O
5	IO_L08N_5	IO_L08N_5	AC9	I/O
5	IO_L08P_5	IO_L08P_5	AB9	I/O
5	IO_L09N_5	IO_L09N_5	AG9	I/O
5	IO_L09P_5	IO_L09P_5	AF9	I/O
5	IO_L10N_5/VRP_5	IO_L10N_5/VRP_5	AK9	DCI
5	IO_L10P_5/VRN_5	IO_L10P_5/VRN_5	AJ9	DCI
5	IO_L11N_5/VREF_5	IO_L11N_5/VREF_5	AE10	VREF
5	IO_L11P_5	IO_L11P_5	AE9	I/O
5	IO_L12N_5	IO_L12N_5	AJ10	I/O
5	IO_L12P_5	IO_L12P_5	AH10	I/O
5	IO_L13N_5	IO_L13N_5	AD11	I/O
5	IO_L13P_5	IO_L13P_5	AD10	I/O
5	IO_L14N_5	IO_L14N_5	AF11	I/O
5	IO_L14P_5	IO_L14P_5	AE11	I/O
5	IO_L15N_5	IO_L15N_5	AH11	I/O
5	IO_L15P_5	IO_L15P_5	AG11	I/O
5	IO_L16N_5	IO_L16N_5	AK11	I/O
5	IO_L16P_5	IO_L16P_5	AJ11	I/O
5	IO_L17N_5	IO_L17N_5	AB12	I/O
5	IO_L17P_5	IO_L17P_5	AC11	I/O
5	IO_L18N_5	IO_L18N_5	AD12	I/O
5	IO_L18P_5	IO_L18P_5	AC12	I/O
5	IO_L19N_5	IO_L19N_5	AF12	I/O
5	IO_L19P_5/VREF_5	IO_L19P_5/VREF_5	AE12	VREF
5	IO_L20N_5	IO_L20N_5	AH12	I/O
5	IO_L20P_5	IO_L20P_5	AG12	I/O
5	IO_L21N_5	IO_L21N_5	AK12	I/O
5	IO_L21P_5	IO_L21P_5	AJ12	I/O
5	IO_L22N_5	IO_L22N_5	AA13	I/O
5	IO_L22P_5	IO_L22P_5	AA12	I/O
5	IO_L23N_5	IO_L23N_5	AC13	I/O
5	IO_L23P_5	IO_L23P_5	AB13	I/O
5	IO_L24N_5	IO_L24N_5	AG13	I/O
5	IO_L24P_5	IO_L24P_5	AF13	I/O
5	IO_L25N_5	IO_L25N_5	AK13	I/O
5	IO_L25P_5	IO_L25P_5	AJ13	I/O
5	IO_L26N_5	IO_L26N_5	AB14	I/O
5	IO_L26P_5	IO_L26P_5	AA14	I/O

Table 107: **FG900 Package Pinout *(Cont'd)***

Bank	XC3S2000 Pin Name	XC3S4000, XC3S5000 Pin Name	FG900 Pin Number	Type
5	IO_L27N_5/VREF_5	IO_L27N_5/VREF_5	AE14	VREF
5	IO_L27P_5	IO_L27P_5	AE13	I/O
5	IO_L28N_5/D6	IO_L28N_5/D6	AJ14	DUAL
5	IO_L28P_5/D7	IO_L28P_5/D7	AH14	DUAL
5	IO_L29N_5	IO_L29N_5	AC15	I/O
5	IO_L29P_5/VREF_5	IO_L29P_5/VREF_5	AB15	VREF
5	IO_L30N_5	IO_L30N_5	AD15	I/O
5	IO_L30P_5	IO_L30P_5	AD14	I/O
5	IO_L31N_5/D4	IO_L31N_5/D4	AG15	DUAL
5	IO_L31P_5/D5	IO_L31P_5/D5	AF15	DUAL
5	IO_L32N_5/GCLK3	IO_L32N_5/GCLK3	AJ15	GCLK
5	IO_L32P_5/GCLK2	IO_L32P_5/GCLK2	AH15	GCLK
5	N.C. (◆)	IO_L35N_5	AK7	I/O
5	N.C. (◆)	IO_L35P_5	AJ7	I/O
5	N.C. (◆)	IO_L36N_5	AD8	I/O
5	N.C. (◆)	IO_L36P_5	AC8	I/O
5	N.C. (◆)	IO_L37N_5	AF8	I/O
5	N.C. (◆)	IO_L37P_5	AE8	I/O
5	N.C. (◆)	IO_L38N_5	AH8	I/O
5	N.C. (◆)	IO_L38P_5	AG8	I/O
5	VCCO_5	VCCO_5	AH5	VCCO
5	VCCO_5	VCCO_5	AF7	VCCO
5	VCCO_5	VCCO_5	AD9	VCCO
5	VCCO_5	VCCO_5	AH9	VCCO
5	VCCO_5	VCCO_5	AB11	VCCO
5	VCCO_5	VCCO_5	Y12	VCCO
5	VCCO_5	VCCO_5	Y13	VCCO
5	VCCO_5	VCCO_5	AD13	VCCO
5	VCCO_5	VCCO_5	AH13	VCCO
5	VCCO_5	VCCO_5	Y14	VCCO
6	IO	IO	AB6	I/O
6	IO_L01N_6/VRP_6	IO_L01N_6/VRP_6	AH2	DCI
6	IO_L01P_6/VRN_6	IO_L01P_6/VRN_6	AH1	DCI
6	IO_L02N_6	IO_L02N_6	AG4	I/O
6	IO_L02P_6	IO_L02P_6	AG3	I/O
6	IO_L03N_6/VREF_6	IO_L03N_6/VREF_6	AG2	VREF
6	IO_L03P_6	IO_L03P_6	AG1	I/O
6	IO_L04N_6	IO_L04N_6	AF2	I/O
6	IO_L04P_6	IO_L04P_6	AF1	I/O
6	IO_L05N_6	IO_L05N_6	AF4	I/O

Table 107: **FG900 Package Pinout *(Cont'd)***

Bank	XC3S2000 Pin Name	XC3S4000, XC3S5000 Pin Name	FG900 Pin Number	Type
6	IO_L05P_6	IO_L05P_6	AE5	I/O
6	IO_L06N_6	IO_L06N_6	AE3	I/O
6	IO_L06P_6	IO_L06P_6	AE2	I/O
6	IO_L07N_6	IO_L07N_6	AD4	I/O
6	IO_L07P_6	IO_L07P_6	AD3	I/O
6	IO_L08N_6	IO_L08N_6	AD2	I/O
6	IO_L08P_6	IO_L08P_6	AD1	I/O
6	IO_L09N_6/VREF_6	IO_L09N_6/VREF_6	AD6	VREF
6	IO_L09P_6	IO_L09P_6	AC7	I/O
6	IO_L10N_6	IO_L10N_6	AC6	I/O
6	IO_L10P_6	IO_L10P_6	AC5	I/O
6	IO_L11N_6	IO_L11N_6	AC4	I/O
6	IO_L11P_6	IO_L11P_6	AC3	I/O
6	IO_L13N_6	IO_L13N_6	AC2	I/O
6	IO_L13P_6/VREF_6	IO_L13P_6/VREF_6	AC1	VREF
6	IO_L14N_6	IO_L14N_6	AB5	I/O
6	IO_L14P_6	IO_L14P_6	AB4	I/O
6	IO_L15N_6	IO_L15N_6	AB2	I/O
6	IO_L15P_6	IO_L15P_6	AB1	I/O
6	IO_L16N_6	IO_L16N_6	AB8	I/O
6	IO_L16P_6	IO_L16P_6	AA9	I/O
6	IO_L17N_6	IO_L17N_6	AA7	I/O
6	IO_L17P_6/VREF_6	IO_L17P_6/VREF_6	AA6	VREF
6	IO_L19N_6	IO_L19N_6	AA3	I/O
6	IO_L19P_6	IO_L19P_6	AA2	I/O
6	IO_L20N_6	IO_L20N_6	AA10	I/O
6	IO_L20P_6	IO_L20P_6	Y10	I/O
6	IO_L21N_6	IO_L21N_6	Y8	I/O
6	IO_L21P_6	IO_L21P_6	Y7	I/O
6	IO_L22N_6	IO_L22N_6	Y6	I/O
6	IO_L22P_6	IO_L22P_6	Y5	I/O
6	IO_L24N_6/VREF_6	IO_L24N_6/VREF_6	Y2	VREF
6	IO_L24P_6	IO_L24P_6	Y1	I/O
6	N.C. (◆)	IO_L25N_6	W9	I/O
6	N.C. (◆)	IO_L25P_6	W8	I/O
6	IO_L26N_6	IO_L26N_6	W7	I/O
6	IO_L26P_6	IO_L26P_6	W6	I/O
6	IO_L27N_6	IO_L27N_6	W4	I/O
6	IO_L27P_6	IO_L27P_6	W3	I/O
6	IO_L28N_6	IO_L28N_6	W2	I/O

Table 107: **FG900 Package Pinout *(Cont'd)***

Bank	XC3S2000 Pin Name	XC3S4000, XC3S5000 Pin Name	FG900 Pin Number	Type
6	IO_L28P_6	IO_L28P_6	W1	I/O
6	IO_L29N_6	IO_L29N_6	W10	I/O
6	IO_L29P_6	IO_L29P_6	V10	I/O
6	N.C. (◆)	IO_L30N_6	V9	I/O
6	N.C. (◆)	IO_L30P_6	V8	I/O
6	IO_L31N_6	IO_L31N_6	W5	I/O
6	IO_L31P_6	IO_L31P_6	V6	I/O
6	IO_L32N_6	IO_L32N_6	V5	I/O
6	IO_L32P_6	IO_L32P_6	V4	I/O
6	IO_L33N_6	IO_L33N_6	V2	I/O
6	IO_L33P_6	IO_L33P_6	V1	I/O
6	IO_L34N_6/VREF_6	IO_L34N_6/VREF_6	U10	VREF
6	IO_L34P_6	IO_L34P_6	U9	I/O
6	IO_L35N_6	IO_L35N_6	U7	I/O
6	IO_L35P_6	IO_L35P_6	U6	I/O
6	N.C. (◆)	IO_L36N_6	U3	I/O
6	N.C. (◆)	IO_L36P_6	U2	I/O
6	IO_L37N_6	IO_L37N_6	T10	I/O
6	IO_L37P_6	IO_L37P_6	T9	I/O
6	IO_L38N_6	IO_L38N_6	T6	I/O
6	IO_L38P_6	IO_L38P_6	T5	I/O
6	IO_L39N_6	IO_L39N_6	T4	I/O
6	IO_L39P_6	IO_L39P_6	T3	I/O
6	IO_L40N_6	IO_L40N_6	T2	I/O
6	IO_L40P_6/VREF_6	IO_L40P_6/VREF_6	T1	VREF
6	N.C. (◆)	IO_L45N_6	Y4	I/O
6	N.C. (◆)	IO_L45P_6	Y3	I/O
6	N.C. (◆)	IO_L52N_6	T8	I/O
6	N.C. (◆)	IO_L52P_6	T7	I/O
6	VCCO_6	VCCO_6	V3	VCCO
6	VCCO_6	VCCO_6	AB3	VCCO
6	VCCO_6	VCCO_6	AF3	VCCO
6	VCCO_6	VCCO_6	AD5	VCCO
6	VCCO_6	VCCO_6	V7	VCCO
6	VCCO_6	VCCO_6	AB7	VCCO
6	VCCO_6	VCCO_6	Y9	VCCO
6	VCCO_6	VCCO_6	U11	VCCO
6	VCCO_6	VCCO_6	V11	VCCO
6	VCCO_6	VCCO_6	W11	VCCO
7	IO	IO	J6	I/O

Table 107: **FG900 Package Pinout *(Cont'd)***

Bank	XC3S2000 Pin Name	XC3S4000, XC3S5000 Pin Name	FG900 Pin Number	Type
7	IO_L01N_7/VRP_7	IO_L01N_7/VRP_7	C1	DCI
7	IO_L01P_7/VRN_7	IO_L01P_7/VRN_7	C2	DCI
7	IO_L02N_7	IO_L02N_7	D3	I/O
7	IO_L02P_7	IO_L02P_7	D4	I/O
7	IO_L03N_7/VREF_7	IO_L03N_7/VREF_7	D1	VREF
7	IO_L03P_7	IO_L03P_7	D2	I/O
7	IO_L04N_7	IO_L04N_7	E1	I/O
7	IO_L04P_7	IO_L04P_7	E2	I/O
7	IO_L05N_7	IO_L05N_7	F5	I/O
7	IO_L05P_7	IO_L05P_7	E4	I/O
7	IO_L06N_7	IO_L06N_7	F2	I/O
7	IO_L06P_7	IO_L06P_7	F3	I/O
7	IO_L07N_7	IO_L07N_7	G3	I/O
7	IO_L07P_7	IO_L07P_7	G4	I/O
7	IO_L08N_7	IO_L08N_7	G1	I/O
7	IO_L08P_7	IO_L08P_7	G2	I/O
7	IO_L09N_7	IO_L09N_7	H7	I/O
7	IO_L09P_7	IO_L09P_7	G6	I/O
7	IO_L10N_7	IO_L10N_7	H5	I/O
7	IO_L10P_7/VREF_7	IO_L10P_7/VREF_7	H6	VREF
7	IO_L11N_7	IO_L11N_7	H3	I/O
7	IO_L11P_7	IO_L11P_7	H4	I/O
7	IO_L13N_7	IO_L13N_7	H1	I/O
7	IO_L13P_7	IO_L13P_7	H2	I/O
7	IO_L14N_7	IO_L14N_7	J4	I/O
7	IO_L14P_7	IO_L14P_7	J5	I/O
7	IO_L15N_7	IO_L15N_7	J1	I/O
7	IO_L15P_7	IO_L15P_7	J2	I/O
7	IO_L16N_7	IO_L16N_7	K9	I/O
7	IO_L16P_7/VREF_7	IO_L16P_7/VREF_7	J8	VREF
7	IO_L17N_7	IO_L17N_7	K6	I/O
7	IO_L17P_7	IO_L17P_7	K7	I/O
7	IO_L19N_7/VREF_7	IO_L19N_7/VREF_7	K2	VREF
7	IO_L19P_7	IO_L19P_7	K3	I/O
7	IO_L20N_7	IO_L20N_7	L10	I/O
7	IO_L20P_7	IO_L20P_7	K10	I/O
7	IO_L21N_7	IO_L21N_7	L7	I/O
7	IO_L21P_7	IO_L21P_7	L8	I/O
7	IO_L22N_7	IO_L22N_7	L5	I/O
7	IO_L22P_7	IO_L22P_7	L6	I/O

Table 107: **FG900 Package Pinout *(Cont'd)***

Bank	XC3S2000 Pin Name	XC3S4000, XC3S5000 Pin Name	FG900 Pin Number	Type
7	IO_L23N_7	IO_L23N_7	L3	I/O
7	IO_L23P_7	IO_L23P_7	L4	I/O
7	IO_L24N_7	IO_L24N_7	L1	I/O
7	IO_L24P_7	IO_L24P_7	L2	I/O
7	N.C. (◆)	IO_L25N_7	M6	I/O
7	N.C. (◆)	IO_L25P_7	M7	I/O
7	IO_L26N_7	IO_L26N_7	M3	I/O
7	IO_L26P_7	IO_L26P_7	M4	I/O
7	IO_L27N_7	IO_L27N_7	M1	I/O
7	IO_L27P_7/VREF_7	IO_L27P_7/VREF_7	M2	VREF
7	IO_L28N_7	IO_L28N_7	N10	I/O
7	IO_L28P_7	IO_L28P_7	M10	I/O
7	IO_L29N_7	IO_L29N_7	N8	I/O
7	IO_L29P_7	IO_L29P_7	N9	I/O
7	IO_L31N_7	IO_L31N_7	N1	I/O
7	IO_L31P_7	IO_L31P_7	N2	I/O
7	IO_L32N_7	IO_L32N_7	P9	I/O
7	IO_L32P_7	IO_L32P_7	P10	I/O
7	IO_L33N_7	IO_L33N_7	P6	I/O
7	IO_L33P_7	IO_L33P_7	P7	I/O
7	IO_L34N_7	IO_L34N_7	P2	I/O
7	IO_L34P_7	IO_L34P_7	P3	I/O
7	IO_L35N_7	IO_L35N_7	R9	I/O
7	IO_L35P_7	IO_L35P_7	R10	I/O
7	IO_L37N_7	IO_L37N_7	R7	I/O
7	IO_L37P_7/VREF_7	IO_L37P_7/VREF_7	R8	VREF
7	IO_L38N_7	IO_L38N_7	R5	I/O
7	IO_L38P_7	IO_L38P_7	R6	I/O
7	IO_L39N_7	IO_L39N_7	R3	I/O
7	IO_L39P_7	IO_L39P_7	R4	I/O
7	IO_L40N_7/VREF_7	IO_L40N_7/VREF_7	R1	VREF
7	IO_L40P_7	IO_L40P_7	R2	I/O
7	N.C. (◆)	IO_L46N_7	M8	I/O
7	N.C. (◆)	IO_L46P_7	M9	I/O
7	N.C. (◆)	IO_L49N_7	N6	I/O
7	N.C. (◆)	IO_L49P_7	M5	I/O
7	N.C. (◆)	IO_L50N_7	N4	I/O
7	N.C. (◆)	IO_L50P_7	N5	I/O
7	VCCO_7	VCCO_7	E3	VCCO
7	VCCO_7	VCCO_7	J3	VCCO

Table 107: **FG900 Package Pinout *(Cont'd)***

Bank	XC3S2000 Pin Name	XC3S4000, XC3S5000 Pin Name	FG900 Pin Number	Type
7	VCCO_7	VCCO_7	N3	VCCO
7	VCCO_7	VCCO_7	G5	VCCO
7	VCCO_7	VCCO_7	J7	VCCO
7	VCCO_7	VCCO_7	N7	VCCO
7	VCCO_7	VCCO_7	L9	VCCO
7	VCCO_7	VCCO_7	M11	VCCO
7	VCCO_7	VCCO_7	N11	VCCO
7	VCCO_7	VCCO_7	P11	VCCO
N/A	GND	GND	A1	GND
N/A	GND	GND	B1	GND
N/A	GND	GND	F1	GND
N/A	GND	GND	K1	GND
N/A	GND	GND	P1	GND
N/A	GND	GND	U1	GND
N/A	GND	GND	AA1	GND
N/A	GND	GND	AE1	GND
N/A	GND	GND	AJ1	GND
N/A	GND	GND	AK1	GND
N/A	GND	GND	A2	GND
N/A	GND	GND	B2	GND
N/A	GND	GND	AJ2	GND
N/A	GND	GND	E5	GND
N/A	GND	GND	K5	GND
N/A	GND	GND	P5	GND
N/A	GND	GND	U5	GND
N/A	GND	GND	AA5	GND
N/A	GND	GND	AF5	GND
N/A	GND	GND	A6	GND
N/A	GND	GND	AK6	GND
N/A	GND	GND	K8	GND
N/A	GND	GND	P8	GND
N/A	GND	GND	U8	GND
N/A	GND	GND	AA8	GND
N/A	GND	GND	A10	GND
N/A	GND	GND	E10	GND
N/A	GND	GND	H10	GND
N/A	GND	GND	AC10	GND
N/A	GND	GND	AF10	GND
N/A	GND	GND	AK10	GND
N/A	GND	GND	R12	GND

Table 107: **FG900 Package Pinout *(Cont'd)***

Bank	XC3S2000 Pin Name	XC3S4000, XC3S5000 Pin Name	FG900 Pin Number	Type
N/A	GND	GND	T12	GND
N/A	GND	GND	N13	GND
N/A	GND	GND	P13	GND
N/A	GND	GND	R13	GND
N/A	GND	GND	T13	GND
N/A	GND	GND	U13	GND
N/A	GND	GND	V13	GND
N/A	GND	GND	A14	GND
N/A	GND	GND	E14	GND
N/A	GND	GND	H14	GND
N/A	GND	GND	N14	GND
N/A	GND	GND	P14	GND
N/A	GND	GND	R14	GND
N/A	GND	GND	T14	GND
N/A	GND	GND	U14	GND
N/A	GND	GND	V14	GND
N/A	GND	GND	AC14	GND
N/A	GND	GND	AF14	GND
N/A	GND	GND	AK14	GND
N/A	GND	GND	M15	GND
N/A	GND	GND	N15	GND
N/A	GND	GND	P15	GND
N/A	GND	GND	R15	GND
N/A	GND	GND	T15	GND
N/A	GND	GND	U15	GND
N/A	GND	GND	V15	GND
N/A	GND	GND	W15	GND
N/A	GND	GND	M16	GND
N/A	GND	GND	N16	GND
N/A	GND	GND	P16	GND
N/A	GND	GND	R16	GND
N/A	GND	GND	T16	GND
N/A	GND	GND	U16	GND
N/A	GND	GND	V16	GND
N/A	GND	GND	W16	GND
N/A	GND	GND	A17	GND
N/A	GND	GND	E17	GND
N/A	GND	GND	H17	GND
N/A	GND	GND	N17	GND
N/A	GND	GND	P17	GND

Table 107: **FG900 Package Pinout *(Cont'd)***

Bank	XC3S2000 Pin Name	XC3S4000, XC3S5000 Pin Name	FG900 Pin Number	Type
N/A	GND	GND	R17	GND
N/A	GND	GND	T17	GND
N/A	GND	GND	U17	GND
N/A	GND	GND	V17	GND
N/A	GND	GND	AC17	GND
N/A	GND	GND	AF17	GND
N/A	GND	GND	AK17	GND
N/A	GND	GND	N18	GND
N/A	GND	GND	P18	GND
N/A	GND	GND	R18	GND
N/A	GND	GND	T18	GND
N/A	GND	GND	U18	GND
N/A	GND	GND	V18	GND
N/A	GND	GND	R19	GND
N/A	GND	GND	T19	GND
N/A	GND	GND	A21	GND
N/A	GND	GND	E21	GND
N/A	GND	GND	H21	GND
N/A	GND	GND	AC21	GND
N/A	GND	GND	AF21	GND
N/A	GND	GND	AK21	GND
N/A	GND	GND	K23	GND
N/A	GND	GND	P23	GND
N/A	GND	GND	U23	GND
N/A	GND	GND	AA23	GND
N/A	GND	GND	A25	GND
N/A	GND	GND	AK25	GND
N/A	GND	GND	E26	GND
N/A	GND	GND	K26	GND
N/A	GND	GND	P26	GND
N/A	GND	GND	U26	GND
N/A	GND	GND	AA26	GND
N/A	GND	GND	AF26	GND
N/A	GND	GND	A29	GND
N/A	GND	GND	B29	GND
N/A	GND	GND	AJ29	GND
N/A	GND	GND	AK29	GND
N/A	GND	GND	A30	GND
N/A	GND	GND	B30	GND
N/A	GND	GND	F30	GND

Table 107: **FG900 Package Pinout *(Cont'd)***

Bank	XC3S2000 Pin Name	XC3S4000, XC3S5000 Pin Name	FG900 Pin Number	Type
N/A	GND	GND	K30	GND
N/A	GND	GND	P30	GND
N/A	GND	GND	U30	GND
N/A	GND	GND	AA30	GND
N/A	GND	GND	AE30	GND
N/A	GND	GND	AJ30	GND
N/A	GND	GND	AK30	GND
N/A	GND	GND	AK2	GND
N/A	VCCAUX	VCCAUX	F4	VCCAUX
N/A	VCCAUX	VCCAUX	K4	VCCAUX
N/A	VCCAUX	VCCAUX	P4	VCCAUX
N/A	VCCAUX	VCCAUX	U4	VCCAUX
N/A	VCCAUX	VCCAUX	AA4	VCCAUX
N/A	VCCAUX	VCCAUX	AE4	VCCAUX
N/A	VCCAUX	VCCAUX	D6	VCCAUX
N/A	VCCAUX	VCCAUX	AG6	VCCAUX
N/A	VCCAUX	VCCAUX	D10	VCCAUX
N/A	VCCAUX	VCCAUX	AG10	VCCAUX
N/A	VCCAUX	VCCAUX	D14	VCCAUX
N/A	VCCAUX	VCCAUX	AG14	VCCAUX
N/A	VCCAUX	VCCAUX	D17	VCCAUX
N/A	VCCAUX	VCCAUX	AG17	VCCAUX
N/A	VCCAUX	VCCAUX	D21	VCCAUX
N/A	VCCAUX	VCCAUX	AG21	VCCAUX
N/A	VCCAUX	VCCAUX	D25	VCCAUX
N/A	VCCAUX	VCCAUX	AG25	VCCAUX
N/A	VCCAUX	VCCAUX	F27	VCCAUX
N/A	VCCAUX	VCCAUX	K27	VCCAUX
N/A	VCCAUX	VCCAUX	P27	VCCAUX
N/A	VCCAUX	VCCAUX	U27	VCCAUX
N/A	VCCAUX	VCCAUX	AA27	VCCAUX
N/A	VCCAUX	VCCAUX	AE27	VCCAUX
N/A	VCCINT	VCCINT	L11	VCCINT
N/A	VCCINT	VCCINT	R11	VCCINT
N/A	VCCINT	VCCINT	T11	VCCINT
N/A	VCCINT	VCCINT	Y11	VCCINT
N/A	VCCINT	VCCINT	M12	VCCINT
N/A	VCCINT	VCCINT	N12	VCCINT
N/A	VCCINT	VCCINT	P12	VCCINT
N/A	VCCINT	VCCINT	U12	VCCINT

Table 107: **FG900 Package Pinout *(Cont'd)***

Bank	XC3S2000 Pin Name	XC3S4000, XC3S5000 Pin Name	FG900 Pin Number	Type
N/A	VCCINT	VCCINT	V12	VCCINT
N/A	VCCINT	VCCINT	W12	VCCINT
N/A	VCCINT	VCCINT	M13	VCCINT
N/A	VCCINT	VCCINT	W13	VCCINT
N/A	VCCINT	VCCINT	M14	VCCINT
N/A	VCCINT	VCCINT	W14	VCCINT
N/A	VCCINT	VCCINT	L15	VCCINT
N/A	VCCINT	VCCINT	Y15	VCCINT
N/A	VCCINT	VCCINT	L16	VCCINT
N/A	VCCINT	VCCINT	Y16	VCCINT
N/A	VCCINT	VCCINT	M17	VCCINT
N/A	VCCINT	VCCINT	W17	VCCINT
N/A	VCCINT	VCCINT	M18	VCCINT
N/A	VCCINT	VCCINT	W18	VCCINT
N/A	VCCINT	VCCINT	M19	VCCINT
N/A	VCCINT	VCCINT	N19	VCCINT
N/A	VCCINT	VCCINT	P19	VCCINT
N/A	VCCINT	VCCINT	U19	VCCINT
N/A	VCCINT	VCCINT	V19	VCCINT
N/A	VCCINT	VCCINT	W19	VCCINT
N/A	VCCINT	VCCINT	L20	VCCINT
N/A	VCCINT	VCCINT	R20	VCCINT
N/A	VCCINT	VCCINT	T20	VCCINT
N/A	VCCINT	VCCINT	Y20	VCCINT
VCCAUX	CCLK	CCLK	AH28	CONFIG
VCCAUX	DONE	DONE	AJ28	CONFIG
VCCAUX	HSWAP_EN	HSWAP_EN	A3	CONFIG
VCCAUX	M0	M0	AJ3	CONFIG
VCCAUX	M1	M1	AH3	CONFIG
VCCAUX	M2	M2	AK3	CONFIG
VCCAUX	PROG_B	PROG_B	B3	CONFIG
VCCAUX	TCK	TCK	B28	JTAG
VCCAUX	TDI	TDI	C3	JTAG
VCCAUX	TDO	TDO	C28	JTAG
VCCAUX	TMS	TMS	A28	JTAG

User I/Os by Bank

Table 108 indicates how the available user-I/O pins are distributed between the eight I/O banks for the XC3S2000 in the FG900 package. Similarly, Table 109 shows how the available user-I/O pins are distributed between the eight I/O banks for the XC3S4000 and XC3S5000 in the FG900 package.

Table 108: **User I/Os Per Bank for XC3S2000 in FG900 Package**

Edge	I/O Bank	Maximum I/O	All Possible I/O Pins by Type				
			I/O	DUAL	DCI	VREF	GCLK
Top	0	71	62	0	2	5	2
	1	71	62	0	2	5	2
Right	2	69	61	0	2	6	0
	3	71	62	0	2	7	0
Bottom	4	72	57	6	2	5	2
	5	71	55	6	2	6	2
Left	6	69	60	0	2	7	0
	7	71	62	0	2	7	0

Table 109: **User I/Os Per Bank for XC3S4000 and XC3S5000 in FG900 Package**

Edge	I/O Bank	Maximum I/O	All Possible I/O Pins by Type				
			I/O	DUAL	DCI	VREF	GCLK
Top	0	79	70	0	2	5	2
	1	79	70	0	2	5	2
Right	2	79	71	0	2	6	0
	3	79	70	0	2	7	0
Bottom	4	80	65	6	2	5	2
	5	79	63	6	2	6	2
Left	6	79	70	0	2	7	0
	7	79	70	0	2	7	0

FG900 Footprint

Left Half of FG900 Package (Top View)

XC3S2000
(565 max. user I/O)

481 **I/O:** Unrestricted, general-purpose user I/O

48 **VREF:** User I/O or input voltage reference for bank

68 **N.C.:** Unconnected pins for XC3S2000 (◆)

XC3S4000, XC3S5000
(633 max user I/O)

549 **I/O:** Unrestricted, general-purpose user I/O

48 **VREF:** User I/O or input voltage reference for bank

0 **N.C.:** No unconnected pins in this package

All devices

12 **DUAL:** Configuration pin, then possible user I/O

8 **GCLK:** User I/O or global clock buffer input

16 **DCI:** User I/O or reference resistor input for bank

7 **CONFIG:** Dedicated configuration pins

4 **JTAG:** Dedicated JTAG port pins

32 **VCCINT:** Internal core voltage supply (+1.2V)

80 **VCCO:** Output voltage supply for bank

24 **VCCAUX:** Auxiliary voltage supply (+2.5V)

120 **GND:** Ground

Bank 0

	1	2	3	4	5	6	7	8	9	10	11	12	13	14	15
A	GND	GND	HSWAP_EN	I/O L01P_0 VRN_0	I/O L02P_0	GND	I/O L35P_0 ◆	I/O L09P_0	I/O L38P_0 ◆	GND	I/O L17P_0	I/O L22P_0	I/O L25P_0	GND	I/O L32P_0 GCLK6
B	GND	GND	PROG_B	I/O L01N_0 VRP_0	I/O L02N_0	I/O L04P_0	I/O L35N_0 ◆	I/O L09N_0	I/O L38N_0 ◆	I/O L12P_0	I/O L17N_0	I/O L22N_0	I/O L25N_0	I/O L28P_0	I/O L32N_0 GCLK7
C	I/O L01N_7 VRP_7	I/O L01P_7 VRN_7	TDI	IO VREF_0	VCCO_0	I/O L04N_0	I/O L06P_0	I/O L08P_0	VCCO_0	I/O L12N_0	I/O L16P_0	I/O L21P_0	VCCO_0	I/O L28N_0	I/O L31P_0 VREF_0
D	I/O L03N_7 VREF_7	I/O L03P_7	I/O L02N_7	I/O L02P_7	I/O L03N_0	VCCAUX	I/O L06N_0	I/O L08N_0	I/O L37P_0 ◆	VCCAUX	I/O L16N_0	I/O L21N_0	I/O	VCCAUX	I/O L31N_0
E	I/O L04N_7	I/O L04P_7	VCCO_7	I/O L05P_7	GND	I/O L03P_0	VCCO_0	I/O L07P_0	I/O L37N_0 ◆	GND	I/O L15P_0	I/O L20P_0	I/O L24P_0	GND	I/O
F	GND	I/O L06N_7	I/O L06P_7	VCCAUX	I/O L05N_7	I/O L05N_0	I/O L05P_0 VREF_0	I/O L07N_0	IO VREF_0	I/O L11P_0	I/O L15N_0	I/O L20N_0	I/O L24N_0	I/O L27P_0	I/O L30P_0
G	I/O L08N_7	I/O L08P_7	I/O L07N_7	I/O L07P_7	VCCO_7	I/O L09P_7	I/O L36N_0 ◆	I/O	VCCO_0	I/O L11N_0	I/O L14P_0	I/O L19P_0	VCCO_0	I/O L27N_0	I/O L30N_0
H	I/O L13N_7	I/O L13P_7	I/O L11N_7	I/O L11P_7	I/O L10N_7	I/O L10P_7 VREF_7	I/O L09N_7	I/O L36P_0 ◆	I/O L10P_0	GND	I/O L14N_0	I/O L19N_0	I/O L23P_0	GND	I/O L29P_0
J	I/O L15N_7	I/O L15P_7	VCCO_7	I/O L14N_7	I/O L14P_7	I/O	VCCO_7	I/O L16P_7 VREF_7	I/O L10N_0	I/O L13N_0	VCCO_0	I/O L18P_0	I/O L23N_0	I/O L26P_0 VREF_0	I/O L29N_0
K	GND	I/O L19N_7 VREF_7	I/O L19P_7	VCCAUX	GND	I/O L17N_7	I/O L17P_7	GND	I/O L16N_7	I/O L20P_7	I/O L13P_0	I/O L18N_0	I/O	I/O L26N_0	I/O
L	I/O L24N_7	I/O L24P_7	I/O L23N_7	I/O L23P_7	I/O L22N_7	I/O L22P_7	I/O L21N_7	I/O L21P_7	VCCO_7	I/O L20N_7	VCCINT	VCCO_0	VCCO_0	VCCO_0	VCCINT
M	I/O L27N_7	I/O L27P_7 VREF_7	I/O L26N_7	I/O L26P_7	I/O L49P_7 ◆	I/O L25N_7 ◆	I/O L25P_7 ◆	I/O L46N_7 ◆	I/O L46P_7 ◆	I/O L28P_7	VCCO_7	VCCINT	VCCINT	VCCINT	GND
N	I/O L31N_7	I/O L31P_7	VCCO_7	I/O L50N_7 ◆	I/O L50P_7 ◆	I/O L49N_7 ◆	VCCO_7	I/O L29N_7	I/O L29P_7	I/O L28N_7	VCCO_7	VCCINT	GND	GND	GND
P	GND	I/O L34N_7	I/O L34P_7	VCCAUX	GND	I/O L33N_7	I/O L33P_7	GND	I/O L32N_7	I/O L32P_7	VCCO_7	VCCINT	GND	GND	GND
R	I/O L40N_7 VREF_7	I/O L40P_7	I/O L39N_7	I/O L39P_7	I/O L38N_7	I/O L38P_7	I/O L37N_7	I/O L37P_7 VREF_7	I/O L35N_7	I/O L35P_7	VCCINT	GND	GND	GND	GND
T	I/O L40P_6 VREF_6	I/O L40N_6	I/O L39P_6	I/O L39N_6	I/O L38P_6	I/O L38N_6	I/O L52P_6 ◆	I/O L52N_6 ◆	I/O L37P_6	I/O L37N_6	VCCINT	GND	GND	GND	GND
U	GND	I/O L36P_6 ◆	I/O L36N_6 ◆	VCCAUX	GND	I/O L35P_6	I/O L35N_6	GND	I/O L34P_6	I/O L34N_6 VREF_6	VCCO_6	VCCINT	GND	GND	GND
V	I/O L33P_6	I/O L33N_6	VCCO_6	I/O L32P_6	I/O L32N_6	I/O L31P_6	VCCO_6	I/O L30P_6 ◆	I/O L30N_6 ◆	I/O L29P_6	VCCO_6	VCCINT	GND	GND	GND
W	I/O L28P_6	I/O L28N_6	I/O L27P_6	I/O L27N_6	I/O L31N_6	I/O L26P_6	I/O L26N_6	I/O L25P_6 ◆	I/O L25N_6 ◆	I/O L29N_6	VCCO_6	VCCINT	VCCINT	VCCINT	GND
Y	I/O L24P_6	I/O L24N_6 VREF_6	I/O L45P_6 ◆	I/O L45N_6 ◆	I/O L22P_6	I/O L22N_6	I/O L21P_6	I/O L21N_6	VCCO_6	I/O L20P_6	VCCINT	VCCO_5	VCCO_5	VCCO_5	VCCINT
AA	GND	I/O L19P_6	I/O L19N_6	VCCAUX	GND	I/O L17P_6 VREF_6	I/O L17N_6	GND	I/O L16P_6	I/O L20N_6	I/O	I/O L22P_5	I/O L22N_5	I/O L26P_5	I/O
AB	I/O L15P_6	I/O L15N_6	VCCO_6	I/O L14P_6	I/O L14N_6	I/O	VCCO_6	I/O L16N_6	I/O L08P_5	I/O	VCCO_5	I/O L17N_5	I/O L23P_5	I/O L26N_5	I/O L29P_5 VREF_5
AC	I/O L13P_6 VREF_6	I/O L13N_6	I/O L11P_6	I/O L11N_6	I/O L10P_6	I/O L10N_6	I/O L09P_6	I/O L36P_5 ◆	I/O L08N_5	GND	I/O L17P_5	I/O L18P_5	I/O L23N_5	GND	I/O L29N_5
AD	I/O L08P_6	I/O L08N_6	I/O L07P_6	I/O L07N_6	VCCO_6	I/O L09N_6 VREF_6	I/O L05P_5	I/O L36N_5 ◆	VCCO_5	I/O L13P_5	I/O L13N_5	I/O L18N_5	VCCO_5	I/O L30P_5	I/O L30N_5
AE	GND	I/O L06P_6	I/O L06N_6	VCCAUX	I/O L05P_6	I/O	I/O L05N_5	I/O L37P_5 ◆	I/O L11P_5	I/O L11N_5 VREF_5	I/O L14P_5	I/O L19P_5 VREF_5	I/O L27P_5	I/O L27N_5 VREF_5	I/O
AF	I/O L04P_6	I/O L04N_6	VCCO_6	I/O L05N_6	GND	I/O L03N_5	VCCO_5	I/O L37N_5 ◆	I/O L09P_5	GND	I/O L14N_5	I/O L19N_5	I/O L24P_5	GND	I/O L31P_5 D5
AG	I/O L03P_6	I/O L03N_6 VREF_6	I/O L02P_6	I/O L02N_6	I/O L03P_5	VCCAUX	I/O L06P_5	I/O L38P_5 ◆	I/O L09N_5	VCCAUX	I/O L15P_5	I/O L20P_5	I/O L24N_5	VCCAUX	I/O L31N_5 D4
AH	I/O L01P_6 VRN_6	I/O L01N_6 VRP_6	M1	IO VREF_5	VCCO_5	I/O L04P_5	I/O L06N_5	I/O L38N_5 ◆	VCCO_5	I/O L12P_5	I/O L15N_5	I/O L20N_5	VCCO_5	I/O L28P_5 D7	I/O L32P_5 GCLK2
AJ	GND	GND	M0	I/O L01P_5 CS_B	I/O L02P_5	I/O L04N_5	I/O L35P_5 ◆	I/O L07P_5	I/O L10P_5 VRN_5	I/O L12N_5	I/O L16P_5	I/O L21P_5	I/O L25P_5	I/O L28N_5 D6	I/O L32N_5 GCLK3
AK	GND	GND	M2	I/O L01N_5 RDWR_B	I/O L02N_5	GND	I/O L35N_5 ◆	I/O L07N_5	I/O L10N_5 VRP_5	GND	I/O L16N_5	I/O L21N_5	I/O L25N_5	GND	IO VREF_5

Bank 7 (rows A–H)
Bank 6 (rows T–AH)
Bank 5 (rows AJ–AK)

DS099-4_13a_121103

Figure 55: **FG900 Package Footprint (Top View)**

Right Half of FG900 Package (Top View)

	16	17	18	19	20	21	22	23	24	25	26	27	28	29	30	
Bank 1																
A	I/O	GND	I/O L39N_1 ◆	I/O L26N_1	I/O L21N_1	GND	I/O L15N_1	I/O L11N_1	I/O L07N_1	GND	I/O L03N_1	I/O L01N_1 VRP_1	TMS	GND	GND	
B	I/O L32N_1 GCLK5	I/O L28N_1	I/O L39P_1 ◆	I/O L26P_1	I/O L21P_1	I/O L17N_1 VREF_1	I/O L15P_1	I/O L11P_1	I/O L07P_1	I/O L04N_1	I/O L03P_1	I/O L01P_1 VRN_1	TCK	GND	GND	
C	I/O L32P_1 GCLK4	I/O L28P_1	VCCO_1	I/O L25N_1	I/O L20N_1	I/O L17P_1	VCCO_1	I/O L10N_1 VREF_1	I/O L06N_1 VREF_1	I/O L04P_1	VCCO_1	I/O L02P_1	TDO	I/O L01N_2 VRP_2	I/O L01P_2 VRN_2	
D	I/O L31N_1 VREF_1	VCCAUX	I/O L38N_1 ◆	I/O L25P_1	I/O L20P_1	VCCAUX	I/O L14N_1	I/O L10P_1	I/O L06P_1	VCCAUX	I/O L02N_1	I/O L02N_2	I/O L02P_2	I/O L03N_2 VREF_2	I/O L03P_2	
E	I/O L31P_1	GND	I/O L38P_1 ◆	I/O L24N_1	I/O L19N_1	GND	I/O L14P_1	I/O L13P_1	VCCO_1	I/O	GND	I/O L41N_2 ◆	VCCO_2	I/O L04N_2	I/O L04P_2	
F	I/O	I/O L27N_1	I/O	I/O L24P_1	I/O L19P_1	I/O L16N_1	I/O L13N_1	I/O L09N_1	I/O L05N_1	I/O L05P_1	I/O L41P_2 ◆	VCCAUX	I/O L05N_2	I/O L05P_2	GND	
G	I/O L30N_1	I/O L27P_1	VCCO_1	I/O L23N_1	I/O L18N_1	I/O L16P_1	VCCO_1	I/O L09P_1	I/O L08P_1	I/O L08N_2	VCCO_2	I/O L06N_2	I/O L06P_2	I/O L07N_2	I/O L07P_2	
H	I/O L30P_1	GND	I/O L37N_1 ◆	I/O L23P_1	I/O L18P_1	GND	I/O L12N_1	I/O L08N_1	I/O L08P_2	I/O L09N_2 VREF_2	I/O L09P_2	I/O L10N_2	I/O L10P_2	I/O L12N_2	I/O L12P_2	
J	I/O L29N_1	IO VREF_1	I/O L37P_1 ◆	I/O L22N_1	VCCO_1	I/O	I/O L12P_1	I/O L15N_2	VCCO_2	I/O	I/O L13N_2	I/O L13P_2 VREF_2	VCCO_2	I/O L14N_2	I/O L14P_2	Bank 2
K	I/O L29P_1	I/O L40N_1 ◆	I/O L40P_1 ◆	I/O L22P_1	I/O	I/O L46N_2 ◆	I/O L15P_2	GND	I/O L16N_2	I/O L16P_2	GND	VCCAUX	I/O L45N_2 ◆	I/O L45P_2 ◆	GND	
L	VCCINT	VCCO_1	VCCO_1	VCCO_1	VCCINT	I/O L46P_2 ◆	VCCO_2	I/O L47N_2 ◆	I/O L47P_2 ◆	I/O L19N_2	I/O L19P_2	I/O L20N_2	I/O L20P_2	I/O L21N_2	I/O L21P_2	
M	GND	VCCINT	VCCINT	VCCINT	VCCO_2	I/O L26N_2	I/O L22N_2	I/O L22P_2	I/O L23N_2 VREF_2	I/O L23P_2	I/O L28N_2	I/O L24N_2	I/O L24P_2	I/O L50N_2 ◆	I/O L50P_2 ◆	
N	GND	GND	GND	VCCINT	VCCO_2	I/O L26P_2	I/O L27N_2	I/O L27P_2	VCCO_2	I/O L28P_2	I/O L29N_2	I/O L29P_2	VCCO_2	I/O L31N_2	I/O L31P_2	
P	GND	GND	GND	VCCINT	VCCO_2	I/O L32N_2	I/O L32P_2	GND	I/O L33N_2	I/O L33P_2	GND	VCCAUX	I/O L34N_2 VREF_2	I/O L34P_2	GND	
R	GND	GND	GND	GND	VCCINT	I/O L35N_2	I/O L35P_2	I/O L37N_2	I/O L37P_2	I/O L38N_2	I/O L38P_2	I/O L39N_2	I/O L39P_2	I/O L40N_2	I/O L40P_2 VREF_2	
T	GND	GND	GND	GND	VCCINT	I/O L35P_3	I/O L35N_3	I/O L37P_3	I/O L37N_3	I/O L38P_3	I/O L38N_3	I/O L39P_3	I/O L39N_3	I/O L40P_3	I/O L40N_3 VREF_3	
U	GND	GND	GND	VCCINT	VCCO_3	I/O L32P_3	I/O L32N_3	GND	I/O L33P_3	I/O L33N_3	GND	VCCAUX	I/O L34P_3 VREF_3	I/O L34N_3	GND	
V	GND	GND	GND	VCCINT	VCCO_3	I/O L27N_3	I/O L28P_3	I/O L28N_3	VCCO_3	I/O L29N_3	I/O L50P_3 ◆	I/O L50N_3 ◆	VCCO_3	I/O L31P_3	I/O L31N_3	
W	GND	VCCINT	VCCINT	VCCINT	VCCO_3	I/O L27P_3	I/O L46P_3 ◆	I/O L46N_3 ◆	I/O L47P_3 ◆	I/O L47N_3 ◆	I/O L29P_3	I/O L48P_3 ◆	I/O L48N_3 ◆	I/O L26P_3	I/O L26N_3	
Y	VCCINT	VCCO_4	VCCO_4	VCCO_4	VCCINT	I/O L20N_3	VCCO_3	I/O L21P_3	I/O L21N_3	I/O L22P_3	I/O L22N_3	I/O L23P_3 VREF_3	I/O L23N_3	I/O L24P_3	I/O L24N_3	
AA	I/O	I/O L26N_4	I/O	I/O L18N_4	I/O L13P_4	I/O L20P_3	I/O L16N_3	GND	I/O L17P_3 VREF_3	I/O L17N_3	GND	VCCAUX	I/O L19P_3	I/O L19N_3	GND	
AB	I/O L29N_4	I/O L26P_4 VREF_4	I/O L23N_4	I/O L18P_4	VCCO_4	I/O L13N_4	I/O L08N_4	I/O L16P_3	VCCO_3	I/O	I/O L14P_3	I/O L14N_3	VCCO_3	I/O L15P_3	I/O L15N_3	Bank 3
AC	I/O L29P_4	GND	I/O L23P_4	I/O L19N_4	I/O L14N_4	GND	I/O L08P_4	I/O L04P_4	I/O L09N_3	I/O L10P_3	I/O L10N_3	I/O L11P_3	I/O L11N_3	I/O L13P_3	I/O L13N_3 VREF_3	
AD	I/O L30N_4 D2	I/O L27N_4 DIN D0	VCCO_4	I/O L19P_4	I/O L14P_4	I/O L11N_4	VCCO_4	I/O	I/O L04N_4	I/O L09P_3 VREF_3	VCCO_3	I/O L07P_3	I/O L07N_3	I/O L08P_3	I/O L08N_3	
AE	I/O L30P_4 D3	I/O L27P_4 D1	I/O L24N_4	I/O L20N_4	I/O L15N_4	I/O L11P_4	I/O	I/O L05N_4	I/O L34P_4 ◆	I/O L34N_4 ◆	I/O L05N_3	VCCAUX	I/O L06P_3	I/O L06N_3	GND	
AF	I/O VREF_4	GND	I/O L24P_4	I/O L20P_4	I/O L15P_4	GND	I/O L09N_4	I/O L05P_4	VCCO_4	I/O L03P_4	GND	I/O L05P_3	VCCO_3	I/O L04P_3	I/O L04N_3	
AG	I/O L31N_4 INIT_B	VCCAUX	I/O	I/O L21N_4	I/O L16N_4	VCCAUX	I/O L09P_4	I/O L06N_4 VREF_4	I/O L35N_4 ◆	VCCAUX	I/O L03N_4	I/O L02P_3	I/O L02N_3 VREF_3	I/O L03P_3	I/O L03N_3	
AH	I/O L31P_4 DOUT BUSY	I/O L28N_4	VCCO_4	I/O L21P_4	I/O L16P_4	I/O L12N_4	VCCO_4	I/O L06P_4	I/O L35P_4 ◆	I/O L33N_4 ◆	VCCO_4	I/O	CCLK	I/O L01P_3 VRN_3	I/O L01N_3 VRP_3	
AJ	I/O L32N_4 GCLK1	I/O L28P_4	I/O L25N_4	I/O L22N_4 VREF_4	I/O L17N_4	I/O L12P_4	I/O L10N_4	I/O L07N_4	I/O L38N_4 ◆	I/O L33P_4 ◆	I/O L02N_4	I/O L01N_4 VRP_4	DONE	GND	GND	
AK	I/O L32P_4 GCLK0	GND	I/O L25P_4	I/O L22P_4	I/O L17P_4	GND	I/O L10P_4	I/O L07P_4	I/O L38P_4 ◆	GND	I/O L02P_4	I/O L01P_4 VRN_4	IO VREF_4	GND	GND	
Bank 4																

DS099-4_13b_121103

Figure 56: FG900 Package Footprint (Top View) Continued

FG1156: 1156-lead Fine-pitch Ball Grid Array

Note: The FG(G)1156 package is discontinued. See http://www.xilinx.com/support/documentation/spartan-3_customer_notices.htm.

The 1,156-lead fine-pitch ball grid array package, FG1156, supports two different Spartan-3 devices, namely the XC3S4000 and the XC3S5000. The XC3S4000, however, has fewer I/O pins, which consequently results in 73 unconnected pins on the FG1156 package, labeled as "N.C." In Table 110 and Figure 53, these unconnected pins are indicated with a black diamond symbol (◆).

The XC3S5000 has a single unconnected package pin, ball AK31, which is also unconnected for the XC3S4000.

All the package pins appear in Table 110 and are sorted by bank number, then by pin name. Pairs of pins that form a differential I/O pair appear together in the table. The table also shows the pin number for each pin and the pin type, as defined earlier.

On ball L29 in I/O Bank 2, the unconnected pin on the XC3S4000 maps to a VREF-type pin on the XC3S5000. If the other VREF_2 pins all connect to a voltage reference to support a special I/O standard, then also connect the N.C. pin on the XC3S4000 to the same VREF_2 voltage.

Pinout Table

Table 110: **FG1156 Package Pinout**

Bank	XC3S4000 Pin Name	XC3S5000 Pin Name	FG1156 Pin Number	Type
0	IO	IO	B9	I/O
0	IO	IO	E17	I/O
0	IO	IO	F6	I/O
0	IO	IO	F8	I/O
0	IO	IO	G12	I/O
0	IO	IO	H8	I/O
0	IO	IO	H9	I/O
0	IO	IO	J11	I/O
0	N.C. (◆)	IO	J9	I/O
0	N.C. (◆)	IO	K11	I/O
0	IO	IO	K13	I/O
0	IO	IO	K16	I/O
0	IO	IO	K17	I/O
0	IO	IO	L13	I/O
0	IO	IO	L16	I/O
0	IO	IO	L17	I/O
0	IO/VREF_0	IO/VREF_0	D5	VREF
0	IO/VREF_0	IO/VREF_0	E10	VREF
0	IO/VREF_0	IO/VREF_0	J14	VREF
0	IO/VREF_0	IO/VREF_0	L15	VREF
0	IO_L01N_0/VRP_0	IO_L01N_0/VRP_0	B3	DCI
0	IO_L01P_0/VRN_0	IO_L01P_0/VRN_0	A3	DCI
0	IO_L02N_0	IO_L02N_0	B4	I/O
0	IO_L02P_0	IO_L02P_0	A4	I/O
0	IO_L03N_0	IO_L03N_0	C5	I/O

Table 110: **FG1156 Package Pinout *(Cont'd)***

Bank	XC3S4000 Pin Name	XC3S5000 Pin Name	FG1156 Pin Number	Type
0	IO_L03P_0	IO_L03P_0	B5	I/O
0	IO_L04N_0	IO_L04N_0	D6	I/O
0	IO_L04P_0	IO_L04P_0	C6	I/O
0	IO_L05N_0	IO_L05N_0	B6	I/O
0	IO_L05P_0/VREF_0	IO_L05P_0/VREF_0	A6	VREF
0	IO_L06N_0	IO_L06N_0	F7	I/O
0	IO_L06P_0	IO_L06P_0	E7	I/O
0	IO_L07N_0	IO_L07N_0	G9	I/O
0	IO_L07P_0	IO_L07P_0	F9	I/O
0	IO_L08N_0	IO_L08N_0	D9	I/O
0	IO_L08P_0	IO_L08P_0	C9	I/O
0	IO_L09N_0	IO_L09N_0	J10	I/O
0	IO_L09P_0	IO_L09P_0	H10	I/O
0	IO_L10N_0	IO_L10N_0	G10	I/O
0	IO_L10P_0	IO_L10P_0	F10	I/O
0	IO_L11N_0	IO_L11N_0	L12	I/O
0	IO_L11P_0	IO_L11P_0	K12	I/O
0	IO_L12N_0	IO_L12N_0	J12	I/O
0	IO_L12P_0	IO_L12P_0	H12	I/O
0	IO_L13N_0	IO_L13N_0	F12	I/O
0	IO_L13P_0	IO_L13P_0	E12	I/O
0	IO_L14N_0	IO_L14N_0	D12	I/O
0	IO_L14P_0	IO_L14P_0	C12	I/O
0	IO_L15N_0	IO_L15N_0	B12	I/O
0	IO_L15P_0	IO_L15P_0	A12	I/O
0	IO_L16N_0	IO_L16N_0	H13	I/O
0	IO_L16P_0	IO_L16P_0	G13	I/O
0	IO_L17N_0	IO_L17N_0	D13	I/O
0	IO_L17P_0	IO_L17P_0	C13	I/O
0	IO_L18N_0	IO_L18N_0	L14	I/O
0	IO_L18P_0	IO_L18P_0	K14	I/O
0	IO_L19N_0	IO_L19N_0	H14	I/O
0	IO_L19P_0	IO_L19P_0	G14	I/O
0	IO_L20N_0	IO_L20N_0	F14	I/O
0	IO_L20P_0	IO_L20P_0	E14	I/O
0	IO_L21N_0	IO_L21N_0	D14	I/O
0	IO_L21P_0	IO_L21P_0	C14	I/O
0	IO_L22N_0	IO_L22N_0	B14	I/O
0	IO_L22P_0	IO_L22P_0	A14	I/O
0	IO_L23N_0	IO_L23N_0	K15	I/O

Table 110: **FG1156 Package Pinout *(Cont'd)***

Bank	XC3S4000 Pin Name	XC3S5000 Pin Name	FG1156 Pin Number	Type
0	IO_L23P_0	IO_L23P_0	J15	I/O
0	IO_L24N_0	IO_L24N_0	G15	I/O
0	IO_L24P_0	IO_L24P_0	F15	I/O
0	IO_L25N_0	IO_L25N_0	D15	I/O
0	IO_L25P_0	IO_L25P_0	C15	I/O
0	IO_L26N_0	IO_L26N_0	B15	I/O
0	IO_L26P_0/VREF_0	IO_L26P_0/VREF_0	A15	VREF
0	IO_L27N_0	IO_L27N_0	G16	I/O
0	IO_L27P_0	IO_L27P_0	F16	I/O
0	IO_L28N_0	IO_L28N_0	C16	I/O
0	IO_L28P_0	IO_L28P_0	B16	I/O
0	IO_L29N_0	IO_L29N_0	J17	I/O
0	IO_L29P_0	IO_L29P_0	H17	I/O
0	IO_L30N_0	IO_L30N_0	G17	I/O
0	IO_L30P_0	IO_L30P_0	F17	I/O
0	IO_L31N_0	IO_L31N_0	D17	I/O
0	IO_L31P_0/VREF_0	IO_L31P_0/VREF_0	C17	VREF
0	IO_L32N_0/GCLK7	IO_L32N_0/GCLK7	B17	GCLK
0	IO_L32P_0/GCLK6	IO_L32P_0/GCLK6	A17	GCLK
0	N.C. (◆)	IO_L33N_0	D7	I/O
0	N.C. (◆)	IO_L33P_0	C7	I/O
0	N.C. (◆)	IO_L34N_0	B7	I/O
0	N.C. (◆)	IO_L34P_0	A7	I/O
0	IO_L35N_0	IO_L35N_0	E8	I/O
0	IO_L35P_0	IO_L35P_0	D8	I/O
0	IO_L36N_0	IO_L36N_0	B8	I/O
0	IO_L36P_0	IO_L36P_0	A8	I/O
0	IO_L37N_0	IO_L37N_0	D10	I/O
0	IO_L37P_0	IO_L37P_0	C10	I/O
0	IO_L38N_0	IO_L38N_0	B10	I/O
0	IO_L38P_0	IO_L38P_0	A10	I/O
0	N.C. (◆)	IO_L39N_0	G11	I/O
0	N.C. (◆)	IO_L39P_0	F11	I/O
0	N.C. (◆)	IO_L40N_0	B11	I/O
0	N.C. (◆)	IO_L40P_0	A11	I/O
0	VCCO_0	VCCO_0	B13	VCCO
0	VCCO_0	VCCO_0	C4	VCCO
0	VCCO_0	VCCO_0	C8	VCCO
0	VCCO_0	VCCO_0	D11	VCCO
0	VCCO_0	VCCO_0	D16	VCCO

Table 110: **FG1156 Package Pinout *(Cont'd)***

Bank	XC3S4000 Pin Name	XC3S5000 Pin Name	FG1156 Pin Number	Type
0	VCCO_0	VCCO_0	F13	VCCO
0	VCCO_0	VCCO_0	G8	VCCO
0	VCCO_0	VCCO_0	H11	VCCO
0	VCCO_0	VCCO_0	H15	VCCO
0	VCCO_0	VCCO_0	M13	VCCO
0	VCCO_0	VCCO_0	M14	VCCO
0	VCCO_0	VCCO_0	M15	VCCO
0	VCCO_0	VCCO_0	M16	VCCO
1	IO	IO	B26	I/O
1	IO	IO	A18	I/O
1	IO	IO	C23	I/O
1	IO	IO	E21	I/O
1	IO	IO	E25	I/O
1	IO	IO	F18	I/O
1	IO	IO	F27	I/O
1	IO	IO	F29	I/O
1	IO	IO	H23	I/O
1	IO	IO	H26	I/O
1	N.C. (◆)	IO	J26	I/O
1	IO	IO	K19	I/O
1	IO	IO	L19	I/O
1	IO	IO	L20	I/O
1	IO	IO	L21	I/O
1	N.C. (◆)	IO	L23	I/O
1	IO	IO	L24	I/O
1	IO/VREF_1	IO/VREF_1	D30	VREF
1	IO/VREF_1	IO/VREF_1	K21	VREF
1	IO/VREF_1	IO/VREF_1	L18	VREF
1	IO_L01N_1/VRP_1	IO_L01N_1/VRP_1	A32	DCI
1	IO_L01P_1/VRN_1	IO_L01P_1/VRN_1	B32	DCI
1	IO_L02N_1	IO_L02N_1	A31	I/O
1	IO_L02P_1	IO_L02P_1	B31	I/O
1	IO_L03N_1	IO_L03N_1	B30	I/O
1	IO_L03P_1	IO_L03P_1	C30	I/O
1	IO_L04N_1	IO_L04N_1	C29	I/O
1	IO_L04P_1	IO_L04P_1	D29	I/O
1	IO_L05N_1	IO_L05N_1	A29	I/O
1	IO_L05P_1	IO_L05P_1	B29	I/O
1	IO_L06N_1/VREF_1	IO_L06N_1/VREF_1	E28	VREF
1	IO_L06P_1	IO_L06P_1	F28	I/O

Table 110: **FG1156 Package Pinout *(Cont'd)***

Bank	XC3S4000 Pin Name	XC3S5000 Pin Name	FG1156 Pin Number	Type
1	IO_L07N_1	IO_L07N_1	D27	I/O
1	IO_L07P_1	IO_L07P_1	E27	I/O
1	IO_L08N_1	IO_L08N_1	A27	I/O
1	IO_L08P_1	IO_L08P_1	B27	I/O
1	IO_L09N_1	IO_L09N_1	F26	I/O
1	IO_L09P_1	IO_L09P_1	G26	I/O
1	IO_L10N_1/VREF_1	IO_L10N_1/VREF_1	C26	VREF
1	IO_L10P_1	IO_L10P_1	D26	I/O
1	IO_L11N_1	IO_L11N_1	H25	I/O
1	IO_L11P_1	IO_L11P_1	J25	I/O
1	IO_L12N_1	IO_L12N_1	F25	I/O
1	IO_L12P_1	IO_L12P_1	G25	I/O
1	IO_L13N_1	IO_L13N_1	C25	I/O
1	IO_L13P_1	IO_L13P_1	D25	I/O
1	IO_L14N_1	IO_L14N_1	A25	I/O
1	IO_L14P_1	IO_L14P_1	B25	I/O
1	IO_L15N_1	IO_L15N_1	A24	I/O
1	IO_L15P_1	IO_L15P_1	B24	I/O
1	IO_L16N_1	IO_L16N_1	J23	I/O
1	IO_L16P_1	IO_L16P_1	K23	I/O
1	IO_L17N_1/VREF_1	IO_L17N_1/VREF_1	F23	VREF
1	IO_L17P_1	IO_L17P_1	G23	I/O
1	IO_L18N_1	IO_L18N_1	D23	I/O
1	IO_L18P_1	IO_L18P_1	E23	I/O
1	IO_L19N_1	IO_L19N_1	A23	I/O
1	IO_L19P_1	IO_L19P_1	B23	I/O
1	IO_L20N_1	IO_L20N_1	K22	I/O
1	IO_L20P_1	IO_L20P_1	L22	I/O
1	IO_L21N_1	IO_L21N_1	G22	I/O
1	IO_L21P_1	IO_L21P_1	H22	I/O
1	IO_L22N_1	IO_L22N_1	C22	I/O
1	IO_L22P_1	IO_L22P_1	D22	I/O
1	IO_L23N_1	IO_L23N_1	H21	I/O
1	IO_L23P_1	IO_L23P_1	J21	I/O
1	IO_L24N_1	IO_L24N_1	F21	I/O
1	IO_L24P_1	IO_L24P_1	G21	I/O
1	IO_L25N_1	IO_L25N_1	C21	I/O
1	IO_L25P_1	IO_L25P_1	D21	I/O
1	IO_L26N_1	IO_L26N_1	A21	I/O
1	IO_L26P_1	IO_L26P_1	B21	I/O

Table 110: **FG1156 Package Pinout *(Cont'd)***

Bank	XC3S4000 Pin Name	XC3S5000 Pin Name	FG1156 Pin Number	Type
1	IO_L27N_1	IO_L27N_1	F19	I/O
1	IO_L27P_1	IO_L27P_1	G19	I/O
1	IO_L28N_1	IO_L28N_1	B19	I/O
1	IO_L28P_1	IO_L28P_1	C19	I/O
1	IO_L29N_1	IO_L29N_1	J18	I/O
1	IO_L29P_1	IO_L29P_1	K18	I/O
1	IO_L30N_1	IO_L30N_1	G18	I/O
1	IO_L30P_1	IO_L30P_1	H18	I/O
1	IO_L31N_1/VREF_1	IO_L31N_1/VREF_1	D18	VREF
1	IO_L31P_1	IO_L31P_1	E18	I/O
1	IO_L32N_1/GCLK5	IO_L32N_1/GCLK5	B18	GCLK
1	IO_L32P_1/GCLK4	IO_L32P_1/GCLK4	C18	GCLK
1	N.C. (◆)	IO_L33N_1	C28	I/O
1	N.C. (◆)	IO_L33P_1	D28	I/O
1	N.C. (◆)	IO_L34N_1	A28	I/O
1	N.C. (◆)	IO_L34P_1	B28	I/O
1	N.C. (◆)	IO_L35N_1	J24	I/O
1	N.C. (◆)	IO_L35P_1	K24	I/O
1	N.C. (◆)	IO_L36N_1	F24	I/O
1	N.C. (◆)	IO_L36P_1	G24	I/O
1	IO_L37N_1	IO_L37N_1	J20	I/O
1	IO_L37P_1	IO_L37P_1	K20	I/O
1	IO_L38N_1	IO_L38N_1	F20	I/O
1	IO_L38P_1	IO_L38P_1	G20	I/O
1	IO_L39N_1	IO_L39N_1	C20	I/O
1	IO_L39P_1	IO_L39P_1	D20	I/O
1	IO_L40N_1	IO_L40N_1	A20	I/O
1	IO_L40P_1	IO_L40P_1	B20	I/O
1	VCCO_1	VCCO_1	B22	VCCO
1	VCCO_1	VCCO_1	C27	VCCO
1	VCCO_1	VCCO_1	C31	VCCO
1	VCCO_1	VCCO_1	D19	VCCO
1	VCCO_1	VCCO_1	D24	VCCO
1	VCCO_1	VCCO_1	F22	VCCO
1	VCCO_1	VCCO_1	G27	VCCO
1	VCCO_1	VCCO_1	H20	VCCO
1	VCCO_1	VCCO_1	H24	VCCO
1	VCCO_1	VCCO_1	M19	VCCO
1	VCCO_1	VCCO_1	M20	VCCO
1	VCCO_1	VCCO_1	M21	VCCO

Table 110: **FG1156 Package Pinout *(Cont'd)***

Bank	XC3S4000 Pin Name	XC3S5000 Pin Name	FG1156 Pin Number	Type
1	VCCO_1	VCCO_1	M22	VCCO
2	IO	IO	G33	I/O
2	IO	IO	G34	I/O
2	IO	IO	U25	I/O
2	IO	IO	U26	I/O
2	IO_L01N_2/VRP_2	IO_L01N_2/VRP_2	C33	DCI
2	IO_L01P_2/VRN_2	IO_L01P_2/VRN_2	C34	DCI
2	IO_L02N_2	IO_L02N_2	D33	I/O
2	IO_L02P_2	IO_L02P_2	D34	I/O
2	IO_L03N_2/VREF_2	IO_L03N_2/VREF_2	E32	VREF
2	IO_L03P_2	IO_L03P_2	E33	I/O
2	IO_L04N_2	IO_L04N_2	F31	I/O
2	IO_L04P_2	IO_L04P_2	F32	I/O
2	IO_L05N_2	IO_L05N_2	G29	I/O
2	IO_L05P_2	IO_L05P_2	G30	I/O
2	IO_L06N_2	IO_L06N_2	H29	I/O
2	IO_L06P_2	IO_L06P_2	H30	I/O
2	IO_L07N_2	IO_L07N_2	H33	I/O
2	IO_L07P_2	IO_L07P_2	H34	I/O
2	IO_L08N_2	IO_L08N_2	J28	I/O
2	IO_L08P_2	IO_L08P_2	J29	I/O
2	IO_L09N_2/VREF_2	IO_L09N_2/VREF_2	H31	VREF
2	IO_L09P_2	IO_L09P_2	J31	I/O
2	IO_L10N_2	IO_L10N_2	J32	I/O
2	IO_L10P_2	IO_L10P_2	J33	I/O
2	IO_L11N_2	IO_L11N_2	J27	I/O
2	IO_L11P_2	IO_L11P_2	K26	I/O
2	IO_L12N_2	IO_L12N_2	K27	I/O
2	IO_L12P_2	IO_L12P_2	K28	I/O
2	IO_L13N_2	IO_L13N_2	K29	I/O
2	IO_L13P_2/VREF_2	IO_L13P_2/VREF_2	K30	VREF
2	IO_L14N_2	IO_L14N_2	K31	I/O
2	IO_L14P_2	IO_L14P_2	K32	I/O
2	IO_L15N_2	IO_L15N_2	K33	I/O
2	IO_L15P_2	IO_L15P_2	K34	I/O
2	IO_L16N_2	IO_L16N_2	L25	I/O
2	IO_L16P_2	IO_L16P_2	L26	I/O
2	N.C. (◆)	IO_L17N_2	L28	I/O
2	N.C. (◆)	IO_L17P_2/ VREF_2	L29	VREF

Table 110: **FG1156 Package Pinout *(Cont'd)***

Bank	XC3S4000 Pin Name	XC3S5000 Pin Name	FG1156 Pin Number	Type
2	IO_L19N_2	IO_L19N_2	M29	I/O
2	IO_L19P_2	IO_L19P_2	M30	I/O
2	IO_L20N_2	IO_L20N_2	M31	I/O
2	IO_L20P_2	IO_L20P_2	M32	I/O
2	IO_L21N_2	IO_L21N_2	M26	I/O
2	IO_L21P_2	IO_L21P_2	N25	I/O
2	IO_L22N_2	IO_L22N_2	N27	I/O
2	IO_L22P_2	IO_L22P_2	N28	I/O
2	IO_L23N_2/VREF_2	IO_L23N_2VREF_2	N31	VREF
2	IO_L23P_2	IO_L23P_2	N32	I/O
2	IO_L24N_2	IO_L24N_2	N24	I/O
2	IO_L24P_2	IO_L24P_2	P24	I/O
2	IO_L26N_2	IO_L26N_2	P29	I/O
2	IO_L26P_2	IO_L26P_2	P30	I/O
2	IO_L27N_2	IO_L27N_2	P31	I/O
2	IO_L27P_2	IO_L27P_2	P32	I/O
2	IO_L28N_2	IO_L28N_2	P33	I/O
2	IO_L28P_2	IO_L28P_2	P34	I/O
2	IO_L29N_2	IO_L29N_2	R24	I/O
2	IO_L29P_2	IO_L29P_2	R25	I/O
2	IO_L30N_2	IO_L30N_2	R28	I/O
2	IO_L30P_2	IO_L30P_2	R29	I/O
2	IO_L31N_2	IO_L31N_2	R31	I/O
2	IO_L31P_2	IO_L31P_2	R32	I/O
2	IO_L32N_2	IO_L32N_2	R33	I/O
2	IO_L32P_2	IO_L32P_2	R34	I/O
2	IO_L33N_2	IO_L33N_2	R26	I/O
2	IO_L33P_2	IO_L33P_2	T25	I/O
2	IO_L34N_2/VREF_2	IO_L34N_2/VREF_2	T28	VREF
2	IO_L34P_2	IO_L34P_2	T29	I/O
2	IO_L35N_2	IO_L35N_2	T32	I/O
2	IO_L35P_2	IO_L35P_2	T33	I/O
2	IO_L37N_2	IO_L37N_2	U27	I/O
2	IO_L37P_2	IO_L37P_2	U28	I/O
2	IO_L38N_2	IO_L38N_2	U29	I/O
2	IO_L38P_2	IO_L38P_2	U30	I/O
2	IO_L39N_2	IO_L39N_2	U31	I/O
2	IO_L39P_2	IO_L39P_2	U32	I/O
2	IO_L40N_2	IO_L40N_2	U33	I/O
2	IO_L40P_2/VREF_2	IO_L40P_2/VREF_2	U34	VREF

Table 110: **FG1156 Package Pinout *(Cont'd)***

Bank	XC3S4000 Pin Name	XC3S5000 Pin Name	FG1156 Pin Number	Type
2	IO_L41N_2	IO_L41N_2	F33	I/O
2	IO_L41P_2	IO_L41P_2	F34	I/O
2	N.C. (◆)	IO_L42N_2	G31	I/O
2	N.C. (◆)	IO_L42P_2	G32	I/O
2	IO_L45N_2	IO_L45N_2	L33	I/O
2	IO_L45P_2	IO_L45P_2	L34	I/O
2	IO_L46N_2	IO_L46N_2	M24	I/O
2	IO_L46P_2	IO_L46P_2	M25	I/O
2	IO_L47N_2	IO_L47N_2	M27	I/O
2	IO_L47P_2	IO_L47P_2	M28	I/O
2	IO_L48N_2	IO_L48N_2	M33	I/O
2	IO_L48P_2	IO_L48P_2	M34	I/O
2	N.C. (◆)	IO_L49N_2	P25	I/O
2	N.C. (◆)	IO_L49P_2	P26	I/O
2	IO_L50N_2	IO_L50N_2	P27	I/O
2	IO_L50P_2	IO_L50P_2	P28	I/O
2	N.C. (◆)	IO_L51N_2	T24	I/O
2	N.C. (◆)	IO_L51P_2	U24	I/O
2	VCCO_2	VCCO_2	D32	VCCO
2	VCCO_2	VCCO_2	H28	VCCO
2	VCCO_2	VCCO_2	H32	VCCO
2	VCCO_2	VCCO_2	L27	VCCO
2	VCCO_2	VCCO_2	L31	VCCO
2	VCCO_2	VCCO_2	N23	VCCO
2	VCCO_2	VCCO_2	N29	VCCO
2	VCCO_2	VCCO_2	N33	VCCO
2	VCCO_2	VCCO_2	P23	VCCO
2	VCCO_2	VCCO_2	R23	VCCO
2	VCCO_2	VCCO_2	R27	VCCO
2	VCCO_2	VCCO_2	T23	VCCO
2	VCCO_2	VCCO_2	T31	VCCO
3	IO	IO	AH33	I/O
3	IO	IO	AH34	I/O
3	IO	IO	V25	I/O
3	IO	IO	V26	I/O
3	IO_L01N_3/VRP_3	IO_L01N_3/VRP_3	AM34	DCI
3	IO_L01P_3/VRN_3	IO_L01P_3/VRN_3	AM33	DCI
3	IO_L02N_3/VREF_3	IO_L02N_3/VREF_3	AL34	VREF
3	IO_L02P_3	IO_L02P_3	AL33	I/O
3	IO_L03N_3	IO_L03N_3	AK33	I/O

Table 110: **FG1156 Package Pinout *(Cont'd)***

Bank	XC3S4000 Pin Name	XC3S5000 Pin Name	FG1156 Pin Number	Type
3	IO_L03P_3	IO_L03P_3	AK32	I/O
3	IO_L04N_3	IO_L04N_3	AJ32	I/O
3	IO_L04P_3	IO_L04P_3	AJ31	I/O
3	IO_L05N_3	IO_L05N_3	AJ34	I/O
3	IO_L05P_3	IO_L05P_3	AJ33	I/O
3	IO_L06N_3	IO_L06N_3	AH30	I/O
3	IO_L06P_3	IO_L06P_3	AH29	I/O
3	IO_L07N_3	IO_L07N_3	AG30	I/O
3	IO_L07P_3	IO_L07P_3	AG29	I/O
3	IO_L08N_3	IO_L08N_3	AG34	I/O
3	IO_L08P_3	IO_L08P_3	AG33	I/O
3	IO_L09N_3	IO_L09N_3	AF29	I/O
3	IO_L09P_3/VREF_3	IO_L09P_3/VREF_3	AF28	VREF
3	IO_L10N_3	IO_L10N_3	AF31	I/O
3	IO_L10P_3	IO_L10P_3	AG31	I/O
3	IO_L11N_3	IO_L11N_3	AF33	I/O
3	IO_L11P_3	IO_L11P_3	AF32	I/O
3	IO_L12N_3	IO_L12N_3	AE26	I/O
3	IO_L12P_3	IO_L12P_3	AF27	I/O
3	IO_L13N_3/VREF_3	IO_L13N_3/VREF_3	AE28	VREF
3	IO_L13P_3	IO_L13P_3	AE27	I/O
3	IO_L14N_3	IO_L14N_3	AE30	I/O
3	IO_L14P_3	IO_L14P_3	AE29	I/O
3	IO_L15N_3	IO_L15N_3	AE32	I/O
3	IO_L15P_3	IO_L15P_3	AE31	I/O
3	IO_L16N_3	IO_L16N_3	AE34	I/O
3	IO_L16P_3	IO_L16P_3	AE33	I/O
3	IO_L17N_3	IO_L17N_3	AD26	I/O
3	IO_L17P_3/VREF_3	IO_L17P_3/VREF_3	AD25	VREF
3	IO_L19N_3	IO_L19N_3	AD34	I/O
3	IO_L19P_3	IO_L19P_3	AD33	I/O
3	IO_L20N_3	IO_L20N_3	AC25	I/O
3	IO_L20P_3	IO_L20P_3	AC24	I/O
3	IO_L21N_3	IO_L21N_3	AC28	I/O
3	IO_L21P_3	IO_L21P_3	AC27	I/O
3	IO_L22N_3	IO_L22N_3	AC30	I/O
3	IO_L22P_3	IO_L22P_3	AC29	I/O
3	IO_L23N_3	IO_L23N_3	AC32	I/O
3	IO_L23P_3/VREF_3	IO_L23P_3/VREF_3	AC31	VREF
3	IO_L24N_3	IO_L24N_3	AB25	I/O

Table 110: **FG1156 Package Pinout *(Cont'd)***

Bank	XC3S4000 Pin Name	XC3S5000 Pin Name	FG1156 Pin Number	Type
3	IO_L24P_3	IO_L24P_3	AC26	I/O
3	IO_L26N_3	IO_L26N_3	AA28	I/O
3	IO_L26P_3	IO_L26P_3	AA27	I/O
3	IO_L27N_3	IO_L27N_3	AA30	I/O
3	IO_L27P_3	IO_L27P_3	AA29	I/O
3	IO_L28N_3	IO_L28N_3	AA32	I/O
3	IO_L28P_3	IO_L28P_3	AA31	I/O
3	IO_L29N_3	IO_L29N_3	AA34	I/O
3	IO_L29P_3	IO_L29P_3	AA33	I/O
3	IO_L30N_3	IO_L30N_3	Y29	I/O
3	IO_L30P_3	IO_L30P_3	Y28	I/O
3	IO_L31N_3	IO_L31N_3	Y32	I/O
3	IO_L31P_3	IO_L31P_3	Y31	I/O
3	IO_L32N_3	IO_L32N_3	Y34	I/O
3	IO_L32P_3	IO_L32P_3	Y33	I/O
3	IO_L33N_3	IO_L33N_3	W25	I/O
3	IO_L33P_3	IO_L33P_3	Y26	I/O
3	IO_L34N_3	IO_L34N_3	W29	I/O
3	IO_L34P_3/VREF_3	IO_L34P_3/VREF_3	W28	VREF
3	IO_L35N_3	IO_L35N_3	W33	I/O
3	IO_L35P_3	IO_L35P_3	W32	I/O
3	IO_L37N_3	IO_L37N_3	V28	I/O
3	IO_L37P_3	IO_L37P_3	V27	I/O
3	IO_L38N_3	IO_L38N_3	V30	I/O
3	IO_L38P_3	IO_L38P_3	V29	I/O
3	IO_L39N_3	IO_L39N_3	V32	I/O
3	IO_L39P_3	IO_L39P_3	V31	I/O
3	IO_L40N_3/VREF_3	IO_L40N_3/VREF_3	V34	VREF
3	IO_L40P_3	IO_L40P_3	V33	I/O
3	N.C. (◆)	IO_L41N_3	AH32	I/O
3	N.C. (◆)	IO_L41P_3	AH31	I/O
3	N.C. (◆)	IO_L44N_3	AD29	I/O
3	N.C. (◆)	IO_L44P_3	AD28	I/O
3	IO_L45N_3	IO_L45N_3	AC34	I/O
3	IO_L45P_3	IO_L45P_3	AC33	I/O
3	IO_L46N_3	IO_L46N_3	AB28	I/O
3	IO_L46P_3	IO_L46P_3	AB27	I/O
3	IO_L47N_3	IO_L47N_3	AB32	I/O
3	IO_L47P_3	IO_L47P_3	AB31	I/O
3	IO_L48N_3	IO_L48N_3	AA24	I/O

Table 110: **FG1156 Package Pinout *(Cont'd)***

Bank	XC3S4000 Pin Name	XC3S5000 Pin Name	FG1156 Pin Number	Type
3	IO_L48P_3	IO_L48P_3	AB24	I/O
3	N.C. (◆)	IO_L49N_3	AA26	I/O
3	N.C. (◆)	IO_L49P_3	AA25	I/O
3	IO_L50N_3	IO_L50N_3	Y25	I/O
3	IO_L50P_3	IO_L50P_3	Y24	I/O
3	N.C. (◆)	IO_L51N_3	V24	I/O
3	N.C. (◆)	IO_L51P_3	W24	I/O
3	VCCO_3	VCCO_3	AA23	VCCO
3	VCCO_3	VCCO_3	AB23	VCCO
3	VCCO_3	VCCO_3	AB29	VCCO
3	VCCO_3	VCCO_3	AB33	VCCO
3	VCCO_3	VCCO_3	AD27	VCCO
3	VCCO_3	VCCO_3	AD31	VCCO
3	VCCO_3	VCCO_3	AG28	VCCO
3	VCCO_3	VCCO_3	AG32	VCCO
3	VCCO_3	VCCO_3	AL32	VCCO
3	VCCO_3	VCCO_3	W23	VCCO
3	VCCO_3	VCCO_3	W31	VCCO
3	VCCO_3	VCCO_3	Y23	VCCO
3	VCCO_3	VCCO_3	Y27	VCCO
4	IO	IO	AD18	I/O
4	IO	IO	AD19	I/O
4	IO	IO	AD20	I/O
4	IO	IO	AD22	I/O
4	IO	IO	AE18	I/O
4	IO	IO	AE19	I/O
4	IO	IO	AE22	I/O
4	N.C. (◆)	IO	AE24	I/O
4	IO	IO	AF24	I/O
4	N.C. (◆)	IO	AF26	I/O
4	IO	IO	AG26	I/O
4	IO	IO	AG27	I/O
4	IO	IO	AJ27	I/O
4	IO	IO	AJ29	I/O
4	IO	IO	AK25	I/O
4	IO	IO	AN26	I/O
4	IO/VREF_4	IO/VREF_4	AF21	VREF
4	IO/VREF_4	IO/VREF_4	AH23	VREF
4	IO/VREF_4	IO/VREF_4	AK18	VREF
4	IO/VREF_4	IO/VREF_4	AL30	VREF

Table 110: **FG1156 Package Pinout *(Cont'd)***

Bank	XC3S4000 Pin Name	XC3S5000 Pin Name	FG1156 Pin Number	Type
4	IO_L01N_4/VRP_4	IO_L01N_4/VRP_4	AN32	DCI
4	IO_L01P_4/VRN_4	IO_L01P_4/VRN_4	AP32	DCI
4	IO_L02N_4	IO_L02N_4	AN31	I/O
4	IO_L02P_4	IO_L02P_4	AP31	I/O
4	IO_L03N_4	IO_L03N_4	AM30	I/O
4	IO_L03P_4	IO_L03P_4	AN30	I/O
4	IO_L04N_4	IO_L04N_4	AN27	I/O
4	IO_L04P_4	IO_L04P_4	AP27	I/O
4	IO_L05N_4	IO_L05N_4	AH26	I/O
4	IO_L05P_4	IO_L05P_4	AJ26	I/O
4	IO_L06N_4/VREF_4	IO_L06N_4/VREF_4	AL26	VREF
4	IO_L06P_4	IO_L06P_4	AM26	I/O
4	IO_L07N_4	IO_L07N_4	AF25	I/O
4	IO_L07P_4	IO_L07P_4	AG25	I/O
4	IO_L08N_4	IO_L08N_4	AH25	I/O
4	IO_L08P_4	IO_L08P_4	AJ25	I/O
4	IO_L09N_4	IO_L09N_4	AL25	I/O
4	IO_L09P_4	IO_L09P_4	AM25	I/O
4	IO_L10N_4	IO_L10N_4	AN25	I/O
4	IO_L10P_4	IO_L10P_4	AP25	I/O
4	IO_L11N_4	IO_L11N_4	AD23	I/O
4	IO_L11P_4	IO_L11P_4	AE23	I/O
4	IO_L12N_4	IO_L12N_4	AF23	I/O
4	IO_L12P_4	IO_L12P_4	AG23	I/O
4	IO_L13N_4	IO_L13N_4	AJ23	I/O
4	IO_L13P_4	IO_L13P_4	AK23	I/O
4	IO_L14N_4	IO_L14N_4	AL23	I/O
4	IO_L14P_4	IO_L14P_4	AM23	I/O
4	IO_L15N_4	IO_L15N_4	AN23	I/O
4	IO_L15P_4	IO_L15P_4	AP23	I/O
4	IO_L16N_4	IO_L16N_4	AG22	I/O
4	IO_L16P_4	IO_L16P_4	AH22	I/O
4	IO_L17N_4	IO_L17N_4	AL22	I/O
4	IO_L17P_4	IO_L17P_4	AM22	I/O
4	IO_L18N_4	IO_L18N_4	AD21	I/O
4	IO_L18P_4	IO_L18P_4	AE21	I/O
4	IO_L19N_4	IO_L19N_4	AG21	I/O
4	IO_L19P_4	IO_L19P_4	AH21	I/O
4	IO_L20N_4	IO_L20N_4	AJ21	I/O
4	IO_L20P_4	IO_L20P_4	AK21	I/O

Table 110: **FG1156 Package Pinout *(Cont'd)***

Bank	XC3S4000 Pin Name	XC3S5000 Pin Name	FG1156 Pin Number	Type
4	IO_L21N_4	IO_L21N_4	AL21	I/O
4	IO_L21P_4	IO_L21P_4	AM21	I/O
4	IO_L22N_4/VREF_4	IO_L22N_4/VREF_4	AN21	VREF
4	IO_L22P_4	IO_L22P_4	AP21	I/O
4	IO_L23N_4	IO_L23N_4	AE20	I/O
4	IO_L23P_4	IO_L23P_4	AF20	I/O
4	IO_L24N_4	IO_L24N_4	AH20	I/O
4	IO_L24P_4	IO_L24P_4	AJ20	I/O
4	IO_L25N_4	IO_L25N_4	AL20	I/O
4	IO_L25P_4	IO_L25P_4	AM20	I/O
4	IO_L26N_4	IO_L26N_4	AN20	I/O
4	IO_L26P_4/VREF_4	IO_L26P_4/VREF_4	AP20	VREF
4	IO_L27N_4/DIN/D0	IO_L27N_4/DIN/D0	AH19	DUAL
4	IO_L27P_4/D1	IO_L27P_4/D1	AJ19	DUAL
4	IO_L28N_4	IO_L28N_4	AM19	I/O
4	IO_L28P_4	IO_L28P_4	AN19	I/O
4	IO_L29N_4	IO_L29N_4	AF18	I/O
4	IO_L29P_4	IO_L29P_4	AG18	I/O
4	IO_L30N_4/D2	IO_L30N_4/D2	AH18	DUAL
4	IO_L30P_4/D3	IO_L30P_4/D3	AJ18	DUAL
4	IO_L31N_4/INIT_B	IO_L31N_4/INIT_B	AL18	DUAL
4	IO_L31P_4/DOUT/BUSY	IO_L31P_4/DOUT/BUSY	AM18	DUAL
4	IO_L32N_4/GCLK1	IO_L32N_4/GCLK1	AN18	GCLK
4	IO_L32P_4/GCLK0	IO_L32P_4/GCLK0	AP18	GCLK
4	IO_L33N_4	IO_L33N_4	AL29	I/O
4	IO_L33P_4	IO_L33P_4	AM29	I/O
4	IO_L34N_4	IO_L34N_4	AN29	I/O
4	IO_L34P_4	IO_L34P_4	AP29	I/O
4	IO_L35N_4	IO_L35N_4	AJ28	I/O
4	IO_L35P_4	IO_L35P_4	AK28	I/O
4	N.C. (◆)	IO_L36N_4	AL28	I/O
4	N.C. (◆)	IO_L36P_4	AM28	I/O
4	N.C. (◆)	IO_L37N_4	AN28	I/O
4	N.C. (◆)	IO_L37P_4	AP28	I/O
4	IO_L38N_4	IO_L38N_4	AK27	I/O
4	IO_L38P_4	IO_L38P_4	AL27	I/O
4	N.C. (◆)	IO_L39N_4	AH24	I/O
4	N.C. (◆)	IO_L39P_4	AJ24	I/O
4	N.C. (◆)	IO_L40N_4	AN24	I/O
4	N.C. (◆)	IO_L40P_4	AP24	I/O

Table 110: **FG1156 Package Pinout *(Cont'd)***

Bank	XC3S4000 Pin Name	XC3S5000 Pin Name	FG1156 Pin Number	Type
4	VCCO_4	VCCO_4	AC19	VCCO
4	VCCO_4	VCCO_4	AC20	VCCO
4	VCCO_4	VCCO_4	AC21	VCCO
4	VCCO_4	VCCO_4	AC22	VCCO
4	VCCO_4	VCCO_4	AG20	VCCO
4	VCCO_4	VCCO_4	AG24	VCCO
4	VCCO_4	VCCO_4	AH27	VCCO
4	VCCO_4	VCCO_4	AJ22	VCCO
4	VCCO_4	VCCO_4	AL19	VCCO
4	VCCO_4	VCCO_4	AL24	VCCO
4	VCCO_4	VCCO_4	AM27	VCCO
4	VCCO_4	VCCO_4	AM31	VCCO
4	VCCO_4	VCCO_4	AN22	VCCO
5	IO	IO	AD11	I/O
5	N.C. (◆)	IO	AD12	I/O
5	IO	IO	AD14	I/O
5	IO	IO	AD15	I/O
5	IO	IO	AD16	I/O
5	IO	IO	AD17	I/O
5	IO	IO	AE14	I/O
5	IO	IO	AE16	I/O
5	N.C. (◆)	IO	AF9	I/O
5	IO	IO	AG9	I/O
5	IO	IO	AG12	I/O
5	IO	IO	AJ6	I/O
5	IO	IO	AJ17	I/O
5	IO	IO	AK10	I/O
5	IO	IO	AK14	I/O
5	IO	IO	AM12	I/O
5	IO	IO	AN9	I/O
5	IO/VREF_5	IO/VREF_5	AJ8	VREF
5	IO/VREF_5	IO/VREF_5	AL5	VREF
5	IO/VREF_5	IO/VREF_5	AP17	VREF
5	IO_L01N_5/RDWR_B	IO_L01N_5/RDWR_B	AP3	DUAL
5	IO_L01P_5/CS_B	IO_L01P_5/CS_B	AN3	DUAL
5	IO_L02N_5	IO_L02N_5	AP4	I/O
5	IO_L02P_5	IO_L02P_5	AN4	I/O
5	IO_L03N_5	IO_L03N_5	AN5	I/O
5	IO_L03P_5	IO_L03P_5	AM5	I/O
5	IO_L04N_5	IO_L04N_5	AM6	I/O

Table 110: **FG1156 Package Pinout *(Cont'd)***

Bank	XC3S4000 Pin Name	XC3S5000 Pin Name	FG1156 Pin Number	Type
5	IO_L04P_5	IO_L04P_5	AL6	I/O
5	IO_L05N_5	IO_L05N_5	AP6	I/O
5	IO_L05P_5	IO_L05P_5	AN6	I/O
5	IO_L06N_5	IO_L06N_5	AK7	I/O
5	IO_L06P_5	IO_L06P_5	AJ7	I/O
5	IO_L07N_5	IO_L07N_5	AG10	I/O
5	IO_L07P_5	IO_L07P_5	AF10	I/O
5	IO_L08N_5	IO_L08N_5	AJ10	I/O
5	IO_L08P_5	IO_L08P_5	AH10	I/O
5	IO_L09N_5	IO_L09N_5	AM10	I/O
5	IO_L09P_5	IO_L09P_5	AL10	I/O
5	IO_L10N_5/VRP_5	IO_L10N_5/VRP_5	AP10	DCI
5	IO_L10P_5/VRN_5	IO_L10P_5/VRN_5	AN10	DCI
5	IO_L11N_5/VREF_5	IO_L11N_5/VREF_5	AP11	VREF
5	IO_L11P_5	IO_L11P_5	AN11	I/O
5	IO_L12N_5	IO_L12N_5	AF12	I/O
5	IO_L12P_5	IO_L12P_5	AE12	I/O
5	IO_L13N_5	IO_L13N_5	AJ12	I/O
5	IO_L13P_5	IO_L13P_5	AH12	I/O
5	IO_L14N_5	IO_L14N_5	AL12	I/O
5	IO_L14P_5	IO_L14P_5	AK12	I/O
5	IO_L15N_5	IO_L15N_5	AP12	I/O
5	IO_L15P_5	IO_L15P_5	AN12	I/O
5	IO_L16N_5	IO_L16N_5	AE13	I/O
5	IO_L16P_5	IO_L16P_5	AD13	I/O
5	IO_L17N_5	IO_L17N_5	AH13	I/O
5	IO_L17P_5	IO_L17P_5	AG13	I/O
5	IO_L18N_5	IO_L18N_5	AM13	I/O
5	IO_L18P_5	IO_L18P_5	AL13	I/O
5	IO_L19N_5	IO_L19N_5	AG14	I/O
5	IO_L19P_5/VREF_5	IO_L19P_5/VREF_5	AF14	VREF
5	IO_L20N_5	IO_L20N_5	AJ14	I/O
5	IO_L20P_5	IO_L20P_5	AH14	I/O
5	IO_L21N_5	IO_L21N_5	AM14	I/O
5	IO_L21P_5	IO_L21P_5	AL14	I/O
5	IO_L22N_5	IO_L22N_5	AP14	I/O
5	IO_L22P_5	IO_L22P_5	AN14	I/O
5	IO_L23N_5	IO_L23N_5	AF15	I/O
5	IO_L23P_5	IO_L23P_5	AE15	I/O
5	IO_L24N_5	IO_L24N_5	AJ15	I/O

Table 110: **FG1156 Package Pinout *(Cont'd)***

Bank	XC3S4000 Pin Name	XC3S5000 Pin Name	FG1156 Pin Number	Type
5	IO_L24P_5	IO_L24P_5	AH15	I/O
5	IO_L25N_5	IO_L25N_5	AM15	I/O
5	IO_L25P_5	IO_L25P_5	AL15	I/O
5	IO_L26N_5	IO_L26N_5	AP15	I/O
5	IO_L26P_5	IO_L26P_5	AN15	I/O
5	IO_L27N_5/VREF_5	IO_L27N_5/VREF_5	AJ16	VREF
5	IO_L27P_5	IO_L27P_5	AH16	I/O
5	IO_L28N_5/D6	IO_L28N_5/D6	AN16	DUAL
5	IO_L28P_5/D7	IO_L28P_5/D7	AM16	DUAL
5	IO_L29N_5	IO_L29N_5	AF17	I/O
5	IO_L29P_5/VREF_5	IO_L29P_5/VREF_5	AE17	VREF
5	IO_L30N_5	IO_L30N_5	AH17	I/O
5	IO_L30P_5	IO_L30P_5	AG17	I/O
5	IO_L31N_5/D4	IO_L31N_5/D4	AL17	DUAL
5	IO_L31P_5/D5	IO_L31P_5/D5	AK17	DUAL
5	IO_L32N_5/GCLK3	IO_L32N_5/GCLK3	AN17	GCLK
5	IO_L32P_5/GCLK2	IO_L32P_5/GCLK2	AM17	GCLK
5	N.C. (◆)	IO_L33N_5	AM7	I/O
5	N.C. (◆)	IO_L33P_5	AL7	I/O
5	N.C. (◆)	IO_L34N_5	AP7	I/O
5	N.C. (◆)	IO_L34P_5	AN7	I/O
5	IO_L35N_5	IO_L35N_5	AL8	I/O
5	IO_L35P_5	IO_L35P_5	AK8	I/O
5	IO_L36N_5	IO_L36N_5	AP8	I/O
5	IO_L36P_5	IO_L36P_5	AN8	I/O
5	IO_L37N_5	IO_L37N_5	AJ9	I/O
5	IO_L37P_5	IO_L37P_5	AH9	I/O
5	IO_L38N_5	IO_L38N_5	AM9	I/O
5	IO_L38P_5	IO_L38P_5	AL9	I/O
5	N.C. (◆)	IO_L39N_5	AF11	I/O
5	N.C. (◆)	IO_L39P_5	AE11	I/O
5	N.C. (◆)	IO_L40N_5	AJ11	I/O
5	N.C. (◆)	IO_L40P_5	AH11	I/O
5	VCCO_5	VCCO_5	AC13	VCCO
5	VCCO_5	VCCO_5	AC14	VCCO
5	VCCO_5	VCCO_5	AC15	VCCO
5	VCCO_5	VCCO_5	AC16	VCCO
5	VCCO_5	VCCO_5	AG11	VCCO
5	VCCO_5	VCCO_5	AG15	VCCO
5	VCCO_5	VCCO_5	AH8	VCCO

Table 110: **FG1156 Package Pinout *(Cont'd)***

Bank	XC3S4000 Pin Name	XC3S5000 Pin Name	FG1156 Pin Number	Type
5	VCCO_5	VCCO_5	AJ13	VCCO
5	VCCO_5	VCCO_5	AL11	VCCO
5	VCCO_5	VCCO_5	AL16	VCCO
5	VCCO_5	VCCO_5	AM4	VCCO
5	VCCO_5	VCCO_5	AM8	VCCO
5	VCCO_5	VCCO_5	AN13	VCCO
6	IO	IO	AH1	I/O
6	IO	IO	AH2	I/O
6	IO	IO	V9	I/O
6	IO	IO	V10	I/O
6	IO_L01N_6/VRP_6	IO_L01N_6/VRP_6	AM2	DCI
6	IO_L01P_6/VRN_6	IO_L01P_6/VRN_6	AM1	DCI
6	IO_L02N_6	IO_L02N_6	AL2	I/O
6	IO_L02P_6	IO_L02P_6	AL1	I/O
6	IO_L03N_6/VREF_6	IO_L03N_6/VREF_6	AK3	VREF
6	IO_L03P_6	IO_L03P_6	AK2	I/O
6	IO_L04N_6	IO_L04N_6	AJ4	I/O
6	IO_L04P_6	IO_L04P_6	AJ3	I/O
6	IO_L05N_6	IO_L05N_6	AJ2	I/O
6	IO_L05P_6	IO_L05P_6	AJ1	I/O
6	IO_L06N_6	IO_L06N_6	AH6	I/O
6	IO_L06P_6	IO_L06P_6	AH5	I/O
6	IO_L07N_6	IO_L07N_6	AG6	I/O
6	IO_L07P_6	IO_L07P_6	AG5	I/O
6	IO_L08N_6	IO_L08N_6	AG2	I/O
6	IO_L08P_6	IO_L08P_6	AG1	I/O
6	IO_L09N_6/VREF_6	IO_L09N_6/VREF_6	AF7	VREF
6	IO_L09P_6	IO_L09P_6	AF6	I/O
6	IO_L10N_6	IO_L10N_6	AG4	I/O
6	IO_L10P_6	IO_L10P_6	AF4	I/O
6	IO_L11N_6	IO_L11N_6	AF3	I/O
6	IO_L11P_6	IO_L11P_6	AF2	I/O
6	IO_L12N_6	IO_L12N_6	AF8	I/O
6	IO_L12P_6	IO_L12P_6	AE9	I/O
6	IO_L13N_6	IO_L13N_6	AE8	I/O
6	IO_L13P_6/VREF_6	IO_L13P_6/VREF_6	AE7	VREF
6	IO_L14N_6	IO_L14N_6	AE6	I/O
6	IO_L14P_6	IO_L14P_6	AE5	I/O
6	IO_L15N_6	IO_L15N_6	AE4	I/O
6	IO_L15P_6	IO_L15P_6	AE3	I/O

Table 110: **FG1156 Package Pinout *(Cont'd)***

Bank	XC3S4000 Pin Name	XC3S5000 Pin Name	FG1156 Pin Number	Type
6	IO_L16N_6	IO_L16N_6	AE2	I/O
6	IO_L16P_6	IO_L16P_6	AE1	I/O
6	IO_L17N_6	IO_L17N_6	AD10	I/O
6	IO_L17P_6/VREF_6	IO_L17P_6/VREF_6	AD9	VREF
6	IO_L19N_6	IO_L19N_6	AD2	I/O
6	IO_L19P_6	IO_L19P_6	AD1	I/O
6	IO_L20N_6	IO_L20N_6	AC11	I/O
6	IO_L20P_6	IO_L20P_6	AC10	I/O
6	IO_L21N_6	IO_L21N_6	AC8	I/O
6	IO_L21P_6	IO_L21P_6	AC7	I/O
6	IO_L22N_6	IO_L22N_6	AC6	I/O
6	IO_L22P_6	IO_L22P_6	AC5	I/O
6	IO_L23N_6	IO_L23N_6	AC2	I/O
6	IO_L23P_6	IO_L23P_6	AC1	I/O
6	IO_L24N_6/VREF_6	IO_L24N_6/VREF_6	AC9	VREF
6	IO_L24P_6	IO_L24P_6	AB10	I/O
6	IO_L25N_6	IO_L25N_6	AB8	I/O
6	IO_L25P_6	IO_L25P_6	AB7	I/O
6	IO_L26N_6	IO_L26N_6	AB4	I/O
6	IO_L26P_6	IO_L26P_6	AB3	I/O
6	IO_L27N_6	IO_L27N_6	AB11	I/O
6	IO_L27P_6	IO_L27P_6	AA11	I/O
6	IO_L28N_6	IO_L28N_6	AA8	I/O
6	IO_L28P_6	IO_L28P_6	AA7	I/O
6	IO_L29N_6	IO_L29N_6	AA6	I/O
6	IO_L29P_6	IO_L29P_6	AA5	I/O
6	IO_L30N_6	IO_L30N_6	AA4	I/O
6	IO_L30P_6	IO_L30P_6	AA3	I/O
6	IO_L31N_6	IO_L31N_6	AA2	I/O
6	IO_L31P_6	IO_L31P_6	AA1	I/O
6	IO_L32N_6	IO_L32N_6	Y11	I/O
6	IO_L32P_6	IO_L32P_6	Y10	I/O
6	IO_L33N_6	IO_L33N_6	Y4	I/O
6	IO_L33P_6	IO_L33P_6	Y3	I/O
6	IO_L34N_6/VREF_6	IO_L34N_6/VREF_6	Y2	VREF
6	IO_L34P_6	IO_L34P_6	Y1	I/O
6	IO_L35N_6	IO_L35N_6	Y9	I/O
6	IO_L35P_6	IO_L35P_6	W10	I/O
6	IO_L36N_6	IO_L36N_6	W7	I/O
6	IO_L36P_6	IO_L36P_6	W6	I/O

Table 110: **FG1156 Package Pinout *(Cont'd)***

Bank	XC3S4000 Pin Name	XC3S5000 Pin Name	FG1156 Pin Number	Type
6	IO_L37N_6	IO_L37N_6	W3	I/O
6	IO_L37P_6	IO_L37P_6	W2	I/O
6	IO_L38N_6	IO_L38N_6	V6	I/O
6	IO_L38P_6	IO_L38P_6	V5	I/O
6	IO_L39N_6	IO_L39N_6	V4	I/O
6	IO_L39P_6	IO_L39P_6	V3	I/O
6	IO_L40N_6	IO_L40N_6	V2	I/O
6	IO_L40P_6/VREF_6	IO_L40P_6/VREF_6	V1	VREF
6	N.C. (◆)	IO_L41N_6	AH4	I/O
6	N.C. (◆)	IO_L41P_6	AH3	I/O
6	N.C. (◆)	IO_L44N_6	AD7	I/O
6	N.C. (◆)	IO_L44P_6	AD6	I/O
6	IO_L45N_6	IO_L45N_6	AC4	I/O
6	IO_L45P_6	IO_L45P_6	AC3	I/O
6	N.C. (◆)	IO_L46N_6	AA10	I/O
6	N.C. (◆)	IO_L46P_6	AA9	I/O
6	IO_L48N_6	IO_L48N_6	Y7	I/O
6	IO_L48P_6	IO_L48P_6	Y6	I/O
6	N.C. (◆)	IO_L49N_6	W11	I/O
6	N.C. (◆)	IO_L49P_6	V11	I/O
6	IO_L52N_6	IO_L52N_6	V8	I/O
6	IO_L52P_6	IO_L52P_6	V7	I/O
6	VCCO_6	VCCO_6	AA12	VCCO
6	VCCO_6	VCCO_6	AB12	VCCO
6	VCCO_6	VCCO_6	AB2	VCCO
6	VCCO_6	VCCO_6	AB6	VCCO
6	VCCO_6	VCCO_6	AD4	VCCO
6	VCCO_6	VCCO_6	AD8	VCCO
6	VCCO_6	VCCO_6	AG3	VCCO
6	VCCO_6	VCCO_6	AG7	VCCO
6	VCCO_6	VCCO_6	AL3	VCCO
6	VCCO_6	VCCO_6	W12	VCCO
6	VCCO_6	VCCO_6	W4	VCCO
6	VCCO_6	VCCO_6	Y12	VCCO
6	VCCO_6	VCCO_6	Y8	VCCO
7	IO	IO	G1	I/O
7	IO	IO	G2	I/O
7	IO	IO	U10	I/O
7	IO	IO	U9	I/O
7	IO_L01N_7/VRP_7	IO_L01N_7/VRP_7	C1	DCI

Table 110: **FG1156 Package Pinout *(Cont'd)***

Bank	XC3S4000 Pin Name	XC3S5000 Pin Name	FG1156 Pin Number	Type
7	IO_L01P_7/VRN_7	IO_L01P_7/VRN_7	C2	DCI
7	IO_L02N_7	IO_L02N_7	D1	I/O
7	IO_L02P_7	IO_L02P_7	D2	I/O
7	IO_L03N_7/VREF_7	IO_L03N_7/VREF_7	E2	VREF
7	IO_L03P_7	IO_L03P_7	E3	I/O
7	IO_L04N_7	IO_L04N_7	F3	I/O
7	IO_L04P_7	IO_L04P_7	F4	I/O
7	IO_L05N_7	IO_L05N_7	F1	I/O
7	IO_L05P_7	IO_L05P_7	F2	I/O
7	IO_L06N_7	IO_L06N_7	G5	I/O
7	IO_L06P_7	IO_L06P_7	G6	I/O
7	IO_L07N_7	IO_L07N_7	H5	I/O
7	IO_L07P_7	IO_L07P_7	H6	I/O
7	IO_L08N_7	IO_L08N_7	H1	I/O
7	IO_L08P_7	IO_L08P_7	H2	I/O
7	IO_L09N_7	IO_L09N_7	J6	I/O
7	IO_L09P_7	IO_L09P_7	J7	I/O
7	IO_L10N_7	IO_L10N_7	J4	I/O
7	IO_L10P_7/VREF_7	IO_L10P_7/VREF_7	H4	VREF
7	IO_L11N_7	IO_L11N_7	J2	I/O
7	IO_L11P_7	IO_L11P_7	J3	I/O
7	IO_L12N_7	IO_L12N_7	K9	I/O
7	IO_L12P_7	IO_L12P_7	J8	I/O
7	IO_L13N_7	IO_L13N_7	K7	I/O
7	IO_L13P_7	IO_L13P_7	K8	I/O
7	IO_L14N_7	IO_L14N_7	K5	I/O
7	IO_L14P_7	IO_L14P_7	K6	I/O
7	IO_L15N_7	IO_L15N_7	K3	I/O
7	IO_L15P_7	IO_L15P_7	K4	I/O
7	IO_L16N_7	IO_L16N_7	K1	I/O
7	IO_L16P_7/VREF_7	IO_L16P_7/VREF_7	K2	VREF
7	IO_L17N_7	IO_L17N_7	L9	I/O
7	IO_L17P_7	IO_L17P_7	L10	I/O
7	IO_L19N_7/VREF_7	IO_L19N_7/VREF_7	L1	VREF
7	IO_L19P_7	IO_L19P_7	L2	I/O
7	IO_L20N_7	IO_L20N_7	M10	I/O
7	IO_L20P_7	IO_L20P_7	M11	I/O
7	IO_L21N_7	IO_L21N_7	M7	I/O
7	IO_L21P_7	IO_L21P_7	M8	I/O
7	IO_L22N_7	IO_L22N_7	M5	I/O

Table 110: **FG1156 Package Pinout *(Cont'd)***

Bank	XC3S4000 Pin Name	XC3S5000 Pin Name	FG1156 Pin Number	Type
7	IO_L22P_7	IO_L22P_7	M6	I/O
7	IO_L23N_7	IO_L23N_7	M3	I/O
7	IO_L23P_7	IO_L23P_7	M4	I/O
7	IO_L24N_7	IO_L24N_7	N10	I/O
7	IO_L24P_7	IO_L24P_7	M9	I/O
7	IO_L25N_7	IO_L25N_7	N3	I/O
7	IO_L25P_7	IO_L25P_7	N4	I/O
7	IO_L26N_7	IO_L26N_7	P11	I/O
7	IO_L26P_7	IO_L26P_7	N11	I/O
7	IO_L27N_7	IO_L27N_7	P7	I/O
7	IO_L27P_7/VREF_7	IO_L27P_7/VREF_7	P8	VREF
7	IO_L28N_7	IO_L28N_7	P5	I/O
7	IO_L28P_7	IO_L28P_7	P6	I/O
7	IO_L29N_7	IO_L29N_7	P3	I/O
7	IO_L29P_7	IO_L29P_7	P4	I/O
7	IO_L30N_7	IO_L30N_7	R6	I/O
7	IO_L30P_7	IO_L30P_7	R7	I/O
7	IO_L31N_7	IO_L31N_7	R3	I/O
7	IO_L31P_7	IO_L31P_7	R4	I/O
7	IO_L32N_7	IO_L32N_7	R1	I/O
7	IO_L32P_7	IO_L32P_7	R2	I/O
7	IO_L33N_7	IO_L33N_7	T10	I/O
7	IO_L33P_7	IO_L33P_7	R9	I/O
7	IO_L34N_7	IO_L34N_7	T6	I/O
7	IO_L34P_7	IO_L34P_7	T7	I/O
7	IO_L35N_7	IO_L35N_7	T2	I/O
7	IO_L35P_7	IO_L35P_7	T3	I/O
7	IO_L37N_7	IO_L37N_7	U7	I/O
7	IO_L37P_7/VREF_7	IO_L37P_7/VREF_7	U8	VREF
7	IO_L38N_7	IO_L38N_7	U5	I/O
7	IO_L38P_7	IO_L38P_7	U6	I/O
7	IO_L39N_7	IO_L39N_7	U3	I/O
7	IO_L39P_7	IO_L39P_7	U4	I/O
7	IO_L40N_7/VREF_7	IO_L40N_7/VREF_7	U1	VREF
7	IO_L40P_7	IO_L40P_7	U2	I/O
7	N.C. (◆)	IO_L41N_7	G3	I/O
7	N.C. (◆)	IO_L41P_7	G4	I/O
7	N.C. (◆)	IO_L44N_7	L6	I/O
7	N.C. (◆)	IO_L44P_7	L7	I/O
7	IO_L45N_7	IO_L45N_7	M1	I/O

Table 110: **FG1156 Package Pinout *(Cont'd)***

Bank	XC3S4000 Pin Name	XC3S5000 Pin Name	FG1156 Pin Number	Type
7	IO_L45P_7	IO_L45P_7	M2	I/O
7	IO_L46N_7	IO_L46N_7	N7	I/O
7	IO_L46P_7	IO_L46P_7	N8	I/O
7	N.C. (◆)	IO_L47N_7	P9	I/O
7	N.C. (◆)	IO_L47P_7	P10	I/O
7	IO_L49N_7	IO_L49N_7	P1	I/O
7	IO_L49P_7	IO_L49P_7	P2	I/O
7	IO_L50N_7	IO_L50N_7	R10	I/O
7	IO_L50P_7	IO_L50P_7	R11	I/O
7	N.C. (◆)	IO_L51N_7	U11	I/O
7	N.C. (◆)	IO_L51P_7	T11	I/O
7	VCCO_7	VCCO_7	D3	VCCO
7	VCCO_7	VCCO_7	H3	VCCO
7	VCCO_7	VCCO_7	H7	VCCO
7	VCCO_7	VCCO_7	L4	VCCO
7	VCCO_7	VCCO_7	L8	VCCO
7	VCCO_7	VCCO_7	N12	VCCO
7	VCCO_7	VCCO_7	N2	VCCO
7	VCCO_7	VCCO_7	N6	VCCO
7	VCCO_7	VCCO_7	P12	VCCO
7	VCCO_7	VCCO_7	R12	VCCO
7	VCCO_7	VCCO_7	R8	VCCO
7	VCCO_7	VCCO_7	T12	VCCO
7	VCCO_7	VCCO_7	T4	VCCO
N/A	GND	GND	A1	GND
N/A	GND	GND	A13	GND
N/A	GND	GND	A16	GND
N/A	GND	GND	A19	GND
N/A	GND	GND	A2	GND
N/A	GND	GND	A22	GND
N/A	GND	GND	A26	GND
N/A	GND	GND	A30	GND
N/A	GND	GND	A33	GND
N/A	GND	GND	A34	GND
N/A	GND	GND	A5	GND
N/A	GND	GND	A9	GND
N/A	GND	GND	AA14	GND
N/A	GND	GND	AA15	GND
N/A	GND	GND	AA16	GND
N/A	GND	GND	AA17	GND

Table 110: **FG1156 Package Pinout *(Cont'd)***

Bank	XC3S4000 Pin Name	XC3S5000 Pin Name	FG1156 Pin Number	Type
N/A	GND	GND	AA18	GND
N/A	GND	GND	AA19	GND
N/A	GND	GND	AA20	GND
N/A	GND	GND	AA21	GND
N/A	GND	GND	AB1	GND
N/A	GND	GND	AB17	GND
N/A	GND	GND	AB18	GND
N/A	GND	GND	AB26	GND
N/A	GND	GND	AB30	GND
N/A	GND	GND	AB34	GND
N/A	GND	GND	AB5	GND
N/A	GND	GND	AB9	GND
N/A	GND	GND	AD3	GND
N/A	GND	GND	AD32	GND
N/A	GND	GND	AE10	GND
N/A	GND	GND	AE25	GND
N/A	GND	GND	AF1	GND
N/A	GND	GND	AF13	GND
N/A	GND	GND	AF16	GND
N/A	GND	GND	AF19	GND
N/A	GND	GND	AF22	GND
N/A	GND	GND	AF30	GND
N/A	GND	GND	AF34	GND
N/A	GND	GND	AF5	GND
N/A	GND	GND	AH28	GND
N/A	GND	GND	AH7	GND
N/A	GND	GND	AK1	GND
N/A	GND	GND	AK13	GND
N/A	GND	GND	AK16	GND
N/A	GND	GND	AK19	GND
N/A	GND	GND	AK22	GND
N/A	GND	GND	AK26	GND
N/A	GND	GND	AK30	GND
N/A	GND	GND	AK34	GND
N/A	GND	GND	AK5	GND
N/A	GND	GND	AK9	GND
N/A	GND	GND	AM11	GND
N/A	GND	GND	AM24	GND
N/A	GND	GND	AM3	GND
N/A	GND	GND	AM32	GND

Table 110: **FG1156 Package Pinout *(Cont'd)***

Bank	XC3S4000 Pin Name	XC3S5000 Pin Name	FG1156 Pin Number	Type
N/A	GND	GND	AN1	GND
N/A	GND	GND	AN2	GND
N/A	GND	GND	AN33	GND
N/A	GND	GND	AN34	GND
N/A	GND	GND	AP1	GND
N/A	GND	GND	AP13	GND
N/A	GND	GND	AP16	GND
N/A	GND	GND	AP19	GND
N/A	GND	GND	AP2	GND
N/A	GND	GND	AP22	GND
N/A	GND	GND	AP26	GND
N/A	GND	GND	AP30	GND
N/A	GND	GND	AP33	GND
N/A	GND	GND	AP34	GND
N/A	GND	GND	AP5	GND
N/A	GND	GND	AP9	GND
N/A	GND	GND	B1	GND
N/A	GND	GND	B2	GND
N/A	GND	GND	B33	GND
N/A	GND	GND	B34	GND
N/A	GND	GND	C11	GND
N/A	GND	GND	C24	GND
N/A	GND	GND	C3	GND
N/A	GND	GND	C32	GND
N/A	GND	GND	E1	GND
N/A	GND	GND	E13	GND
N/A	GND	GND	E16	GND
N/A	GND	GND	E19	GND
N/A	GND	GND	E22	GND
N/A	GND	GND	E26	GND
N/A	GND	GND	E30	GND
N/A	GND	GND	E34	GND
N/A	GND	GND	E5	GND
N/A	GND	GND	E9	GND
N/A	GND	GND	G28	GND
N/A	GND	GND	G7	GND
N/A	GND	GND	J1	GND
N/A	GND	GND	J13	GND
N/A	GND	GND	J16	GND
N/A	GND	GND	J19	GND

Table 110: **FG1156 Package Pinout *(Cont'd)***

Bank	XC3S4000 Pin Name	XC3S5000 Pin Name	FG1156 Pin Number	Type
N/A	GND	GND	J22	GND
N/A	GND	GND	J30	GND
N/A	GND	GND	J34	GND
N/A	GND	GND	J5	GND
N/A	GND	GND	K10	GND
N/A	GND	GND	K25	GND
N/A	GND	GND	L3	GND
N/A	GND	GND	L32	GND
N/A	GND	GND	N1	GND
N/A	GND	GND	N17	GND
N/A	GND	GND	N18	GND
N/A	GND	GND	N26	GND
N/A	GND	GND	N30	GND
N/A	GND	GND	N34	GND
N/A	GND	GND	N5	GND
N/A	GND	GND	N9	GND
N/A	GND	GND	P14	GND
N/A	GND	GND	P15	GND
N/A	GND	GND	P16	GND
N/A	GND	GND	P17	GND
N/A	GND	GND	P18	GND
N/A	GND	GND	P19	GND
N/A	GND	GND	P20	GND
N/A	GND	GND	P21	GND
N/A	GND	GND	R14	GND
N/A	GND	GND	R15	GND
N/A	GND	GND	R16	GND
N/A	GND	GND	R17	GND
N/A	GND	GND	R18	GND
N/A	GND	GND	R19	GND
N/A	GND	GND	R20	GND
N/A	GND	GND	R21	GND
N/A	GND	GND	T1	GND
N/A	GND	GND	T14	GND
N/A	GND	GND	T15	GND
N/A	GND	GND	T16	GND
N/A	GND	GND	T17	GND
N/A	GND	GND	T18	GND
N/A	GND	GND	T19	GND
N/A	GND	GND	T20	GND

Table 110: **FG1156 Package Pinout *(Cont'd)***

Bank	XC3S4000 Pin Name	XC3S5000 Pin Name	FG1156 Pin Number	Type
N/A	GND	GND	T21	GND
N/A	GND	GND	T26	GND
N/A	GND	GND	T30	GND
N/A	GND	GND	T34	GND
N/A	GND	GND	T5	GND
N/A	GND	GND	T9	GND
N/A	GND	GND	U13	GND
N/A	GND	GND	U14	GND
N/A	GND	GND	U15	GND
N/A	GND	GND	U16	GND
N/A	GND	GND	U17	GND
N/A	GND	GND	U18	GND
N/A	GND	GND	U19	GND
N/A	GND	GND	U20	GND
N/A	GND	GND	U21	GND
N/A	GND	GND	U22	GND
N/A	GND	GND	V13	GND
N/A	GND	GND	V14	GND
N/A	GND	GND	V15	GND
N/A	GND	GND	V16	GND
N/A	GND	GND	V17	GND
N/A	GND	GND	V18	GND
N/A	GND	GND	V19	GND
N/A	GND	GND	V20	GND
N/A	GND	GND	V21	GND
N/A	GND	GND	V22	GND
N/A	GND	GND	W1	GND
N/A	GND	GND	W14	GND
N/A	GND	GND	W15	GND
N/A	GND	GND	W16	GND
N/A	GND	GND	W17	GND
N/A	GND	GND	W18	GND
N/A	GND	GND	W19	GND
N/A	GND	GND	W20	GND
N/A	GND	GND	W21	GND
N/A	GND	GND	W26	GND
N/A	GND	GND	W30	GND
N/A	GND	GND	W34	GND
N/A	GND	GND	W5	GND
N/A	GND	GND	W9	GND

Table 110: **FG1156 Package Pinout *(Cont'd)***

Bank	XC3S4000 Pin Name	XC3S5000 Pin Name	FG1156 Pin Number	Type
N/A	GND	GND	Y14	GND
N/A	GND	GND	Y15	GND
N/A	GND	GND	Y16	GND
N/A	GND	GND	Y17	GND
N/A	GND	GND	Y18	GND
N/A	GND	GND	Y19	GND
N/A	GND	GND	Y20	GND
N/A	GND	GND	Y21	GND
N/A	N.C. (◆)	N.C. (■)	AK31	N.C.
N/A	VCCAUX	VCCAUX	AD30	VCCAUX
N/A	VCCAUX	VCCAUX	AD5	VCCAUX
N/A	VCCAUX	VCCAUX	AG16	VCCAUX
N/A	VCCAUX	VCCAUX	AG19	VCCAUX
N/A	VCCAUX	VCCAUX	AJ30	VCCAUX
N/A	VCCAUX	VCCAUX	AJ5	VCCAUX
N/A	VCCAUX	VCCAUX	AK11	VCCAUX
N/A	VCCAUX	VCCAUX	AK15	VCCAUX
N/A	VCCAUX	VCCAUX	AK20	VCCAUX
N/A	VCCAUX	VCCAUX	AK24	VCCAUX
N/A	VCCAUX	VCCAUX	AK29	VCCAUX
N/A	VCCAUX	VCCAUX	AK6	VCCAUX
N/A	VCCAUX	VCCAUX	E11	VCCAUX
N/A	VCCAUX	VCCAUX	E15	VCCAUX
N/A	VCCAUX	VCCAUX	E20	VCCAUX
N/A	VCCAUX	VCCAUX	E24	VCCAUX
N/A	VCCAUX	VCCAUX	E29	VCCAUX
N/A	VCCAUX	VCCAUX	E6	VCCAUX
N/A	VCCAUX	VCCAUX	F30	VCCAUX
N/A	VCCAUX	VCCAUX	F5	VCCAUX
N/A	VCCAUX	VCCAUX	H16	VCCAUX
N/A	VCCAUX	VCCAUX	H19	VCCAUX
N/A	VCCAUX	VCCAUX	L30	VCCAUX
N/A	VCCAUX	VCCAUX	L5	VCCAUX
N/A	VCCAUX	VCCAUX	R30	VCCAUX
N/A	VCCAUX	VCCAUX	R5	VCCAUX
N/A	VCCAUX	VCCAUX	T27	VCCAUX
N/A	VCCAUX	VCCAUX	T8	VCCAUX
N/A	VCCAUX	VCCAUX	W27	VCCAUX
N/A	VCCAUX	VCCAUX	W8	VCCAUX
N/A	VCCAUX	VCCAUX	Y30	VCCAUX

Table 110: **FG1156 Package Pinout *(Cont'd)***

Bank	XC3S4000 Pin Name	XC3S5000 Pin Name	FG1156 Pin Number	Type
N/A	VCCAUX	VCCAUX	Y5	VCCAUX
N/A	VCCINT	VCCINT	AA13	VCCINT
N/A	VCCINT	VCCINT	AA22	VCCINT
N/A	VCCINT	VCCINT	AB13	VCCINT
N/A	VCCINT	VCCINT	AB14	VCCINT
N/A	VCCINT	VCCINT	AB15	VCCINT
N/A	VCCINT	VCCINT	AB16	VCCINT
N/A	VCCINT	VCCINT	AB19	VCCINT
N/A	VCCINT	VCCINT	AB20	VCCINT
N/A	VCCINT	VCCINT	AB21	VCCINT
N/A	VCCINT	VCCINT	AB22	VCCINT
N/A	VCCINT	VCCINT	AC12	VCCINT
N/A	VCCINT	VCCINT	AC17	VCCINT
N/A	VCCINT	VCCINT	AC18	VCCINT
N/A	VCCINT	VCCINT	AC23	VCCINT
N/A	VCCINT	VCCINT	M12	VCCINT
N/A	VCCINT	VCCINT	M17	VCCINT
N/A	VCCINT	VCCINT	M18	VCCINT
N/A	VCCINT	VCCINT	M23	VCCINT
N/A	VCCINT	VCCINT	N13	VCCINT
N/A	VCCINT	VCCINT	N14	VCCINT
N/A	VCCINT	VCCINT	N15	VCCINT
N/A	VCCINT	VCCINT	N16	VCCINT
N/A	VCCINT	VCCINT	N19	VCCINT
N/A	VCCINT	VCCINT	N20	VCCINT
N/A	VCCINT	VCCINT	N21	VCCINT
N/A	VCCINT	VCCINT	N22	VCCINT
N/A	VCCINT	VCCINT	P13	VCCINT
N/A	VCCINT	VCCINT	P22	VCCINT
N/A	VCCINT	VCCINT	R13	VCCINT
N/A	VCCINT	VCCINT	R22	VCCINT
N/A	VCCINT	VCCINT	T13	VCCINT
N/A	VCCINT	VCCINT	T22	VCCINT
N/A	VCCINT	VCCINT	U12	VCCINT
N/A	VCCINT	VCCINT	U23	VCCINT
N/A	VCCINT	VCCINT	V12	VCCINT
N/A	VCCINT	VCCINT	V23	VCCINT
N/A	VCCINT	VCCINT	W13	VCCINT
N/A	VCCINT	VCCINT	W22	VCCINT
N/A	VCCINT	VCCINT	Y13	VCCINT

Table 110: **FG1156 Package Pinout *(Cont'd)***

Bank	XC3S4000 Pin Name	XC3S5000 Pin Name	FG1156 Pin Number	Type
N/A	VCCINT	VCCINT	Y22	VCCINT
VCCAUX	CCLK	CCLK	AL31	CONFIG
VCCAUX	DONE	DONE	AD24	CONFIG
VCCAUX	HSWAP_EN	HSWAP_EN	L11	CONFIG
VCCAUX	M0	M0	AL4	CONFIG
VCCAUX	M1	M1	AK4	CONFIG
VCCAUX	M2	M2	AG8	CONFIG
VCCAUX	PROG_B	PROG_B	D4	CONFIG
VCCAUX	TCK	TCK	D31	JTAG
VCCAUX	TDI	TDI	E4	JTAG
VCCAUX	TDO	TDO	E31	JTAG
VCCAUX	TMS	TMS	H27	JTAG

User I/Os by Bank

Note: The FG(G)1156 package is discontinued. See http://www.xilinx.com/support/documentation/spartan-3_customer_notices.htm.

Table 111 indicates how the available user-I/O pins are distributed between the eight I/O banks for the XC3S4000 in the FG1156 package. Similarly, Table 112 shows how the available user-I/O pins are distributed between the eight I/O banks for the XC3S5000 in the FG1156 package.

Table 111: **User I/Os Per Bank for XC3S4000 in FG1156 Package**

Package Edge	I/O Bank	Maximum I/O	All Possible I/O Pins by Type				
			I/O	DUAL	DCI	VREF	GCLK
Top	0	90	79	0	2	7	2
	1	90	79	0	2	7	2
Right	2	88	80	0	2	6	0
	3	88	79	0	2	7	0
Bottom	4	90	73	6	2	7	2
	5	90	73	6	2	7	2
Left	6	88	79	0	2	7	0
	7	88	79	0	2	7	0

Notes:

1. The FG1156 and FGG1156 packages are discontinued. See www.xilinx.com/support/documentation/spartan-3.htm#19600.

Table 112: **User I/Os Per Bank for XC3S5000 in FG1156 Package**

Package Edge	I/O Bank	Maximum I/O	All Possible I/O Pins by Type				
			I/O	DUAL	DCI	VREF	GCLK
Top	0	100	89	0	2	7	2
	1	100	89	0	2	7	2
Right	2	96	87	0	2	7	0
	3	96	87	0	2	7	0
Bottom	4	100	83	6	2	7	2
	5	100	83	6	2	7	2
Left	6	96	87	0	2	7	0
	7	96	87	0	2	7	0

Notes:

1. The FG1156 and FGG1156 packages are discontinued. See www.xilinx.com/support/documentation/spartan-3.htm#19600.

FG1156 Footprint

Top Left Corner of FG1156 Package (Top View)

XC3S4000 (712 max. user I/O)

621	**I/O:** Unrestricted, general-purpose user I/O	55	**VREF:** User I/O or input voltage reference for bank	73	**N.C.:** Unconnected pins for XC3S4000 (◆)

XC3S5000 (784 max. user I/O)

692	**I/O:** Unrestricted, general-purpose user I/O	56	**VREF:** User I/O or input voltage reference for bank	1	**N.C.:** Unconnected pins for XC3S5000 (■)

Bank 0

Bank 7

	1	2	3	4	5	6	7	8	9	10	11	12	13	14	15	16	17
A	GND	GND	I/O L01P_0 VRN_0	I/O L02P_0	GND	I/O L05P_0 VREF_0	I/O L34P_0 ◆	I/O L36P_0	GND	I/O L38P_0	I/O L40P_0 ◆	I/O L15P_0	GND	I/O L22P_0	I/O L26P_0 VREF_0	GND	I/O L32P_0 GCLK6
B	GND	GND	I/O L01N_0 VRP_0	I/O L02N_0	I/O L03P_0	I/O L05N_0	I/O L34N_0 ◆	I/O L36N_0	I/O	I/O L38N_0	I/O L40N_0 ◆	I/O L15N_0	VCCO_0	I/O L22N_0	I/O L26N_0	I/O L28P_0	I/O L32N_0 GCLK7
C	I/O L01N_7 VRP_7	I/O L01P_7 VRN_7	GND	VCCO_0	I/O L03N_0	I/O L04P_0	I/O L33P_0 ◆	VCCO_0	I/O L08P_0	I/O L37P_0	GND	I/O L14P_0	I/O L17P_0	I/O L21P_0	I/O L25P_0	I/O L28N_0	I/O L31P_0 VREF_0
D	I/O L02N_7	I/O L02P_7	VCCO_7	PROG_B	IO VREF_0	I/O L04N_0	I/O L33N_0 ◆	I/O L35P_0	I/O L08N_0	I/O L37N_0	VCCO_0	I/O L14N_0	I/O L17N_0	I/O L21N_0	I/O L25N_0	VCCO_0	I/O L31N_0
E	GND	I/O L03N_7 VREF_7	I/O L03P_7	TDI	GND	VCCAUX	I/O L06P_0	I/O L35N_0	GND	IO VREF_0	VCCAUX	I/O L13P_0	GND	I/O L20P_0	VCCAUX	GND	I/O
F	I/O L05N_7	I/O L05P_7	I/O L04N_7	I/O L04P_7	VCCAUX	I/O	I/O L06N_0	I/O	I/O L07P_0	I/O L10P_0	I/O L39P_0 ◆	I/O L13N_0	VCCO_0	I/O L20N_0	I/O L24P_0	I/O L27P_0	I/O L30P_0
G	I/O	I/O	I/O L41N_7 ◆	I/O L41P_7 ◆	I/O L06N_7	I/O L06P_7	GND	VCCO_0	I/O L07N_0	I/O L10N_0	I/O L39N_0 ◆	I/O	I/O L16P_0	I/O L19P_0	I/O L24N_0	I/O L27N_0	I/O L30N_0
H	I/O L08N_7	I/O L08P_7	VCCO_7	I/O L10P_7 VREF_7	I/O L07N_7	I/O L07P_7	VCCO_7	I/O	I/O	I/O L09P_0	VCCO_0	I/O L12P_0	I/O L16N_0	I/O L19N_0	VCCO_0	VCCAUX	I/O L29P_0
J	GND	I/O L11N_7	I/O L11P_7	I/O L10N_7	GND	I/O L09N_7	I/O L09P_7	I/O L12P_7	I/O ◆	I/O L09N_0	I/O	I/O L12N_0	GND	IO VREF_0	I/O L23P_0	GND	I/O L29N_0
K	I/O L16N_7	I/O L16P_7 VREF_7	I/O L15N_7	I/O L15P_7	I/O L14N_7	I/O L14P_7	I/O L13N_7	I/O L13P_7	I/O L12N_7	GND	I/O ◆	I/O L11P_0	I/O	I/O L18P_0	I/O L23N_0	I/O	I/O
L	I/O L19N_7 VREF_7	I/O L19P_7	GND	VCCO_7	VCCAUX	I/O L44N_7 ◆	I/O L44P_7 ◆	VCCO_7	I/O L17N_7	I/O L17P_7	HSWAP_ EN	I/O L11N_0	I/O	I/O L18N_0	IO VREF_0	I/O	I/O
M	I/O L45N_7	I/O L45P_7	I/O L23N_7	I/O L23P_7	I/O L22N_7	I/O L22P_7	I/O L21N_7	I/O L21P_7	I/O L24P_7	I/O L20N_7	I/O L20P_7	VCCINT	VCCO_0	VCCO_0	VCCO_0	VCCO_0	VCCINT
N	GND	VCCO_7	I/O L25N_7	I/O L25P_7	GND	VCCO_7	I/O L46N_7	I/O L46P_7	GND	I/O L24N_7	I/O L26P_7	VCCO_7	VCCINT	VCCINT	VCCINT	VCCINT	GND
P	I/O L49N_7	I/O L49P_7	I/O L29N_7	I/O L29P_7	I/O L28N_7	I/O L28P_7	I/O L27N_7	I/O L27P_7 VREF_7	I/O L47N_7 ◆	I/O L47P_7 ◆	I/O L26N_7	VCCO_7	VCCINT	GND	GND	GND	GND
R	I/O L32N_7	I/O L32P_7	I/O L31N_7	I/O L31P_7	VCCAUX	I/O L30N_7	I/O L30P_7	VCCO_7	I/O L33P_7	I/O L50N_7	I/O L50P_7	VCCO_7	VCCINT	GND	GND	GND	GND
T	GND	I/O L35N_7	I/O L35P_7	VCCO_7	GND	I/O L34N_7	I/O L34P_7	VCCAUX	GND	I/O L33N_7	I/O L51P_7 ◆	VCCO_7	VCCINT	GND	GND	GND	GND
U	I/O L40N_7 VREF_7	I/O L40P_7	I/O L39N_7	I/O L39P_7	I/O L38N_7	I/O L38P_7	I/O L37N_7	I/O L37P_7 VREF_7	I/O	I/O	I/O L51N_7 ◆	VCCINT	GND	GND	GND	GND	GND

DS099-4_14a_072903

Figure 57: **FG1156 Package Footprint (Top View)**

All Devices

12	**DUAL:** Configuration pin, then possible user I/O	16	**DCI:** User I/O or reference resistor input for bank	8	**GCLK:** User I/O or global clock buffer input
7	**CONFIG:** Dedicated configuration pins	4	**JTAG:** Dedicated JTAG port pins	104	**VCCO:** Output voltage supply for bank
40	**VCCINT:** Internal core voltage supply (+1.2V)	32	**VCCAUX:** Auxiliary voltage supply (+2.5V)	184	**GND:** Ground

Top Right Corner of FG1156 Package (Top View)

Bank 1

18	19	20	21	22	23	24	25	26	27	28	29	30	31	32	33	34	
I/O	GND	I/O L40N_1	I/O L26N_1	GND	I/O L19N_1	I/O L15N_1	I/O L14N_1	GND	I/O L08N_1	I/O L34N_1 ◆	I/O L05N_1	GND	I/O L02N_1	I/O L01N_1 VRP_1	GND	GND	A
I/O L32N_1 GCLK5	I/O L28N_1	I/O L40P_1	I/O L26P_1	VCCO_1	I/O L19P_1	I/O L15P_1	I/O L14P_1	I/O	I/O L08P_1	I/O L34P_1 ◆	I/O L05P_1	I/O L03N_1	I/O L02P_1	I/O L01P_1 VRN_1	GND	GND	B
I/O L32P_1 GCLK4	I/O L28P_1	I/O L39N_1	I/O L25N_1	I/O L22N_1	I/O	GND	I/O L13N_1	I/O L10N_1 VREF_1	VCCO_1	I/O L33N_1 ◆	I/O L04N_1	I/O L03P_1	VCCO_1	GND	I/O L01N_2 VRP_2	I/O L01P_2 VRN_2	C
I/O L31N_1 VREF_1	VCCO_1	I/O L39P_1	I/O L25P_1	I/O L22P_1	I/O L18N_1	VCCO_1	I/O L13P_1	I/O L10P_1	I/O L07N_1	I/O L33P_1 ◆	I/O L04P_1	IO VREF_1	TCK	VCCO_2	I/O L02N_2	I/O L02P_2	D
I/O L31P_1	GND	VCCAUX	I/O	GND	I/O L18P_1	VCCAUX	I/O	GND	I/O L07P_1	I/O L06N_1 VREF_1	VCCAUX	GND	TDO	I/O L03N_2 VREF_2	I/O L03P_2	GND	E
I/O	I/O L27N_1	I/O L38N_1	I/O L24N_1	VCCO_1	I/O L17N_1 VREF_1	I/O L36N_1 ◆	I/O L12N_1	I/O L09N_1	I/O	I/O L06P_1	I/O	VCCAUX	I/O L04N_2	I/O L04P_2	I/O L41N_2	I/O L41P_2	F
I/O L30N_1	I/O L27P_1	I/O L38P_1	I/O L24P_1	I/O L21N_1	I/O L17P_1	I/O L36P_1 ◆	I/O L12P_1	I/O L09P_1	VCCO_1	GND	I/O L05N_2	I/O L05P_2	I/O L42N_2 ◆	I/O L42P_2 ◆	I/O	I/O	G
I/O L30P_1	VCCAUX	VCCO_1	I/O L23N_1	I/O L21P_1	I/O	VCCO_1	I/O L11N_1	I/O	TMS	VCCO_2	I/O L06N_2	I/O L06P_2	I/O L09N_2 VREF_2	VCCO_2	I/O L07N_2	I/O L07P_2	H
I/O L29N_1	GND	I/O L37N_1	I/O L23P_1	GND	I/O L16N_1	I/O L35N_1 ◆	I/O L11P_1	I/O ◆	I/O L11N_2	I/O L08N_2	I/O L08P_2	GND	I/O L09P_2	I/O L10N_2	I/O L10P_2	GND	J
I/O L29P_1	I/O	I/O L37P_1	IO VREF_1	I/O L20N_1	I/O L16P_1	I/O L35P_1 ◆	GND	I/O L11P_2	I/O L12N_2	I/O L12P_2	I/O L13N_2	I/O L13P_2 VREF_2	I/O L14N_2	I/O L14P_2	I/O L15N_2	I/O L15P_2	K
IO VREF_1	I/O	I/O	I/O	I/O L20P_1	I/O ◆	I/O	I/O L16N_2	I/O L16P_2	VCCO_2	I/O L17N_2 ◆	I/O L17P_2 VREF_2 ◆	VCCAUX	VCCO_2	GND	I/O L45N_2	I/O L45P_2	L
VCCINT	VCCO_1	VCCO_1	VCCO_1	VCCO_1	VCCINT	I/O L46N_2	I/O L46P_2	I/O L21N_2	I/O L47N_2	I/O L47P_2	I/O L19N_2	I/O L19P_2	I/O L20N_2	I/O L20P_2	I/O L48N_2	I/O L48P_2	M
GND	VCCINT	VCCINT	VCCINT	VCCINT	VCCO_2	I/O L24N_2	I/O L21P_2	GND	I/O L22N_2	I/O L22P_2	VCCO_2	GND	I/O L23N_2 VREF_2	I/O L23P_2	VCCO_2	GND	N
GND	GND	GND	GND	VCCINT	VCCO_2	I/O L24P_2	I/O L49N_2 ◆	I/O L49P_2 ◆	I/O L50N_2	I/O L50P_2	I/O L26N_2	I/O L26P_2	I/O L27N_2	I/O L27P_2	I/O L28N_2	I/O L28P_2	P
GND	GND	GND	GND	VCCINT	VCCO_2	I/O L29N_2	I/O L29P_2	I/O L33N_2	VCCO_2	I/O L30N_2	I/O L30P_2	VCCAUX	I/O L31N_2	I/O L31P_2	I/O L32N_2	I/O L32P_2	R
GND	GND	GND	GND	VCCINT	VCCO_2	I/O L51N_2 ◆	I/O L33P_2	GND	VCCAUX	I/O L34N_2 VREF_2	I/O L34P_2	GND	VCCO_2	I/O L35N_2	I/O L35P_2	GND	T
GND	GND	GND	GND	GND	VCCINT	I/O L51P_2 ◆	I/O	I/O	I/O L37N_2	I/O L37P_2	I/O L38N_2	I/O L38P_2	I/O L39N_2	I/O L39P_2	I/O L40N_2	I/O L40P_2 VREF_2	U

Bank 2

DS099-4_14b_072903

Figure 58: FG1156 Package Footprint (Top View) Continued

	1	2	3	4	5	6	7	8	9	10	11	12	13	14	15	16	17
V	I/O L40P_6 VREF_6	I/O L40N_6	I/O L39P_6	I/O L39N_6	I/O L38P_6	I/O L38N_6	I/O L52P_6	I/O L52N_6	I/O	I/O	I/O L49P_6 ◆	VCCINT	GND	GND	GND	GND	GND
W	GND	I/O L37P_6	I/O L37N_6	VCCO_6	GND	I/O L36P_6	I/O L36N_6	VCCAUX	GND	I/O L35P_6	I/O L49N_6 ◆	VCCO_6	VCCINT	GND	GND	GND	GND
Y	I/O L34P_6	I/O L34N_6 VREF_6	I/O L33P_6	I/O L33N_6	VCCAUX	I/O L48P_6	I/O L48N_6	VCCO_6	I/O L35N_6	I/O L32P_6	I/O L32N_6	VCCO_6	VCCINT	GND	GND	GND	GND
AA	I/O L31P_6	I/O L31N_6	I/O L30P_6	I/O L30N_6	I/O L29P_6	I/O L29N_6	I/O L28P_6	I/O L28N_6	I/O L46P_6 ◆	I/O L46N_6 ◆	I/O L27P_6	VCCO_6	VCCINT	GND	GND	GND	GND
AB	GND	VCCO_6	I/O L26P_6	I/O L26N_6	GND	VCCO_6	I/O L25P_6	I/O L25N_6	GND	I/O L24P_6	I/O L27N_6	VCCO_6	VCCINT	VCCINT	VCCINT	VCCINT	GND
AC	I/O L23P_6	I/O L23N_6	I/O L45P_6	I/O L45N_6	I/O L22P_6	I/O L22N_6	I/O L21P_6	I/O L21N_6	I/O L24N_6 VREF_6	I/O L20P_6	I/O L20N_6	VCCINT	VCCO_5	VCCO_5	VCCO_5	VCCO_5	VCCINT
AD	I/O L19P_6	I/O L19N_6	GND	VCCO_6	VCCAUX	I/O L44P_6 ◆	I/O L44N_6 ◆	VCCO_6	I/O L17P_6 VREF_6	I/O L17N_6	I/O	I/O ◆	I/O L16P_5	I/O	I/O	I/O	I/O
AE	I/O L16P_6	I/O L16N_6	I/O L15P_6	I/O L15N_6	I/O L14P_6	I/O L14N_6	I/O L13P_6 VREF_6	I/O L13N_6	I/O L12P_6	GND	I/O L39P_5 ◆	I/O L12P_5	I/O L16N_5	I/O	I/O L23P_5	I/O	I/O L29P_5 VREF_5
AF	GND	I/O L11P_6	I/O L11N_6	I/O L10P_6	GND	I/O L09P_6	I/O L09N_6 VREF_6	I/O L12N_6	I/O ◆	I/O L07P_5	I/O L39N_5 ◆	I/O L12N_5	GND	I/O L19P_5 VREF_5	I/O L23N_5	GND	I/O L29N_5
AG	I/O L08P_6	I/O L08N_6	VCCO_6	I/O L10N_6	I/O L07P_6	I/O L07N_6	VCCO_6	M2	I/O	I/O L07N_5	VCCO_5	I/O	I/O L17P_5	I/O L19N_5	VCCO_5	VCCAUX	I/O L30P_5
AH	I/O	I/O	I/O L41P_6 ◆	I/O L41N_6 ◆	I/O L06P_6	I/O L06N_6	GND	VCCO_5	I/O L37P_5	I/O L08P_5	I/O L40P_5 ◆	I/O L13P_5	I/O L17N_5	I/O L20P_5	I/O L24P_5	I/O L27P_5	I/O L30N_5
AJ	I/O L05P_6	I/O L05N_6	I/O L04P_6	I/O L04N_6	VCCAUX	I/O	I/O L06P_5	IO VREF_5	I/O L37N_5	I/O L08N_5	I/O L40N_5 ◆	I/O L13N_5	VCCO_5	I/O L20N_5	I/O L24N_5	I/O L27N_5 VREF_5	I/O
AK	GND	I/O L03P_6	I/O L03N_6 VREF_6	M1	GND	VCCAUX	I/O L06N_5	I/O L35P_5	GND	I/O	VCCAUX	I/O L14P_5	GND	I/O	VCCAUX	GND	I/O L31P_5 D5
AL	I/O L02P_6	I/O L02N_6	VCCO_6	M0	IO VREF_5	I/O L04P_5	I/O L33P_5 ◆	I/O L35N_5	I/O L38P_5	I/O L09P_5	VCCO_5	I/O L14N_5	I/O L18P_5	I/O L21P_5	I/O L25P_5	VCCO_5	I/O L31N_5 D4
AM	I/O L01P_6 VRN_6	I/O L01N_6 VRP_6	GND	VCCO_5	I/O L03P_5	I/O L04N_5	I/O L33N_5 ◆	VCCO_5	I/O L38N_5	I/O L09N_5	GND	I/O	I/O L18N_5	I/O L21N_5	I/O L25N_5	I/O L28P_5 D7	I/O L32P_5 GCLK2
AN	GND	GND	I/O L01P_5 CS_B	I/O L02P_5	I/O L03N_5	I/O L05P_5	I/O L34P_5 ◆	I/O L36P_5	I/O	I/O L10P_5 VRN_5	I/O L11P_5	I/O L15P_5	VCCO_5	I/O L22P_5	I/O L26P_5	I/O L28N_5 D6	I/O L32N_5 GCLK3
AP	GND	GND	I/O L01N_5 RDWR_B	I/O L02N_5	GND	I/O L05N_5	I/O L34N_5 ◆	I/O L36N_5	GND	I/O L10N_5 VRP_5	I/O L11N_5 VREF_5	I/O L15N_5	GND	I/O L22N_5	I/O L26N_5	GND	IO VREF_5

Bank 6

Bank 5

DS099-4_14c_072503

Bottom Left Corner of FG1156 Package (Top View)

Figure 59: FG1156 Package Footprint (Top View) Continued

18	19	20	21	22	23	24	25	26	27	28	29	30	31	32	33	34	
GND	GND	GND	GND	GND	VCCINT	I/O L51N_3 ◆	I/O	I/O	I/O L37P_3	I/O L37N_3	I/O L38P_3	I/O L38N_3	I/O L39P_3	I/O L39N_3	I/O L40P_3	I/O L40N_3 VREF_3	V
GND	GND	GND	GND	VCCINT	VCCO_3	I/O L51P_3 ◆	I/O L33N_3	GND	VCCAUX	I/O L34P_3 VREF_3	I/O L34N_3	GND	VCCO_3	I/O L35P_3	I/O L35N_3	GND	W
GND	GND	GND	GND	VCCINT	VCCO_3	I/O L50P_3	I/O L50N_3	I/O L33P_3	VCCO_3	I/O L30P_3	I/O L30N_3	VCCAUX	I/O L31P_3	I/O L31N_3	I/O L32P_3	I/O L32N_3	Y
GND	GND	GND	GND	VCCINT	VCCO_3	I/O L48N_3	I/O L49P_3 ◆	I/O L49N_3 ◆	I/O L26P_3	I/O L26N_3	I/O L27P_3	I/O L27N_3	I/O L28P_3	I/O L28N_3	I/O L29P_3	I/O L29N_3	AA
GND	VCCINT	VCCINT	VCCINT	VCCINT	VCCO_3	I/O L48P_3	I/O L24N_3	GND	I/O L46P_3	I/O L46N_3	VCCO_3	GND	I/O L47P_3	I/O L47N_3	VCCO_3	GND	AB
VCCINT	VCCO_4	VCCO_4	VCCO_4	VCCO_4	VCCINT	I/O L20P_3	I/O L20N_3	I/O L24P_3	I/O L21P_3	I/O L21N_3	I/O L22P_3	I/O L22N_3	I/O L23P_3 VREF_3	I/O L23N_3	I/O L45P_3	I/O L45N_3	AC
I/O	I/O	I/O	I/O L18N_4	I/O	I/O L11N_4	DONE	I/O L17P_3 VREF_3	I/O L17N_3	VCCO_3	I/O L44P_3 ◆	I/O L44N_3 ◆	VCCAUX	VCCO_3	GND	I/O L19P_3	I/O L19N_3	AD
I/O	I/O	I/O L23N_4	I/O L18P_4	I/O	I/O L11P_4	I/O ◆	GND	I/O L12N_3	I/O L13P_3	I/O L13N_3 VREF_3	I/O L14P_3	I/O L14N_3	I/O L15P_3	I/O L15N_3	I/O L16P_3	I/O L16N_3	AE
I/O L29N_4	GND	I/O L23P_4	IO VREF_4	GND	I/O L12N_4	I/O	I/O L07N_4	I/O ◆	I/O L12P_3	I/O L09P_3 VREF_3	I/O L09N_3	GND	I/O L10N_3	I/O L11P_3	I/O L11N_3	GND	AF
I/O L29P_4	VCCAUX	VCCO_4	I/O L19N_4	I/O L16N_4	I/O L12P_4	VCCO_4	I/O L07P_4	I/O	I/O	VCCO_3	I/O L07P_3	I/O L07N_3	I/O L10P_3	VCCO_3	I/O L08P_3	I/O L08N_3	AG
I/O L30N_4 D2	I/O L27N_4 DIN D0	I/O L24N_4	I/O L19P_4	I/O L16P_4	IO VREF_4	I/O L39N_4 ◆	I/O L08N_4	I/O L05N_4	VCCO_4	GND	I/O L06P_3	I/O L06N_3	I/O L41P_3 ◆	I/O L41N_3 ◆	I/O	I/O	AH
I/O L30P_4 D3	I/O L27P_4 D1	I/O L24P_4	I/O L20N_4	VCCO_4	I/O L13N_4	I/O L39P_4 ◆	I/O L08P_4	I/O L05P_4	I/O	I/O L35N_4	I/O	VCCAUX	I/O L04P_3	I/O L04N_3	I/O L05P_3	I/O L05N_3	AJ
IO VREF_4	GND	VCCAUX	I/O L20P_4	GND	I/O L13P_4	VCCAUX	I/O	GND	I/O L38N_4	I/O L35P_4	VCCAUX	GND	N.C. ◆ ■	I/O L03P_3	I/O L03N_3	GND	AK
I/O L31N_4 INIT_B	VCCO_4	I/O L25N_4	I/O L21N_4	I/O L17N_4	I/O L14N_4	VCCO_4	I/O L09N_4	I/O L06N_4 VREF_4	I/O L38P_4	I/O L36N_4 ◆	I/O L33N_4	IO VREF_4	CCLK	VCCO_3	I/O L02P_3	I/O L02N_3 VREF_3	AL
I/O L31P_4 DOUT BUSY	I/O L28N_4	I/O L25P_4	I/O L21P_4	I/O L17P_4	I/O L14P_4	GND	I/O L09P_4	I/O L06P_4	VCCO_4	I/O L36P_4 ◆	I/O L33P_4	I/O L03N_4	VCCO_4	GND	I/O L01P_3 VRN_3	I/O L01N_3 VRP_3	AM
I/O L32N_4 GCLK1	I/O L28P_4	I/O L26N_4	I/O L22N_4 VREF_4	VCCO_4	I/O L15N_4	I/O L40N_4 ◆	I/O L10N_4	I/O	I/O L04N_4	I/O L37N_4 ◆	I/O L34N_4	I/O L03P_4	I/O L02N_4	I/O L01N_4 VRP_4	GND	GND	AN
I/O L32P_4 GCLK0	GND	I/O L26P_4 VREF_4	I/O L22P_4	GND	I/O L15P_4	I/O L40P_4 ◆	I/O L10P_4	GND	I/O L04P_4	I/O L37P_4 ◆	I/O L34P_4	GND	I/O L02P_4	I/O L01P_4 VRN_4	GND	GND	AP

Bank 3

Bank 4

DS099-4_14d_072903

Bottom Right Corner of FG1156 Package (Top View)

Figure 60: FG1156 Package Footprint (Top View) Continued

Revision History

Date	Version	Description
04/03/2003	1.0	Initial Xilinx release.
04/21/2003	1.1	Added information on the VQ100 package footprint, including a complete pinout table (Table 87) and footprint diagram (Figure 44). Updated Table 85 with final I/O counts for the VQ100 package. Also added final differential I/O pair counts for the TQ144 package. Added clarifying comments to HSWAP_EN pin description on page 119. Updated the footprint diagram for the FG900 package shown in Figure 55a and Figure 55b. Some thick lines separating I/O banks were incorrect. Made cosmetic changes to Figure 40, Figure 42, and Figure 43. Updated Xilinx hypertext links. Added XC3S200 and XC3S400 to Pin Name column in Table 91.
05/12/2003	1.1.1	AM32 pin was missing GND label in FG1156 package diagram (Figure 53).
07/11/2003	1.1.2	Corrected misspellings of GCLK in Table 69 and Table 70. Changed CMOS25 to LVCMOS25 in Dual-Purpose Pin I/O Standard During Configuration section. Clarified references to Module 2. For XC3S5000 in FG1156 package, corrected N.C. symbol to a black square in Table 110, key, and package drawing.
07/29/2003	1.2	Corrected pin names on FG1156 package. Some package balls incorrectly included LVDS pair names. The affected balls on the FG1156 package include G1, G2, G33, G34, U9, U10, U25, U26, V9, V10, V25, V26, AH1, AH2, AH33, AH34. The number of LVDS pairs is unaffected. Modified affected balls and re-sorted rows in Table 110. Updated affected balls in Figure 53. Also updated ASCII and Excel electronic versions of FG1156 pinout.
08/19/2003	1.2.1	Removed 100 MHz ConfigRate option in CCLK: Configuration Clock section and in Table 80. Added note that TDO is a totem-pole output in Table 77.
10/09/2003	1.2.2	Some pins had incorrect bank designations and were improperly sorted in Table 93. No pin names or functions changed. Renamed DCI_IN to DCI and added black diamond to N.C. pins in Table 93. In Figure 47, removed some extraneous text from pin 106 and corrected spelling of pins 45, 48, and 81.
12/17/2003	1.3	Added FG320 pin tables and pinout diagram (FG320: 320-lead Fine-pitch Ball Grid Array). Made cosmetic changes to the TQ144 footprint (Figure 46), the PQ208 footprint (Figure 47), the FG676 footprint (Figure 53), and the FG900 footprint (Figure 55). Clarified wording in Precautions When Using the JTAG Port in 3.3V Environments section.
02/27/2004	1.4	Clarified wording in Using JTAG Port After Configuration section. In Table 81, reduced package height for FG320 and increased maximum I/O values for the FG676, FG900, and FG1156 packages.
07/13/2004	1.5	Added information on lead-free (Pb-free) package options to the Package Overview section plus Table 81 and Table 83. Clarified the VRN_# reference resistor requirements for I/O standards that use single termination as described in the DCI Termination Types section and in Figure 42b. Graduated from Advance Product Specification to Product Specification.
08/24/2004	1.5.1	Removed XC3S2000 references from FG1156: 1156-lead Fine-pitch Ball Grid Array.
01/17/2005	1.6	Added XC3S50 in CP132 package option. Added XC3S2000 in FG456 package option. Added XC3S4000 in FG676 package option. Added Selecting the Right Package Option section. Modified or added Table 81, Table 83, Table 84, Table 85, Table 89, Table 90, Table 100, Table 102, Table 103, Table 106, Figure 45, and Figure 53.
08/19/2005	1.7	Removed term “weak” from the description of pull-up and pull-down resistors. Added IDCODE Register values. Added signal integrity precautions to CCLK: Configuration Clock and indicated that CCLK should be treated as an I/O during Master mode in Table 79.
04/03/2006	2.0	Added Package Thermal Characteristics. Updated Figure 41 to make it a more obvious example. Added detail about which pins have dedicated pull-up resistors during configuration, regardless of the HSWAP_EN value to Table 70 and to Pin Behavior During Configuration. Updated Precautions When Using the JTAG Port in 3.3V Environments.
04/26/2006	2.1	Corrected swapped data row in Table 86. The Theta-JA with zero airflow column was swapped with the Theta-JC column. Made additional notations on CONFIG and JTAG pins that have pull-up resistors during configuration, regardless of the HSWAP_EN input.
05/25/2007	2.2	Added link on page 128 to Material Declaration Data Sheets. Corrected units typo in Table 74. Added Note 1 to Table 103 about VREF for XC3S1500 in FG676.

Date	Version	Description
11/30/2007	2.3	Added XC3S5000 FG(G)676 package. Noted that the FG(G)1156 package is being discontinued. Updated Table 86 with latest thermal characteristics data.
06/25/2008	2.4	Updated formatting and links.
12/04/2009	2.5	Added link to UG332 in CCLK: Configuration Clock. Noted that the CP132, CPG132, FG1156, and FGG1156 packages are being discontinued in Table 81, Table 83, Table 84, Table 85, and Table 86. Updated CP132: 132-Ball Chip-Scale Package to indicate that the CP132 and CPG132 packages are being discontinued.
10/29/2012	3.0	Added Notice of Disclaimer. Per XCN07022, updated the FG1156 and FGG1156 package discussion throughout document including in Table 81, Table 83, Table 84, Table 85, and Table 86. Per XCN08011, updated CP132 and CPG132 package discussion throughout document including in Table 81, Table 83, Table 84, Table 85, and Table 86. This product is not recommended for new designs.
06/27/2013	3.1	Removed banner. This product IS recommended for new designs.

Notice of Disclaimer

THE XILINX HARDWARE FPGA AND CPLD DEVICES REFERRED TO HEREIN (“PRODUCTS”) ARE SUBJECT TO THE TERMS AND CONDITIONS OF THE XILINX LIMITED WARRANTY WHICH CAN BE VIEWED AT http://www.xilinx.com/warranty.htm. THIS LIMITED WARRANTY DOES NOT EXTEND TO ANY USE OF PRODUCTS IN AN APPLICATION OR ENVIRONMENT THAT IS NOT WITHIN THE SPECIFICATIONS STATED IN THE XILINX DATA SHEET. ALL SPECIFICATIONS ARE SUBJECT TO CHANGE WITHOUT NOTICE. PRODUCTS ARE NOT DESIGNED OR INTENDED TO BE FAIL-SAFE OR FOR USE IN ANY APPLICATION REQUIRING FAIL-SAFE PERFORMANCE, SUCH AS LIFE-SUPPORT OR SAFETY DEVICES OR SYSTEMS, OR ANY OTHER APPLICATION THAT INVOKES THE POTENTIAL RISKS OF DEATH, PERSONAL INJURY, OR PROPERTY OR ENVIRONMENTAL DAMAGE (“CRITICAL APPLICATIONS”). USE OF PRODUCTS IN CRITICAL APPLICATIONS IS AT THE SOLE RISK OF CUSTOMER, SUBJECT TO APPLICABLE LAWS AND REGULATIONS.

CRITICAL APPLICATIONS DISCLAIMER

XILINX PRODUCTS (INCLUDING HARDWARE, SOFTWARE AND/OR IP CORES) ARE NOT DESIGNED OR INTENDED TO BE FAIL-SAFE, OR FOR USE IN ANY APPLICATION REQUIRING FAIL-SAFE PERFORMANCE, SUCH AS IN LIFE-SUPPORT OR SAFETY DEVICES OR SYSTEMS, CLASS III MEDICAL DEVICES, NUCLEAR FACILITIES, APPLICATIONS RELATED TO THE DEPLOYMENT OF AIRBAGS, OR ANY OTHER APPLICATIONS THAT COULD LEAD TO DEATH, PERSONAL INJURY OR SEVERE PROPERTY OR ENVIRONMENTAL DAMAGE (INDIVIDUALLY AND COLLECTIVELY, “CRITICAL APPLICATIONS”). FURTHERMORE, XILINX PRODUCTS ARE NOT DESIGNED OR INTENDED FOR USE IN ANY APPLICATIONS THAT AFFECT CONTROL OF A VEHICLE OR AIRCRAFT, UNLESS THERE IS A FAIL-SAFE OR REDUNDANCY FEATURE (WHICH DOES NOT INCLUDE USE OF SOFTWARE IN THE XILINX DEVICE TO IMPLEMENT THE REDUNDANCY) AND A WARNING SIGNAL UPON FAILURE TO THE OPERATOR. CUSTOMER AGREES, PRIOR TO USING OR DISTRIBUTING ANY SYSTEMS THAT INCORPORATE XILINX PRODUCTS, TO THOROUGHLY TEST THE SAME FOR SAFETY PURPOSES. TO THE MAXIMUM EXTENT PERMITTED BY APPLICABLE LAW, CUSTOMER ASSUMES THE SOLE RISK AND LIABILITY OF ANY USE OF XILINX PRODUCTS IN CRITICAL APPLICATIONS.

AUTOMOTIVE APPLICATIONS DISCLAIMER

XILINX PRODUCTS ARE NOT DESIGNED OR INTENDED TO BE FAIL-SAFE, OR FOR USE IN ANY APPLICATION REQUIRING FAIL-SAFE PERFORMANCE, SUCH AS APPLICATIONS RELATED TO: (I) THE DEPLOYMENT OF AIRBAGS, (II) CONTROL OF A VEHICLE, UNLESS THERE IS A FAIL-SAFE OR REDUNDANCY FEATURE (WHICH DOES NOT INCLUDE USE OF SOFTWARE IN THE XILINX DEVICE TO IMPLEMENT THE REDUNDANCY) AND A WARNING SIGNAL UPON FAILURE TO THE OPERATOR, OR (III) USES THAT COULD LEAD TO DEATH OR PERSONAL INJURY. CUSTOMER ASSUMES THE SOLE RISK AND LIABILITY OF ANY USE OF XILINX PRODUCTS IN SUCH APPLICATIONS.