Spartan-IIE FPGA Family Data Sheet

DS077 June 18, 2008 **Product Specification**

This document includes all four modules of the Spartan®-IIE FPGA data sheet.

Module 1: Introduction and Ordering Information

DS077-1 (v2.3) June 18, 2008

- Introduction
- Features
- General Overview
- Product Availability
- User I/O Chart
- Ordering Information

Module 2: Functional Description

DS077-2 (v2.3) June 18, 2008

- Architectural Description
  - Spartan-IIE Array
  - Input/Output Block
  - Configurable Logic Block
  - Block RAM
  - Clock Distribution: Delay-Locked Loop
  - Boundary Scan
- Development System
- Configuration

Module 3: DC and Switching Characteristics

DS077-3 (v2.3) June 18, 2008

- DC Specifications
  - Absolute Maximum Ratings
  - Recommended Operating Conditions
  - DC Characteristics
  - Power-On Requirements
  - DC Input and Output Levels
- Switching Characteristics
  - Pin-to-Pin Parameters
  - IOB Switching Characteristics
  - Clock Distribution Characteristics
  - DLL Timing Parameters
  - CLB Switching Characteristics
  - Block RAM Switching Characteristics
  - TBUF Switching Characteristics
  - JTAG Switching Characteristics
  - Configuration Switching Characteristics

Module 4: Pinout Tables

DS077-4 (2.3) June 18, 2008

- Pin Definitions
- Pinout Tables

IMPORTANT NOTE: *The Spartan-IIE FPGA data sheet is in four modules. Each module has its own Revision History at the end. Use the PDF "Bookmarks" for easy navigation in this volume.*

© 2003-2008 Xilinx, Inc. All rights reserved. XILINX, the Xilinx logo, the Brand Window, and other designated brands included herein are trademarks of Xilinx, Inc. All other trademarks are the property of their respective owners.

Spartan-IIE FPGA Family: Introduction and Ordering Information

DS077-1 (v2.3) June 18, 2008

Product Specification

Introduction

The Spartan®-IIE Field-Programmable Gate Array family gives users high performance, abundant logic resources, and a rich feature set, all at an exceptionally low price. The seven-member family offers densities ranging from 50,000 to 600,000 system gates, as shown in Table 1. System performance is supported beyond 200 MHz.

Features include block RAM (to 288K bits), distributed RAM (to 221,184 bits), 19 selectable I/O standards, and four DLLs (Delay-Locked Loops). Fast, predictable interconnect means that successive design iterations continue to meet timing requirements.

The Spartan-IIE family is a superior alternative to mask-programmed ASICs. The FPGA avoids the initial cost, lengthy development cycles, and inherent risk of conventional ASICs. Also, FPGA programmability permits design upgrades in the field with no hardware replacement necessary (impossible with ASICs).

Features

- Second generation ASIC replacement technology
  - Densities as high as 15,552 logic cells with up to 600,000 system gates
  - Streamlined features based on Virtex®-E FPGA architecture
  - Unlimited in-system reprogrammability
  - Very low cost
  - Cost-effective 0.15 micron technology
- System level features
  - SelectRAM™ hierarchical memory:
    - 16 bits/LUT distributed RAM
    - Configurable 4K-bit true dual-port block RAM
    - Fast interfaces to external RAM
  - Fully 3.3V PCI compliant to 64 bits at 66 MHz and CardBus compliant
  - Low-power segmented routing architecture
  - Dedicated carry logic for high-speed arithmetic
  - Efficient multiplier support
  - Cascade chain for wide-input functions
  - Abundant registers/latches with enable, set, reset
  - Four dedicated DLLs for advanced clock control
    - Eliminate clock distribution delay
    - Multiply, divide, or phase shift
  - Four primary low-skew global clock distribution nets
  - IEEE 1149.1 compatible boundary scan logic
- Versatile I/O and packaging
  - Pb-free package options
  - Low-cost packages available in all densities
  - Family footprint compatibility in common packages
  - 19 high-performance interface standards
    - LVTTL, LVCMOS, HSTL, SSTL, AGP, CTT, GTL
    - LVDS and LVPECL differential I/O
  - Up to 205 differential I/O pairs that can be input, output, or bidirectional
  - Hot swap I/O (CompactPCI friendly)
- Core logic powered at 1.8V and I/Os powered at 1.5V, 2.5V, or 3.3V
- Fully supported by powerful Xilinx® ISE® development system
  - Fully automatic mapping, placement, and routing
  - Integrated with design entry and verification tools
  - Extensive IP library including DSP functions and soft processors

Table 1: **Spartan-IIE FPGA Family Members**

Device	Logic Cells	Typical System Gate Range (Logic and RAM)	CLB Array (R x C)	Total CLBs	Maximum Available User I/O(1)	Maximum Differential I/O Pairs	Distributed RAM Bits	Block RAM Bits
XC2S50E	1,728	23,000 - 50,000	16 x 24	384	182	83	24,576	32K
XC2S100E	2,700	37,000 - 100,000	20 x 30	600	202	86	38,400	40K
XC2S150E	3,888	52,000 - 150,000	24 x 36	864	265	114	55,296	48K
XC2S200E	5,292	71,000 - 200,000	28 x 42	1,176	289	120	75,264	56K
XC2S300E	6,912	93,000 - 300,000	32 x 48	1,536	329	120	98,304	64K
XC2S400E	10,800	145,000 - 400,000	40 x 60	2,400	410	172	153,600	160K
XC2S600E	15,552	210,000 - 600,000	48 x 72	3,456	514	205	221,184	288K

Notes:

1. User I/O counts include the four global clock/user input pins. See details in Table 2, page 5

© 2003-2008 Xilinx, Inc. All rights reserved. XILINX, the Xilinx logo, the Brand Window, and other designated brands included herein are trademarks of Xilinx, Inc. All other trademarks are the property of their respective owners.

General Overview

The Spartan-IIE family of FPGAs have a regular, flexible, programmable architecture of Configurable Logic Blocks (CLBs), surrounded by a perimeter of programmable Input/Output Blocks (IOBs). There are four Delay-Locked Loops (DLLs), one at each corner of the die. Two columns of block RAM lie on opposite sides of the die, between the CLBs and the IOB columns. The XC2S400E has four columns and the XC2S600E has six columns of block RAM. These functional elements are interconnected by a powerful hierarchy of versatile routing channels (see Figure 1).

Spartan-IIE FPGAs are customized by loading configuration data into internal static memory cells. Unlimited reprogramming cycles are possible with this approach. Stored values in these cells determine logic functions and interconnections implemented in the FPGA. Configuration data can be read from an external serial PROM (master serial mode), or written into the FPGA in slave serial, slave parallel, or Boundary Scan modes. Xilinx offers multiple types of low-cost configuration solutions including the Platform Flash in-system programmable configuration PROMs.

Spartan-IIE FPGAs are typically used in high-volume applications where the versatility of a fast programmable solution adds benefits. Spartan-IIE FPGAs are ideal for shortening product development cycles while offering a cost-effective solution for high volume production.

Spartan-IIE FPGAs achieve high-performance, low-cost operation through advanced architecture and semiconductor technology. Spartan-IIE devices provide system clock rates beyond 200 MHz. In addition to the conventional benefits of high-volume programmable logic solutions, Spartan-IIE FPGAs also offer on-chip synchronous single-port and dual-port RAM (block and distributed form), DLL clock drivers, programmable set and reset on all flip-flops, fast carry logic, and many other features.

Spartan-IIE Family Compared to Spartan-II Family

- Higher density and more I/O
- Higher performance
- Unique pinouts in cost-effective packages
- Differential signaling
  - LVDS, Bus LVDS, LVPECL
- V_{CCINT} = 1.8V
  - Lower power
  - 5V tolerance with external resistor
  - 3V tolerance directly
- PCI, LVTTL, and LVCMOS2 input buffers powered by V_{CCO} instead of V_{CCINT}
- Unique larger bitstream

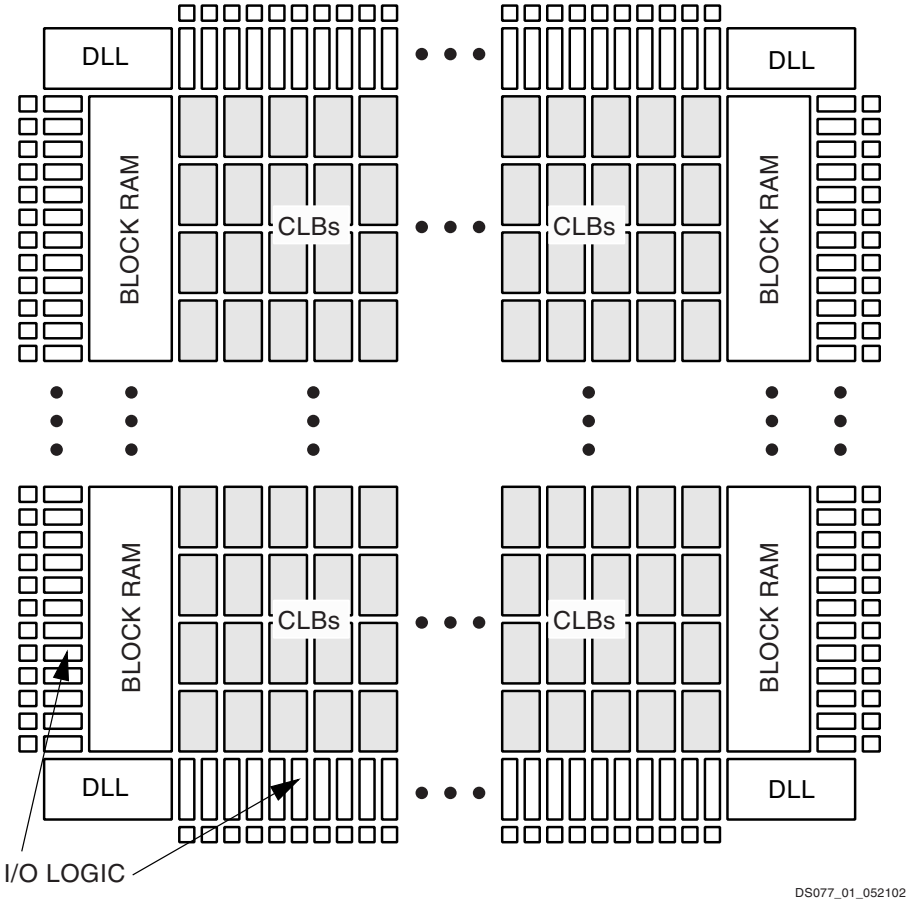

Figure 1: **Basic Spartan-IIE Family FPGA Block Diagram**

Spartan-IIE Product Availability

Table 2 shows the maximum user I/Os available on the device and the number of user I/Os available for each device/package combination.

Table 2: **Spartan-IIE FPGA User I/O Chart**

Device	Maximum User I/O	Available User I/O According to Package Type				
		TQ144 TQG144	PQ208 PQG208	FT256 FTG256	FG456 FGG456	FG676 FGG676
XC2S50E	182	102	146	182	-	-
XC2S100E	202	102	146	182	202	-
XC2S150E	265	-	146	182	265	-
XC2S200E	289	-	146	182	289	-
XC2S300E	329	-	146	182	329	-
XC2S400E	410	-	-	182	329	410
XC2S600E	514	-	-	-	329	514

Notes:
1. User I/O counts include the four global clock/user input pins.

Ordering Information

Spartan-IIE devices are available in both standard and Pb-free packaging options for all device/package combinations. The Pb-free packages include a special "G" character in the ordering code.

Standard Packaging

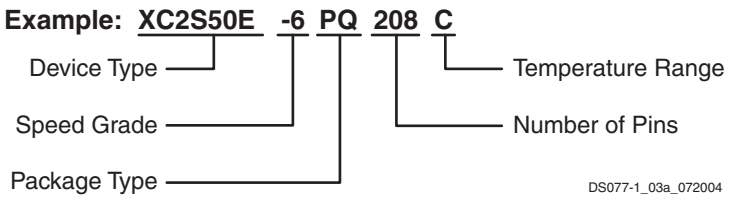

Pb-Free Packaging

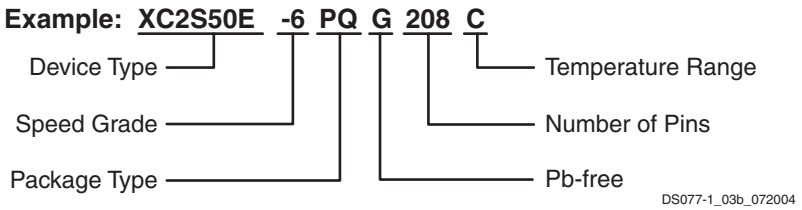

Device Ordering Options

Device
XC2S50E
XC2S100E
XC2S150E
XC2S200E
XC2S300E
XC2S400E
XC2S600E

Speed Grade	
-6	Standard Performance
-7	Higher Performance(1)

Package Type / Number of Pins	
TQ(G)144	144-pin Plastic Thin QFP
PQ(G)208	208-pin Plastic QFP
FT(G)256	256-ball Fine Pitch BGA
FG(G)456	456-ball Fine Pitch BGA
FG(G)676	676-ball Fine Pitch BGA

Temperature Range (T_J)(2)	
C = Commercial	0°C to +85°C
I = Industrial	–40°C to +100°C

Notes:
1. The -7 speed grade is exclusively available in the Commercial temperature range.
2. See www.xilinx.com for information on automotive temperature range devices.

Device Part Marking

Figure 2 is a top marking example for Spartan-IIE FPGAs in the quad-flat packages. The markings for BGA packages are nearly identical to those for the quad-flat packages, except that the marking is rotated with respect to the ball A1 indicator.

The "7C" and "6I" Speed Grade/Temperature Range part combinations may be dual marked as "7C/6I". Devices with the dual mark can be used as either -7C or -6I devices. Devices with a single mark are only guaranteed for the marked speed grade and temperature range.

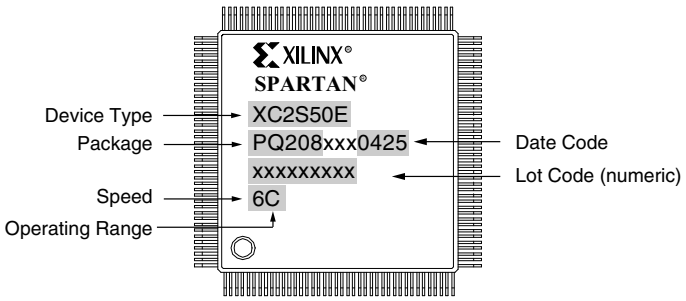

Sample package with part marking for XC2S50E-6PQ208C.

Figure 2: **Spartan-IIE QFP Marking Example**

Revision History

Date	Version No.	Description
06/27/02	1.1	Updated -7 availability.
11/18/02	2.0	Added XC2S400E and XC2S600E. Corrected XC2S150E max I/O count and XC2S50E differential I/O count and updated availability.
07/09/03	2.1	Noted hot-swap capability. Updated Table 2 to show that all products are available. Clarified device part marking.
07/28/04	2.2	Added information on Pb-free packaging options.
06/18/08	2.3	Added dual mark information in Device Part Marking. Updated all modules for continuous page, figure, and table numbering. Updated links. Synchronized all modules to v2.3.

Architectural Description

Spartan-IIE FPGA Array

The Spartan®-IIE user-programmable gate array, shown in Figure 3, is composed of five major configurable elements:

- IOBs provide the interface between the package pins and the internal logic
- CLBs provide the functional elements for constructing most logic
- Dedicated block RAM memories of 4096 bits each
- Clock DLLs for clock-distribution delay compensation and clock domain control
- Versatile multi-level interconnect structure

As can be seen in Figure 3, the CLBs form the central logic structure with easy access to all support and routing structures. The IOBs are located around all the logic and memory elements for easy and quick routing of signals on and off the chip.

Values stored in static memory cells control all the configurable logic elements and interconnect resources. These values load into the memory cells on power-up, and can reload if necessary to change the function of the device.

Each of these elements will be discussed in detail in the following sections.

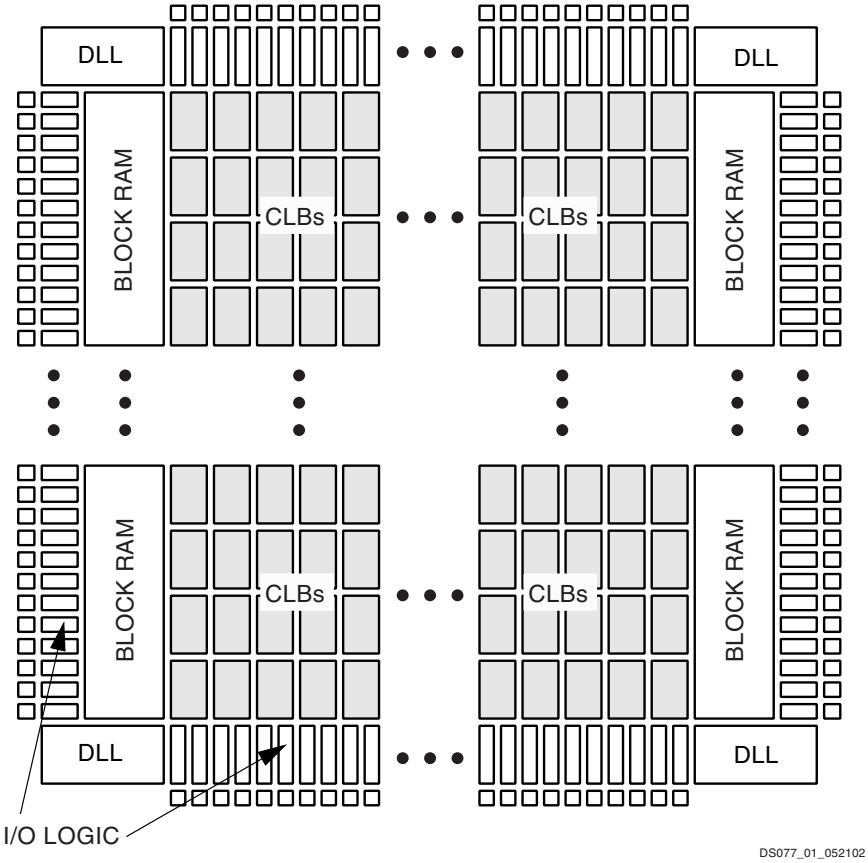

Figure 3: **Basic Spartan-IIE Family FPGA Block Diagram**

© 2003-2007 Xilinx, Inc. All rights reserved. XILINX, the Xilinx logo, the Brand Window, and other designated brands included herein are trademarks of Xilinx, Inc. All other trademarks are the property of their respective owners.

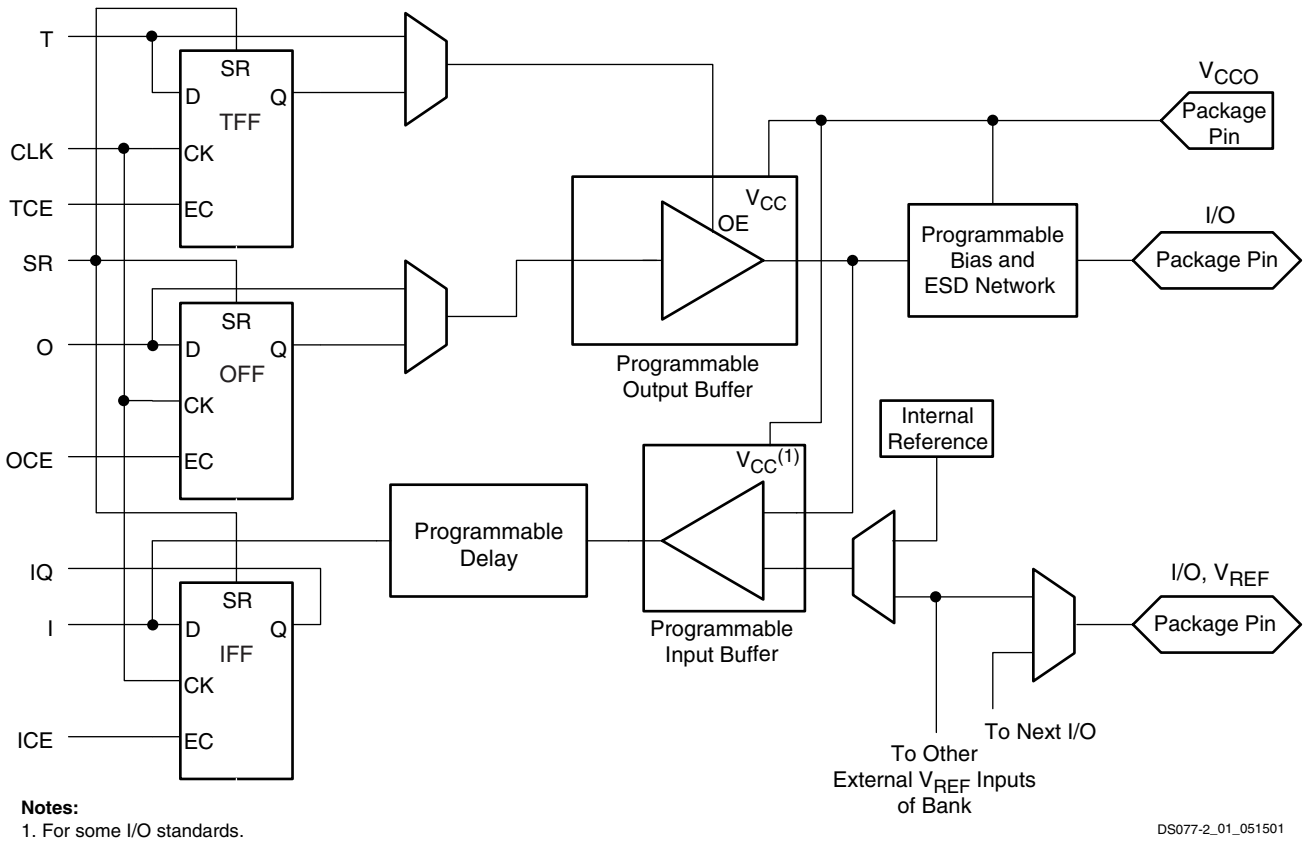

Figure 4: **Spartan-IIE Input/Output Block (IOB)**

Table 3: **Standards Supported by I/O (Typical Values)**

I/O Standard	Input Reference Voltage (V_{REF})	Input Voltage (V_{CCO})	Output Source Voltage (V_{CCO})	Board Termination Voltage (V_{TT})
LVTTL (2-24 mA)	N/A	3.3	3.3	N/A
LVCMOS2	N/A	2.5	2.5	N/A
LVCMOS18	N/A	1.8	1.8	N/A
PCI (3V, 33 MHz/66 MHz)	N/A	3.3	3.3	N/A
GTL	0.8	N/A	N/A	1.2
GTL+	1.0	N/A	N/A	1.5
HSTL Class I	0.75	N/A	1.5	0.75
HSTL Class III	0.9	N/A	1.5	1.5
HSTL Class IV	0.9	N/A	1.5	1.5
SSTL3 Class I and II	1.5	N/A	3.3	1.5
SSTL2 Class I and II	1.25	N/A	2.5	1.25
CTT	1.5	N/A	3.3	1.5
AGP	1.32	N/A	3.3	N/A
LVDS, Bus LVDS	N/A	N/A	2.5	N/A
LVPECL	N/A	N/A	3.3	N/A

Input/Output Block

The Spartan-IIE FPGA IOB, as seen in Figure 4, features inputs and outputs that support a wide variety of I/O signaling standards. These high-speed inputs and outputs are capable of supporting various state of the art memory and bus interfaces. The default standard is LVTTL. Table 3 lists several of the standards which are supported along with the required reference (V_{REF}), output (V_{CCO}) and board termination (V_{TT}) voltages needed to meet the standard. For more details on the I/O standards and termination application examples, see XAPP179, "*Using SelectIO Interfaces in Spartan-II and Spartan-IIE FPGAs*."

The three IOB registers function either as edge-triggered D-type flip-flops or as level-sensitive latches. Each IOB has a clock signal (CLK) shared by the three registers and independent Clock Enable (CE) signals for each register.

In addition to the CLK and CE control signals, the three registers share a Set/Reset (SR). For each register, this signal can be independently configured as a synchronous Set, a synchronous Reset, an asynchronous Preset, or an asynchronous Clear.

A feature not shown in the block diagram, but controlled by the software, is polarity control. The input and output buffers and all of the IOB control signals have independent polarity controls.

Optional pull-up and pull-down resistors and an optional weak-keeper circuit are attached to each user I/O pad. Prior to configuration all outputs not involved in configuration are forced into their high-impedance state. The pull-down resistors and the weak-keeper circuits are inactive, but inputs may optionally be pulled up. The activation of pull-up resistors prior to configuration is controlled on a global basis by the configuration mode pins. If the pull-up resistors are not activated, all the pins will float. Consequently, external pull-up or pull-down resistors must be provided on pins required to be at a well-defined logic level prior to configuration.

All pads are protected against damage from electrostatic discharge (ESD) and from over-voltage transients. After configuration, clamping diodes are connected to V_{CCO} for LVTTL, PCI, HSTL, SSTL, CTT, and AGP standards.

All Spartan-IIE FPGA IOBs support IEEE 1149.1-compatible boundary scan testing.

Input Path

A buffer in the IOB input path routes the input signal directly to internal logic and through an optional input flip-flop.

An optional delay element at the D-input of this flip-flop eliminates pad-to-pad hold time. The delay is matched to the internal clock-distribution delay of the FPGA, and when used, assures that the pad-to-pad hold time is zero.

Each input buffer can be configured to conform to any of the low-voltage signaling standards supported. In some of these standards the input buffer utilizes a user-supplied threshold voltage, V_{REF}. The need to supply V_{REF} imposes constraints on which standards can used in close proximity to each other. See I/O Banking.

There are optional pull-up and pull-down resistors at each input for use after configuration.

Output Path

The output path includes a 3-state output buffer that drives the output signal onto the pad. The output signal can be routed to the buffer directly from the internal logic or through an optional IOB output flip-flop.

The 3-state control of the output can also be routed directly from the internal logic or through a flip-flip that provides synchronous enable and disable.

Each output driver can be individually programmed for a wide range of low-voltage signaling standards. Each output buffer can source up to 24 mA and sink up to 48 mA. Drive strength and slew rate controls minimize bus transients. The default output driver is LVTTL with 12 mA drive strength and slow slew rate.

In most signaling standards, the output high voltage depends on an externally supplied V_{CCO} voltage. The need to supply V_{CCO} imposes constraints on which standards can be used in close proximity to each other. See I/O Banking.

An optional weak-keeper circuit is connected to each output. When selected, the circuit monitors the voltage on the pad and weakly drives the pin High or Low to match the input signal. If the pin is connected to a multiple-source signal, the weak keeper holds the signal in its last state if all drivers are disabled. Maintaining a valid logic level in this way helps eliminate bus chatter.

Because the weak-keeper circuit uses the IOB input buffer to monitor the input level, an appropriate V_{REF} voltage must be provided if the signaling standard requires one. The provision of this voltage must comply with the I/O banking rules.

I/O Banking

Some of the I/O standards described above require V_{CCO} and/or V_{REF} voltages. These voltages are externally supplied and connected to device pins that serve groups of IOBs, called banks. Consequently, restrictions exist about which I/O standards can be combined within a given bank.

Eight I/O banks result from separating each edge of the FPGA into two banks (see Figure 5). The pinout tables show the bank affiliation of each I/O (see Pinout Tables, page 53). Each bank has multiple V_{CCO} pins which must be connected to the same voltage. Voltage requirements are determined by the output standards in use.

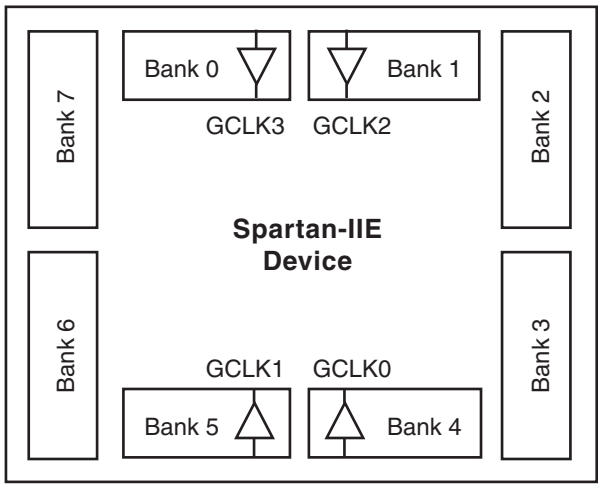

Figure 5: **Spartan-IIE I/O Banks**

In the TQ144 and PQ208 packages, the eight banks have V_{CCO} connected together. Thus, only one V_{CCO} level is allowed in these packages, although different V_{REF} values are allowed in each of the eight banks.

Within a bank, standards may be mixed only if they use the same V_{CCO}. Compatible standards are shown in Table 4. GTL and GTL+ appear under all voltages because their open-drain outputs do not depend on V_{CCO}. Note that V_{CCO}

is required for most output standards and for LVTTL, LVCMOS, and PCI inputs.

Table 4: **Compatible Standards**

V_{CCO}	Compatible Standards
3.3V	PCI, LVTTL, SSTL3 I, SSTL3 II, CTT, AGP, LVPECL, GTL, GTL+
2.5V	SSTL2 I, SSTL2 II, LVCMOS2, LVDS, Bus LVDS, GTL, GTL+
1.8V	LVCMOS18, GTL, GTL+
1.5V	HSTL I, HSTL III, HSTL IV, GTL, GTL+

Some input standards require a user-supplied threshold voltage, V_{REF}. In this case, certain user-I/O pins are automatically configured as inputs for the V_{REF} voltage. About one in six of the I/O pins in the bank assume this role.

V_{REF} pins within a bank are interconnected internally and consequently only one V_{REF} voltage can be used within each bank. All V_{REF} pins in the bank, however, must be connected to the external voltage source for correct operation.

In a bank, inputs requiring V_{REF} can be mixed with those that do not but only one V_{REF} voltage may be used within a bank. The V_{CCO} and V_{REF} pins for each bank appear in the device pinout tables.

Within a given package, the number of V_{REF} and V_{CCO} pins can vary depending on the size of device. In larger devices, more I/O pins convert to V_{REF} pins. Since these are always a superset of the V_{REF} pins used for smaller devices, it is possible to design a PCB that permits migration to a larger device. All V_{REF} pins for the largest device anticipated must be connected to the V_{REF} voltage, and not used for I/O.

Table 5: **I/O Banking**

Package	TQ144, PQ208	FT256, FG456, FG676
V_{CCO} Banks	Interconnected as 1	8 independent
V_{REF} Banks	8 independent	8 independent

See Xilinx® Application Note XAPP179 for more information on I/O resources.

Hot Swap, Hot Insertion, Hot Socketing Support

The I/O pins support hot swap — also called hot insertion and hot socketing — and are considered CompactPCI Friendly according to the PCI Bus v2.2 Specification. Consequently, an unpowered Spartan-IIE FPGA can be plugged directly into a powered system or backplane without affecting or damaging the system or the FPGA. The hot swap functionality is built into every XC2S150E, XC2S400E, and XC2S600E device. All other Spartan-IIE devices built after Product Change Notice PCN2002-05 also include hot swap functionality.

To support hot swap, Spartan-IIE devices include the following I/O features.

- Signals can be applied to Spartan-IIE FPGA I/O pins before powering the FPGA's V_{CCINT} or V_{CCO} supply inputs.
- Spartan-IIE FPGA I/O pins are high-impedance (i.e., three-stated) before and throughout the power-up and configuration processes when employing a configuration mode that does not enable the preconfiguration weak pull-up resistors (see Table 11, page 22).
- There is no current path from the I/O pin back to the V_{CCINT} or V_{CCO} voltage supplies.
- Spartan-IIE FPGAs are immune to latch-up during hot swap.

Once connected to the system, each pin adds a small amount of capacitance (C_{IN}). Likewise, each I/O consumes a small amount of DC current, equivalent to the input leakage specification (I_L). There also may be a small amount of temporary AC current (I_{HSPO}) when the pin input voltage exceeds V_{CCO} plus 0.4V, which lasts less than 10 ns.

A weak-keeper circuit within each user-I/O pin is enabled during the last frame of configuration data and has no noticeable effect on robust system signals driven by an active driver or a strong pull-up or pull-down resistor. Undriven or floating system signals may be affected. The specific effect depends on how the I/O pin is configured. User-I/O pins configured as outputs or enabled outputs have a weak pull-up resistor to V_{CCO} during the last configuration frame. User-I/O pins configured as inputs or bidirectional I/Os have weak pull-down resistors. The weak-keeper circuit turns off when the DONE pin goes High, provided that it is not used in the configured application.

Configurable Logic Block

The basic building block of the Spartan-IIE FPGA CLB is the logic cell (LC). An LC includes a 4-input function generator, carry logic, and storage element. The output from the function generator in each LC drives the CLB output or the D input of the flip-flop. Each Spartan-IIE FPGA CLB contains four LCs, organized in two similar slices; a single slice is shown in Figure 6.

In addition to the four basic LCs, the Spartan-IIE FPGA CLB contains logic that combines function generators to provide functions of five or six inputs.

Look-Up Tables

Spartan-IIE FPGA function generators are implemented as 4-input look-up tables (LUTs). In addition to operating as a function generator, each LUT can provide a 16 x 1-bit synchronous RAM. Furthermore, the two LUTs within a slice can be combined to create a 16 x 2-bit or 32 x 1-bit synchronous RAM, or a 16 x 1-bit dual-port synchronous RAM.

The Spartan-IIE FPGA LUT can also provide a 16-bit shift register that is ideal for capturing high-speed or burst-mode data. This mode can also be used to store data in applications such as Digital Signal Processing.

Storage Elements

Storage elements in the Spartan-IIE FPGA slice can be configured either as edge-triggered D-type flip-flops or as level-sensitive latches. The D inputs can be driven either by function generators within the slice or directly from slice inputs, bypassing the function generators.

In addition to Clock and Clock Enable signals, each slice has synchronous set and reset signals (SR and BY). SR forces a storage element into the initialization state specified for it in the configuration. BY forces it into the opposite state. Alternatively, these signals may be configured to operate asynchronously.

All control signals are independently invertible, and are shared by the two flip-flops within the slice.

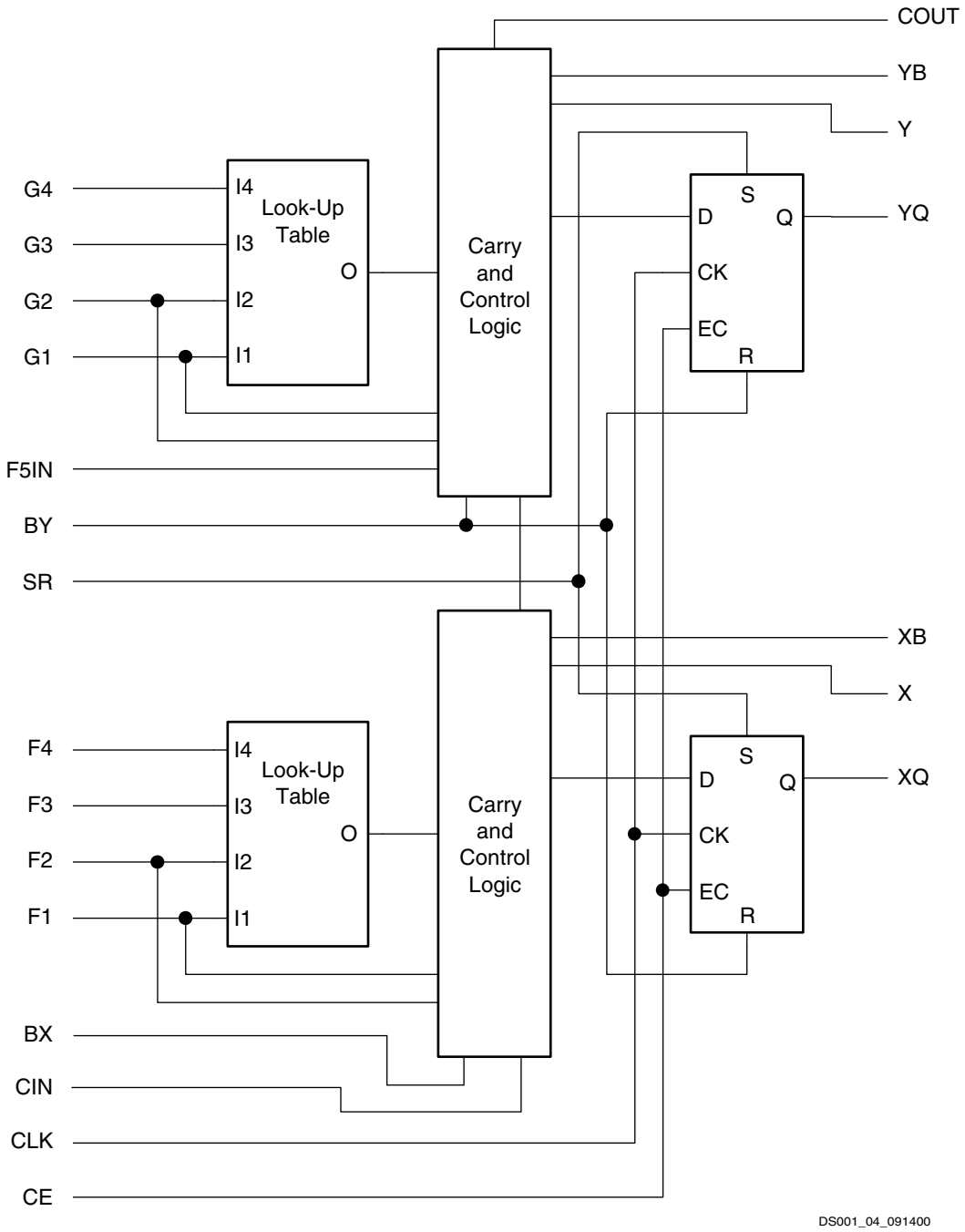

Figure 6: **Spartan-IIE CLB Slice** (two identical slices in each CLB)

Additional Logic

The F5 multiplexer in each slice combines the function generator outputs (Figure 7). This combination provides either a function generator that can implement any 5-input function, a 4:1 multiplexer, or selected functions of up to nine inputs.

Similarly, the F6 multiplexer combines the outputs of all four function generators in the CLB by selecting one of the two F5-multiplexer outputs. This permits the implementation of any 6-input function, an 8:1 multiplexer, or selected functions of up to 19 inputs.

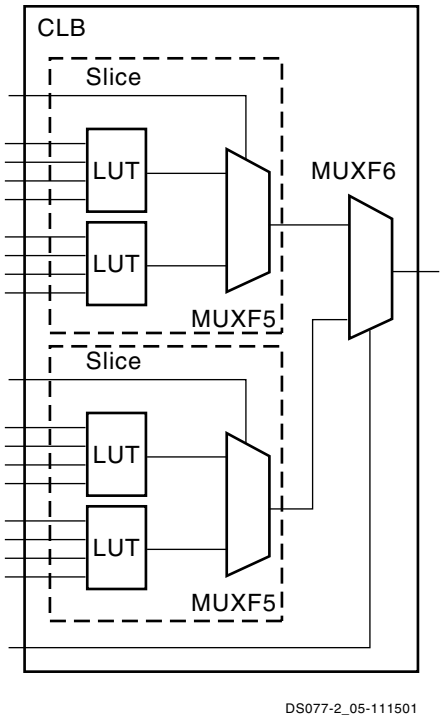

Figure 7: **F5 and F6 Multiplexers**

Each CLB has four direct feedthrough paths, one per LC. These paths provide extra data input lines or additional local routing that does not consume logic resources.

Arithmetic Logic

Dedicated carry logic provides capability for high-speed arithmetic functions. The Spartan-IIE FPGA CLB supports two separate carry chains, one per slice. The height of the carry chains is two bits per CLB.

The arithmetic logic includes an XOR gate that allows a 1-bit full adder to be implemented within an LC. In addition, a dedicated AND gate improves the efficiency of multiplier implementations.

The dedicated carry path can also be used to cascade function generators for implementing wide logic functions.

BUFTs

Each Spartan-IIE FPGA CLB contains two 3-state drivers (BUFTs) that can drive on-chip busses. The IOBs on the left and right sides can also drive the on-chip busses. See Dedicated Routing, page 17. Each Spartan-IIE FPGA BUFT has an independent 3-state control pin and an independent input pin. The 3-state control pin is an active-Low enable (T). When all BUFTs on a net are disabled, the net is High. There is no need to instantiate a pull-up unless desired for simulation purposes. Simultaneously driving BUFTs onto the same net will not cause contention. If driven both High and Low, the net will be Low.

Block RAM

Spartan-IIE FPGAs incorporate several large block RAM memories. These complement the distributed RAM Look-Up Tables (LUTs) that provide shallow memory structures implemented in CLBs.

Block RAM memory blocks are organized in columns. Most Spartan-IIE devices contain two such columns, one along each vertical edge. The XC2S400E has four block RAM columns and the XC2S600E has six block RAM columns. These columns extend the full height of the chip. Each memory block is four CLBs high, and consequently, a Spartan-IIE device 16 CLBs high will contain four memory blocks per column, and a total of eight blocks.

Table 6: **Spartan-IIE Block RAM Amounts**

Spartan-IIE Device	# of Blocks	Total Block RAM Bits
XC2S50E	8	32K
XC2S100E	10	40K
XC2S150E	12	48K
XC2S200E	14	56K
XC2S300E	16	64K
XC2S400E	40	160K
XC2S600E	72	288K

Each block RAM cell, as illustrated in Figure 8, is a fully synchronous dual-ported 4096-bit RAM with independent control signals for each port. The data widths of the two ports can be configured independently, providing built-in bus-width conversion.

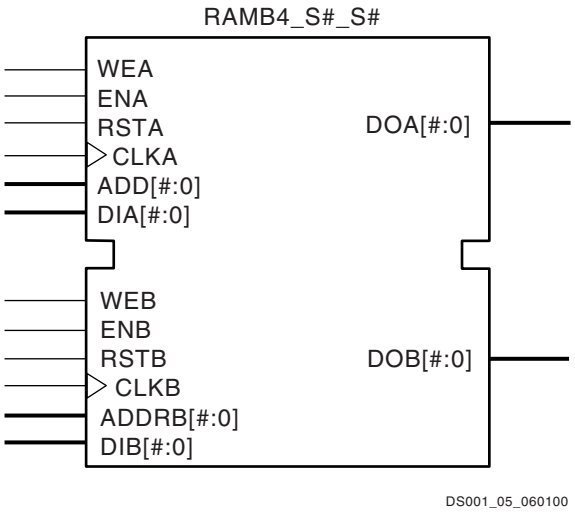

Figure 8: **Dual-Port Block RAM**

Table 7 shows the depth and width aspect ratios for the block RAM.

Table 7: **Block RAM Port Aspect Ratios**

Width	Depth	ADDR Bus	Data Bus
1	4096	ADDR<11:0>	DATA<0>
2	2048	ADDR<10:0>	DATA<1:0>
4	1024	ADDR<9:0>	DATA<3:0>
8	512	ADDR<8:0>	DATA<7:0>
16	256	ADDR<7:0>	DATA<15:0>

The Spartan-IIE FPGA block RAM also includes dedicated routing to provide an efficient interface with both CLBs and other block RAMs. See Xilinx Application Note XAPP173 for more information on block RAM.

Programmable Routing

It is the longest delay path that limits the speed of any design. Consequently, the Spartan-IIE FPGA routing architecture and its place-and-route software were defined jointly to minimize long-path delays and yield the best system performance.

The joint optimization also reduces design compilation times because the architecture is software-friendly. Design cycles are correspondingly reduced due to shorter design iteration times.

The software automatically uses the best available routing based on user timing requirements. The details are provided here for reference.

Local Routing

The local routing resources, as shown in Figure 9, provide the following three types of connections:

- Interconnections among the LUTs, flip-flops, and General Routing Matrix (GRM), described below.
- Internal CLB feedback paths that provide high-speed connections to LUTs within the same CLB, chaining them together with minimal routing delay
- Direct paths that provide high-speed connections between horizontally adjacent CLBs, eliminating the delay of the GRM

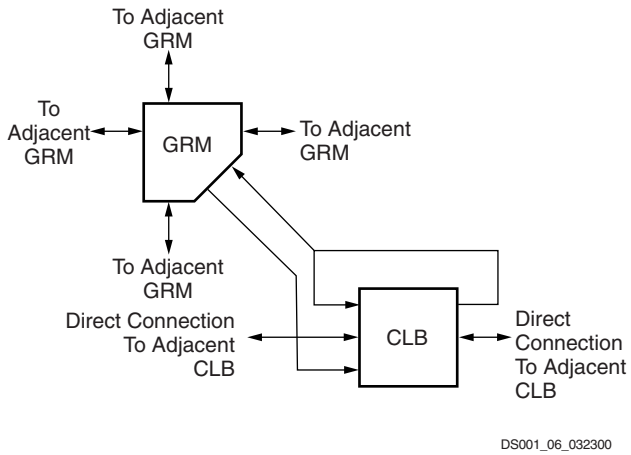

Figure 9: **Spartan-IIE Local Routing**

General Purpose Routing

Most Spartan-IIE FPGA signals are routed on the general purpose routing, and consequently, the majority of interconnect resources are associated with this level of the routing hierarchy. The general routing resources are located in horizontal and vertical routing channels associated with the rows and columns of CLBs. The general-purpose routing resources are listed below.

- Adjacent to each CLB is a General Routing Matrix (GRM). The GRM is the switch matrix through which horizontal and vertical routing resources connect, and is also the means by which the CLB gains access to the general purpose routing.
- 24 single-length lines route GRM signals to adjacent GRMs in each of the four directions.
- 96 buffered Hex lines route GRM signals to other GRMs six blocks away in each one of the four directions. Organized in a staggered pattern, Hex lines may be driven only at their endpoints. Hex-line signals can be accessed either at the endpoints or at the midpoint (three blocks from the source). One third of the Hex lines are bidirectional, while the remaining ones are unidirectional.
- 12 Longlines are buffered, bidirectional wires that distribute signals across the device quickly and efficiently. Vertical Longlines span the full height of the device, and horizontal ones span the full width of the device.

I/O Routing

Spartan-IIE devices have additional routing resources around their periphery that form an interface between the CLB array and the IOBs. This additional routing, called the VersaRing™ routing, facilitates pin-swapping and pin-locking, such that logic redesigns can adapt to existing PCB layouts. Time-to-market is reduced, since PCBs and other system components can be manufactured while the logic design is still in progress.

Dedicated Routing

Some classes of signal require dedicated routing resources to maximize performance. In the Spartan-IIE FPGA architecture, dedicated routing resources are provided for two classes of signal.

- Horizontal routing resources are provided for on-chip 3-state busses. Four partitionable bus lines are provided per CLB row, permitting multiple busses within a row, as shown in Figure 10.
- Two dedicated nets per CLB propagate carry signals vertically to the adjacent CLB.

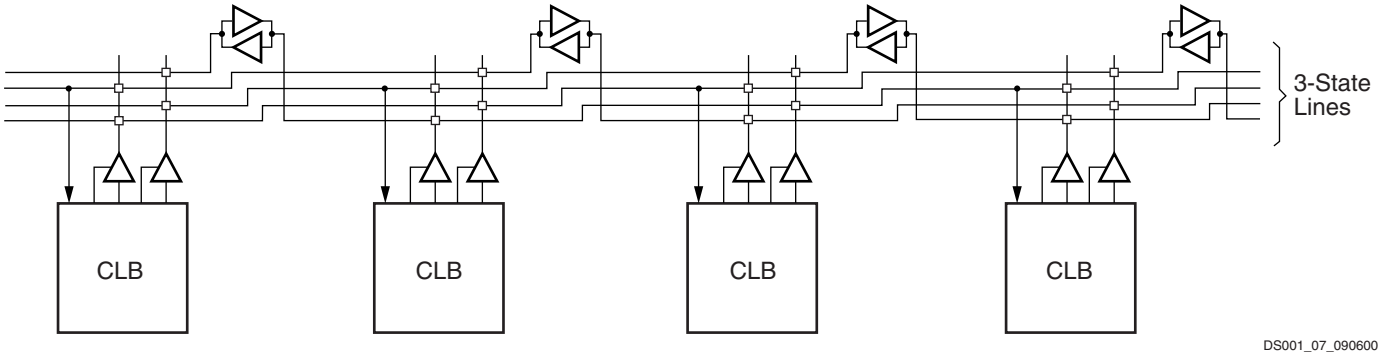

Figure 10: **BUFT Connections to Dedicated Horizontal Bus Lines**

Global Routing

Global Routing resources distribute clocks and other signals with very high fanout throughout the device. Spartan-IIE devices include two tiers of global routing resources referred to as primary and secondary global routing resources.

- The primary global routing resources are four dedicated global nets with dedicated input pins that are designed to distribute high-fanout clock signals with minimal skew. Each global clock net can drive all CLB, IOB, and block RAM clock pins. The primary global nets may only be driven by global buffers. There are four global buffers, one for each global net.
- The secondary global routing resources consist of 24 backbone lines, 12 across the top of the chip and 12 across the bottom. From these lines, up to 12 unique signals per column can be distributed via the 12 longlines in the column. These secondary resources are more flexible than the primary resources since they are not restricted to routing only to clock pins.

Clock Distribution

The Spartan-IIE family provides high-speed, low-skew clock distribution through the primary global routing resources described above. A typical clock distribution net is shown in Figure 11.

Four global buffers are provided, two at the top center of the device and two at the bottom center. These drive the four primary global nets that in turn drive any clock pin.

Four dedicated clock pads are provided, one adjacent to each of the global buffers. The input to the global buffer is selected either from these pads or from signals in the general purpose routing.

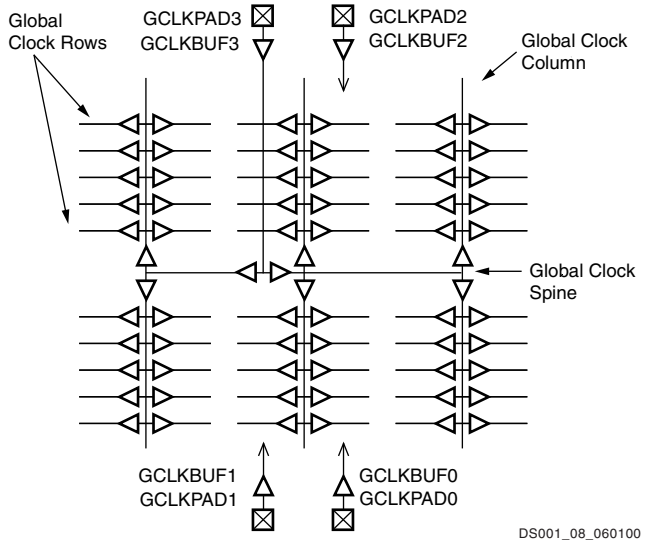

Figure 11: **Global Clock Distribution Network**

Delay-Locked Loop (DLL)

Associated with each global clock input buffer is a fully digital Delay-Locked Loop (DLL) that can eliminate skew between the clock input pad and internal clock-input pins throughout the device. Each DLL can drive two global clock networks. The DLL monitors the input clock and the distributed clock, and automatically adjusts a clock delay element (Figure 12). Additional delay is introduced such that clock edges reach internal flip-flops exactly one clock period after they arrive at the input. This closed-loop system effectively eliminates clock-distribution delay by ensuring that clock

edges arrive at internal flip-flops in synchronism with clock edges arriving at the input.

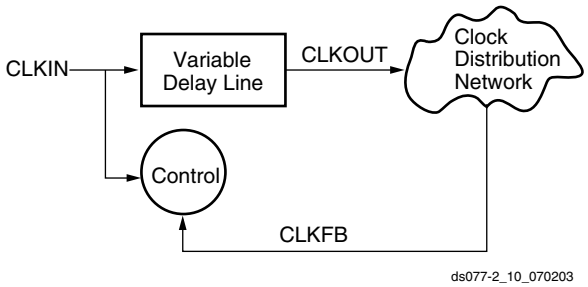

Figure 12: **Delay-Locked Loop Block Diagram**

In addition to eliminating clock-distribution delay, the DLL provides advanced control of multiple clock domains. The DLL provides four quadrature phases of the source clock, can double the clock, or divide the clock by 1.5, 2, 2.5, 3, 4, 5, 8, or 16. The phase-shifted output have optional duty-cycle correction (Figure 13).

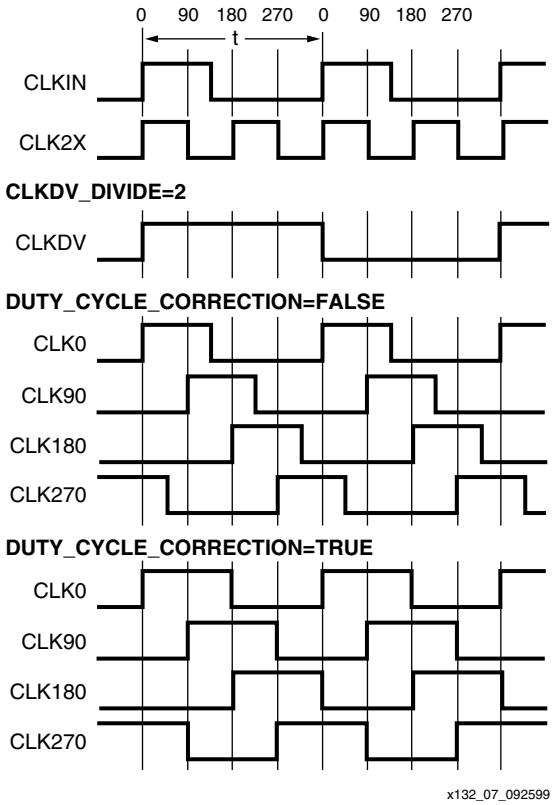

Figure 13: **DLL Output Characteristics**

The DLL also operates as a clock mirror. By driving the output from a DLL off-chip and then back on again, the DLL can be used to deskew a board level clock among multiple Spartan-IIE devices.

In order to guarantee that the system clock is operating correctly prior to the FPGA starting up after configuration, the DLL can delay the completion of the configuration process until after it has achieved lock. If the DLL uses external feedback, apply a reset after startup to ensure consistent locking to the external signal. See Xilinx Application Note XAPP174 for more information on DLLs.

Boundary Scan

Spartan-IIE devices support all the mandatory boundary-scan instructions specified in the IEEE standard 1149.1. A Test Access Port (TAP) and registers are provided that implement the EXTEST, INTEST, SAMPLE/PRELOAD, BYPASS, IDCODE, and HIGHZ instructions. The TAP also supports two USERCODE instructions, internal scan chains, and configuration/readback of the device.

The TAP uses dedicated package pins that always operate using LVTTL. For TDO to operate using LVTTL, the V_{CCO} for Bank 2 must be 3.3V. Otherwise, TDO switches rail-to-rail between ground and V_{CCO}. The boundary-scan input pins (TDI, TMS, TCK) do not have a V_{CCO} requirement and operate with either 2.5V or 3.3V input signaling levels. TDI, TMS, and TCK hava a default internal weak pull-up resistor, and TDO has no default resistor. Bitstream options allow setting any of the four TAP pins to have an internal pull-up, pull-down, or neither.

Boundary-scan operation is independent of individual IOB configurations, and unaffected by package type. All IOBs, including unbonded ones, are treated as independent 3-state bidirectional pins in a single scan chain. Retention of the bidirectional test capability after configuration facilitates the testing of external interconnections.

Table 8 lists the boundary-scan instructions supported in Spartan-IIE FPGAs. Internal signals can be captured during EXTEST by connecting them to unbonded or unused IOBs. They may also be connected to the unused outputs of IOBs defined as unidirectional input pins.

Table 8: **Boundary-Scan Instructions**

Boundary-Scan Command	Binary Code[4:0]	Description
EXTEST	00000	Enables boundary-scan EXTEST operation
SAMPLE/ PRELOAD	00001	Enables boundary-scan SAMPLE/PRELOAD operation
USER1	00010	Access user-defined register 1
USER2	00011	Access user-defined register 2
CFG_OUT	00100	Access the configuration bus for Readback
CFG_IN	00101	Access the configuration bus for Configuration

Table 8: **Boundary-Scan Instructions *(Continued)***

Boundary-Scan Command	Binary Code[4:0]	Description
INTEST	00111	Enables boundary-scan INTEST operation
USERCODE	01000	Enables shifting out USER code
IDCODE	01001	Enables shifting out of ID Code
HIGHZ	01010	Disables output pins while enabling the Bypass Register
JSTART	01100	Clock the start-up sequence when StartupClk is TCK
BYPASS	11111	Enables BYPASS
RESERVED	All other codes	Xilinx reserved instructions

The public boundary-scan instructions are available prior to configuration, except for USER1 and USER2. After configuration, the public instructions remain available together with any USERCODE instructions installed during the configuration. While the SAMPLE/PRELOAD and BYPASS instructions are available during configuration, it is recommended that boundary-scan operations not be performed during this transitional period.

In addition to the test instructions outlined above, the boundary-scan circuitry can be used to configure the FPGA, and also to read back the configuration data.

To facilitate internal scan chains, the User Register provides three outputs (Reset, Update, and Shift) that represent the corresponding states in the boundary-scan internal state machine.

Figure 14 is a diagram of the Spartan-IIE family boundary scan logic. It includes three bits of Data Register per IOB, the IEEE 1149.1 Test Access Port controller, and the Instruction Register with decodes.

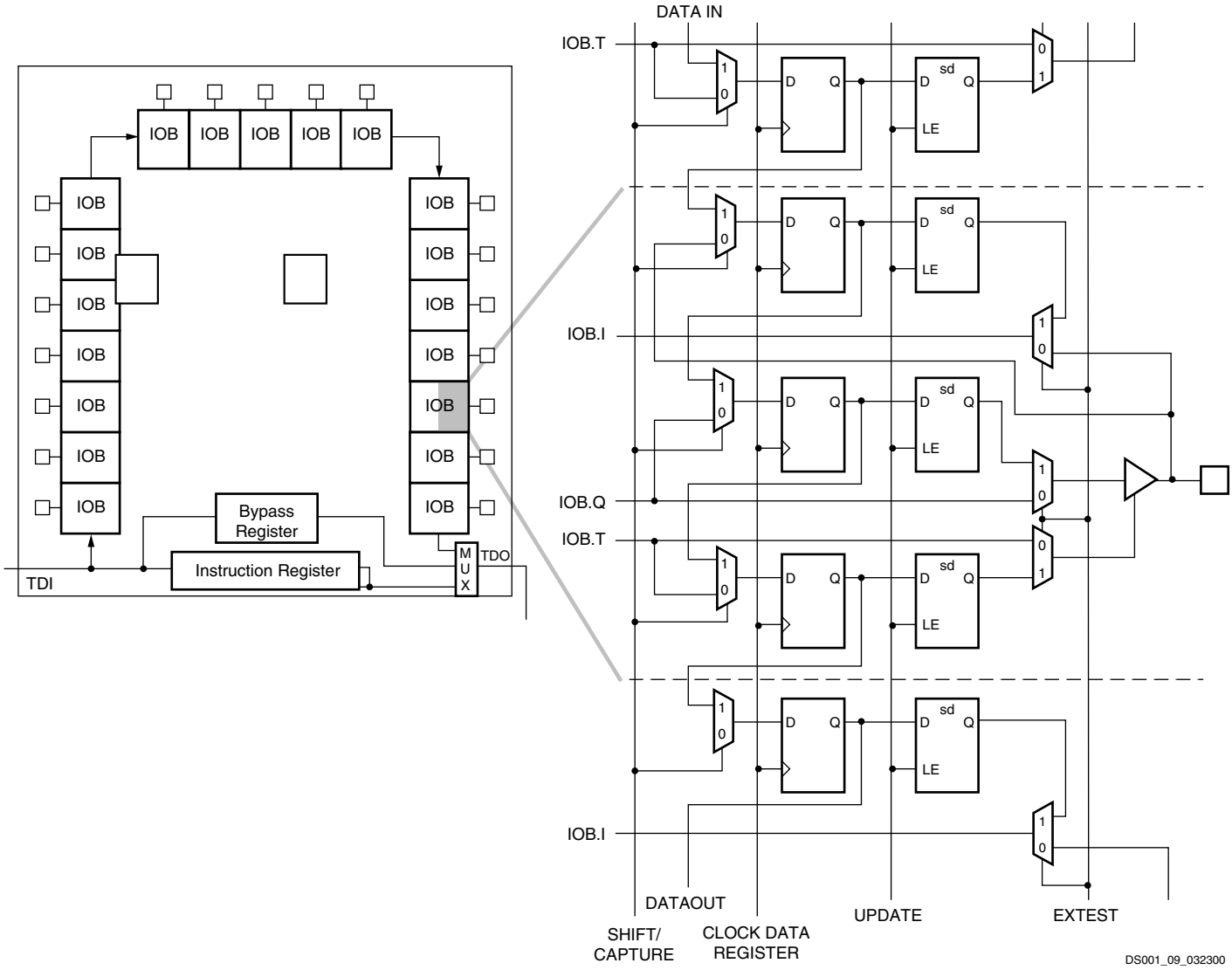

Figure 14: **Spartan-IIE Family Boundary Scan Logic**

Bit Sequence

The bit sequence within each IOB is: In, Out, 3-State. The input-only pins contribute only the In bit to the boundary scan I/O data register, while the output-only pins contributes all three bits.

From a cavity-up view of the chip (as shown in the FPGA Editor), starting in the upper right chip corner, the boundary scan data-register bits are ordered as shown in Figure 15.

BSDL (Boundary Scan Description Language) files for Spartan-IIE family devices are available on the Xilinx web site at: http://www.xilinx.com/support/download/sp2ebsdl.htm.

Spartan-IIE FPGA boundary scan IDCODE values are shown in Table 9.

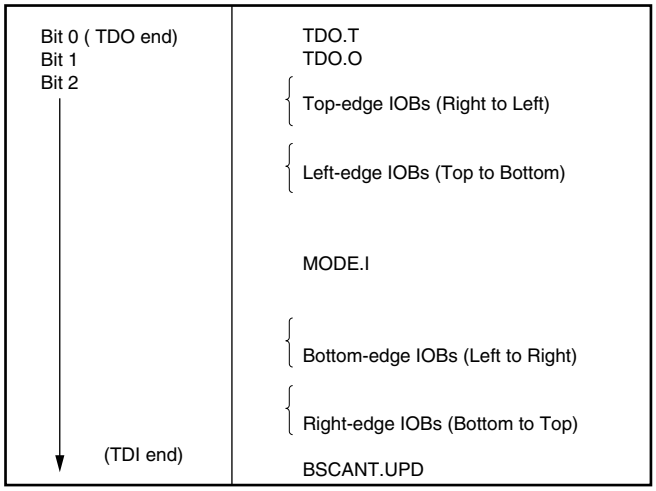

Figure 15: **Boundary Scan Bit Sequence**

Table 9: **Spartan-IIE IDCODE Values**

Device	IDCODE				
	Version	Family	Array Size	Manufacturer	Required
XC2S50E	XXXX	0000 101	0 0001 0000	0000 1001 001	1
XC2S100E	XXXX	0000 101	0 0001 0100	0000 1001 001	1
XC2S150E	XXXX	0000 101	0 0001 1000	0000 1001 001	1
XC2S200E	XXXX	0000 101	0 0001 1100	0000 1001 001	1
XC2S300E	XXXX	0000 101	0 0010 0000	0000 1001 001	1
XC2S400E	XXXX	0000 101	0 0010 1000	0000 1001 001	1
XC2S600E	XXXX	0000 101	0 0011 0000	0000 1001 001	1

Development System

Spartan-IIE FPGAs are supported by the Xilinx ISE® CAE tools. The basic methodology for Spartan-IIE FPGA design consists of three interrelated steps: design entry, implementation, and verification. Industry-standard tools are used for design entry and simulation, while Xilinx provides proprietary architecture-specific tools for implementation.

The Xilinx development system is integrated under the Xilinx Project Navigator software, providing designers with a common user interface regardless of their choice of entry and verification tools. The software simplifies the selection of implementation options with pull-down menus and on-line help.

Several advanced software features facilitate Spartan-IIE FPGA design. CORE Generator™ tool functions, for example, include macros with relative location constraints to guide their placement. They help ensure optimal implementation of common functions.

For HDL design entry, the Xilinx FPGA development system provides interfaces to several synthesis design environments.

A standard interface-file specification, Electronic Design Interchange Format (EDIF), simplifies file transfers into and out of the development system.

Spartan-IIE FPGAs are supported by a unified library of standard functions. This library contains over 400 primitives and macros, ranging from 2-input AND gates to 16-bit accumulators, and includes arithmetic functions, comparators, counters, data registers, decoders, encoders, I/O functions, latches, Boolean functions, multiplexers, shift registers, and barrel shifters.

The design environment supports hierarchical design entry, with high-level designs that comprise major functional blocks, while lower-level designs define the logic in these blocks. These hierarchical design elements are automatically combined by the implementation tools. Different design entry tools can be combined within a hierarchical

design, thus allowing the most convenient entry method to be used for each portion of the design.

Design Implementation

The place-and-route tools automatically provide the implementation flow described in this section. The partitioner takes the EDIF netlist for the design and maps the logic into the architectural resources of the FPGA (CLBs and IOBs, for example). The placer then determines the best locations for these blocks based on their interconnections and the desired performance. Finally, the router interconnects the blocks.

The algorithms support fully automatic implementation of most designs. For demanding applications, however, the user can exercise various degrees of control over the process. User partitioning, placement, and routing information is optionally specified during the design-entry process. The implementation of highly structured designs can benefit greatly from basic floorplanning.

The implementation software incorporates timing-driven placement and routing. Designers specify timing requirements along entire paths during design entry. The timing path analysis routines then recognize these user-specified requirements and accommodate them.

Timing requirements are entered in a form directly relating to the system requirements, such as the targeted clock frequency, or the maximum allowable delay between two registers. In this way, the overall performance of the system along entire signal paths is automatically tailored to user-generated specifications. Specific timing information for individual nets is unnecessary.

Design Verification

In addition to conventional software simulation, FPGA users can use in-circuit debugging techniques. Because Xilinx devices are infinitely reprogrammable, designs can be verified in real time without the need for extensive sets of software simulation vectors.

The development system supports both software simulation and in-circuit debugging techniques. For simulation, the system extracts the post-layout timing information from the design database, and back-annotates this information into the netlist for use by the simulator. Alternatively, the user can verify timing-critical portions of the design using the static timing analyzer.

For in-circuit debugging, Xilinx offers a download cable, which connects the FPGA in the target system to a PC or workstation. After downloading the design into the FPGA, the designer can read back the contents of the flip-flops, and so observe the internal logic state. Simple modifications can be downloaded into the system in a matter of minutes.

Configuration

Configuration is the process by which the bitstream of a design, as generated by the Xilinx development software, is loaded into the internal configuration memory of the FPGA. Spartan-IIE devices support both serial configuration, using the master/slave serial and JTAG modes, as well as byte-wide configuration employing the Slave Parallel mode.

Configuration File

Spartan-IIE devices are configured by sequentially loading frames of data that have been concatenated into a configuration file. Table 10 shows how much nonvolatile storage space is needed for Spartan-IIE devices.

It is important to note that, while a PROM is commonly used to store configuration data before loading them into the FPGA, it is by no means required. Any of a number of different kinds of under populated nonvolatile storage already available either on or off the board (for example, hard drives, FLASH cards, and so on) can be used.

Table 10: **Spartan-IIE Configuration File Size**

Device	Configuration File Size (Bits)
XC2S50E	630,048
XC2S100E	863,840
XC2S150E	1,134,496
XC2S200E	1,442,016
XC2S300E	1,875,648
XC2S400E	2,693,440
XC2S600E	3,961,632

Modes

Spartan-IIE devices support the following four configuration modes:

- Slave Serial mode
- Master Serial mode
- Slave Parallel mode
- Boundary-scan mode

The Configuration mode pins (M2, M1, M0) select among these configuration modes with the option in each case of having the IOB pins either pulled up or left floating prior to the end of configuration. The selection codes are listed in Table 11.

Configuration through the boundary-scan port is always available, independent of the mode selection. Selecting the boundary-scan mode simply turns off the other modes. The three mode pins have internal pull-up resistors, and default to a logic High if left unconnected.

Table 11: **Configuration Modes**

Configuration Mode	Preconfiguration Pull-ups	M0	M1	M2	CCLK Direction	Data Width	Serial D_{OUT}
Master Serial mode	No	0	0	0	Out	1	Yes
	Yes	0	0	1			
Slave Parallel mode (SelectMAP)	Yes	0	1	0	In	8	No
	No	0	1	1			
Boundary-Scan mode	Yes	1	0	0	N/A	1	No
	No	1	0	1			
Slave Serial mode	Yes	1	1	0	In	1	Yes
	No	1	1	1			

Notes:

1. During power-on and throughout configuration, the I/O drivers will be in a high-impedance state. After configuration, all unused I/Os (those not assigned signals) will remain in a high-impedance state. Pins used as outputs may pulse High at the end of configuration (see Answer 10504).
2. If the Mode pins are set for preconfiguration pull-ups, those resistors go into effect once the rising edge of INIT samples the Mode pins. They will stay in effect until GTS is released during startup, after which the UnusedPin bitstream generator option will determine whether the unused I/Os have a pull-up, pull-down, or no resistor.

Signals

There are two kinds of pins that are used to configure Spartan-IIE devices: Dedicated pins perform only specific configuration-related functions; the other pins can serve as general purpose I/Os once user operation has begun.

The dedicated pins comprise the mode pins (M2, M1, M0), the configuration clock pin (CCLK), the $\overline{\text{PROGRAM}}$ pin, the DONE pin and the boundary-scan pins (TDI, TDO, TMS, TCK). Depending on the selected configuration mode, CCLK may be an output generated by the FPGA, or may be generated externally, and provided to the FPGA as an input.

Note that some configuration pins can act as outputs. For correct operation, these pins require a V_{CCO} of 3.3V to drive an LVTTL signal or 2.5V to drive an LVCMOS signal. All the relevant pins fall in banks 2 or 3. The $\overline{\text{CS}}$ and $\overline{\text{WRITE}}$ pins for Slave Parallel mode are located in bank 1.

For a more detailed description than that given below, see ***Module 1*** and XAPP176*, Configuration and Readback of the Spartan-II and Spartan-IIE FPGA Families.*

The Process

The sequence of steps necessary to configure Spartan-IIE devices are shown in Figure 16. The overall flow can be divided into three different phases.

- Initiating configuration
- Configuration memory clear
- Loading data frames
- Start-up

The memory clearing and start-up phases are the same for all configuration modes; however, the steps for the loading of data frames are different. Thus, the details for data frame loading are described separately in the sections devoted to each mode.

Initiating Configuration

There are two different ways to initiate the configuration process: applying power to the device or asserting the $\overline{\text{PROGRAM}}$ input.

Configuration on power-up occurs automatically unless it is delayed by the user, as described in a separate section below. The waveform for configuration on power-up is shown in Configuration Switching Characteristics, page 48. Before configuration can begin, V_{CCO} Bank 2 must be greater than 1.0V. Furthermore, all V_{CCINT} power pins must be connected to a 1.8V supply. For more information on delaying configuration, see Clearing Configuration Memory, page 23.

Once in user operation, the device can be re-configured simply by pulling the $\overline{\text{PROGRAM}}$ pin Low. The device acknowledges the beginning of the configuration process by driving DONE Low, then enters the memory-clearing phase.

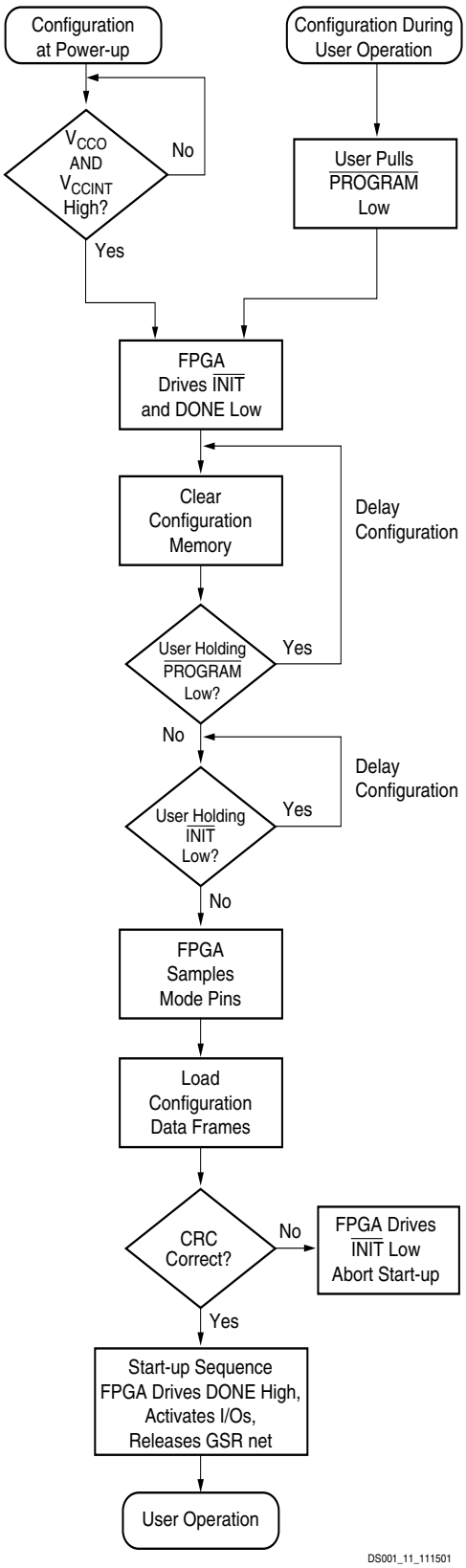

Figure 16: **Configuration Flow Diagram**

Clearing Configuration Memory

The device indicates that clearing the configuration memory is in progress by driving $\overline{\text{INIT}}$ Low.

Delaying Configuration

At this time, the user can delay configuration by holding either $\overline{\text{PROGRAM}}$ or $\overline{\text{INIT}}$ Low, which causes the device to remain in the memory clearing phase. Note that the bidirectional $\overline{\text{INIT}}$ line is driving a Low logic level during memory clearing. Thus, to avoid contention, use an open-drain driver to keep $\overline{\text{INIT}}$ Low.

With no delay in force, the device indicates that the memory is completely clear by driving $\overline{\text{INIT}}$ High. The FPGA samples its mode pins on this Low-to-High transition.

Loading Configuration Data

Once $\overline{\text{INIT}}$ is High, the user can begin loading configuration data frames into the device. The details of loading the configuration data are discussed in the sections treating the configuration modes individually. The sequence of operations necessary to load configuration data using the serial modes is shown in Figure 18. Loading data using the Slave Parallel mode is shown in Figure 21, page 28.

CRC Error Checking

After the loading of configuration data, a CRC value embedded in the configuration file is checked against a CRC value calculated within the FPGA. If the CRC values do not match, the FPGA drives $\overline{\text{INIT}}$ Low to indicate that an error has occurred and configuration is aborted. Note that attempting to load an incorrect bitstream causes configuration to fail and can damage the device.

To reconfigure the device, the $\overline{\text{PROGRAM}}$ pin should be asserted to reset the configuration logic. Recycling power also resets the FPGA for configuration. See Clearing Configuration Memory.

Start-up

The start-up sequence oversees the transition of the FPGA from the configuration state to full user operation. A match of CRC values, indicating a successful loading of the configuration data, initiates the sequence.

During start-up, the device performs four operations:

1. The assertion of DONE. The failure of DONE to go High may indicate the unsuccessful loading of configuration data.
2. The release of the Global Three State (GTS). This activates all the I/Os to which signals are assigned. The remaining I/Os stay in a high-impedance state with internal weak pull-up resistors present.
3. The release of the Global Set Reset (GSR). This allows all flip-flops to change state.
4. The assertion of Global Write Enable (GWE). This allows all RAMs and flip-flops to change state.

By default, these operations are synchronized to CCLK. The entire start-up sequence lasts eight cycles, called C0-C7, after which the loaded design is fully functional. The four operations can be selected to switch on any CCLK cycle C1-C6 through settings in the Xilinx Development Software. The default timing for start-up is shown in the top half of Figure 17; heavy lines show default settings.

The default Start-up sequence is that one CCLK cycle after DONE goes High, the global 3-state signal (GTS) is released. This permits device outputs to turn on as necessary.

One CCLK cycle later, the Global Set/Reset (GSR) and Global Write Enable (GWE) signals are released. This permits the internal storage elements to begin changing state in response to the logic and the user clock.

The bottom half of Figure 17 shows another commonly used version of the start-up timing known as Sync-to-DONE. This version makes the GTS, GSR, and GWE events conditional upon the DONE pin going High. This timing is important for a daisy chain of multiple FPGAs in serial mode, since it ensures that all FPGAs go through start-up together, after all their DONE pins have gone High.

Sync-to-DONE timing is selected by setting the GTS, GSR, and GWE cycles to a value of DONE in the configuration options. This causes these signals to transition one clock cycle after DONE externally transitions High.

The sequence can also be paused at any stage until lock has been achieved on any or all DLLs.

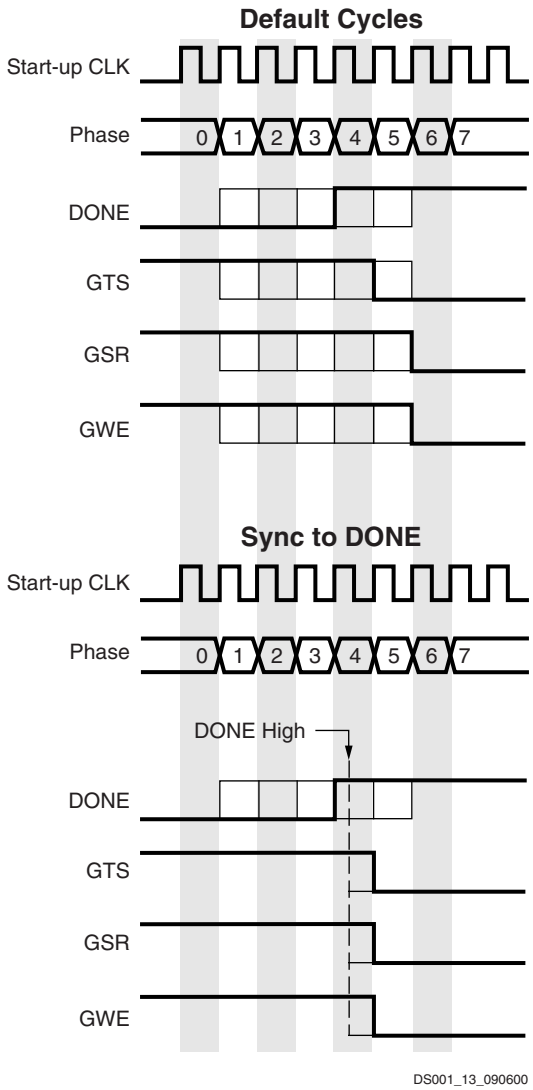

Figure 17: **Start-Up Waveforms**

Serial Modes

There are two serial configuration modes. In Master Serial mode, the FPGA controls the configuration process by driving CCLK as an output. In Slave Serial mode, the FPGA passively receives CCLK as an input from an external agent (e.g., a microprocessor, CPLD, or second FPGA in master mode) that is controlling the configuration process. In both modes, the FPGA is configured by loading one bit per CCLK cycle. The MSB of each configuration data byte is always written to the DIN pin first.

See Figure 18 for the sequence for loading data into the Spartan-IIE FPGA serially. This is an expansion of the "Load Configuration Data Frames" block in Figure 16, page 23. Note that $\overline{CS}$ and $\overline{WRITE}$ are not normally used during serial configuration. To ensure successful loading of the FPGA, do not toggle $\overline{WRITE}$ with $\overline{CS}$ Low during serial configuration.

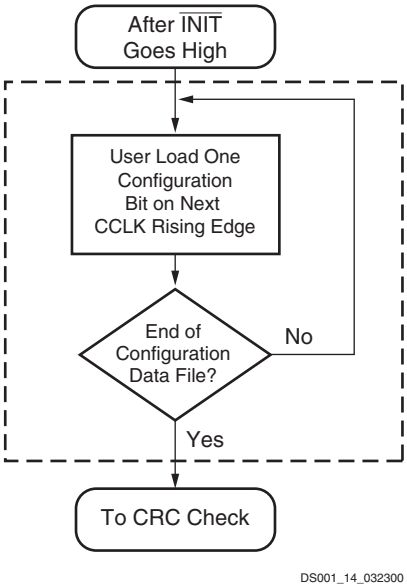

Figure 18: **Loading Serial Mode Configuration Data**

Slave Serial Mode

In Slave Serial mode, the FPGA's CCLK pin is driven by an external source, allowing the FPGA to be configured from other logic devices such as microprocessors or in a daisy-chain configuration. Figure 19 shows connections for a Master Serial FPGA configuring a Slave Serial FPGA from a PROM. A Spartan-IIE device in slave serial mode should be connected as shown for the third device from the left. Slave Serial mode is selected by a <11x> on the mode pins (M0, M1, M2). The weak pull-ups on the mode pins make slave serial the default mode if the pins are left unconnected.

The serial bitstream must be setup at the DIN input pin a short time before each rising edge of an externally generated CCLK.

Timing for Slave Serial mode is shown in Figure 24, page 49.

Daisy Chain

Multiple FPGAs in Slave Serial mode can be daisy-chained for configuration from a single source. After an FPGA is configured, data for the next device is sent to the DOUT pin. Data on the DOUT pin changes on the rising edge of CCLK. Note that DOUT changes on the falling edge of CCLK for some Xilinx families but mixed daisy chains are allowed. Configuration must be delayed until $\overline{INIT}$ pins of all daisy-chained FPGAs are High. For more information, see Start-up, page 23.

The maximum amount of data that can be sent to the DOUT pin for a serial daisy chain is 2^{20}-1 (1,048,575) 32-bit words, or 33,554,400 bits, which is approximately 8 XC2S600E bitstreams. The configuration bitstream of downstream devices is limited to this size.

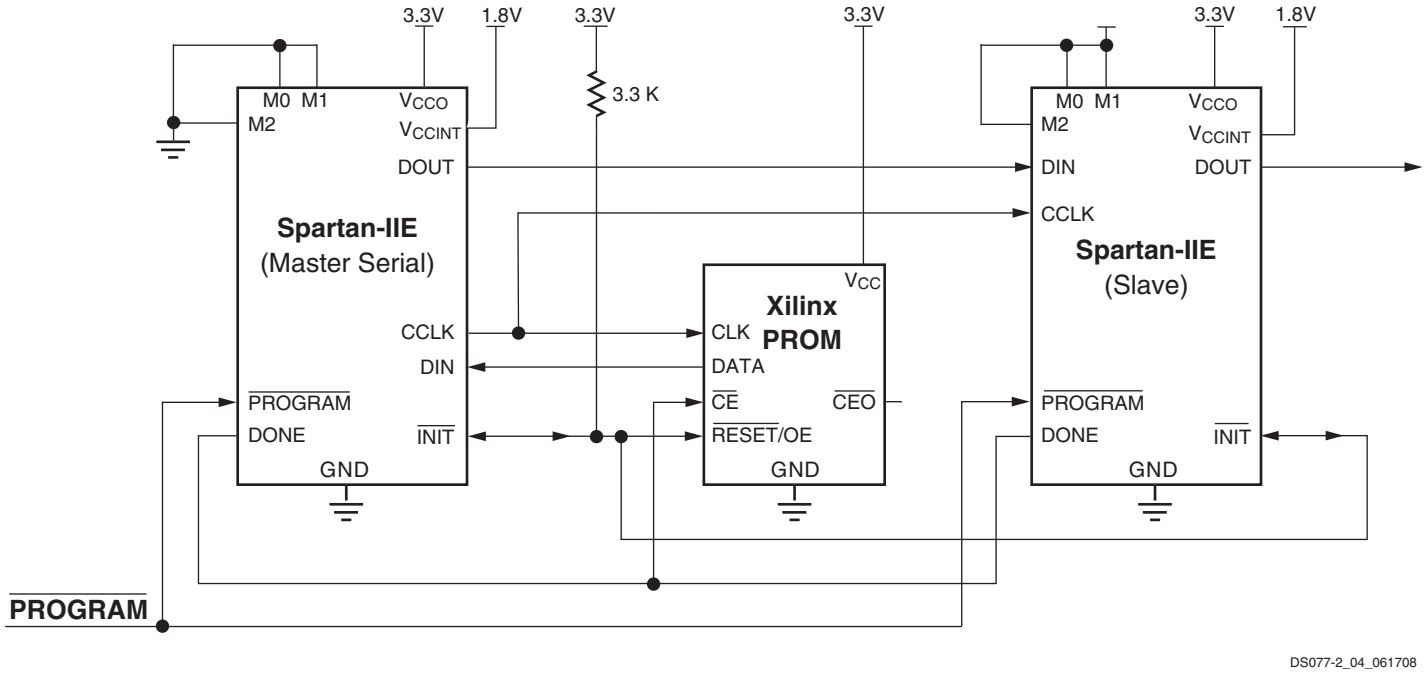

Notes:
1. If the DriveDone configuration option is not active for any of the FPGAs, pull up DONE with a 330Ω resistor.

Figure 19: **Master/Slave Serial Configuration Circuit Diagram**

Master Serial Mode

In Master Serial mode, the CCLK output of the FPGA drives a Xilinx PROM, which feeds a serial stream of configuration data to the FPGA's DIN input. Figure 19 shows a Master Serial FPGA configuring a Slave Serial FPGA from a PROM. A Spartan-IIE device in Master Serial mode should be connected as shown for the device on the left side. Master Serial mode is selected by a <00x> on the mode pins (M0, M1, M2). The PROM RESET pin is driven by $\overline{\text{INIT}}$, and the CE input is driven by DONE. For more information on serial PROMs, see the Xilinx Configuration PROM data sheets at:

www.xilinx.com/support/documentation/configuration_proms_data_sheets.htm

The interface is identical to the slave serial mode except that an oscillator internal to the FPGA is used to generate the configuration clock (CCLK). Any of a number of different frequencies ranging from 4 to 60 MHz can be set using the ConfigRate option in the Xilinx development software. When selecting a CCLK frequency, ensure that the serial PROM and any daisy-chained FPGAs are fast enough to support the clock rate. On power-up, while the first 60 bytes of the configuration data are being loaded, the CCLK frequency is always 2.5 MHz. This frequency is used until the ConfigRate bits, part of the configuration file, have been loaded into the FPGA, at which point the frequency changes to the selected ConfigRate. Unless a different frequency is specified in the design, the default ConfigRate is 4 MHz. The frequency of the CCLK signal created by the internal oscillator has a variance of +45%, –30% from the specified value.

The FPGA accepts one bit of configuration data on each rising CCLK edge. After the FPGA has been loaded, the data for the next device in a daisy-chain is presented on the DOUT pin after the rising CCLK edge. The timing for Master Serial mode is shown in Figure 25, page 49.

Slave Parallel Mode (SelectMAP)

The Slave Parallel mode, also known as SelectMAP, is the fastest configuration option. Byte-wide data is written into the FPGA on the D0-D7 pins. Note that D0 is the MSB of each byte for configuration. A BUSY flag is provided for controlling the flow of data at a clock frequency above 50 MHz.

Figure 20, page 27 shows the connections for two Spartan-IIE devices using the Slave Parallel mode. Slave Parallel mode is selected by a <011> on the mode pins (M0, M1, M2).

The agent controlling configuration is not shown. Typically, a processor, a microcontroller, or CPLD controls the Slave Parallel interface. The controlling agent provides byte-wide configuration data, CCLK, a Chip Select ($\overline{\text{CS}}$) signal and a Write signal ($\overline{\text{WRITE}}$). If BUSY is asserted (High) by the FPGA, the data must be held until BUSY goes Low.

After configuration, the pins of the Slave Parallel port (D0-D7) can be used as additional user I/O. Alternatively, the port may be retained to permit high-speed 8-bit readback. Then data can be read by deasserting $\overline{\text{WRITE}}$. If retention is selected, prohibit the D0-D7 pins from being used as user I/O. See Readback, page 28.

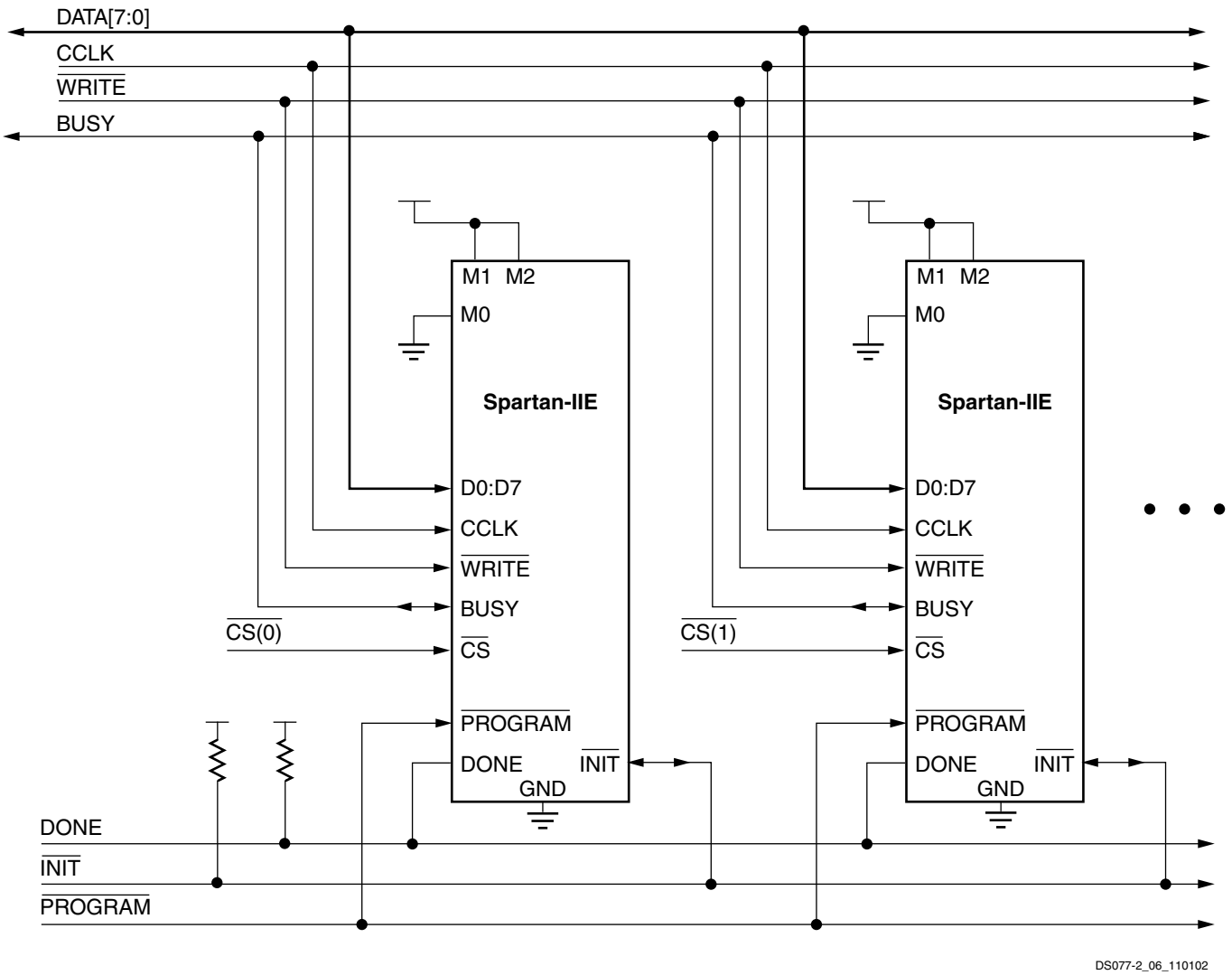

Figure 20: **Slave Parallel Configuration Circuit Diagram**

Multiple Spartan-IIE FPGAs can be configured using the Slave Parallel mode, and be made to start-up simultaneously. To configure multiple devices in this way, wire the individual CCLK, Data, $\overline{\text{WRITE}}$, and BUSY pins of all the devices in parallel. The individual devices are loaded separately by asserting the $\overline{\text{CS}}$ pin of each device in turn and writing the appropriate data. Sync-to-DONE start-up timing is used to ensure that the start-up sequence does not begin until all the FPGAs have been loaded. See Start-up, page 23.

Write

When using the Slave Parallel Mode, write operations send packets of byte-wide configuration data into the FPGA. Figure 21, page 28 shows a flowchart of the write sequence used to load data into the Spartan-IIE FPGA. This is an expansion of the "Load Configuration Data Frames" block in Figure 16, page 23.

The timing for Slave Parallel mode is shown in Figure 26, page 50.

For the present example, the user holds $\overline{\text{WRITE}}$ and $\overline{\text{CS}}$ Low throughout the sequence of write operations. Note that when $\overline{\text{CS}}$ is asserted on successive CCLKs, $\overline{\text{WRITE}}$ must remain either asserted or deasserted. Otherwise an abort will be initiated, as in the next section.

1. Drive data onto D0-D7. Note that to avoid contention, the data source should not be enabled while $\overline{\text{CS}}$ is Low and $\overline{\text{WRITE}}$ is High. Similarly, while $\overline{\text{WRITE}}$ is High, no more than one device's $\overline{\text{CS}}$ should be asserted.
2. On the rising edge of CCLK: If BUSY is Low, the data is accepted on this clock. If BUSY is High (from a previous write), the data is not accepted. Acceptance will instead occur on the first clock after BUSY goes Low, and the data must be held until this happens.
3. Repeat steps 1 and 2 until all the data has been sent.
4. Deassert $\overline{\text{CS}}$ and $\overline{\text{WRITE}}$.

If CCLK is slower than F_{CCNH}, the FPGA will never assert BUSY. In this case, the above handshake is unnecessary, and data can simply be entered into the FPGA every CCLK cycle.

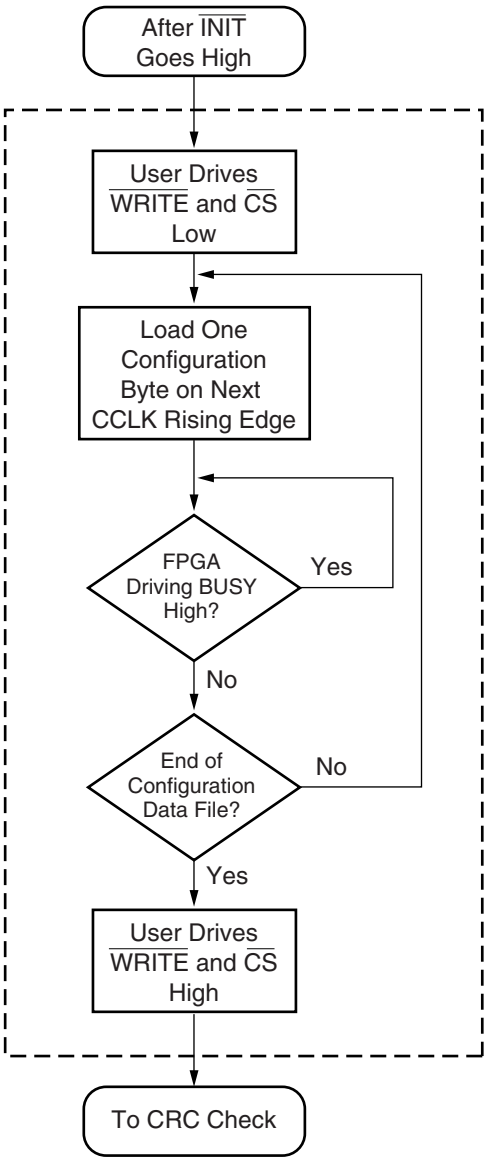

DS001_19_032300

Figure 21: **Loading Configuration Data for the Slave Parallel Mode**

A configuration packet does not have to be written in one continuous stretch, rather it can be split into many write sequences. Each sequence would involve assertion of $\overline{CS}$.

In applications where multiple clock cycles may be required to access the configuration data before each byte can be loaded into the Slave Parallel interface, a new byte of data may not be ready for each consecutive CCLK edge. In such a case the $\overline{CS}$ signal may be deasserted until the next byte is valid on D0-D7. While $\overline{CS}$ is High, the Slave Parallel interface does not expect any data and ignores all CCLK transitions. However, to avoid aborting configuration, $\overline{WRITE}$ must continue to be asserted while $\overline{CS}$ is asserted during CCLK transitions.

Abort

To abort configuration during a write sequence, deassert $\overline{WRITE}$ while holding $\overline{CS}$ Low. The abort operation is initiated at the rising edge of CCLK. The device will remain BUSY until the aborted operation is complete. After aborting configuration, data is assumed to be unaligned to word boundaries and the FPGA requires a new synchronization word prior to accepting any new packets.

Boundary-Scan Configuration Mode

In the boundary-scan mode, no nondedicated pins are required, configuration being done entirely through the IEEE 1149.1 Test Access Port (TAP).

Configuration through the TAP uses the special CFG_IN instruction. This instruction allows data input on TDI to be converted into data packets for the internal configuration bus.

The following steps are required to configure the FPGA through the boundary-scan port.

1. Load the CFG_IN instruction into the boundary-scan instruction register (IR)
2. Enter the Shift-DR (SDR) state
3. Shift a standard configuration bitstream into TDI
4. Return to Run-Test-Idle (RTI)
5. Load the JSTART instruction into IR
6. Enter the SDR state
7. Clock TCK (if selected) through the startup sequence (the length is programmable)
8. Return to RTI

Configuration and readback via the TAP is always available. The boundary-scan mode simply locks out the other modes. The boundary-scan mode is selected by a <10x> on the mode pins (M0, M1, M2). Note that the $\overline{PROGRAM}$ pin must be pulled High prior to reconfiguration. A Low on the $\overline{PROGRAM}$ pin resets the TAP controller and no boundary scan operations can be performed. See Xilinx Application Note XAPP188 for more information on boundary-scan configuration.

Readback

The configuration data stored in the Spartan-IIE FPGA configuration memory can be read back for verification. Along with the configuration data it is possible to read back the contents of all flip-flops/latches, LUT RAMs, and block RAMs. This capability is used for real-time debugging.

For more detailed information see Xilinx Application Note XAPP176, *Configuration and Readback of the Spartan-II and Spartan-IIE FPGA Families.*

Revision History

Version No.	Date	Description
1.0	11/15/01	Initial Xilinx release.
2.0	11/18/02	Added XC2S400E and XC2S600E. Removed Preliminary designation. Clarified details of I/O standards, boundary scan, and configuration.
2.1	07/09/03	Added hot swap description (see Hot Swap, Hot Insertion, Hot Socketing Support). Added Table 9 containing JTAG IDCODE values. Clarified configuration PROM support.
2.3	06/18/08	Added note that TDI, TMS, and TCK have a default pull-up resistor. Add note on maximum daisy-chain limit. Updated Figure 19 since Mode pins can be pulled up to either 2.5V or 3.3V. Updated all modules for continuous page, figure, and table numbering. Updated links. Synchronized all modules to v2.3.

Definition of Terms

In this document, some specifications may be designated as Advance or Preliminary. These designations are based on the more detailed timing information used by the development system and reported in the output files. These terms are defined as follows:

Advance: Initial estimates based on simulation and/or extrapolation from other speed grades, devices, or families. Values are subject to change. Use as estimates, not for production.

Preliminary: Based on characterization. Further changes are not expected.

Except for pin-to-pin input and output parameters, the AC parameter delay specifications included in this document are derived from measuring internal test patterns. All specifications are representative of worst-case supply voltage and junction temperature conditions. The parameters included are common to popular designs and typical applications. All specifications are subject to change without notice.

DC Specifications

Absolute Maximum Ratings(1)

Symbol	Description	Min	Max	Units
V_{CCINT}	Supply voltage relative to GND	–0.5	2.0	V
V_{CCO}	Supply voltage relative to GND	–0.5	4.0	V
V_{REF}	Input reference voltage	–0.5	4.0	V
V_{IN}	Input voltage relative to GND(2,3)	–0.5	4.0	V
V_{TS}	Voltage applied to 3-state output(3)	–0.5	4.0	V
T_{STG}	Storage temperature (ambient)	–65	+150	°C
T_J	Junction temperature	-	+125	°C

Notes:
1. Stresses beyond those listed under Absolute Maximum Ratings may cause permanent damage to the device. These are stress ratings only, and functional operation of the device at these or any other conditions beyond those listed under Operating Conditions is not implied. Exposure to Absolute Maximum Ratings conditions for extended periods of time may affect device reliability.
2. V_{IN} should not exceed V_{CCO} by more than 3.6V over extended periods of time (e.g., longer than a day).
3. Maximum DC overshoot must be limited to either V_{CCO} + 0.5V or 10 mA, and undershoot must be limited to –0.5V or 10 mA, whichever is easier to achieve. The Maximum AC conditions are as follows: The device pins may undershoot to –2.0V or overshoot to V_{CCO} + 2.0V, provided this over/undershoot lasts no more than 11 ns with a forcing current no greater than 100 mA.
4. For soldering guidelines, see the Packaging Information on the Xilinx® website.

© 2003-2007 Xilinx, Inc. All rights reserved. XILINX, the Xilinx logo, the Brand Window, and other designated brands included herein are trademarks of Xilinx, Inc. All other trademarks are the property of their respective owners.

Recommended Operating Conditions

Symbol	Description		Min	Max	Units
T_J	Junction temperature	Commercial	0	85	°C
		Industrial	–40	100	°C
V_{CCINT}	Supply voltage relative to GND(1)	Commercial	1.8 – 5%	1.8 + 5%	V
		Industrial	1.8 – 5%	1.8 + 5%	V
V_{CCO}	Supply voltage relative to GND(2)	Commercial	1.2	3.6	V
		Industrial	1.2	3.6	V
T_{IN}	Input signal transition time(3)		-	250	ns

Notes:
1. Functional operation is guaranteed down to a minimum V_{CCINT} of 1.62V (Nominal V_{CCINT} –10%). For every 50 mV reduction in V_{CCINT} below 1.71V (nominal V_{CCINT} –5%), all delay parameters increase by approximately 3%.
2. Minimum and maximum values for V_{CCO} vary according to the I/O standard selected.
3. Input and output measurement threshold is ~50% of V_{CCO}. See Delay Measurement Methodology, page 41 for specific details.

DC Characteristics Over Operating Conditions

Symbol	Description			Min	Typ	Max	Units
V_{DRINT}	Data retention V_{CCINT} voltage (below which configuration data may be lost)			1.5	-	-	V
V_{DRIO}	Data retention V_{CCO} voltage (below which configuration data may be lost)			1.2	-	-	V
I_{CCINTQ}	Quiescent V_{CCINT} supply current(1)	XC2S50E	Commercial	-	10	200	mA
			Industrial	-	10	200	mA
		XC2S100E	Commercial	-	10	200	mA
			Industrial	-	10	200	mA
		XC2S150E	Commercial	-	10	300	mA
			Industrial	-	10	300	mA
		XC2S200E	Commercial	-	10	300	mA
			Industrial	-	10	300	mA
		XC2S300E	Commercial	-	12	300	mA
			Industrial	-	12	300	mA
		XC2S400E	Commercial	-	15	300	mA
			Industrial	-	15	300	mA
		XC2S600E	Commercial	-	15	400	mA
			Industrial	-	15	400	mA
I_{CCOQ}	Quiescent V_{CCO} supply current(1)			-	-	2	mA
I_{REF}	V_{REF} current per V_{REF} pin			-	-	20	µA
I_L	Input or output leakage current per pin			–10	-	+10	µA
C_{IN}	Input capacitance (sample tested)	TQ, PQ, FG, FT packages		-	-	8	pF
I_{RPU}	Pad pull-up (when selected) @ V_{IN} = 0V, V_{CCO} = 3.3V (sample tested)(2)			-	-	0.25	mA
I_{RPD}	Pad pull-down (when selected) @ V_{IN} = 3.6V (sample tested)(2)			-	-	0.25	mA

Notes:
1. With no output current loads, no active input pull-up resistors, all I/O pins 3-stated and floating.
2. Internal pull-up and pull-down resistors guarantee valid logic levels at unconnected input pins. These pull-up and pull-down resistors do not provide valid logic levels when input pins are connected to other circuits.

Power-On Requirements

Spartan®-IIE FPGAs require that a minimum supply current I_{CCPO} be provided to the V_{CCINT} lines for a successful power-on. If more current is available, the FPGA can consume more than I_{CCPO} min., though this cannot adversely affect reliability.

A maximum limit for I_{CCPO} is not specified. Be careful when using foldback/crowbar supplies and fuses. It is possible to control the magnitude of I_{CCPO} by limiting the supply current available to the FPGA. A current limit below the trip level will avoid inadvertently activating over-current protection circuits.

Symbol	Description				Min(1)	Typ	Max	Units
I_{CCPO}	Total V_{CCINT} supply current required during power-on	Commercial	XC2S50E - XC2S300E	After PCN(2)	300	-	-	mA
				Before PCN(2)	500	-	-	mA
			XC2S400E - XC2S600E		500	-	-	mA
		Industrial	XC2S50E - XC2S300E	After PCN(2)	500	-	-	mA
				Before PCN(2)	2	-	-	A
			XC2S400E - XC2S600E		700	-	-	mA
T_{CCPO}	V_{CCINT}(3,4) ramp time		After PCN(2)		500	-	-	µs
			Before PCN(2)		2	-	50	ms
I_{HSPO}	AC current per pin during power-on in hot-swap applications when $V_{IN} > V_{CCO} + 0.4V$; duration < 10ns		After PCN(2)		-	±60	-	µA

Notes:
1. The I_{CCPO} requirement applies for a brief time (commonly only a few milliseconds) when V_{CCINT} ramps from 0 to 1.8V.
2. Devices built after the Product Change Notice PCN 2002-05 (see http://www.xilinx.com/support/documentation/customer_notices/pcn2002-05.pdf) have improved power-on requirements. Devices after the PCN have a 'T' preceding the date code as referenced in the PCN. Note that the XC2S150E, XC2S400E, and XC2S600E always have this mark. Devices before the PCN have an 'S' preceding the date code. Note that devices before the PCN are measured with V_{CCINT} and V_{CCO} powering up simultaneously.
3. The ramp time is measured from GND to 1.8V on a fully loaded board.
4. V_{CCINT} must not dip in the negative direction during power on.
5. I/Os are not guaranteed to be disabled until V_{CCINT} is applied.
6. For more information on designing to meet the power-on specifications, refer to the application note XAPP450 "Power-On Current Requirements for the Spartan-II and Spartan-IIE Families".

DC Input and Output Levels

Values for V_{IL} and V_{IH} are recommended input voltages. Values for V_{OL} and V_{OH} are guaranteed output voltages over the recommended operating conditions. Only selected standards are tested. These are chosen to ensure that all standards meet their specifications. The selected standards are tested at minimum V_{CCO} with the respective I_{OL} and I_{OH} currents shown. Other standards are sample tested.

Input/Output Standard	V_{IL}		V_{IH}		V_{OL}	V_{OH}	I_{OL}	I_{OH}
	V, Min	V, Max	V, Min	V, Max	V, Max	V, Min	mA	mA
LVTTL(1)	–0.5	0.8	2.0	3.6	0.4	2.4	24	–24
LVCMOS2	–0.5	0.7	1.7	2.7	0.4	1.9	12	–12
LVCMOS18	–0.5	35% V_{CCO}	65% V_{CCO}	1.95	0.4	$V_{CCO} - 0.4$	8	–8
PCI, 3.3V	–0.5	30% V_{CCO}	50% V_{CCO}	$V_{CCO} + 0.5$	10% V_{CCO}	90% V_{CCO}	Note (2)	Note (2)
GTL	–0.5	$V_{REF} - 0.05$	$V_{REF} + 0.05$	3.6	0.4	-	40	-
GTL+	–0.5	$V_{REF} - 0.1$	$V_{REF} + 0.1$	3.6	0.6	-	36	-

Input/Output Standard	V_{IL}		V_{IH}		V_{OL}	V_{OH}	I_{OL}	I_{OH}
	V, Min	V, Max	V, Min	V, Max	V, Max	V, Min	mA	mA
HSTL I	–0.5	V_{REF} – 0.1	V_{REF} + 0.1	3.6	0.4	V_{CCO} – 0.4	8	–8
HSTL III	–0.5	V_{REF} – 0.1	V_{REF} + 0.1	3.6	0.4	V_{CCO} – 0.4	24	–8
HSTL IV	–0.5	V_{REF} – 0.1	V_{REF} + 0.1	3.6	0.4	V_{CCO} – 0.4	48	–8
SSTL3 I	–0.5	V_{REF} – 0.2	V_{REF} + 0.2	3.6	V_{REF} – 0.6	V_{REF} + 0.6	8	–8
SSTL3 II	–0.5	V_{REF} – 0.2	V_{REF} + 0.2	3.6	V_{REF} – 0.8	V_{REF} + 0.8	16	–16
SSTL2 I	–0.5	V_{REF} – 0.2	V_{REF} + 0.2	3.6	V_{REF} – 0.61	V_{REF} + 0.61	7.6	–7.6
SSTL2 II	–0.5	V_{REF} – 0.2	V_{REF} + 0.2	3.6	V_{REF} – 0.8	V_{REF} + 0.8	15.2	–15.2
CTT	–0.5	V_{REF} – 0.2	V_{REF} + 0.2	3.6	V_{REF} – 0.4	V_{REF} + 0.4	8	–8
AGP	–0.5	V_{REF} – 0.2	V_{REF} + 0.2	3.6	10% V_{CCO}	90% V_{CCO}	Note (2)	Note (2)

Notes:
1. V_{OL} and V_{OH} for lower drive currents are sample tested.
2. Tested according to the relevant specifications.

LVDS DC Specifications

Symbol	Description	Conditions	Min	Typ	Max	Units
V_{CCO}	Supply voltage		2.375	2.5	2.625	V
V_{OH}	Output High voltage for Q and $\overline{Q}$	R_T = 100Ω across Q and $\overline{Q}$ signals	1.25	1.425	1.6	V
V_{OL}	Output Low voltage for Q and $\overline{Q}$	R_T = 100Ω across Q and $\overline{Q}$ signals	0.9	1.075	1.25	V
V_{ODIFF}	Differential output voltage (Q – $\overline{Q}$), Q = High or ($\overline{Q}$ – Q), $\overline{Q}$ = High	R_T = 100Ω across Q and $\overline{Q}$ signals	250	350	450	mV
V_{OCM}	Output common-mode voltage	R_T = 100Ω across Q and $\overline{Q}$ signals	1.125	1.25	1.375	V
V_{IDIFF}	Differential input voltage (Q – $\overline{Q}$), Q = High or ($\overline{Q}$ – Q), $\overline{Q}$ = High	Common-mode input voltage = 1.25 V	100	350	-	mV
V_{ICM}	Input common-mode voltage	Differential input voltage = ±350 mV	0.2	1.25	2.2	V

LVPECL DC Specifications

These values are valid at the output of the source termination pack shown under LVPECL, with a 100Ω differential load only. The V_{OH} levels are 200 mV below standard LVPECL levels and are compatible with devices tolerant of lower common-mode ranges. The following table summarizes the DC output specifications of LVPECL.

DC Parameter	Min	Max	Min	Max	Min	Max	Units
V_{CCO}	3.0		3.3		3.6		V
V_{OH}	1.8	2.11	1.92	2.28	2.13	2.41	V
V_{OL}	0.96	1.27	1.06	1.43	1.30	1.57	V
V_{IH}	1.49	2.72	1.49	2.72	1.49	2.72	V
V_{IL}	0.86	2.125	0.86	2.125	0.86	2.125	V
Differential input voltage	0.3	-	0.3	-	0.3	-	V

Switching Characteristics

Internal timing parameters are derived from measuring internal test patterns. Listed below are representative values. For more specific, more precise, and worst-case guaranteed data, use the values reported by the static timing analyzer (TRACE in the Xilinx Development System) and back-annotated to the simulation netlist. All timing parameters assume worst-case operating conditions (supply voltage and junction temperature). Values apply to all Spartan-IIE devices unless otherwise noted.

Global Clock Input to Output Delay for LVTTL, *with* DLL (Pin-to-Pin)(1)

Symbol	Description	Speed Grade			Units
		All	-7	-6	
		Min	Max	Max	
$T_{ICKOFDLL}$	LVTTL global clock input to output delay using output flip-flop for LVTTL, 12 mA, fast slew rate, *with* DLL.	1.0	3.1	3.1	ns

Notes:
1. Listed above are representative values where one global clock input drives one vertical clock line in each accessible column, and where all accessible IOB and CLB flip-flops are clocked by the global clock net.
2. Output timing is measured at 1.4V with 35 pF external capacitive load for LVTTL. The 35 pF load does not apply to the Min values. For other I/O standards and different loads, see the tables Constants for Calculating TIOOP and Delay Measurement Methodology, page 41.
3. DLL output jitter is already included in the timing calculation.
4. For data *output* with different standards, adjust delays with the values shown in IOB Output Delay Adjustments for Different Standards(1), page 40. For a global clock input with standards other than LVTTL, adjust delays with values from the I/O Standard Global Clock Input Adjustments, page 42.

Global Clock Input to Output Delay for LVTTL, *without* DLL (Pin-to-Pin)(1)

Symbol	Description	Device	Speed Grade			Units
			All	-7	-6	
			Min	Max	Max	
T_{ICKOF}	LVTTL global clock input to output delay using output flip-flop for LVTTL, 12 mA, fast slew rate, *without* DLL.	XC2S50E	1.5	4.4	4.6	ns
		XC2S100E	1.5	4.4	4.6	ns
		XC2S150E	1.5	4.5	4.7	ns
		XC2S200E	1.5	4.5	4.7	ns
		XC2S300E	1.5	4.5	4.7	ns
		XC2S400E	1.5	4.6	4.8	ns
		XC2S600E	1.6	4.7	4.9	ns

Notes:
1. Listed above are representative values where one global clock input drives one vertical clock line in each accessible column, and where all accessible IOB and CLB flip-flops are clocked by the global clock net.
2. Output timing is measured at 1.4V with 35 pF external capacitive load for LVTTL. The 35 pF load does not apply to the Min values. For other I/O standards and different loads, see the tables Constants for Calculating TIOOP and Delay Measurement Methodology, page 41.
3. For data *output* with different standards, adjust delays with the values shown in IOB Output Delay Adjustments for Different Standards(1), page 40. For a global clock input with standards other than LVTTL, adjust delays with values from the I/O Standard Global Clock Input Adjustments, page 42.

Global Clock Setup and Hold for LVTTL Standard, *with* DLL (Pin-to-Pin)

Symbol	Description	Speed Grade		Units
		-7	-6	
		Min	Min	
T_{PSDLL} / T_{PHDLL}	Input setup and hold time relative to global clock input signal for LVTTL standard, no delay, IFF,(1) *with* DLL	1.6 / 0	1.7 / 0	ns

Notes:
1. IFF = Input Flip-Flop or Latch
2. Setup time is measured relative to the Global Clock input signal with the fastest route and the lightest load. Hold time is measured relative to the Global Clock input signal with the slowest route and heaviest load.
3. DLL output jitter is already included in the timing calculation.
4. For data input with different standards, adjust the setup time delay by the values shown in IOB Input Delay Adjustments for Different Standards, page 38. For a global clock input with standards other than LVTTL, adjust delays with values from the I/O Standard Global Clock Input Adjustments, page 42.
5. A zero hold time listing indicates no hold time or a negative hold time.

Global Clock Setup and Hold for LVTTL Standard, *without* DLL (Pin-to-Pin)

Symbol	Description	Device	Speed Grade		Units
			-7	-6	
			Min	Min	
T_{PSFD} / T_{PHFD}	Input setup and hold time relative to global clock input signal for LVTTL standard, with delay, IFF,(1) *without* DLL	XC2S50E	1.8 / 0	1.8 / 0	ns
		XC2S100E	1.8 / 0	1.8 / 0	ns
		XC2S150E	1.9 / 0	1.9 / 0	ns
		XC2S200E	1.9 / 0	1.9 / 0	ns
		XC2S300E	2.0 / 0	2.0 / 0	ns
		XC2S400E	2.0 / 0	2.0 / 0	ns
		XC2S600E	2.1 / 0	2.1 / 0	ns

Notes:
1. IFF = Input Flip-Flop or Latch
2. Setup time is measured relative to the Global Clock input signal with the fastest route and the lightest load. Hold time is measured relative to the Global Clock input signal with the slowest route and heaviest load.
3. For data input with different standards, adjust the setup time delay by the values shown in IOB Input Delay Adjustments for Different Standards, page 38. For a global clock input with standards other than LVTTL, adjust delays with values from the I/O Standard Global Clock Input Adjustments, page 42.

IOB Input Switching Characteristics(1)

Input delays associated with the pad are specified for LVTTL levels. For other standards, adjust the delays with the values shown in IOB Input Delay Adjustments for Different Standards, page 38.

Symbol	Description	Device	Speed Grade -7 Min	Speed Grade -7 Max	Speed Grade -6 Min	Speed Grade -6 Max	Units
Propagation Delays							
T_{IOPI}	Pad to I output, no delay	All	0.4	0.8	0.4	0.8	ns
T_{IOPID}	Pad to I output, with delay	All	0.5	1.0	0.5	1.0	ns
T_{IOPLI}	Pad to output IQ via transparent latch, no delay	All	0.7	1.5	0.7	1.6	ns
T_{IOPLID}	Pad to output IQ via transparent latch, with delay	XC2S50E	1.3	3.0	1.3	3.1	ns
		XC2S100E	1.3	3.0	1.3	3.1	ns
		XC2S150E	1.3	3.2	1.3	3.3	ns
		XC2S200E	1.3	3.2	1.3	3.3	ns
		XC2S300E	1.3	3.2	1.3	3.3	ns
		XC2S400E	1.4	3.2	1.4	3.4	ns
		XC2S600E	1.5	3.5	1.5	3.7	ns
Sequential Delays							
T_{IOCKIQ}	Clock CLK to output IQ	All	0.1	0.7	0.1	0.7	ns
Setup/Hold Times with Respect to Clock CLK							
T_{IOPICK} / T_{IOICKP}	Pad, no delay	All	1.4 / 0	-	1.5 / 0	-	ns
$T_{IOPICKD}$ / $T_{IOICKPD}$	Pad, with delay	XC2S50E	2.9 / 0	-	2.9 / 0	-	ns
		XC2S100E	2.9 / 0	-	2.9 / 0	-	ns
		XC2S150E	3.1 / 0	-	3.1 / 0	-	ns
		XC2S200E	3.1 / 0	-	3.1 / 0	-	ns
		XC2S300E	3.1 / 0	-	3.1 / 0	-	ns
		XC2S400E	3.2 / 0	-	3.2 / 0	-	ns
		XC2S600E	3.5 / 0	-	3.5 / 0	-	ns
$T_{IOICECK}$ / $T_{IOCKICE}$	ICE input	All	0.7 / 0.01	-	0.7 / 0.01	-	ns
Set/Reset Delays							
$T_{IOSRCKI}$	SR input (IFF, synchronous)	All	0.9	-	1.0	-	ns
T_{IOSRIQ}	SR input to IQ (asynchronous)	All	0.5	1.2	0.5	1.4	ns
T_{GSRQ}	GSR to output IQ	All	3.8	8.5	3.8	9.7	ns

Notes:
1. Input timing for LVTTL is measured at 1.4V. For other I/O standards, see the table Delay Measurement Methodology, page 41.

IOB Input Delay Adjustments for Different Standards

Input delays associated with the pad are specified for LVTTL. For other standards, adjust the delays by the values shown. A delay adjusted in this way constitutes a worst-case limit.

Symbol	Description	Standard	Speed Grade		Units
			-7	-6	
Data Input Delay Adjustments					
T_{ILVTTL}	Standard-specific data input delay adjustments	LVTTL	0	0	ns
$T_{ILVCMOS2}$		LVCMOS2	0	0	ns
$T_{ILVCMOS18}$		LVCMOS18	0.20	0.20	ns
T_{ILVDS}		LVDS	0.15	0.15	ns
$T_{ILVPECL}$		LVPECL	0.15	0.15	ns
T_{IPCI33_3}		PCI, 33 MHz, 3.3V	0.08	0.08	ns
T_{IPCI66_3}		PCI, 66 MHz, 3.3V	–0.11	–0.11	ns
T_{IGTL}		GTL	0.14	0.14	ns
T_{IGTLP}		GTL+	0.14	0.14	ns
T_{IHSTL}		HSTL	0.04	0.04	ns
T_{ISSTL2}		SSTL2	0.04	0.04	ns
T_{ISSTL3}		SSTL3	0.04	0.04	ns
T_{ICTT}		CTT	0.10	0.10	ns
T_{IAGP}		AGP	0.04	0.04	ns

IOB Output Switching Characteristics

Output delays terminating at a pad are specified for LVTTL with 12 mA drive and fast slew rate. For other standards, adjust the delays with the values shown in IOB Output Delay Adjustments for Different Standards(1), page 40.

Symbol	Description	Speed Grade				Units
		-7		-6		
		Min	Max	Min	Max	
Propagation Delays						
T_{IOOP}	O input to pad	1.0	2.7	1.0	2.9	ns
T_{IOOLP}	O input to pad via transparent latch	1.2	3.1	1.2	3.4	ns
3-state Delays						
T_{IOTHZ}	T input to pad high impedance(1)	0.7	1.7	0.7	1.9	ns
T_{IOTON}	T input to valid data on pad	1.1	2.9	1.1	3.1	ns
$T_{IOTLPHZ}$	T input to pad high impedance via transparent latch(1)	0.8	2.0	0.8	2.2	ns
$T_{IOTLPON}$	T input to valid data on pad via transparent latch	1.2	3.2	1.2	3.4	ns
T_{GTS}	GTS to pad high impedance(1)	1.9	4.6	1.9	4.9	ns
Sequential Delays						
T_{IOCKP}	Clock CLK to pad	0.9	2.8	0.9	2.9	ns
T_{IOCKHZ}	Clock CLK to pad high impedance (synchronous)(1)	0.7	2.0	0.7	2.2	ns
T_{IOCKON}	Clock CLK to valid data on pad (synchronous)	1.1	3.2	1.1	3.4	ns
Setup/Hold Times with Respect to Clock CLK						
T_{IOOCK} / T_{IOCKO}	O input	1.0 / 0	-	1.1 / 0	-	ns
$T_{IOOCECK}$ / $T_{IOCKOCE}$	OCE input	0.7 / 0	-	0.7 / 0	-	ns
$T_{IOSRCKO}$ / $T_{IOCKOSR}$	SR input (OFF)	0.9 / 0	-	1.0 / 0	-	ns
T_{IOTCK} / T_{IOCKT}	3-state setup times, T input	0.6 / 0	-	0.7 / 0	-	ns
$T_{IOTCECK}$ / $T_{IOCKTCE}$	3-state setup times, TCE input	0.6 / 0	-	0.8 / 0	-	ns
$T_{IOSRCKT}$ / $T_{IOCKTSR}$	3-state setup times, SR input (TFF)	0.9 / 0	-	1.0 / 0	-	ns
Set/Reset Delays						
T_{IOSRP}	SR input to pad (asynchronous)	1.2	3.3	1.2	3.5	ns
T_{IOSRHZ}	SR input to pad high impedance (asynchronous)(1)	1.0	2.4	1.0	2.7	ns
T_{IOSRON}	SR input to valid data on pad (asynchronous)	1.4	3.7	1.4	3.9	ns
T_{IOGSRQ}	GSR to pad	3.8	8.5	3.8	9.7	ns

Notes:
1. Three-state turn-off delays should not be adjusted.

IOB Output Delay Adjustments for Different Standards(1)

Output delays terminating at a pad are specified for LVTTL with 12 mA drive and fast slew rate. For other standards, adjust the delays by the values shown. A delay adjusted in this way constitutes a worst-case limit.

Symbol	Description	Standard	Speed Grade		Units
			-7	-6	
Output Delay Adjustments (Adj)					
T_{OLVTTL_S2}	Standard-specific adjustments for output delays terminating at pads (based on standard capacitive load, C_{SL})	LVTTL, Slow, 2 mA	14.7	14.7	ns
T_{OLVTTL_S4}		4 mA	7.5	7.5	ns
T_{OLVTTL_S6}		6 mA	4.8	4.8	ns
T_{OLVTTL_S8}		8 mA	3.0	3.0	ns
T_{OLVTTL_S12}		12 mA	1.9	1.9	ns
T_{OLVTTL_S16}		16 mA	1.7	1.7	ns
T_{OLVTTL_S24}		24 mA	1.3	1.3	ns
T_{OLVTTL_F2}		LVTTL, Fast, 2 mA	13.1	13.1	ns
T_{OLVTTL_F4}		4 mA	5.3	5.3	ns
T_{OLVTTL_F6}		6 mA	3.1	3.1	ns
T_{OLVTTL_F8}		8 mA	1.0	1.0	ns
T_{OLVTTL_F12}		12 mA	0	0	ns
T_{OLVTTL_F16}		16 mA	–0.05	–0.05	ns
T_{OLVTTL_F24}		24 mA	–0.20	–0.20	ns
$T_{OLVCMOS2}$		LVCMOS2	0.09	0.09	ns
$T_{OLVCMOS18}$		LVCMOS18	0.7	0.7	ns
T_{OLVDS}		LVDS	–1.2	–1.2	ns
$T_{OLVPECL}$		LVPECL	–0.41	–0.41	ns
T_{OPCI33_3}		PCI, 33 MHz, 3.3V	2.3	2.3	ns
T_{OPCI66_3}		PCI, 66 MHz, 3.3V	–0.41	–0.41	ns
T_{OGTL}		GTL	0.49	0.49	ns
T_{OGTLP}		GTL+	0.8	0.8	ns
T_{OHSTL_I}		HSTL I	–0.51	–0.51	ns
T_{OHSTL_III}		HSTL III	–0.91	–0.91	ns
T_{OHSTL_IV}		HSTL IV	–1.01	–1.01	ns
T_{OSSTL2_I}		SSTL2 I	–0.51	–0.51	ns
T_{OSSLT2_II}		SSTL2 II	–0.91	–0.91	ns
T_{OSSTL3_I}		SSTL3 I	–0.51	–0.51	ns
T_{OSSTL3_II}		SSTL3 II	–1.01	–1.01	ns
T_{OCTT}		CTT	–0.61	–0.61	ns
T_{OAGP}		AGP	–0.91	–0.91	ns

Notes:

1. Output timing is measured at 1.4V with 35 pF external capacitive load for LVTTL. For other I/O standards and different loads, see the tables Constants for Calculating TIOOP and Delay Measurement Methodology, page 41.

Calculation of T_{IOOP} as a Function of Capacitance

T_{IOOP} is the propagation delay from the O Input of the IOB to the pad. The values for T_{IOOP} are based on the standard capacitive load (C_{SL}) for each I/O standard as listed in the table Constants for Calculating TIOOP, below.

For other capacitive loads, use the formulas below to calculate an adjusted propagation delay, T_{IOOP1}.

$$T_{IOOP1} = T_{IOOP} + Adj + (C_{LOAD} - C_{SL}) * F_L$$

Where:

- Adj — is selected from IOB Output Delay Adjustments for Different Standards(1), page 40, according to the I/O standard used
- C_{LOAD} — is the capacitive load for the design
- F_L — is the capacitance scaling factor

Delay Measurement Methodology

Standard	V_L(1)	V_H(1)	Meas. Point	V_{REF} Typ(2)
LVTTL	0	3	1.4	-
LVCMOS2	0	2.5	1.125	-
PCI33_3	Per PCI Spec			-
PCI66_3	Per PCI Spec			-
GTL	$V_{REF} - 0.2$	$V_{REF} + 0.2$	V_{REF}	0.80
GTL+	$V_{REF} - 0.2$	$V_{REF} + 0.2$	V_{REF}	1.0
HSTL Class I	$V_{REF} - 0.5$	$V_{REF} + 0.5$	V_{REF}	0.75
HSTL Class III	$V_{REF} - 0.5$	$V_{REF} + 0.5$	V_{REF}	0.90
HSTL Class IV	$V_{REF} - 0.5$	$V_{REF} + 0.5$	V_{REF}	0.90
SSTL3 I and II	$V_{REF} - 1.0$	$V_{REF} + 1.0$	V_{REF}	1.5
SSTL2 I and II	$V_{REF} - 0.75$	$V_{REF} + 0.75$	V_{REF}	1.25
CTT	$V_{REF} - 0.2$	$V_{REF} + 0.2$	V_{REF}	1.5
AGP	$V_{REF} - (0.2xV_{CCO})$	$V_{REF} + (0.2xV_{CCO})$	V_{REF}	Per AGP Spec
LVDS	1.2 – 0.125	1.2 + 0.125	1.2	
LVPECL	1.6 – 0.3	1.6 + 0.3	1.6	

Notes:
1. Input waveform switches between V_L and V_H.
2. Measurements are made at V_{REF} Typ, Maximum, and Minimum. Worst-case values are reported.
3. I/O parameter measurements are made with the capacitance values shown in the following table, Constants for Calculating TIOOP. Refer to Application Note XAPP179 for appropriate terminations.
4. I/O standard measurements are reflected in the IBIS model information except where the IBIS format precludes it.

Constants for Calculating T_{IOOP}

Standard	C_{SL}(1) (pF)	F_L (ns/pF)
LVTTL Fast Slew Rate, 2 mA drive	35	0.41
LVTTL Fast Slew Rate, 4 mA drive	35	0.20
LVTTL Fast Slew Rate, 6 mA drive	35	0.13
LVTTL Fast Slew Rate, 8 mA drive	35	0.079
LVTTL Fast Slew Rate, 12 mA drive	35	0.044
LVTTL Fast Slew Rate, 16 mA drive	35	0.043
LVTTL Fast Slew Rate, 24 mA drive	35	0.033
LVTTL Slow Slew Rate, 2 mA drive	35	0.41
LVTTL Slow Slew Rate, 4 mA drive	35	0.20
LVTTL Slow Slew Rate, 6 mA drive	35	0.100
LVTTL Slow Slew Rate, 8 mA drive	35	0.086
LVTTL Slow Slew Rate, 12 mA drive	35	0.058
LVTTL Slow Slew Rate, 16 mA drive	35	0.050
LVTTL Slow Slew Rate, 24 mA drive	35	0.048
LVCMOS2	35	0.041
LVCMOS18	35	0.050
PCI 33 MHz 3.3V	10	0.050
PCI 66 MHz 3.3V	10	0.033
GTL	0	0.014
GTL+	0	0.017
HSTL Class I	20	0.022
HSTL Class III	20	0.016
HSTL Class IV	20	0.014
SSTL2 Class I	30	0.028
SSTL2 Class II	30	0.016
SSTL3 Class I	30	0.029
SSTL3 Class II	30	0.016
CTT	20	0.035
AGP	10	0.037

Notes:
1. I/O parameter measurements are made with the capacitance values shown above. Refer to Application Note XAPP179 for appropriate terminations.
2. I/O standard measurements are reflected in the IBIS model information except where the IBIS format precludes it.

Clock Distribution Switching Characteristics

T_{GPIO} is specified for LVTTL levels. For other standards, adjust T_{GPIO} with the values shown in I/O Standard Global Clock Input Adjustments.

Symbol	Description	Speed Grade		Units
		-7	-6	
		Max	Max	
GCLK IOB and Buffer				
T_{GPIO}	Global clock pad to output	0.7	0.7	ns
T_{GIO}	Global clock buffer I input to O output	0.45	0.5	ns

I/O Standard Global Clock Input Adjustments

Delays associated with a global clock input pad are specified for LVTTL levels. For other standards, adjust the delays by the values shown. A delay adjusted in this way constitutes a worst-case limit.

Symbol	Description	Standard	Speed Grade		Units
			-7	-6	
Data Input Delay Adjustments					
$T_{GPLVTTL}$	Standard-specific global clock input delay adjustments	LVTTL	0	0	ns
$T_{GPLVCMOS2}$		LVCMOS2	0	0	ns
$T_{GPLVCMOS18}$		LVCMOS18	0.2	0.2	ns
$T_{GPLVCDS}$		LVDS	0.38	0.38	ns
$T_{GPLVPECL}$		LVCPECL	0.38	0.38	ns
$T_{GPPCI33_3}$		PCI, 33 MHz, 3.3V	0.08	0.08	ns
$T_{GPPCI66_3}$		PCI, 66 MHz, 3.3V	–0.11	–0.11	ns
T_{GPGTL}		GTL	0.37	0.37	ns
T_{GPGTLP}		GTL+	0.37	0.37	ns
T_{GPHSTL}		HSTL	0.27	0.27	ns
$T_{GPSSTL2}$		SSTL2	0.27	0.27	ns
$T_{GPSSTL3}$		SSTL3	0.27	0.27	ns
T_{GPCTT}		CTT	0.33	0.33	ns
T_{GPAGP}		AGP	0.27	0.27	ns

Notes:
1. Input timing for GPLVTTL is measured at 1.4V. For other I/O standards, see the table Delay Measurement Methodology, page 41.

DLL Timing Parameters

Because of the difficulty in directly measuring many internal timing parameters, those parameters are derived from benchmark timing patterns. The following guidelines reflect worst-case values across the recommended operating conditions.

Symbol	Description	F_{CLKIN}	Speed Grade -7 Min	Speed Grade -7 Max	Speed Grade -6 Min	Speed Grade -6 Max	Units
$F_{CLKINHF}$	Input clock frequency (CLKDLLHF)	-	60	320	60	275	MHz
$F_{CLKINLF}$	Input clock frequency (CLKDLL)	-	25	160	25	135	MHz
T_{DLLPW}	Input clock pulse width	≥25 MHz	5.0	-	5.0	-	ns
		≥50 MHz	3.0	-	3.0	-	ns
		≥100 MHz	2.4	-	2.4	-	ns
		≥150 MHz	2.0	-	2.0	-	ns
		≥200 MHz	1.8	-	1.8	-	ns
		≥250 MHz	1.5	-	1.5	-	ns
		≥300 MHz	1.3	-	NA	-	

DLL Clock Tolerance, Jitter, and Phase Information

All DLL output jitter and phase specifications were determined through statistical measurement at the package pins using a clock mirror configuration and matched drivers. Figure 22, page 44, provides definitions for various parameters in the table below.

Symbol	Description	F_{CLKIN}	CLKDLLHF Min	CLKDLLHF Max	CLKDLL Min	CLKDLL Max	Units
T_{IPTOL}	Input clock period tolerance		-	1.0	-	1.0	ns
T_{IJITCC}	Input clock jitter tolerance (cycle-to-cycle)		-	±150	-	±300	ps
T_{LOCK}	Time required for DLL to acquire lock(1)	> 60 MHz	-	20	-	20	µs
		50-60 MHz	-	-	-	25	µs
		40-50 MHz	-	-	-	50	µs
		30-40 MHz	-	-	-	90	µs
		25-30 MHz	-	-	-	120	µs
T_{OJITCC}	Output jitter (cycle-to-cycle) for any DLL clock output(2)		-	±60	-	±60	ps
T_{PHIO}	Phase offset between CLKIN and CLKO(3)		-	±100	-	±100	ps
T_{PHOO}	Phase offset between clock outputs on the DLL(4)		-	±140	-	±140	ps
T_{PHIOM}	Phase difference between CLKIN and CLKO(5)		-	±160	-	±160	ps
T_{PHOOM}	Phase difference between clock outputs on the DLL(6)		-	±200	-	±200	ps

Notes:
1. Commercial operating conditions. Add 30% for Industrial operating conditions.
2. **Output Jitter** is cycle-to-cycle jitter measured on the DLL output clock, *excluding* input clock jitter.
3. **Phase Offset between CLKIN and CLKO** is the worst-case fixed time difference between rising edges of CLKIN and CLKO, *excluding* output jitter and input clock jitter.
4. **Phase Offset between Clock Outputs on the DLL** is the worst-case fixed time difference between rising edges of any two DLL outputs, *excluding* output jitter and input clock jitter.
5. **Maximum Phase Difference between CLKIN and CLKO** is the sum of output jitter and phase offset between CLKIN and CLKO, or the greatest difference between CLKIN and CLKO rising edges due to DLL alone (*excluding* input clock jitter).
6. **Maximum Phase Difference between Clock Outputs on the DLL** is the sum of output jitter and phase offset between any DLL clock outputs, or the greatest difference between any two DLL output rising edges due to DLL alone (*excluding* input clock jitter).

Period Tolerance: the allowed input clock period change in nanoseconds.

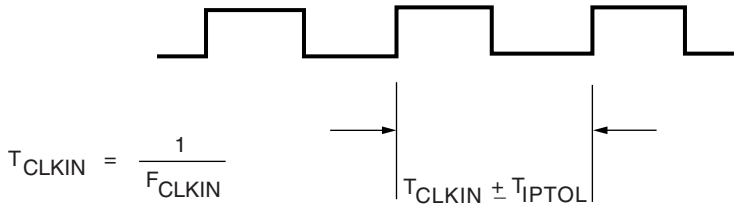

Output Jitter: the difference between an ideal reference clock edge and the actual design.

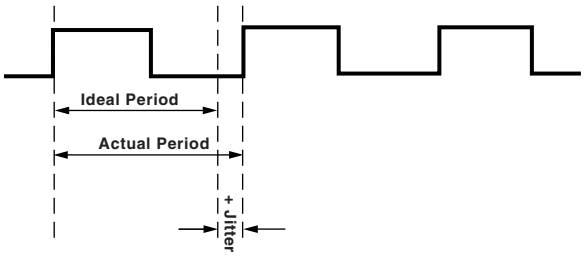

Phase Offset and Maximum Phase Difference

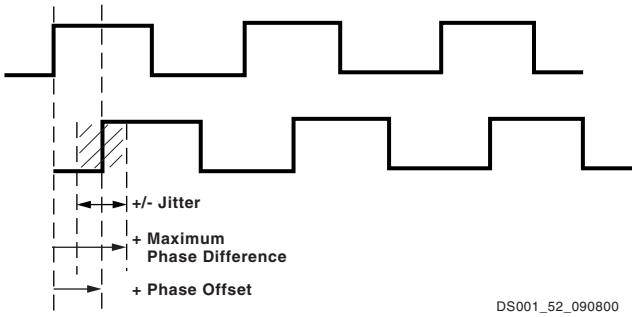

Figure 22: **Period Tolerance and Clock Jitter**

CLB Switching Characteristics

Delays originating at F/G inputs vary slightly according to the input used. The values listed below are worst-case. Precise values are provided by the timing analyzer.

Symbol	Description	Speed Grade				Units
		-7		-6		
		Min	Max	Min	Max	
Combinatorial Delays						
T_{ILO}	4-input function: F/G inputs to X/Y outputs	0.18	0.42	0.18	0.47	ns
T_{IF5}	5-input function: F/G inputs to F5 output	0.3	0.8	0.3	0.9	ns
T_{IF5X}	5-input function: F/G inputs to X output	0.3	0.8	0.3	0.9	ns
T_{IF6Y}	6-input function: F/G inputs to Y output via F6 MUX	0.3	0.9	0.3	1.0	ns
T_{F5INY}	6-input function: F5IN input to Y output	0.04	0.2	0.04	0.22	ns
T_{IFNCTL}	Incremental delay routing through transparent latch to XQ/YQ outputs	-	0.7	-	0.8	ns
T_{BYYB}	BY input to YB output	0.18	0.46	0.18	0.51	ns
Sequential Delays						
T_{CKO}	FF clock CLK to XQ/YQ outputs	0.3	0.9	0.3	1.0	ns
T_{CKLO}	Latch clock CLK to XQ/YQ outputs	0.3	0.9	0.3	1.0	ns
Setup/Hold Times with Respect to Clock CLK						
T_{ICK} / T_{CKI}	4-input function: F/G inputs	1.0 / 0	-	1.1 / 0	-	ns
T_{IF5CK} / T_{CKIF5}	5-input function: F/G inputs	1.4 / 0	-	1.5 / 0	-	ns
T_{F5INCK} / T_{CKF5IN}	6-input function: F5IN input	0.8 / 0	-	0.8 / 0	-	ns
T_{IF6CK} / T_{CKIF6}	6-input function: F/G inputs via F6 MUX	1.5 / 0	-	1.6 / 0	-	ns
T_{DICK} / T_{CKDI}	BX/BY inputs	0.7 / 0	-	0.8 / 0	-	ns
T_{CECK} / T_{CKCE}	CE input	0.7 / 0	-	0.7 / 0	-	ns
T_{RCK} / T_{CKR}	SR/BY inputs (synchronous)	0.52 / 0	-	0.6 / 0	-	ns
Clock CLK						
T_{CH}	Pulse width, High	1.3	-	1.4	-	ns
T_{CL}	Pulse width, Low	1.3	-	1.4	-	ns
Set/Reset						
T_{RPW}	Pulse width, SR/BY inputs	2.1	-	2.4	-	ns
T_{RQ}	Delay from SR/BY inputs to XQ/YQ outputs (asynchronous)	0.3	0.9	0.3	1.0	ns
F_{TOG}	Toggle frequency (for export control)	-	400	-	357	MHz

CLB Arithmetic Switching Characteristics

Setup times not listed explicitly can be approximated by decreasing the combinatorial delays by the setup time adjustment listed. Precise values are provided by the timing analyzer.

Symbol	Description	Speed Grade				Units
		-7		-6		
		Min	Max	Min	Max	
Combinatorial Delays						
T_{OPX}	F operand inputs to X via XOR	-	0.8	-	0.8	ns
T_{OPXB}	F operand input to XB output	-	0.8	-	0.9	ns
T_{OPY}	F operand input to Y via XOR	-	1.4	-	1.5	ns
T_{OPYB}	F operand input to YB output	-	1.1	-	1.3	ns
T_{OPCYF}	F operand input to COUT output	-	0.9	-	1.0	ns
T_{OPGY}	G operand inputs to Y via XOR	-	0.8	-	0.9	ns
T_{OPGYB}	G operand input to YB output	-	1.2	-	1.3	ns
T_{OPCYG}	G operand input to COUT output	-	0.9	-	1.0	ns
T_{BXCY}	BX initialization input to COUT	-	0.51	-	0.6	ns
T_{CINX}	CIN input to X output via XOR	-	0.6	-	0.7	ns
T_{CINXB}	CIN input to XB	-	0.07	-	0.1	ns
T_{CINY}	CIN input to Y via XOR	-	0.7	-	0.7	ns
T_{CINYB}	CIN input to YB	-	0.4	-	0.5	ns
T_{BYP}	CIN input to COUT output	-	0.14	-	0.15	ns
Multiplier Operation						
T_{FANDXB}	F1/2 operand inputs to XB output via AND	-	0.35	-	0.4	ns
T_{FANDYB}	F1/2 operand inputs to YB output via AND	-	0.7	-	0.8	ns
T_{FANDCY}	F1/2 operand inputs to COUT output via AND	-	0.5	-	0.6	ns
T_{GANDYB}	G1/2 operand inputs to YB output via AND	-	0.6	-	0.7	ns
T_{GANDCY}	G1/2 operand inputs to COUT output via AND	-	0.3	-	0.4	ns
Setup/Hold Times with Respect to Clock CLK						
T_{CCKX} / T_{CKCX}	CIN input to FFX	1.2 / 0	-	1.3 / 0	-	ns
T_{CCKY} / T_{CKCY}	CIN input to FFY	1.2 / 0	-	1.3 / 0	-	ns

CLB Distributed RAM Switching Characteristics

Symbol	Description	Speed Grade -7 Min	Speed Grade -7 Max	Speed Grade -6 Min	Speed Grade -6 Max	Units
Sequential Delays						
$T_{SHCKO16}$	Clock CLK to X/Y outputs (WE active, 16 x 1 mode)	0.6	1.5	0.6	1.7	ns
$T_{SHCKO32}$	Clock CLK to X/Y outputs (WE active, 32 x 1 mode)	0.8	1.9	0.8	2.1	ns
Setup/Hold Times with Respect to Clock CLK						
T_{AS} / T_{AH}	F/G address inputs	0.42 / 0	-	0.5 / 0	-	ns
T_{DS} / T_{DH}	BX/BY data inputs (DIN)	0.53 / 0	-	0.6 / 0	-	ns
T_{WS} / T_{WH}	CE input (WS)	0.7 / 0	-	0.8 / 0	-	ns
Clock CLK						
T_{WPH}	Pulse width, High	2.1	-	2.4	-	ns
T_{WPL}	Pulse width, Low	2.1	-	2.4	-	ns
T_{WC}	Clock period to meet address write cycle time	4.2	-	4.8	-	ns

CLB Shift Register Switching Characteristics

Symbol	Description	Speed Grade -7 Min	Speed Grade -7 Max	Speed Grade -6 Min	Speed Grade -6 Max	Units
Sequential Delays						
T_{REG}	Clock CLK to X/Y outputs	1.2	2.9	1.2	3.2	ns
Setup/Hold Times with Respect to Clock CLK						
T_{SHDICK}	BX/BY data inputs (DIN)	0.53 / 0	-	0.6 / 0	-	ns
T_{SHCECK}	CE input (WS)	0.7 / 0	-	0.8 / 0	-	ns
Clock CLK						
T_{SRPH}	Pulse width, High	2.1	-	2.4	-	ns
T_{SRPL}	Pulse width, Low	2.1	-	2.4	-	ns

Block RAM Switching Characteristics

Symbol	Description	Speed Grade -7 Min	Speed Grade -7 Max	Speed Grade -6 Min	Speed Grade -6 Max	Units
Sequential Delays						
T_{BCKO}	Clock CLK to DOUT output	0.6	3.1	0.6	3.5	ns
Setup/Hold Times with Respect to Clock CLK						
T_{BACK} / T_{BCKA}	ADDR inputs	1.0 / 0	-	1.1 / 0	-	ns
T_{BDCK}/ T_{BCKD}	DIN inputs	1.0 / 0	-	1.1 / 0	-	ns
T_{BECK}/ T_{BCKE}	EN inputs	2.2 / 0	-	2.5 / 0	-	ns
T_{BRCK}/ T_{BCKR}	RST input	2.1 / 0	-	2.3 / 0	-	ns
T_{BWCK}/ T_{BCKW}	WEN input	2.0 / 0	-	2.2 / 0	-	ns
Clock CLK						
T_{BPWH}	Pulse width, High	1.4	-	1.5	-	ns
T_{BPWL}	Pulse width, Low	1.4	-	1.5	-	ns
T_{BCCS}	CLKA -> CLKB setup time for different ports	2.7	-	3.0	-	ns

TBUF Switching Characteristics

Symbol	Description	Speed Grade -7 Max	Speed Grade -6 Max	Units
T_{IO}	IN input to OUT output	0	0	ns
T_{OFF}	TRI input to OUT output high impedance	0.1	0.11	ns
T_{ON}	TRI input to valid data on OUT output	0.1	0.11	ns

JTAG Test Access Port Switching Characteristics

Symbol	Description	Speed Grade -7 Min	Speed Grade -7 Max	Speed Grade -6 Min	Speed Grade -6 Max	Units
Setup/Hold Times with Respect to TCK						
T_{TAPTCK} / T_{TCKTAP}	TMS and TDI setup times and hold times	4.0 / 2.0	-	4.0 / 2.0	-	ns
Sequential Delays						
T_{TCKTDO}	Output delay from clock TCK to output TDO	-	11.0	-	11.0	ns
FTCK	TCK clock frequency	-	33	-	33	MHz

Configuration Switching Characteristics

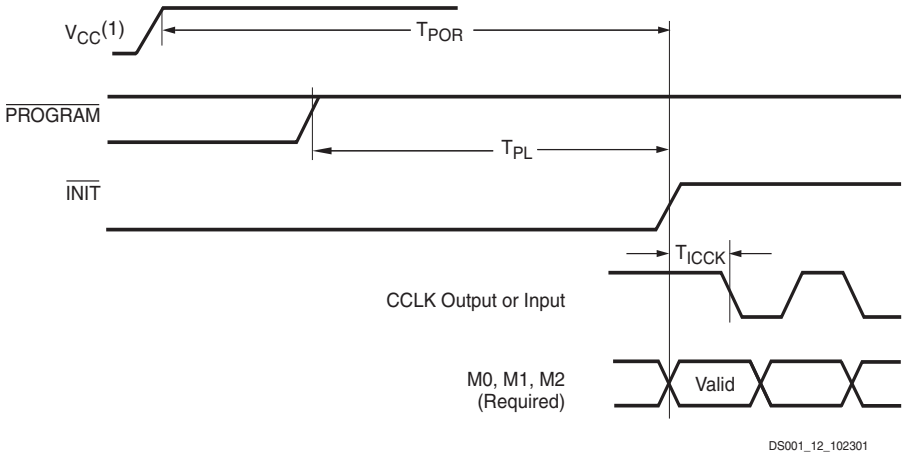

Symbol	Description	All Devices Min	All Devices Max	Units
T_{POR}	Power-on reset	-	2	ms
T_{PL}	Program latency	-	100	µs
T_{ICCK}	CCLK output delay (Master serial mode only)	0.5	4	µs
$T_{PROGRAM}$	Program pulse width	300	-	ns

Notes:
1. Before configuration can begin, V_{CCINT} and V_{CCO} Bank 2 must reach the recommended operating voltage.

Figure 23: **Configuration Timing on Power-Up**

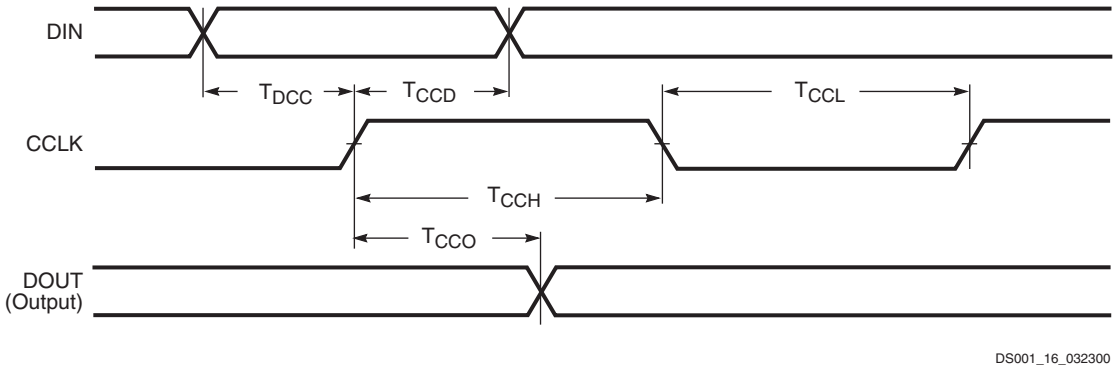

Symbol		Description	All Devices		Units
			Min	Max	
T_{DCC} / T_{CCD}	CCLK	DIN setup/hold	5 / 0	-	ns
T_{CCO}		DOUT	-	12	ns
T_{CCH}		High time	5	-	ns
T_{CCL}		Low time	5	-	ns
F_{CC}		Maximum frequency	-	66	MHz

Figure 24: **Slave Serial Mode Timing**

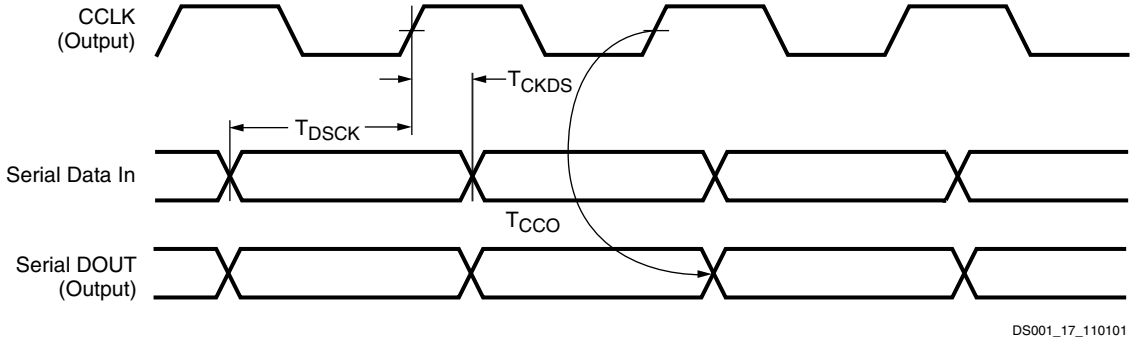

Symbol		Description	All Devices		Units
			Min	Max	
T_{DSCK} / T_{CKDS}	CCLK	DIN setup/hold	5 / 0	-	ns
T_{CCO}		DOUT	-	12	ns
F_{CC}		Frequency tolerance with respect to nominal	–30%	+45%	-

Figure 25: **Master Serial Mode Timing**

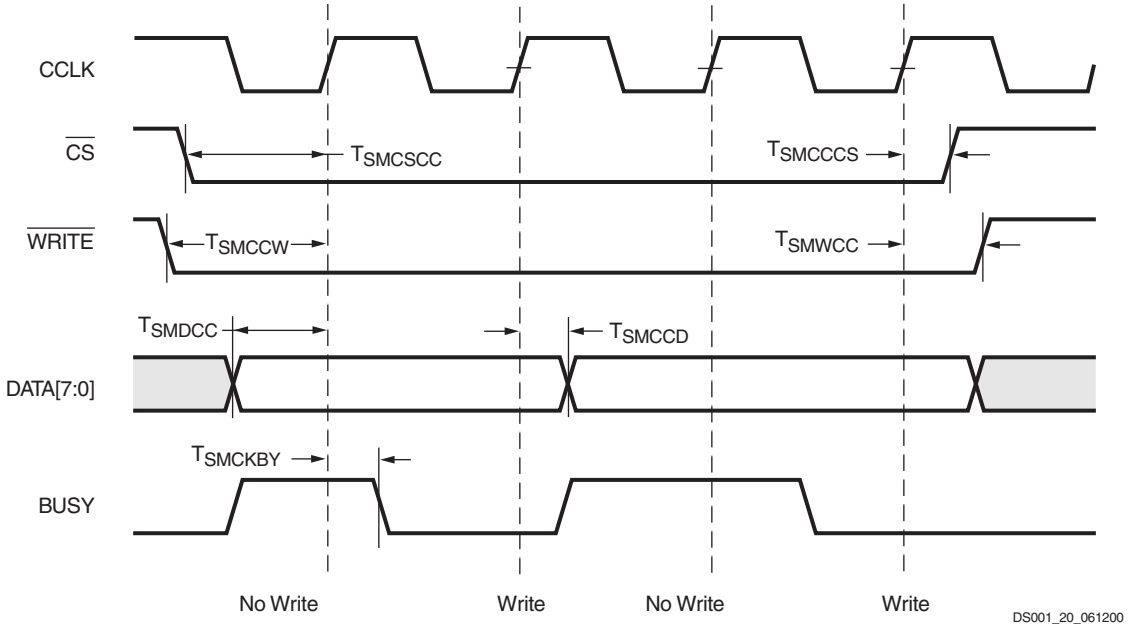

Symbol		Description	All Devices Min	All Devices Max	Units
T_{SMDCC} / T_{SMCCD}	CCLK	D0-D7 setup/hold	5 / 1	-	ns
T_{SMCSCC} / T_{SMCCCS}		$\overline{CS}$ setup/hold	7 / 1	-	ns
T_{SMCCW} / T_{SMWCC}		$\overline{WRITE}$ setup/hold	7 / 1	-	ns
T_{SMCKBY}		BUSY propagation delay	-	12	ns
F_{CC}		Frequency	-	66	MHz
F_{CCNH}		Frequency with no handshake	-	50	MHz

Figure 26: **Slave Parallel (SelectMAP) Mode Write Timing**

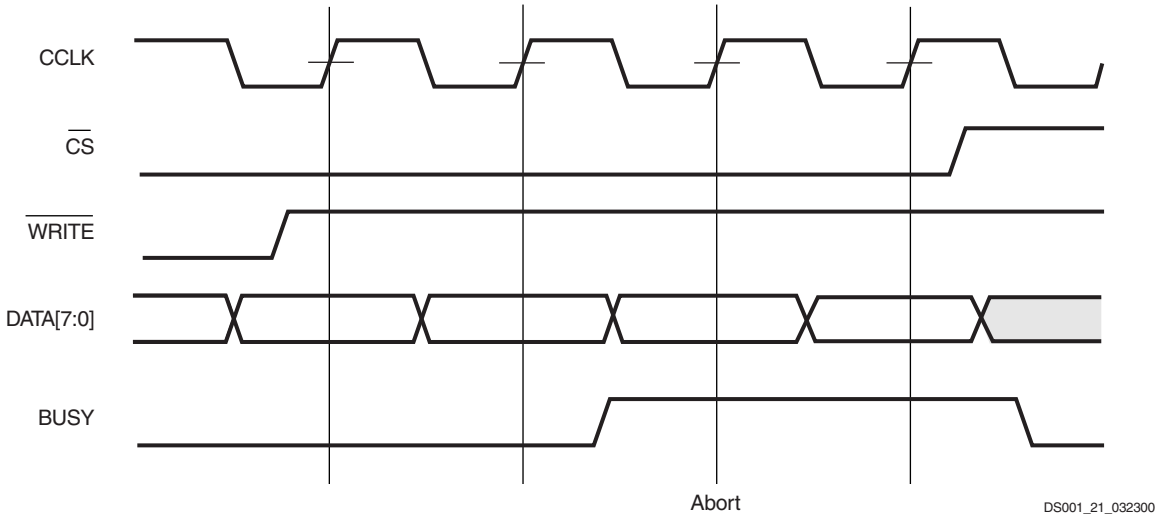

Figure 27: **Slave Parallel (SelectMAP) Mode Write Abort Waveforms**

Revision History

Version No.	Date	Description
1.0	11/15/01	Initial Xilinx release.
1.1	06/28/02	Added -7 speed grade and extended DLL specs to Industrial.
2.0	11/18/02	Added XC2S400E and XC2S600E. Added minimum specifications. Added reference to XAPP450 for Power-On Requirements. Removed Preliminary designation.
2.1	07/09/03	Added ICCINTQ typical values. Reduced ICCPO power-on current requirements. Relaxed TCCPO power-on ramp requirements. Added IHSPO to describe current in hot-swap applications. Updated TPSFD / TPHFD description to indicate use of delay element.
2.3	06/18/08	Updated I/O measurement thresholds. Updated all modules for continuous page, figure, and table numbering. Updated links. Synchronized all modules to v2.3.

Introduction

This section describes how the various pins on a Spartan®-IIE FPGA connect within the supported component packages, and provides device-specific thermal characteristics. Spartan-IIE FPGAs are available in both standard and Pb-free, RoHS versions of each package, with the Pb-free version adding a “G” to the middle of the package code. Except for the thermal characteristics, all information for the standard package applies equally to the Pb-free package.

Pin Types

Most pins on a Spartan-IIE FPGA are general-purpose, user-defined I/O pins. There are, however, different functional types of pins on Spartan-IIE FPGA packages, as outlined below.

Pin Definitions

Pad Name	Dedicated Pin	Direction	Description
GCK0, GCK1, GCK2, GCK3	No	Input	Clock input pins that connect to Global Clock buffers or DLL inputs. These pins become user inputs when not needed for clocks.
DLL	No	Input	Clock input pins that connect to DLL input or feedback clocks. Differential clock input (N input of pair) when paired with adjacent GCK input. Becomes a user I/O when not needed for clocks.
M0, M1, M2	Yes	Input	Mode pins used to specify the configuration mode.
CCLK	Yes	Input or Output	The configuration Clock I/O pin. It is an input for Slave Parallel and Slave Serial modes, and output in Master Serial mode. After configuration, it is an input only with Don’t Care logic levels.
$\overline{\text{PROGRAM}}$	Yes	Input	Initiates a configuration sequence when asserted Low.
DONE	Yes	Bidirectional	Indicates that configuration loading is complete, and that the start-up sequence is in progress. The output may be open drain.
$\overline{\text{INIT}}$	No	Bidirectional (Open-drain)	When Low, indicates that the configuration memory is being cleared. Goes High to indicate the end of initialization. Goes back Low to indicate a CRC error. This pin becomes a user I/O after configuration.
DOUT/BUSY	No	Output	In Slave Parallel mode, BUSY controls the rate at which configuration data can be loaded. It is not needed below 50 MHz. This pin becomes a user I/O after configuration unless the Slave Parallel port is retained. In serial modes, DOUT provides configuration data to downstream devices in a daisy-chain. This pin becomes a user I/O after configuration.

© 2003-2007 Xilinx, Inc. All rights reserved. XILINX, the Xilinx logo, the Brand Window, and other designated brands included herein are trademarks of Xilinx, Inc. All other trademarks are the property of their respective owners.

Pin Definitions *(Continued)*

Pad Name	Dedicated Pin	Direction	Description
D0/DIN, D1, D2, D3, D4, D5, D6, D7	No	Input or Output	In Slave Parallel mode, D0-D7 are configuration data input pins. During readback, D0-D7 are output pins. These pins become user I/Os after configuration unless the Slave Parallel port is retained. In serial modes, DIN is the single data input. This pin becomes a user I/O after configuration.
$\overline{\text{WRITE}}$	No	Input	In Slave Parallel mode, the active-low Write Enable signal. This pin becomes a user I/O after configuration unless the Slave Parallel port is retained.
$\overline{\text{CS}}$	No	Input	In Slave Parallel mode, the active-low Chip Select signal. This pin becomes a user I/O after configuration unless the Slave Parallel port is retained.
TDI, TDO, TMS, TCK	Yes	Mixed	Boundary Scan Test Access Port pins (IEEE 1149.1).
V_{CCINT}	Yes	Input	1.8V power supply pins for the internal core logic.
V_{CCO}	Yes	Input	Power supply pins for output drivers (1.5V, 1.8V, 2.5V, or 3.3V subject to banking rules in the Functional Description module.
V_{REF}	No	Input	Input threshold reference voltage pins. Become user I/Os when an external threshold voltage is not needed (subject to banking rules in the Functional Description module.
GND	Yes	Input	Ground. All must be connected.
IRDY, TRDY	No	See PCI core documentation	These signals can only be accessed when using Xilinx PCI cores. If the cores are not used, these pins are available as user I/Os.
L#[P/N] (e.g., L0P)	No	Bidirectional	Differential I/O with synchronous output. P = positive, N = negative. The number (#) is used to associate the two pins of a differential pair. Becomes a general user I/O when not needed for differential signals.
L#[P/N]_Y (e.g., L0P_Y)	No	Bidirectional	Differential I/O with asynchronous or synchronous output (asynchronous output not compatible for all densities in a package). P = positive, N = negative. The number (#) is used to associate the two pins of a differential pair. Becomes a general user I/O when not needed for differential signals.
L#[P/N]_YY (e.g., L0P_YY)	No	Bidirectional	Differential I/O with asynchronous or synchronous output (compatible for all densities in a package). P = positive, N = negative. The number (#) is used to associate the two pins of a differential pair. Becomes a general user I/O when not needed for differential signals.
I/O	No	Bidirectional	These pins can be configured to be input and/or output after configuration is completed. Unused I/Os are disabled with a weak pull-down resistor. After power-on and before configuration is completed, these pins are either pulled up or left floating according to the Mode pin values. See the DC and Switching Characteristics module for power-on characteristics.

Spartan-IIE Package Pinouts

The Spartan®-IIE family of FPGAs is available in five popular, low-cost packages, including plastic quad flat packs and fine-pitch ball grid arrays. Family members have footprint compatibility across devices provided in the same package, with minor exceptions due to the smaller number of I/O in smaller devices or due to LVDS/LVPECL pin pairing. The Spartan-IIE family is not footprint compatible with any other FPGA family. The following package-specific pinout tables indicate function, pin, and bank information for all devices available in that package. The pinouts follow the pad locations around the die, starting from pin 1 on the QFP packages.

Table 12: **Spartan-IIE Family Package Options**

Package	Leads	Type	Maximum I/O	Lead Pitch (mm)	Footprint Area (mm)	Height (mm)	Mass(1) (g)
TQ144 / TQG144	144	Thin Quad Flat Pack (TQFP)	102	0.5	22 x 22	1.60	1.4
PQ208 / PQG208	208	Plastic Quad Flat Pack (PQFP)	146	0.5	30.6 x 30.6	3.70	5.3
FT256 / FTG256	256	Fine-pitch Thin Ball Grid Array (FBGA)	182	1.0	17 x 17	1.55	1.0
FG456 / FGG456	456	Fine-pitch Ball Grid Array (FBGA)	329	1.0	23 x 23	2.60	2.2
FG676 / FGG676	676	Fine-pitch Ball Grid Array (FBGA)	514	1.0	27 x 27	2.60	3.1

Notes:

1. Package mass is ±10%.

Package Overview

Table 12 shows the five low-cost, space-saving production package styles for the Spartan-IIE family.

Each package style is available in an environmentally friendly lead-free (Pb-free) option. The Pb-free packages include an extra ‘G’ in the package style name. For example, the standard “TQ144” package becomes “TQG144” when ordered as the Pb-free option. Leaded (non-Pb-free) packages may be available for selected devices, with the same pin-out and without the "G" in the ordering code; contact Xilinx® sales for more information. The mechanical dimensions of the standard and Pb-free packages are similar, as shown in the mechanical drawings provided in Table 13.

For additional package information, see UG112: *Device Package User Guide*.

Mechanical Drawings

Detailed mechanical drawings for each package type are available from the Xilinx web site at the specified location in Table 13.

Material Declaration Data Sheets (MDDS) are also available on the Xilinx web site for each package.

Table 13: **Xilinx Package Documentation**

Package	Drawing	MDDS
TQ144	Package Drawing	PK169_TQ144
TQG144		PK126_TQG144
PQ208	Package Drawing	PK166_PQ208
PQG208		PK123_PQG208
FT256	Package Drawing	PK158_FT256
FTG256		PK115_FTG256
FG456	Package Drawing	PK154_FG456
FGG456		PK109_FGG456
FG676	Package Drawing	PK155_FG676
FGG676		PK111_FGG676

Package Thermal Characteristics

Table 14 provides the thermal characteristics for the various Spartan-II FPGA package offerings. This information is also available using the Thermal Query tool on xilinx.com (www.xilinx.com/cgi-bin/thermal/thermal.pl).

The junction-to-case thermal resistance (θ_{JC}) indicates the difference between the temperature measured on the package body (case) and the die junction temperature per watt of power consumption. The junction-to-board (θ_{JB}) value similarly reports the difference between the board and junction temperature. The junction-to-ambient (θ_{JA}) value reports the temperature difference between the ambient environment and the junction temperature. The θ_{JA} value is reported at different air velocities, measured in linear feet per minute (LFM). The "Still Air (0 LFM)" column shows the θ_{JA} value in a system without a fan. The thermal resistance drops with increasing air flow.

Table 14: **Spartan-IIE Package Thermal Characteristics**

Package	Device	Junction-to-Case (θ_{JC})	Junction-to-Board (θ_{JB})	Junction-to-Ambient (θ_{JA}) at Different Air Flows				Units
				Still Air (0 LFM)	250 LFM	500 LFM	750 LFM	
TQ144 TQG144	XC2S50E	5.8	N/A	32.3	25.1	21.5	20.1	°C/Watt
	XC2S100E	5.3	N/A	31.4	24.4	20.8	19.6	°C/Watt
PQ208 PQG208	XC2S50E	7.1	N/A	35.1	25.9	22.9	21.2	°C/Watt
	XC2S100E	6.1	N/A	34.2	25.2	22.3	20.7	°C/Watt
	XC2S150E	6.0	N/A	34.1	25.2	22.2	20.6	°C/Watt
	XC2S200E	4.6	N/A	32.4	23.9	21.2	19.6	°C/Watt
	XC2S300E	4.0	N/A	31.6	23.3	20.6	19.1	°C/Watt
FT256 FTG256	XC2S50E	7.3	17.8	27.4	21.6	20.4	20.0	°C/Watt
	XC2S100E	5.8	15.1	25.0	19.5	18.2	17.8	°C/Watt
	XC2S150E	5.7	14.8	24.8	19.3	18.0	17.6	°C/Watt
	XC2S200E	3.9	11.4	21.9	16.6	15.2	14.7	°C/Watt
	XC2S300E	3.2	10.1	20.8	15.6	14.2	13.7	°C/Watt
	XC2S400E	2.5	8.8	19.7	14.5	13.2	12.6	°C/Watt
FG456 FGG456	XC2S100E	8.4	14.9	24.3	19.2	18.1	17.4	°C/Watt
	XC2S150E	8.2	14.6	24.1	19.0	17.9	17.1	°C/Watt
	XC2S200E	6.3	11.6	21.0	16.1	15.0	14.3	°C/Watt
	XC2S300E	5.6	10.4	19.9	15.1	13.9	13.2	°C/Watt
	XC2S400E	3.6	6.5	17.7	11.7	10.5	10.0	°C/Watt
	XC2S600E	2.7	5.0	17.3	11.2	10.0	9.5	°C/Watt
FG676 FGG676	XC2S400E	4.1	7.9	15.6	11.1	9.8	9.2	°C/Watt
	XC2S600E	3.4	6.9	14.5	9.9	8.6	7.9	°C/Watt

Low Voltage Differential Signals (LVDS and LVPECL)

The Spartan-IIE family features low-voltage differential signaling (LVDS and LVPECL). Each signal utilizes two pins on the Spartan-IIE device, known as differential pin pairs. Each differential pin pair has a Positive (P) and a Negative (N) pin. These pairs are labeled in the following manner.

I/O, L#[P/N][-/_Y/_YY]

where

L = LVDS or LVPECL pin

= Pin pair number

P = Positive

N = Negative

_Y = Asynchronous output allowed (device-dependent)

_YY = Asynchronous output allowed (all devices)

Available Differential Pairs According to Package Type

Device	TQ144	PQ208	FT256	FG456	FG676
XC2S50E	28	50	83	-	-
XC2S100E	28	50	83	86	-
XC2S150E	-	50	83	114	-
XC2S200E	-	50	83	120	-
XC2S300E	-	50	83	120	-
XC2S400E	-	-	83	120	172
XC2S600E	-	-	-	120	205

Synchronous or Asynchronous

I/O pins for differential signals can either be synchronous or asynchronous, input or output. Differential signaling requires the pins of each pair to switch simultaneously. If the output signals driving the pins are from IOB flip-flops, they are synchronous. If the signals driving the pins are from internal logic, they are asynchronous, and therefore more care must be taken that they are simultaneous. Any differential pairs can be used for synchronous input and output signals as well as asynchronous input signals.

However, only the differential pairs with the _Y or _YY suffix can be used for asynchronous output signals.

Asynchronous Output Pad Name Designation

Because of differences between densities, the differential pairs that can be used for asynchronous outputs vary by device. The pairs that are available in all densities for a given package have the _YY suffix. These pins should be used for differential asynchronous outputs if the design may later move to a different density. All other differential pairs that can be used for asynchronous outputs have the _Y suffix.

To simplify the following tables, the "Pad Name" column shows the part of the name that is common across densities. The "Pad Name" column leaves out the _Y suffix and the "LVDS Asynchronous Output Option" column indicates the densities that allow asynchronous outputs for LVDS or LVPECL on the given pin.

DLL Pins

Pins labeled "I/O (DLL)" can be used as general-purpose I/O or as inputs to the DLL. Adjacent DLL pins form a differential pair. They reside in two different banks, so if they are outputs the V_{CCO} level must be the same for both banks. Each DLL pin can also be paired with the adjacent GCK clock pin for a differential clock input. The "I/O (DLL)" pin always becomes the N terminal when paired with GCK, even if it is labeled "P" for its pairing with the adjacent DLL pin.

VREF Pins

Pins labeled "I/O, VREF" can be used as either an I/O or a VREF pin. If any I/O pin within the bank requires a VREF input, all the VREF pins in the bank must be connected to the same voltage. See the I/O banking rules in the Functional Description module for more detail. If no pin in a given bank requires VREF, then that bank's VREF pins can be used as general I/O.

To simplify the following tables, the "Pad Name" column shows the part of the name that is common across densities. When VREF is only available in limited densities, the "Pad Name" column leaves out the VREF designation and the "VREF Option" column indicates the densities that provide VREF on the given pin.

VCCO Banks

In the TQ144 and PQ208 packages, the eight banks have VCCO connected together. Thus, only one VCCO is allowed in these packages, although different VREF values are allowed in each of the eight banks. See I/O Banking.

Pinout Tables

The following device-specific pinout tables include all packages available for each Spartan-IIE device. They follow the pad locations around the die. In the TQ144 package, all VCCO pins must be connected to the same voltage.

TQ144 Pinouts (XC2S50E and XC2S100E)

Pad Name		Pin	LVDS Async. Output Option	V_{REF} Option
Function	Bank			
GND	-	P1	-	-
TMS	-	P2	-	-
I/O	7	P3	-	-
I/O	7	P4	-	-
I/O, VREF Bank 7	7	P5	-	All
I/O	7	P6	-	-
I/O, L27P	7	P7	XC2S50E	XC2S100E
I/O, L27N	7	P8	XC2S50E	-
GND	-	P9	-	-
I/O, L26P_YY	7	P10	All	-
I/O, L26N_YY	7	P11	All	-
I/O, VREF Bank 7, L25P	7	P12	XC2S50E	All
I/O, L25N	7	P13	XC2S50E	-
I/O	7	P14	-	-
I/O (IRDY)	7	P15	-	-
GND	-	P16	-	-
VCCO	-	P17	-	-
I/O (TRDY)	6	P18	-	-
VCCINT	-	P19	-	-
I/O	6	P20	-	-
I/O, L24P	6	P21	XC2S50E	-
I/O, VREF Bank 6, L24N	6	P22	XC2S50E	All
I/O, L23P_YY	6	P23	All	-
I/O, L23N_YY	6	P24	All	-
GND	-	P25	-	-
I/O, L22P	6	P26	XC2S50E	-

TQ144 Pinouts (XC2S50E and XC2S100E) *(Continued)*

Pad Name		Pin	LVDS Async. Output Option	V_{REF} Option
Function	Bank			
I/O, L22N	6	P27	XC2S50E	XC2S100E
I/O	6	P28	-	-
I/O, VREF Bank 6	6	P29	-	All
I/O	6	P30	-	-
I/O, L21P_YY	6	P31	All	-
I/O, L21N_YY	6	P32	All	-
M1	-	P33	-	-
GND	-	P34	-	-
M0	-	P35	-	-
VCCO	-	P36	-	-
M2	-	P37	-	-
I/O, L20N_YY	5	P38	All	-
I/O, L20P_YY	5	P39	All	-
I/O	5	P40	-	-
I/O, VREF Bank 5	5	P41	-	All
I/O	5	P42	-	-
I/O, L19N_YY	5	P43	All	XC2S100E
I/O, L19P_YY	5	P44	All	-
GND	-	P45	-	-
VCCINT	-	P46	-	-
I/O, L18N_YY	5	P47	All	-
I/O, L18P_YY	5	P48	All	-
I/O, VREF Bank 5	5	P49	-	All
I/O (DLL), L17N	5	P50	-	-
VCCINT	-	P51	-	-
GCK1, I	5	P52	-	-
VCCO	5	P53	-	-
GND	-	P54	-	-
GCK0, I	4	P55	-	-

TQ144 Pinouts (XC2S50E and XC2S100E) *(Continued)*

Pad Name			LVDS Async. Output Option	V_{REF} Option
Function	Bank	Pin		
I/O (DLL), L17P	4	P56	-	-
I/O	4	P57	-	-
I/O, VREF Bank 4	4	P58	-	All
I/O, L16N_YY	4	P59	All	-
I/O, L16P_YY	4	P60	All	-
VCCINT	-	P61	-	-
GND	-	P62	-	-
I/O, L15N_YY	4	P63	All	-
I/O, L15P_YY	4	P64	All	XC2S100E
I/O	4	P65	-	-
I/O, VREF Bank 4	4	P66	-	All
I/O	4	P67	-	-
I/O, L14N_YY	4	P68	All	-
I/O, L14P_YY	4	P69	All	-
GND	-	P70	-	-
DONE	3	P71	-	-
VCCO	-	P72	-	-
$\overline{\text{PROGRAM}}$	-	P73	-	-
I/O ($\overline{\text{INIT}}$), L13N_YY	3	P74	All	-
I/O (D7), L13P_YY	3	P75	All	-
I/O	3	P76	-	-
I/O, VREF Bank 3	3	P77	-	All
I/O	3	P78	-	-
I/O, L12N	3	P79	XC2S50E	XC2S100E
I/O (D6), L12P	3	P80	XC2S50E	-
GND	-	P81	-	-
I/O (D5), L11N_YY	3	P82	All	-
I/O, L11P_YY	3	P83	All	-
I/O	3	P84	-	-

TQ144 Pinouts (XC2S50E and XC2S100E) *(Continued)*

Pad Name			LVDS Async. Output Option	V_{REF} Option
Function	Bank	Pin		
I/O, VREF Bank 3, L10N	3	P85	XC2S50E	All
I/O (D4), L10P	3	P86	XC2S50E	-
I/O	3	P87	-	-
VCCINT	-	P88	-	-
I/O (TRDY)	3	P89	-	-
VCCO	-	P90	-	-
GND	-	P91	-	-
I/O (IRDY)	2	P92	-	-
I/O	2	P93	-	-
I/O (D3), L9N	2	P94	XC2S50E	-
I/O, VREF Bank 2, L9P	2	P95	XC2S50E	All
I/O	2	P96	-	-
I/O, L8N_YY	2	P97	All	-
I/O (D2), L8P_YY	2	P98	All	-
GND	-	P99	-	-
I/O (D1), L7N	2	P100	XC2S50E	-
I/O, L7P	2	P101	XC2S50E	XC2S100E
I/O	2	P102	-	-
I/O, VREF Bank 2	2	P103	-	All
I/O	2	P104	-	-
I/O (DIN, D0), L6N_YY	2	P105	All	-
I/O (DOUT, BUSY), L6P_YY	2	P106	All	-
CCLK	2	P107	-	-
VCCO	-	P108	-	-
TDO	2	P109	-	-
GND	-	P110	-	-
TDI	-	P111	-	-

TQ144 Pinouts (XC2S50E and XC2S100E) *(Continued)*

Pad Name			LVDS Async. Output Option	V_{REF} Option
Function	Bank	Pin		
I/O ($\overline{CS}$), L5P_YY	1	P112	All	-
I/O ($\overline{WRITE}$), L5N_YY	1	P113	All	-
I/O	1	P114	-	-
I/O, VREF Bank 1	1	P115	-	All
I/O	1	P116	-	-
I/O, L4P_YY	1	P117	All	XC2S100E
I/O, L4N_YY	1	P118	All	-
GND	-	P119	-	-
VCCINT	-	P120	-	-
I/O, L3P_YY	1	P121	All	-
I/O, L3N_YY	1	P122	All	-
I/O, VREF Bank 1	1	P123	-	All
I/O	1	P124	-	-
I/O (DLL), L2P	1	P125	-	-
GCK2, I	1	P126	-	-
GND	-	P127	-	-
VCCO	-	P128	-	-
GCK3, I	0	P129	-	-
VCCINT	-	P130	-	-
I/O (DLL), L2N	0	P131	-	-
I/O, VREF Bank 0	0	P132	-	All
I/O, L1P_YY	0	P133	All	-
I/O, L1N_YY	0	P134	All	-
VCCINT	-	P135	-	-
GND	-	P136	-	-
I/O, L0P_YY	0	P137	All	-
I/O, L0N_YY	0	P138	All	XC2S100E

TQ144 Pinouts (XC2S50E and XC2S100E) *(Continued)*

Pad Name			LVDS Async. Output Option	V_{REF} Option
Function	Bank	Pin		
I/O	0	P139	-	-
I/O, VREF Bank 0	0	P140	-	All
I/O	0	P141	-	-
I/O	0	P142	-	-
TCK	-	P143	-	-
VCCO	-	P144	-	-

TQ144 Differential Clock Pins

		P		N	
Clock	Bank	Pin	Name	Pin	Name
GCK0	4	P55	GCK0, I	P56	I/O (DLL), L17P
GCK1	5	P52	GCK1, I	P50	I/O (DLL), L17N
GCK2	1	P126	GCK2, I	P125	I/O (DLL), L2P
GCK3	0	P129	GCK3, I	P131	I/O (DLL), L2N

In the PQ208 package, all VCCO pins must be connected to the same voltage.

PQ208 Pinouts (XC2S50E, XC2S100E, XC2S150E, XC2S200E, XC2S300E)

Pad Name			LVDS Async. Output Option	V_{REF} Option
Function	Bank	Pin		
GND	-	P1	-	-
TMS	-	P2	-	-
I/O	7	P3	-	-
I/O	7	P4	-	XC2S200E, 300E
I/O	7	P5	-	-
I/O, VREF Bank 7, L49P	7	P6	XC2S50E, 150E, 200E, 300E	All
I/O, L49N	7	P7	XC2S50E, 150E, 200E, 300E	-
I/O	7	P8	-	-
I/O	7	P9	-	-
I/O, L48P	7	P10	XC2S50E, 300E	XC2S100E, 150E, 200E, 300E
I/O, L48N	7	P11	XC2S50E, 300E	-
GND	-	P12	-	-
VCCO	-	P13	-	-
VCCINT	-	P14	-	-
I/O, L47P_YY	7	P15	All	-
I/O, L47N_YY	7	P16	All	-
I/O, L46P_YY	7	P17	All	-
I/O, L46N_YY	7	P18	All	-
GND	-	P19	-	-
I/O, VREF Bank 7, L45P	7	P20	XC2S50E, 300E	All
I/O, L45N	7	P21	XC2S50E, 300E	-

PQ208 Pinouts (XC2S50E, XC2S100E, XC2S150E, XC2S200E, XC2S300E)

Pad Name			LVDS Async. Output Option	V_{REF} Option
Function	Bank	Pin		
I/O	7	P22	-	-
I/O, L44P_YY	7	P23	All	-
I/O (IRDY), L44N_YY	7	P24	All	-
GND	-	P25	-	-
VCCO	-	P26	-	-
I/O (TRDY)	6	P27	-	-
VCCINT	-	P28	-	-
I/O	6	P29	-	-
I/O, L43P	6	P30	XC2S50E, 300E	-
I/O, VREF Bank 6, L43N	6	P31	XC2S50E, 300E	All
GND	-	P32	-	-
I/O, L42P_YY	6	P33	All	-
I/O, L42N_YY	6	P34	All	-
I/O, L41P_YY	6	P35	All	-
I/O, L41N_YY	6	P36	All	-
VCCINT	-	P37	-	-
VCCO	-	P38	-	-
GND	-	P39	-	-
I/O, L40P	6	P40	XC2S50E, 300E	-
I/O, L40N	6	P41	XC2S50E, 300E	XC2S100E, 150E, 200E, 300E
I/O	6	P42	-	-
I/O	6	P43	-	-
I/O	6	P44	-	-

PQ208 Pinouts (XC2S50E, XC2S100E, XC2S150E, XC2S200E, XC2S300E)

Pad Name			LVDS Async. Output Option	V_{REF} Option
Function	Bank	Pin		
I/O, VREF Bank 6, L39P	6	P45	XC2S100E, 150E	All
I/O, L39N	6	P46	XC2S100E, 150E	-
I/O	6	P47	-	XC2S200E, 300E
I/O, L38P_YY	6	P48	All	-
I/O, L38N_YY	6	P49	All	-
M1	-	P50	-	-
GND	-	P51	-	-
M0	-	P52	-	-
VCCO	-	P53	-	-
M2	-	P54	-	-
I/O, L37N_YY	5	P55	All	-
I/O, L37P_YY	5	P56	All	-
I/O	5	P57	-	XC2S200E, 300E
I/O	5	P58	-	-
I/O, VREF Bank 5, L36N_YY	5	P59	All	All
I/O, L36P_YY	5	P60	All	-
I/O, L35N	5	P61	XC2S50E, 100E, 300E	-
I/O, L35P	5	P62	XC2S50E, 100E, 300E	-
I/O, L34N	5	P63	XC2S50E, 100E, 200E, 300E	XC2S100E, 150E, 200E, 300E
I/O, L34P	5	P64	XC2S50E, 100E, 200E, 300E	-
GND	-	P65	-	-

PQ208 Pinouts (XC2S50E, XC2S100E, XC2S150E, XC2S200E, XC2S300E)

Pad Name			LVDS Async. Output Option	V_{REF} Option
Function	Bank	Pin		
VCCO	-	P66	-	-
VCCINT	-	P67	-	-
I/O, L33N	5	P68	XC2S50E, 100E, 200E, 300E	-
I/O, L33P	5	P69	XC2S50E, 100E, 200E, 300E	-
I/O	5	P70	-	-
I/O, L32N	5	P71	XC2S100E, 150E	-
GND	-	P72	-	-
I/O, VREF Bank 5, L32P	5	P73	XC2S100E, 150E	All
I/O	5	P74	-	-
I/O (DLL), L31N	5	P75	-	-
VCCINT	-	P76	-	-
GCK1, I	5	P77	-	-
VCCO	-	P78	-	-
GND	-	P79	-	-
GCK0, I	4	P80	-	-
I/O (DLL), L31P	4	P81	-	-
I/O	4	P82	-	-
I/O, L30N	4	P83	XC2S50E, 200E, 300E	-
I/O, VREF Bank 4, L30P	4	P84	XC2S50E, 200E, 300E	All
GND	-	P85	-	-
I/O, L29N	4	P86	XC2S50E, 200E, 300E	-
I/O, L29P	4	P87	XC2S50E, 200E, 300E	-
I/O, L28N	4	P88	XC2S50E, 100E, 200E, 300E	-

PQ208 Pinouts (XC2S50E, XC2S100E, XC2S150E, XC2S200E, XC2S300E)

Pad Name			LVDS Async. Output Option	V_{REF} Option
Function	Bank	Pin		
I/O, L28P	4	P89	XC2S50E, 100E, 200E, 300E	-
VCCINT	-	P90	-	-
VCCO	-	P91	-	-
GND	-	P92	-	-
I/O, L27N	4	P93	XC2S50E, 100E, 200E, 300E	-
I/O, L27P	4	P94	XC2S50E, 100E, 200E, 300E	XC2S100E, 150E, 200E, 300E
I/O	4	P95	-	-
I/O	4	P96	-	-
I/O, L26N_YY	4	P97	All	-
I/O, VREF Bank 4, L26P_YY	4	P98	All	All
I/O	4	P99	-	-
I/O	4	P100	-	XC2S200E, 300E
I/O, L25N_YY	4	P101	All	-
I/O, L25P_YY	4	P102	All	-
GND	-	P103	-	-
DONE	3	P104	-	-
VCCO	-	P105	-	-
$\overline{\text{PROGRAM}}$	-	P106	-	-
I/O ($\overline{\text{INIT}}$), L24N_YY	3	P107	All	-
I/O (D7), L24P_YY	3	P108	All	-
I/O	3	P109	-	XC2S200E, 300E
I/O	3	P110	-	-

PQ208 Pinouts (XC2S50E, XC2S100E, XC2S150E, XC2S200E, XC2S300E)

Pad Name			LVDS Async. Output Option	V_{REF} Option
Function	Bank	Pin		
I/O, VREF Bank 3, L23N	3	P111	XC2S50E, 150E, 200E, 300E	All
I/O, L23P	3	P112	XC2S50E, 150E, 200E, 300E	-
I/O	3	P113	-	-
I/O	3	P114	-	-
I/O, L22N	3	P115	XC2S50E, 300E	XC2S100E, 150E, 200E, 300E
I/O (D6), L22P	3	P116	XC2S50E, 300E	-
GND	-	P117	-	-
VCCO	-	P118	-	-
VCCINT	-	P119	-	-
I/O (D5), L21N_YY	3	P120	All	-
I/O, L21P_YY	3	P121	All	-
I/O, L20N_YY	3	P122	All	-
I/O, L20P_YY	3	P123	All	-
GND	-	P124	-	-
I/O, VREF Bank 3, L19N	3	P125	XC2S50E, 300E	All
I/O (D4), L19P	3	P126	XC2S50E, 300E	-
I/O	3	P127	-	-
VCCINT	-	P128	-	-
I/O (TRDY)	3	P129	-	-
VCCO	-	P130	-	-
GND	-	P131	-	-
I/O (IRDY), L18N_YY	2	P132	All	-
I/O, L18P_YY	2	P133	All	-

PQ208 Pinouts (XC2S50E, XC2S100E, XC2S150E, XC2S200E, XC2S300E)

Pad Name			LVDS Async. Output Option	V_{REF} Option
Function	Bank	Pin		
I/O	2	P134	-	-
I/O (D3), L17N	2	P135	XC2S50E, 300E	-
I/O, VREF Bank 2, L17P	2	P136	XC2S50E, 300E	All
GND	-	P137	-	-
I/O, L16N_YY	2	P138	All	-
I/O, L16P_YY	2	P139	All	-
I/O, L15N_YY	2	P140	All	-
I/O (D2), L15P_YY	2	P141	All	-
VCCINT	-	P142	-	-
VCCO	-	P143	-	-
GND	-	P144	-	-
I/O (D1), L14N	2	P145	XC2S50E, 300E	-
I/O, L14P	2	P146	XC2S50E, 300E	XC2S100E, 150E, 200E, 300E
I/O	2	P147	-	-
I/O	2	P148	-	-
I/O	2	P149	-	-
I/O, VREF Bank 2, L13N	2	P150	XC2S100E, 150E	All
I/O, L13P	2	P151	XC2S100E, 150E	-
I/O	2	P152	-	XC2S200E, 300E
I/O (DIN, D0), L12N_YY	2	P153	All	-
I/O (DOUT, BUSY), L12P_YY	2	P154	All	-
CCLK	2	P155	-	-

PQ208 Pinouts (XC2S50E, XC2S100E, XC2S150E, XC2S200E, XC2S300E)

Pad Name			LVDS Async. Output Option	V_{REF} Option
Function	Bank	Pin		
VCCO	-	P156	-	-
TDO	2	P157	-	-
GND	-	P158	-	-
TDI	-	P159	-	-
I/O ($\overline{CS}$), L11P_YY	1	P160	All	-
I/O ($\overline{WRITE}$), L11N_YY	1	P161	All	-
I/O	1	P162	-	XC2S200E, 300E
I/O	1	P163	-	-
I/O, VREF Bank 1, L10P_YY	1	P164	All	All
I/O, L10N_YY	1	P165	All	-
I/O	1	P166	-	-
I/O	1	P167	-	-
I/O, L9P	1	P168	XC2S50E, 100E, 200E, 300E	XC2S100E, 150E, 200E, 300E
I/O, L9N	1	P169	XC2S50E, 100E, 200E, 300E	-
GND	-	P170	-	-
VCCO	-	P171	-	-
VCCINT	-	P172	-	-
I/O, L8P	1	P173	XC2S50E, 100E, 200E, 300E	-
I/O, L8N	1	P174	XC2S50E, 100E, 200E, 300E	-
I/O, L7P	1	P175	XC2S50E, 200E, 300E	-
I/O, L7N	1	P176	XC2S50E, 200E, 300E	-
GND	-	P177	-	-

PQ208 Pinouts (XC2S50E, XC2S100E, XC2S150E, XC2S200E, XC2S300E)

Pad Name			LVDS Async. Output Option	V_{REF} Option
Function	Bank	Pin		
I/O, VREF Bank 1, L6P	1	P178	XC2S50E, 200E, 300E	All
I/O, L6N	1	P179	XC2S50E, 200E, 300E	-
I/O	1	P180	-	-
I/O (DLL), L5P	1	P181	-	-
GCK2, I	1	P182	-	-
GND	-	P183	-	-
VCCO	-	P184	-	-
GCK3, I	0	P185	-	-
VCCINT	-	P186	-	-
I/O (DLL), L5N	0	P187	-	-
I/O, L4P	0	P188	XC2S50E, 200E, 300E	-
I/O, VREF Bank 0, L4N	0	P189	XC2S50E, 200E, 300E	All
GND	-	P190	-	-
I/O, L3P	0	P191	XC2S50E, 200E, 300E	-
I/O, L3N	0	P192	XC2S50E, 200E, 300E	-
I/O, L2P	0	P193	XC2S50E, 100E, 200E, 300E	-
I/O, L2N	0	P194	XC2S50E, 100E, 200E, 300E	-
VCCINT	-	P195	-	-
VCCO	-	P196	-	-
GND	-	P197	-	-
I/O, L1P	0	P198	XC2S50E, 100E, 200E, 300E	-
I/O, L1N	0	P199	XC2S50E, 100E, 200E, 300E	XC2S100E, 150E, 200E, 300E
I/O	0	P200	-	-

PQ208 Pinouts (XC2S50E, XC2S100E, XC2S150E, XC2S200E, XC2S300E)

Pad Name			LVDS Async. Output Option	V_{REF} Option
Function	Bank	Pin		
I/O	0	P201	-	-
I/O, L0P_YY	0	P202	All	-
I/O, VREF Bank 0, L0N_YY	0	P203	All	All
I/O	0	P204	-	-
I/O	0	P205	-	XC2S200E, 300E
I/O	0	P206	-	-
TCK	-	P207	-	-
VCCO	-	P208	-	-

PQ208 Differential Clock Pins

Clock	Bank	P		N	
		Pin	Name	Pin	Name
GCK0	4	P80	GCK0, I	P81	I/O (DLL), L31P
GCK1	5	P77	GCK1, I	P75	I/O (DLL), L31N
GCK2	1	P182	GCK2, I	P181	I/O (DLL), L5P
GCK3	0	P185	GCK3, I	P187	I/O (DLL), L5N

FT256 Pinouts (XC2S50E, XC2S100E, XC2S150E, XC2S200E, XC2S300E, XC2S400E)

Pad Name			LVDS Async. Output Option	V_{REF} Option
Function	Bank	Pin		
TMS	-	B1	-	-
I/O	7	D3	-	-
I/O, L83P	7	C2	XC2S100E, 150E	-
I/O, L83N	7	C1	XC2S100E, 150E	XC2S200E, 300E, 400E
I/O, L82P_YY	7	D2	All	-
I/O, L82N_YY	7	D1	All	-
I/O, VREF Bank 7, L81P	7	E3	XC2S50E, 150E, 200E, 300E, 400E	All
I/O, L81N	7	E4	XC2S50E, 150E, 200E, 300E, 400E	-
I/O, L80P	7	E2	XC2S200E, 400E	-
I/O, L80N	7	E1	XC2S200E, 400E	-
I/O, L79P	7	F4	XC2S50E, 300E, 400E	XC2S100E, 150E, 200E, 300E, 400E
I/O, L79N	7	F3	XC2S50E, 300E, 400E	-
I/O, L78P_YY	7	F2	All	-
I/O, L78N_YY	7	F1	All	-
I/O, L77P	7	F5	XC2S100E, 150E	-
I/O, L77N	7	G5	XC2S100E, 150E	-
I/O, L76P_YY	7	G3	All	-
I/O, L76N_YY	7	G4	All	-
I/O, VREF Bank 7, L75P	7	G2	XC2S50E, 300E, 400E	All
I/O, L75N	7	G1	XC2S50E, 300E, 400E	-

FT256 Pinouts (XC2S50E, XC2S100E, XC2S150E, XC2S200E, XC2S300E, XC2S400E) *(Continued)*

Pad Name			LVDS Async. Output Option	V_{REF} Option
Function	Bank	Pin		
I/O, L74P	7	H4	XC2S100E, 150E, 200E	-
I/O, L74N	7	H3	XC2S100E, 150E, 200E	XC2S400E
I/O, L73P_YY	7	H2	All	-
I/O (IRDY), L73N_YY	7	H1	All	-
I/O (TRDY)	6	J4	-	-
I/O, L72P	6	J2	XC2S100E, 150E, 200E, 400E	XC2S400E
I/O, L72N	6	J3	XC2S100E, 150E, 200E, 400E	-
I/O, L71P	6	J1	XC2S50E, 300E, 400E	-
I/O, VREF Bank 6, L71N	6	K1	XC2S50E, 300E, 400E	All
I/O, L70P_YY	6	K2	All	-
I/O, L70N_YY	6	K3	All	-
I/O, L69P	6	L1	XC2S100E, 150E, 400E	-
I/O, L69N	6	L2	XC2S100E, 150E, 400E	-
I/O, L68P_YY	6	K4	All	-
I/O, L68N_YY	6	K5	All	-
I/O, L67P	6	L3	XC2S50E, 300E, 400E	-
I/O, L67N	6	M2	XC2S50E, 300E, 400E	XC2S100E, 150E, 200E, 300E, 400E
I/O, L66P	6	M1	XC2S150E, 200E, 400E	-
I/O, L66N	6	N1	XC2S150E, 200E, 400E	-

FT256 Pinouts (XC2S50E, XC2S100E, XC2S150E, XC2S200E, XC2S300E, XC2S400E) *(Continued)*

Pad Name			LVDS Async. Output Option	V_{REF} Option
Function	Bank	Pin		
I/O, L65P	6	L4	XC2S50E, 150E, 200E, 300E, 400E	-
I/O, VREF Bank 6, L65N	6	L5	XC2S50E, 150E, 200E, 300E, 400E	All
I/O, L64P_YY	6	M3	All	-
I/O, L64N_YY	6	M4	All	-
I/O, L63P	6	N2	XC2S100E, 200E, 300E	-
I/O, L63N	6	N3	XC2S100E, 200E, 300E	XC2S200E, 300E, 400E
I/O, L62P_YY	6	P1	All	-
I/O, L62N_YY	6	P2	All	-
M1	-	R1	-	-
M0	-	T2	-	-
M2	-	R3	-	-
I/O, L61N_YY	5	P4	All	-
I/O, L61P_YY	5	R4	All	-
I/O, L60N	5	T3	XC2S50E, 100E, 200E, 300E, 400E	XC2S200E, 300E, 400E
I/O, L60P	5	T4	XC2S50E, 100E, 200E, 300E, 400E	-
I/O, L59N_YY	5	N5	All	-
I/O, L59P_YY	5	P5	All	-
I/O, VREF Bank 5, L58N_YY	5	R5	All	All
I/O, L58P_YY	5	T5	All	-
I/O, L57N	5	N6	XC2S50E, 100E, 150E, 300E	-

FT256 Pinouts (XC2S50E, XC2S100E, XC2S150E, XC2S200E, XC2S300E, XC2S400E) *(Continued)*

Pad Name			LVDS Async. Output Option	V_{REF} Option
Function	Bank	Pin		
I/O, L57P	5	P6	XC2S50E, 100E, 150E, 300E	-
I/O, L56N	5	R6	XC2S50E, 100E, 200E, 300E, 400E	XC2S100E, 150E, 200E, 300E, 400E
I/O, L56P	5	T6	XC2S50E, 100E, 200E, 300E, 400E	-
I/O, L55N	5	M6	XC2S50E, 100E, 200E, 300E, 400E	-
I/O, L55P	5	N7	XC2S50E, 100E, 200E, 300E, 400E	-
I/O	5	P7	-	-
I/O, L54N	5	R7	XC2S50E, 200E, 300E, 400E	-
I/O, L54P	5	T7	XC2S50E, 200E, 300E, 400E	-
I/O, VREF Bank 5, L53N	5	M7	XC2S50E, 200E, 300E, 400E	All
I/O, L53P	5	N8	XC2S50E, 200E, 300E, 400E	-
I/O	5	P8	-	XC2S400E
I/O (DLL), L52N	5	R8	-	-
GCK1, I	5	T8	-	-
GCK0, I	4	T9	-	-
I/O (DLL), L52P	4	R9	-	-
I/O, L51N	4	P9	XC2S50E, 150E, 200E, 400E	XC2S400E

FT256 Pinouts (XC2S50E, XC2S100E, XC2S150E, XC2S200E, XC2S300E, XC2S400E) *(Continued)*

Pad Name			LVDS Async. Output Option	V_{REF} Option
Function	Bank	Pin		
I/O, L51P	4	N9	XC2S50E, 150E, 200E, 400E	-
I/O, L50N	4	T10	XC2S50E, 200E, 300E, 400E	-
I/O, VREF Bank 4, L50P	4	R10	XC2S50E, 200E, 300E, 400E	All
I/O, L49N	4	P10	XC2S50E, 200E, 300E, 400E	-
I/O, L49P	4	R11	XC2S50E, 200E, 300E, 400E	-
I/O	4	T11	-	-
I/O, L48N	4	N10	XC2S50E, 100E, 200E, 300E, 400E	-
I/O, L48P	4	M10	XC2S50E, 100E, 200E, 300E, 400E	-
I/O, L47N	4	P11	XC2S50E, 100E, 200E, 300E, 400E	-
I/O, L47P	4	R12	XC2S50E, 100E, 200E, 300E, 400E	XC2S100E, 150E, 200E, 300E, 400E
I/O, L46N	4	T12	XC2S50E, 100E, 150E, 300E	-
I/O, L46P	4	T13	XC2S50E, 100E, 150E, 300E	-
I/O, L45N_YY	4	N11	All	-
I/O, VREF Bank 4, L45P_YY	4	M11	All	All
I/O, L44N_YY	4	P12	All	-
I/O, L44P_YY	4	N12	All	-

FT256 Pinouts (XC2S50E, XC2S100E, XC2S150E, XC2S200E, XC2S300E, XC2S400E) *(Continued)*

Pad Name			LVDS Async. Output Option	V_{REF} Option
Function	Bank	Pin		
I/O, L43N	4	R13	XC2S50E, 150E	XC2S200E, 300E, 400E
I/O, L43P	4	P13	XC2S50E, 150E	-
I/O, L42N_YY	4	T14	All	-
I/O, L42P_YY	4	R14	All	-
DONE	3	T15	-	-
$\overline{\text{PROGRAM}}$	-	R16	-	-
I/O ($\overline{\text{INIT}}$), L41N_YY	3	P15	All	-
I/O (D7), L41P_YY	3	P16	All	-
I/O, L40N	3	N15	XC2S100E, 150E, 400E	-
I/O, L40P	3	N16	XC2S100E, 150E, 400E	XC2S200E, 300E, 400E
I/O, L39N	3	N14	XC2S50E, 100E, 150E, 200E, 300E(1)	-
I/O, L39P	3	M14	XC2S50E, 100E, 150E, 200E, 300E(1)	-
I/O, VREF Bank 3, L38N	3	M15	XC2S50E, 150E, 200E, 300E, 400E	All
I/O, L38P	3	M16	XC2S50E, 150E, 200E, 300E, 400E	-
I/O(2)	3	M13	-	-
I/O(2)	3	L14	-	-
I/O, L36N	3	L15	XC2S50E, 300E, 400E	XC2S100E, 150E, 200E, 300E, 400E
I/O (D6), L36P	3	L16	XC2S50E, 300E, 400E	-

FT256 Pinouts (XC2S50E, XC2S100E, XC2S150E, XC2S200E, XC2S300E, XC2S400E) *(Continued)*

Pad Name			LVDS Async. Output Option	V_{REF} Option
Function	Bank	Pin		
I/O (D5), L35N_YY	3	L13	All	-
I/O, L35P_YY	3	K14	All	-
I/O, L34N	3	K15	XC2S100E, 150E, 400E	-
I/O, L34P	3	K16	XC2S100E, 150E, 400E	-
I/O, L33N	3	L12	XC2S50E, 100E, 150E, 200E, 300E(1)	-
I/O, L33P	3	K12	XC2S50E, 100E, 150E, 200E, 300E(1)	-
I/O, VREF Bank 3, L32N	3	K13	XC2S50E, 300E, 400E	All
I/O (D4), L32P	3	J14	XC2S50E, 300E, 400E	-
I/O, L31N	3	J15	XC2S100E, 150E, 200E, 400E	-
I/O, L31P	3	J16	XC2S100E, 150E, 200E, 400E	XC2S400E
I/O (TRDY)	3	J13	-	-
I/O (IRDY), L30N_YY	2	H16	All	-
I/O, L30P_YY	2	G16	All	-
I/O, L29N	2	H14	XC2S100E, 150E, 200E, 400E	XC2S400E
I/O, L29P	2	H15	XC2S100E, 150E, 200E, 400E	-
I/O (D3), L28N	2	G15	XC2S50E, 300E, 400E	-

FT256 Pinouts (XC2S50E, XC2S100E, XC2S150E, XC2S200E, XC2S300E, XC2S400E) *(Continued)*

Pad Name			LVDS Async. Output Option	V_{REF} Option
Function	Bank	Pin		
I/O, VREF Bank 2, L28P	2	F16	XC2S50E, 300E, 400E	All
I/O, L27N	2	H13	XC2S50E, 100E, 150E, 200E, 300E(1)	-
I/O, L27P	2	G14	XC2S50E, 100E, 150E, 200E, 300E(2)	-
I/O, L26N	2	F15	XC2S100E, 150E, 400E	-
I/O, L26P	2	E16	XC2S100E, 150E, 400E	-
I/O, L25N_YY	2	G13	All	-
I/O (D2), L25P_YY	2	F14	All	-
I/O (D1), L24N	2	E15	XC2S50E, 300E, 400E	-
I/O, L24P	2	D16	XC2S50E, 300E, 400E	XC2S100E, 150E, 200E, 300E, 400E
I/O, L23N	2	F13	XC2S150E, 200E, 400E	-
I/O, L23P	2	E14	XC2S150E, 200E, 400E	-
I/O, L22N	2	D15	XC2S50E, 150E, 200E, 300E, 400E	-
I/O, VREF Bank 2, L22P	2	C16	XC2S50E, 150E, 200E, 300E, 400E	All
I/O, L21N	2	G12	XC2S50E, 100E, 200E, 300E	-
I/O, L21P	2	F12	XC2S50E, 100E, 200E, 300E	-
I/O, L20N	2	E13	XC2S100E, 200E, 300E	-

FT256 Pinouts (XC2S50E, XC2S100E, XC2S150E, XC2S200E, XC2S300E, XC2S400E) *(Continued)*

Pad Name			LVDS Async. Output Option	V_{REF} Option
Function	Bank	Pin		
I/O, L20P	2	D14	XC2S100E, 200E, 300E	XC2S200E, 300E, 400E
I/O (DIN, D0), L19N_YY	2	B16	All	-
I/O (DOUT, BUSY), L19P_YY	2	C15	All	-
CCLK	2	A15	-	-
TDO	2	B14	-	-
TDI	-	C13	-	-
I/O ($\overline{CS}$), L18P_YY	1	A14	All	-
I/O ($\overline{WRITE}$), L18N_YY	1	A13	All	-
I/O, L17P	1	B13	XC2S50E, 100E, 200E, 300E, 400E	XC2S200E, 300E, 400E
I/O, L17N	1	C12	XC2S50E, 100E, 200E, 300E, 400E	-
I/O, L16P_YY	1	B12	All	-
I/O, L16N_YY	1	A12	All	-
I/O, VREF Bank 1, L15P_YY	1	D12	All	All
I/O, L15N_YY	1	E11	All	-
I/O, L14P	1	D11	XC2S50E, 100E, 150E, 300E	-
I/O, L14N	1	C11	XC2S50E, 100E, 150E, 300E	-
I/O, L13P	1	B11	XC2S50E, 100E, 200E, 300E, 400E	XC2S100E, 150E, 200E, 300E, 400E
I/O, L13N	1	A11	XC2S50E, 100E, 200E, 300E, 400E	-

FT256 Pinouts (XC2S50E, XC2S100E, XC2S150E, XC2S200E, XC2S300E, XC2S400E) *(Continued)*

Pad Name			LVDS Async. Output Option	V_{REF} Option
Function	Bank	Pin		
I/O, L12P	1	E10	XC2S50E, 100E, 200E, 300E, 400E	-
I/O, L12N	1	D10	XC2S50E, 100E, 200E, 300E, 400E	-
I/O	1	C10	-	-
I/O, L11P	1	B10	XC2S50E, 200E, 300E, 400E	-
I/O, L11N	1	A10	XC2S50E, 200E, 300E, 400E	-
I/O, VREF Bank 1, L10P	1	D9	XC2S50E, 200E, 300E, 400E	All
I/O, L10N	1	C9	XC2S50E, 200E, 300E, 400E	-
I/O, L9P	1	B9	XC2S50E, 150E, 200E, 400E	-
I/O, L9N	1	A9	XC2S50E, 150E, 200E, 400E	XC2S400E
I/O (DLL), L8P	1	A8	-	-
GCK2, I	1	B8	-	-
GCK3, I	0	C8	-	-
I/O (DLL), L8N	0	D8	-	-
I/O	0	A7	-	XC2S400E
I/O, L7P	0	E7	XC2S50E, 200E, 300E, 400E	-
I/O, VREF Bank 0, L7N	0	D7	XC2S50E, 200E, 300E, 400E	All

FT256 Pinouts (XC2S50E, XC2S100E, XC2S150E, XC2S200E, XC2S300E, XC2S400E) *(Continued)*

Pad Name			LVDS Async. Output Option	V_{REF} Option
Function	Bank	Pin		
I/O, L6P	0	C7	XC2S50E, 200E, 300E, 400E	-
I/O, L6N	0	B7	XC2S50E, 200E, 300E, 400E	-
I/O	0	A6	-	-
I/O, L5P	0	B6	XC2S50E, 100E, 200E, 300E, 400E	-
I/O, L5N	0	C6	XC2S50E, 100E, 200E, 300E, 400E	-
I/O, L4P	0	A5	XC2S50E, 100E, 200E, 300E, 400E	-
I/O, L4N	0	B5	XC2S50E, 100E, 200E, 300E, 400E	XC2S100E, 150E, 200E, 300E, 400E
I/O, L3P	0	D6	XC2S50E, 100E, 300E	-
I/O, L3N	0	E6	XC2S50E, 100E, 300E	-
I/O, L2P_YY	0	D5	All	-
I/O, VREF Bank 0, L2N_YY	0	C5	All	All
I/O, L1P_YY	0	B4	All	-
I/O, L1N_YY	0	C4	All	-
I/O, L0P_YY	0	A4	All	-
I/O, L0N_YY	0	A3	All	XC2S200E, 300E, 400E
I/O	0	B3	-	-
TCK	-	A2	-	-

Notes:
1. Although designated with the _YY suffix in the XC2S50E, XC2S100E, XC2S150E, XC2S200E, and XC2S300E, these differential pairs are not asynchronous in the XC2S400E.
2. There is no pair L37.

FT256 Differential Clock Pins

Clock	Bank	P		N	
		Pin	Name	Pin	Name
GCK0	4	T9	GCK0, I	R9	I/O (DLL), L52P
GCK1	5	T8	GCK1, I	R8	I/O (DLL), L52N
GCK2	1	B8	GCK2, I	A8	I/O (DLL), L8P
GCK3	0	C8	GCK3, I	D8	I/O (DLL), L8N

Additional FT256 Package Pins

VCCINT Pins				
C3	C14	D4	D13	E5
E12	M5	M12	N4	N13
P3	P14	-	-	-
VCCO Bank 0 Pins				
E8	F7	F8	-	-
VCCO Bank 1 Pins				
E9	F9	F10	-	-
VCCO Bank 2 Pins				
G11	H11	H12	-	-
VCCO Bank 3 Pins				
J11	J12	K11	-	-
VCCO Bank 4 Pins				
L9	L10	M9	-	-

Additional FT256 Package Pins *(Continued)*

VCCO Bank 5 Pins				
L7	L8	M8	-	-
VCCO Bank 6 Pins				
J5	J6	K6	-	-
VCCO Bank 7 Pins				
G6	H5	H6	-	-
GND Pins				
A1	A16	B2	B15	F6
F11	G7	G8	G9	G10
H7	H8	H9	H10	J7
J8	J9	J10	K7	K8
K9	K10	L6	L11	R2
R15	T1	T16	-	-

FG456 Pinouts (XC2S100E, XC2S150E, XC2S200E, XC2S300E, XC2S400E, XC2S600E)

Pad Name			LVDS Async. Output Option	V_{REF} Option	Device-Specific Pinouts: XC2S					
Function	Bank	Pin			100E	150E	200E	300E	400E	600E
TMS	-	E4	-	-	TMS	TMS	TMS	TMS	TMS	TMS
I/O	7	D3	XC2S150E	-	I/O	I/O, L113P_Y	I/O	I/O	I/O	I/O
I/O	7	C2	-	-	-	-	-	I/O	I/O	I/O
I/O	7	C1	XC2S150E	-	-	I/O, L113N_Y	I/O	I/O	I/O	I/O
I/O, L#P_Y	7	D2	XC2S150E, 200E, 300E, 400E	-	-	I/O, L112P_Y	I/O, L119P_Y	I/O, L119P_Y	I/O, L119P_Y	I/O, L119P
I/O, L#N_Y	7	D1	XC2S150E, 200E, 300E, 400E	-	I/O	I/O, L112N_Y	I/O, L119N_Y	I/O, L119N_Y	I/O, L119N_Y	I/O, L119N
I/O, L#P_Y	7	E2	XC2S100E, 200E, 300E, 600E	XC2S200E, 300E, 400E, 600E	I/O, L85P_Y	I/O, L111P	I/O, VREF Bank 7, L118P_Y	I/O, VREF Bank 7, L118P_Y	I/O, VREF Bank 7, L118P	I/O, VREF Bank 7, L118P_Y
I/O, L#N_Y	7	E3	XC2S100E, 200E, 300E, 600E	-	I/O, L85N_Y	I/O, L111N	I/O, L118N_Y	I/O, L118N_Y	I/O, L118N	I/O, L118N_Y
I/O	7	E1	-	-	-	-	-	I/O	I/O	I/O
I/O	7	F5	-	-	-	I/O	I/O	I/O	I/O	I/O
I/O, L#P_Y	7	F4	XC2S100E, 200E, 300E, 600E	-	I/O, L84P_Y	I/O, L110P	I/O, L117P_Y	I/O, L117P_Y	I/O, L117P	I/O, L117P_Y
I/O, L#N_Y	7	F3	XC2S100E, 200E, 300E, 600E	-	I/O, L84N_Y	I/O, L110N	I/O, L117N_Y	I/O, L117N_Y	I/O, L117N	I/O, L117N_Y
I/O, VREF Bank 7, L#P_Y	7	F2	XC2S150E, 200E, 300E, 400E, 600E	All	I/O, VREF Bank 7, L83P	I/O, VREF Bank 7, L109P_Y	I/O, VREF Bank 7, L116P_Y	I/O, VREF Bank 7, L116P_Y	I/O, VREF Bank 7, L116P_Y	I/O, VREF Bank 7, L116P_Y
I/O, L#N_Y	7	F1	XC2S150E, 200E, 300E, 400E, 600E	-	I/O, L83N	I/O, L109N_Y	I/O, L116N_Y	I/O, L116N_Y	I/O, L116N_Y	I/O, L116N_Y
I/O	7	G5	-	-	-	I/O	I/O	I/O	I/O	I/O
I/O, L#P_Y	7	G4	XC2S150E, 200E, 300E, 400E	-	-	I/O, L108P_Y	I/O, L115P_Y	I/O, L115P_Y	I/O, L115P_Y	I/O, L115P
I/O, L#N_Y	7	G3	XC2S150E, 200E, 300E, 400E	-	I/O	I/O, L108N_Y	I/O, L115N_Y	I/O, L115N_Y	I/O, L115N_Y	I/O, L115N
I/O, L#P_Y	7	G2	XC2S100E, 150E, 300E, 600E	XC2S600E	I/O, L82P_Y	I/O, L107P_Y	I/O, L114P	I/O, L114P_Y	I/O, L114P	I/O, VREF Bank 7, L114P_Y
I/O, L#N_Y	7	G1	XC2S100E, 150E, 300E, 600E	-	I/O, L82N_Y	I/O, L107N_Y	I/O, L114N	I/O, L114N_Y	I/O, L114N	I/O, L114N_Y

FG456 Pinouts (XC2S100E, XC2S150E, XC2S200E, XC2S300E, XC2S400E, XC2S600E)

Pad Name			LVDS Async. Output Option	V_{REF} Option	Device-Specific Pinouts: XC2S					
Function	Bank	Pin			100E	150E	200E	300E	400E	600E
I/O	7	H5	-	-	-	-	-	I/O	I/O	I/O
I/O, VREF Bank 7, L#P_Y	7	H3	XC2S300E, 400E, 600E	All	I/O, VREF Bank 7, L81P	I/O, VREF Bank 7, L106P	I/O, VREF Bank 7, L113P	I/O, VREF Bank 7, L113P_Y	I/O, VREF Bank 7, L113P_Y	I/O, VREF Bank 7, L113P_Y
I/O, L#N_Y	7	H4	XC2S300E, 400E, 600E	-	I/O, L81N	I/O, L106N	I/O, L113N	I/O, L113N_Y	I/O, L113N_Y	I/O, L113N_Y
I/O, L#P_YY	7	H2	All	-	I/O, L80P_YY	I/O, L105P_YY	I/O, L112P_YY	I/O, L112P_YY	I/O, L112P_YY	I/O, L112P_YY
I/O, L#N_YY	7	H1	All	-	I/O, L80N_YY	I/O, L105N_YY	I/O, L112N_YY	I/O, L112N_YY	I/O, L112N_YY	I/O, L112N_YY
I/O	7	J6	-	-	-	-	I/O	I/O	I/O	I/O
I/O, L#P_Y	7	J4	XC2S150E, 200E, 300E, 400E	-	-	I/O, L104P_Y	I/O, L111P_Y	I/O, L111P_Y	I/O, L111P_Y	I/O, L111P
I/O, L#N_Y	7	J5	XC2S100E, 150E, 200E, 300E, 400E	-	I/O, L79P_Y	I/O, L104N_Y	I/O, L111N_Y	I/O, L111N_Y	I/O, L111N_Y	I/O, L111N
I/O, L#P_Y	7	J3	XC2S100E, 150E, 200E, 300E, 600E	-	I/O, L79N_Y	I/O, L103P_Y	I/O, L110P_Y	I/O, L110P_Y	I/O, L110P	I/O, L110P_Y
I/O, L#N_Y	7	J2	XC2S150E, 200E, 300E, 600E	-	-	I/O, L103N_Y	I/O, L110N_Y	I/O, L110N_Y	I/O, L110N	I/O, L110N_Y
I/O	7	J1	-	-	-	-	I/O	I/O	I/O	I/O
I/O, L#P	7	K5	XC2S100E, 150E, 200E, 300E, 600E(1)	-	I/O, L78P_YY	I/O, L102P_YY	I/O, L109P_YY	I/O, L109P_YY	I/O, L109P	I/O, L109P_Y
I/O, L#N	7	K6	XC2S100E, 150E, 200E, 300E, 600E(1)	-	I/O, L78N_YY	I/O, L102N_YY	I/O, L109N_YY	I/O, L109N_YY	I/O, L109N	I/O, L109N_Y
I/O, VREF Bank 7, L#P_Y	7	K3	XC2S300E, 400E, 600E	All	I/O, VREF Bank 7, L77P	I/O, VREF Bank 7, L101P	I/O, VREF Bank 7, L108P	I/O, VREF Bank 7, L108P_Y	I/O, VREF Bank 7, L108P_Y	I/O, VREF Bank 7, L108P_Y
I/O, L#N_Y	7	K4	XC2S300E, 400E, 600E	-	I/O, L77N	I/O, L101N	I/O, L108N	I/O, L108N_Y	I/O, L108N_Y	I/O, L108N_Y
I/O	7	K2	-	-	-	-	-	I/O	I/O	I/O
I/O, L#P_Y	7	K1	XC2S300E, 400E	-	-	-	I/O, L107P	I/O, L107P_Y	I/O, L107P_Y	I/O, L107P
I/O, L#N_Y	7	L1	XC2S100E, 150E, 300E, 400E	-	I/O, L76P_Y	I/O, L100P_Y	I/O, L107N	I/O, L107N_Y	I/O, L107N_Y	I/O, L107N
I/O, L#P_Y	7	L3	XC2S100E, 150E, 200E, 300E, 600E	XC2S400E, 600E	I/O, L76N_Y	I/O, L100N_Y	I/O, L106P_Y	I/O, L106P_Y	I/O, VREF Bank 7, L106P	I/O, VREF Bank 7, L106P_Y
I/O, L#N_Y	7	L2	XC2S200E, 300E, 600E	-	-	I/O	I/O, L106N_Y	I/O, L106N_Y	I/O, L106N	I/O, L106N_Y
I/O	7	L4	-	-	-	-	-	I/O	I/O	I/O

FG456 Pinouts (XC2S100E, XC2S150E, XC2S200E, XC2S300E, XC2S400E, XC2S600E)

Pad Name			LVDS Async. Output Option	V_{REF} Option	Device-Specific Pinouts: XC2S					
Function	Bank	Pin			100E	150E	200E	300E	400E	600E
I/O, L#P_YY	7	L5	All	-	I/O, L75P_YY	I/O, L99P_YY	I/O, L105P_YY	I/O, L105P_YY	I/O, L105P_YY	I/O, L105P_YY
I/O (IRDY), L#N_YY	7	L6	All	-	I/O (IRDY), L75N_YY	I/O (IRDY), L99N_YY	I/O (IRDY), L105N_YY	I/O (IRDY), L105N_YY	I/O (IRDY), L105N_YY	I/O (IRDY), L105N_YY
I/O (TRDY)	6	M1	-	-	I/O (TRDY)	I/O (TRDY)	I/O (TRDY)	I/O (TRDY)	I/O (TRDY)	I/O (TRDY)
I/O	6	M2	-	-	-	-	-	I/O	I/O	I/O
I/O, L#P_Y	6	M3	XC2S200E, 300E, 600E	-	-	I/O	I/O, L104P_Y	I/O, L104P_Y	I/O, L104P	I/O, L104P_Y
I/O, L#N_Y	6	M4	XC2S100E, 150E, 200E, 300E, 600E	XC2S400E, 600E	I/O, L74P_Y	I/O, L98P_Y	I/O, L104N_Y	I/O, L104N_Y	I/O, VREF Bank 6, L104N	I/O, VREF Bank 6, L104N_Y
I/O, L#P_Y	6	M5	XC2S100E, 150E, 300E, 400E	-	I/O, L74N_Y	I/O, L98N_Y	I/O, L103P	I/O, L103P_Y	I/O, L103P_Y	I/O, L103P
I/O, L#N_Y	6	M6	XC2S300E, 400E	-	-	-	I/O, L103N	I/O, L103N_Y	I/O, L103N_Y	I/O, L103N
I/O	6	N1	-	-	-	-	-	I/O	I/O	I/O
I/O	6	N2	-	-	I/O, L73P	I/O, L97P	I/O	I/O	I/O	I/O
I/O, VREF Bank 6, L#P	6	N3	XC2S200E, 400E	All	I/O, VREF Bank 6, L73N	I/O, VREF Bank 6, L97N	I/O, VREF Bank 6, L102P_Y	I/O, VREF Bank 6, L102P	I/O, VREF Bank 6, L102P_Y	I/O, VREF Bank 6, L102P
I/O, L#N	6	N4	XC2S100E, 150E, 200E, 400E	-	I/O, L72P_Y	I/O, L96P_Y	I/O, L102N_Y	I/O, L102N	I/O, L102N_Y	I/O, L102N
I/O, L#P_Y	6	N5	XC2S100E, 150E, 300E, 600E	-	I/O, L72N_Y	I/O, L96N_Y	I/O, L101P	I/O, L101P_Y	I/O, L101P	I/O, L101P_Y
I/O, L#N_Y	6	N6	XC2S300E, 600E	-	-	-	I/O, L101N	I/O, L101N_Y	I/O, L101N	I/O, L101N_Y
I/O, L#P_Y	6	P1	XC2S150E, 200E, 300E, 600E	-	-	I/O, L95P_Y	I/O, L100P_Y	I/O, L100P_Y	I/O, L100P	I/O, L100P_Y
I/O, L#N_Y	6	P2	XC2S100E, 150E, 200E, 300E, 600E	-	I/O, L71P_Y	I/O, L95N_Y	I/O, L100N_Y	I/O, L100N_Y	I/O, L100N	I/O, L100N_Y
I/O	6	R1	XC2S100E, 150E	-	I/O, L71N_Y	I/O, L94P_Y	I/O	I/O	I/O	I/O
I/O, L#P_Y	6	P3	XC2S150E, 200E, 300E, 400E, 600E	-	-	I/O, L94N_Y	I/O, L99P_Y	I/O, L99P_Y	I/O, L99P_Y	I/O, L99P_Y
I/O, L#N_Y	6	P4	XC2S200E, 300E, 400E, 600E	-	-	-	I/O, L99N_Y	I/O, L99N_Y	I/O, L99N_Y	I/O, L99N_Y
I/O, L#P_YY	6	P5	All	-	I/O, L70P_YY	I/O, L93P_YY	I/O, L98P_YY	I/O, L98P_YY	I/O, L98P_YY	I/O, L98P_YY
I/O, L#N_YY	6	P6	All	-	I/O, L70N_YY	I/O, L93N_YY	I/O, L98N_YY	I/O, L98N_YY	I/O, L98N_YY	I/O, L98N_YY

FG456 Pinouts (XC2S100E, XC2S150E, XC2S200E, XC2S300E, XC2S400E, XC2S600E)

Pad Name			LVDS Async. Output Option	V_{REF} Option	Device-Specific Pinouts: XC2S					
Function	Bank	Pin			100E	150E	200E	300E	400E	600E
I/O, L#P_Y	6	R2	XC2S300E, 400E, 600E	-	I/O, L69P	I/O, L92P	I/O, L97P	I/O, L97P_Y	I/O, L97P_Y	I/O, L97P_Y
I/O, VREF Bank 6, L#N_Y	6	R3	XC2S300E, 400E, 600E	All	I/O, VREF Bank 6, L69N	I/O, VREF Bank 6, L92N	I/O, VREF Bank 6, L97N	I/O, VREF Bank 6, L97N_Y	I/O, VREF Bank 6, L97N_Y	I/O, VREF Bank 6, L97N_Y
I/O	6	R4	-	-	-	-	-	I/O	I/O	I/O
I/O	6	R5	-	-	I/O	I/O	I/O	I/O	I/O	I/O
I/O, L#P	6	T2	XC2S200E, 400E, 600E	XC2S600E	I/O, L68P	I/O, L91P	I/O, L96P_Y	I/O, L96P	I/O, L96P_Y	I/O, VREF Bank 6, L96P_Y
I/O, L#N	6	T3	XC2S200E, 400E, 600E	-	I/O, L68N	I/O, L91N	I/O, L96N_Y	I/O, L96N	I/O, L96N_Y	I/O, L96N_Y
I/O, L#P_Y	6	T4	XC2S150E, 300E, 400E	-	-	I/O, L90P_Y	I/O, L95P	I/O, L95P_Y	I/O, L95P_Y	I/O, L95P
I/O, L#N_Y	6	T5	XC2S150E, 300E, 400E	-	-	I/O, L90N_Y	I/O, L95N	I/O, L95N_Y	I/O, L95N_Y	I/O, L95N
I/O, L#P_Y	6	T1	XC2S150E, 200E, 300E, 400E, 600E	-	I/O, L67P	I/O, L89P_Y	I/O, L94P_Y	I/O, L94P_Y	I/O, L94P_Y	I/O, L94P_Y
I/O, VREF Bank 6, L#N_Y	6	U1	XC2S150E, 200E, 300E, 400E, 600E	All	I/O, VREF Bank 6, L67N	I/O, VREF Bank 6, L89N_Y	I/O, VREF Bank 6, L94N_Y	I/O, VREF Bank 6, L94N_Y	I/O, VREF Bank 6, L94N_Y	I/O, VREF Bank 6, L94N_Y
I/O	6	U2	XC2S100E	-	I/O, L66P_Y	I/O	I/O	I/O	I/O	I/O
I/O, L#P_Y	6	U3	XC2S100E, 150E, 200E, 300E, 400E, 600E	-	I/O, L66N_Y	I/O, L88P_Y	I/O, L93P_Y	I/O, L93P_Y	I/O, L93P_Y	I/O, L93P_Y
I/O, L#N_Y	6	U4	XC2S150E, 200E, 300E, 400E, 600E	-	-	I/O, L88N_Y	I/O, L93N_Y	I/O, L93N_Y	I/O, L93N_Y	I/O, L93N_Y
I/O	6	V1	-	-	-	-	-	I/O	I/O	I/O
I/O, L#P_Y	6	W1	XC2S100E, 200E, 300E, 600E	-	I/O, L65P_Y	I/O, L87P	I/O, L92P_Y	I/O, L92P_Y	I/O, L92P	I/O, L92P_Y
I/O, L#N_Y	6	V2	XC2S100E, 200E, 300E, 600E	XC2S200E, 300E, 400E, 600E	I/O, L65N_Y	I/O, L87N	I/O, VREF Bank 6, L92N_Y	I/O, VREF Bank 6, L92N_Y	I/O, VREF Bank 6, L92N	I/O, VREF Bank 6, L92N_Y
I/O	6	W2	-	-	I/O	I/O	I/O	I/O	I/O	I/O
I/O, L#P_Y	6	V3	XC2S200E, 300E, 400E	-	-	I/O, L86P	I/O, L91P_Y	I/O, L91P_Y	I/O, L91P_Y	I/O, L91P
I/O, L#N_Y	6	V4	XC2S200E, 300E, 400E	-	-	I/O, L86N	I/O, L91N_Y	I/O, L91N_Y	I/O, L91N_Y	I/O, L91N
I/O	6	Y1	-	-	-	-	-	I/O	I/O	I/O
I/O, L#P_YY	6	Y2	All	-	I/O, L64P_YY	I/O, L85P_YY	I/O, L90P_YY	I/O, L90P_YY	I/O, L90P_YY	I/O, L90P_YY
I/O, L#N_YY	6	W3	All	-	I/O, L64N_YY	I/O, L85N_YY	I/O, L90N_YY	I/O, L90N_YY	I/O, L90N_YY	I/O, L90N_YY
M1	-	U5	-	-	M1	M1	M1	M1	M1	M1

FG456 Pinouts (XC2S100E, XC2S150E, XC2S200E, XC2S300E, XC2S400E, XC2S600E)

Pad Name			LVDS Async. Output Option	V_{REF} Option	Device-Specific Pinouts: XC2S					
Function	Bank	Pin			100E	150E	200E	300E	400E	600E
M0	-	AA1	-	-	M0	M0	M0	M0	M0	M0
M2	-	AB2	-	-	M2	M2	M2	M2	M2	M2
I/O, L#N_Y	5	AA3	XC2S150E, 200E, 300E, 400E, 600E	-	-	I/O, L84N_Y	I/O, L89N_Y	I/O, L89N_Y	I/O, L89N_Y	I/O, L89N_Y
I/O, L#P_Y	5	AB3	XC2S150E, 200E, 300E, 400E, 600E	-	-	I/O, L84P_Y	I/O, L89P_Y	I/O, L89P_Y	I/O, L89P_Y	I/O, L89P_Y
I/O	5	AB4	-	-	-	-	-	I/O	I/O	I/O
I/O	5	AA5	XC2S100E, 150E	-	I/O, L63N_Y	I/O, L83N_Y	I/O	I/O	I/O	I/O
I/O, L#N_Y	5	W5	XC2S100E, 150E, 200E, 300E, 400E, 600E	-	I/O, L63P_Y	I/O, L83P_Y	I/O, L88N_Y	I/O, L88N_Y	I/O, L88N_Y	I/O, L88N_Y
I/O, L#P_Y	5	Y5	XC2S200E, 300E, 400E, 600E	-	I/O	I/O	I/O, L88P_Y	I/O, L88P_Y	I/O, L88P_Y	I/O, L88P_Y
I/O, L#N_Y	5	AB5	XC2S100E, 200E, 300E, 400E, 600E	XC2S200E, 300E, 400E, 600E	I/O, L62N_Y	I/O, L82N	I/O, VREF Bank 5, L87N_Y	I/O, VREF Bank 5, L87N_Y	I/O, VREF Bank 5, L87N_Y	I/O, VREF Bank 5, L87N_Y
I/O, L#P_Y	5	AB6	XC2S100E, 200E, 300E, 400E, 600E	-	I/O, L62P_Y	I/O, L82P	I/O, L87P_Y	I/O, L87P_Y	I/O, L87P_Y	I/O, L87P_Y
I/O	5	Y6	-	-	-	-	-	I/O	I/O	I/O
I/O	5	AA6	-	-	-	I/O	I/O	I/O	I/O	I/O
I/O, L#N_YY	5	V6	All	-	I/O, L61N_YY	I/O, L81N_YY	I/O, L86N_YY	I/O, L86N_YY	I/O, L86N_YY	I/O, L86N_YY
I/O, L#P_YY	5	W6	All	-	I/O, L61P_YY	I/O, L81P_YY	I/O, L86P_YY	I/O, L86P_YY	I/O, L86P_YY	I/O, L86P_YY
I/O, VREF Bank 5, L#N_YY	5	AB7	All	All	I/O, VREF Bank 5, L60N_YY	I/O, VREF Bank 5, L80N_YY	I/O, VREF Bank 5, L85N_YY	I/O, VREF Bank 5, L85N_YY	I/O, VREF Bank 5, L85N_YY	I/O, VREF Bank 5, L85N_YY
I/O, L#P_YY	5	AA7	All	-	I/O, L60P_YY	I/O, L80P_YY	I/O, L85P_YY	I/O, L85P_YY	I/O, L85P_YY	I/O, L85P_YY
I/O	5	Y7	-	-	-	I/O	I/O	I/O	I/O	I/O
I/O, L#N_Y	5	V7	XC2S300E, 600E	-	-	I/O, L79N	I/O, L84N	I/O, L84N_Y	I/O, L84N	I/O, L84N_Y
I/O, L#P_Y	5	W7	XC2S300E, 600E	-	I/O	I/O, L79P	I/O, L84P	I/O, L84P_Y	I/O, L84P	I/O, L84P_Y
I/O, L#N_Y	5	AB8	XC2S100E, 300E, 600E	XC2S600E	I/O, L59N_Y	I/O, L78N	I/O, L83N	I/O, L83N_Y	I/O, L83N	I/O, VREF Bank 5, L83N_Y
I/O, L#P_Y	5	AA8	XC2S100E, 300E, 600E	-	I/O, L59P_Y	I/O, L78P	I/O, L83P	I/O, L83P_Y	I/O, L83P	I/O, L83P_Y
I/O	5	Y8	-	-	-	-	-	I/O	I/O	I/O

FG456 Pinouts (XC2S100E, XC2S150E, XC2S200E, XC2S300E, XC2S400E, XC2S600E)

Pad Name			LVDS Async. Output Option	V_{REF} Option	Device-Specific Pinouts: XC2S					
Function	Bank	Pin			100E	150E	200E	300E	400E	600E
I/O, VREF Bank 5, L#N_Y	5	V8	XC2S100E, 200E, 300E, 400E, 600E	All	I/O, VREF Bank 5, L58N_Y	I/O, VREF Bank 5, L77N	I/O, VREF Bank 5, L82N_Y	I/O, VREF Bank 5, L82N_Y	I/O, VREF Bank 5, L82N_Y	I/O, VREF Bank 5, L82N_Y
I/O, L#P_Y	5	W8	XC2S100E, 200E, 300E, 400E, 600E	-	I/O, L58P_Y	I/O, L77P	I/O, L82P_Y	I/O, L82P_Y	I/O, L82P_Y	I/O, L82P_Y
I/O, L#N_Y	5	AB9	XC2S100E, 200E, 300E, 400E, 600E	-	I/O, L57N_Y	I/O, L76N	I/O, L81N_Y	I/O, L81N_Y	I/O, L81N_Y	I/O, L81N_Y
I/O, L#P_Y	5	AA9	XC2S100E, 200E, 300E, 400E, 600E	-	I/O, L57P_Y	I/O, L76P	I/O, L81P_Y	I/O, L81P_Y	I/O, L81P_Y	I/O, L81P_Y
I/O	5	AB10	-	-	-	-	I/O	I/O	I/O	I/O
I/O, L#N_Y	5	W9	XC2S150E, 300E, 400E, 600E	-	-	I/O, L75N_Y	I/O, L80N	I/O, L80N_Y	I/O, L80N_Y	I/O, L80N_Y
I/O, L#P_Y	5	Y9	XC2S100E, 150E, 300E, 400E, 600E	-	I/O, L56N_Y	I/O, L75P_Y	I/O, L80P	I/O, L80P_Y	I/O, L80P_Y	I/O, L80P_Y
I/O, L#N_Y	5	V9	XC2S100E, 150E, 300E, 400E, 600E	-	I/O, L56P_Y	I/O, L74N_Y	I/O, L79N	I/O, L79N_Y	I/O, L79N_Y	I/O, L79N_Y
I/O, L#P_Y	5	U9	XC2S150E, 300E, 400E, 600E	-	-	I/O, L74P_Y	I/O, L79P	I/O, L79P_Y	I/O, L79P_Y	I/O, L79P_Y
I/O	5	AA10	-	-	-	-	I/O	I/O	I/O	I/O
I/O, L#N_Y	5	W10	XC2S200E, 300E, 400E, 600E	-	I/O, L55N	I/O, L73N	I/O, L78N_Y	I/O, L78N_Y	I/O, L78N_Y	I/O, L78N_Y
I/O, L#P_Y	5	Y10	XC2S200E, 300E, 400E, 600E	-	I/O, L55P	I/O, L73P	I/O, L78P_Y	I/O, L78P_Y	I/O, L78P_Y	I/O, L78P_Y
I/O, VREF Bank 5, L#N_Y	5	V10	XC2S200E, 300E, 400E, 600E	All	I/O, VREF Bank 5, L54N	I/O, VREF Bank 5, L72N	I/O, VREF Bank 5, L77N_Y	I/O, VREF Bank 5, L77N_Y	I/O, VREF Bank 5, L77N_Y	I/O, VREF Bank 5, L77N_Y
I/O, L#P_Y	5	U10	XC2S200E, 300E, 400E, 600E	-	I/O, L54P	I/O, L72P	I/O, L77P_Y	I/O, L77P_Y	I/O, L77P_Y	I/O, L77P_Y
I/O	5	U11	-	-	-	-	-	I/O	I/O	I/O
I/O	5	V11	-	-	-	-	I/O	I/O	I/O	I/O
I/O, L#N	5	W11	XC2S200E, 400E	-	I/O	I/O, L71N	I/O, L76N_Y	I/O, L76N	I/O, L76N_Y	I/O, L76N
I/O, L#P	5	Y11	XC2S200E, 400E	XC2S400E, 600E	-	I/O, L71P	I/O, L76P_Y	I/O, L76P	I/O, VREF Bank 5, L76P_Y	I/O, VREF Bank 5, L76P
I/O	5	AA11	-	-	-	-	-	I/O	I/O	I/O
I/O (DLL), L#N	5	AB11	-	-	I/O (DLL), L53N	I/O (DLL), L70N	I/O (DLL), L75N	I/O (DLL), L75N	I/O (DLL), L75N	I/O (DLL), L75N
GCK1, I	5	AB12	-	-	GCK1, I	GCK1, I	GCK1, I	GCK1, I	GCK1, I	GCK1, I

FG456 Pinouts (XC2S100E, XC2S150E, XC2S200E, XC2S300E, XC2S400E, XC2S600E)

Pad Name			LVDS Async. Output Option	V_{REF} Option	Device-Specific Pinouts: XC2S					
Function	Bank	Pin			100E	150E	200E	300E	400E	600E
GCK0, I	4	AA12	-	-	GCK0, I	GCK0, I	GCK0, I	GCK0, I	GCK0, I	GCK0, I
I/O (DLL), L#P	4	Y12	-	-	I/O (DLL), L53P	I/O (DLL), L70P	I/O (DLL), L75P	I/O (DLL), L75P	I/O (DLL), L75P	I/O (DLL), L75P
I/O	4	W12	-	-	-	-	-	I/O	I/O	I/O
I/O, L#N	4	V12	XC2S150E, 300E, 600E	-	-	I/O, L69N_Y	I/O, L74N	I/O, L74N_Y	I/O, L74N	I/O, L74N_Y
I/O, L#P	4	U12	XC2S150E, 300E, 600E	XC2S400E, 600E	I/O, L52N	I/O, L69P_Y	I/O, L74P	I/O, L74P_Y	I/O, VREF Bank 4, L74P	I/O, VREF Bank 4, L74P_Y
I/O, L#N	4	AB13	XC2S300E, 600E	-	I/O, L52P	I/O	I/O, L73N	I/O, L73N_Y	I/O, L73N	I/O, L73N_Y
I/O, L#P	4	AA13	XC2S300E, 600E	-	-	-	I/O, L73P	I/O, L73P_Y	I/O, L73P	I/O, L73P_Y
I/O	4	Y13	-	-	-	-	-	I/O	I/O	I/O
I/O, L#N	4	W13	XC2S200E, 300E, 400E, 600E	-	I/O, L51N	I/O, L68N	I/O, L72N_Y	I/O, L72N_Y	I/O, L72N_Y	I/O, L72N_Y
I/O, VREF Bank 4, L#P	4	V13	XC2S200E, 300E, 400E, 600E	All	I/O, VREF Bank 4, L51P	I/O, VREF Bank 4, L68P	I/O, VREF Bank 4, L72P_Y	I/O, VREF Bank 4, L72P_Y	I/O, VREF Bank 4, L72P_Y	I/O, VREF Bank 4, L72P_Y
I/O	4	U13	-	-	I/O, L50N	I/O, L67N	I/O	I/O	I/O	I/O
I/O, L#N	4	AB14	-	-	I/O, L50P	I/O, L67P	I/O, L71N	I/O, L71N	I/O, L71N	I/O, L71N
I/O, L#P	4	AA14	-	-	-	-	I/O, L71P	I/O, L71P	I/O, L71P	I/O, L71P
I/O	4	AB15	-	-	-	-	I/O	I/O	I/O	I/O
I/O, L#N	4	Y14	XC2S100E, 150E, 200E	-	I/O, L49N_Y	I/O, L66N_Y	I/O, L70N_Y	I/O, L70N	I/O, L70N	I/O, L70N
I/O, L#P	4	W14	XC2S100E, 150E, 200E	-	I/O, L49P_Y	I/O, L66P_Y	I/O, L70P_Y	I/O, L70P	I/O, L70P	I/O, L70P
I/O, L#N	4	U14	XC2S150E, 200E	-	-	I/O, L65N_Y	I/O, L69N_Y	I/O, L69N	I/O, L69N	I/O, L69N
I/O, L#P	4	V14	XC2S150E, 200E	-	-	I/O, L65P_Y	I/O, L69P_Y	I/O, L69P	I/O, L69P	I/O, L69P
I/O, L#N	4	AA15	XC2S100E, 200E, 300E, 400E, 600E	-	I/O, L48N_Y	I/O, L64N	I/O, L68N_Y	I/O, L68N_Y	I/O, L68N_Y	I/O, L68N_Y
I/O, L#P	4	Y15	XC2S100E, 200E, 300E, 400E, 600E	-	I/O, L48P_Y	I/O, L64P	I/O, L68P_Y	I/O, L68P_Y	I/O, L68P_Y	I/O, L68P_Y
I/O, L#N	4	W15	XC2S100E, 200E, 300E, 400E, 600E	-	I/O, L47N_Y	I/O, L63N	I/O, L67N_Y	I/O, L67N_Y	I/O, L67N_Y	I/O, L67N_Y
I/O, VREF Bank 4, L#P	4	V15	XC2S100E, 200E, 300E, 400E, 600E	All	I/O, VREF Bank 4, L47P_Y	I/O, VREF Bank 4, L63P	I/O, VREF Bank 4, L67P_Y	I/O, VREF Bank 4, L67P_Y	I/O, VREF Bank 4, L67P_Y	I/O, VREF Bank 4, L67P_Y
I/O	4	AB16	-	-	-	-	-	I/O	I/O	I/O
I/O	4	AB17	-	-	I/O	I/O	I/O	I/O	I/O	I/O

FG456 Pinouts (XC2S100E, XC2S150E, XC2S200E, XC2S300E, XC2S400E, XC2S600E)

Pad Name			LVDS Async. Output Option	V_{REF} Option	Device-Specific Pinouts: XC2S					
Function	Bank	Pin			100E	150E	200E	300E	400E	600E
I/O, L#N	4	AA16	XC2S150E, 200E, 400E	XC2S600E	I/O, L46N	I/O, L62N_Y	I/O, L66N_Y	I/O, L66N	I/O, L66N_Y	I/O, VREF Bank 4, L66N
I/O, L#P	4	Y16	XC2S150E, 200E, 400E	-	I/O, L46P	I/O, L62P_Y	I/O, L66P_Y	I/O, L66P	I/O, L66P_Y	I/O, L66P
I/O, L#N	4	W16	XC2S150E, 200E	-	-	I/O, L61N_Y	I/O, L65N_Y	I/O, L65N	I/O, L65N	I/O, L65N
I/O, L#P	4	V16	XC2S150E, 200E	-	-	I/O, L61P_Y	I/O, L65P_Y	I/O, L65P	I/O, L65P	I/O, L65P
I/O, L#N_YY	4	AA17	All	-	I/O, L45N_YY	I/O, L60N_YY	I/O, L64N_YY	I/O, L64N_YY	I/O, L64N_YY	I/O, L64N_YY
I/O, VREF Bank 4, L#P_YY	4	Y17	All	All	I/O, VREF Bank 4, L45P_YY	I/O, VREF Bank 4, L60P_YY	I/O, VREF Bank 4, L64P_YY	I/O, VREF Bank 4, L64P_YY	I/O, VREF Bank 4, L64P_YY	I/O, VREF Bank 4, L64P_YY
I/O	4	AB18	XC2S100E	-	I/O, L44N_Y	I/O	I/O	I/O	I/O	I/O
I/O, L#N	4	W17	XC2S100E, 400E, 600E	-	I/O, L44P_Y	I/O, L59N	I/O, L63N	I/O, L63N	I/O, L63N_Y	I/O, L63N_Y
I/O, L#P	4	V17	XC2S400E, 600E	-	-	I/O, L59P	I/O, L63P	I/O, L63P	I/O, L63P_Y	I/O, L63P_Y
I/O	4	AA18	-	-	-	-	-	I/O	I/O	I/O
I/O, L#N	4	Y18	XC2S100E, 200E, 300E, 400E, 600E	-	I/O, L43N_Y	I/O, L58N	I/O, L62N_Y	I/O, L62N_Y	I/O, L62N_Y	I/O, L62N_Y
I/O, L#P	4	W18	XC2S100E, 200E, 300E, 400E, 600E	XC2S200E, 300E, 400E, 600E	I/O, L43P_Y	I/O, L58P	I/O, VREF Bank 4, L62P_Y	I/O, VREF Bank 4, L62P_Y	I/O, VREF Bank 4, L62P_Y	I/O, VREF Bank 4, L62P_Y
I/O	4	AB19	-	-	I/O	I/O	I/O	I/O	I/O	I/O
I/O, L#N	4	AA19	XC2S150E, 400E	-	-	I/O, L57N_Y	I/O, L61N	I/O, L61N	I/O, L61N_Y	I/O, L61N
I/O, L#P	4	Y19	XC2S150E, 400E	-	-	I/O, L57P_Y	I/O, L61P	I/O, L61P	I/O, L61P_Y	I/O, L61P
I/O	4	AB21	-	-	-	-	-	I/O	I/O	I/O
I/O, L#N_YY	4	AB20	All	-	I/O, L42N_YY	I/O, L56N_YY	I/O, L60N_YY	I/O, L60N_YY	I/O, L60N_YY	I/O, L60N_YY
I/O, L#P_YY	4	AA20	All	-	I/O, L42P_YY	I/O, L56P_YY	I/O, L60P_YY	I/O, L60P_YY	I/O, L60P_YY	I/O, L60P_YY
DONE	3	W20	-	-	DONE	DONE	DONE	DONE	DONE	DONE
$\overline{\text{PROGRAM}}$	-	Y21	-	-	$\overline{\text{PROGRAM}}$	$\overline{\text{PROGRAM}}$	$\overline{\text{PROGRAM}}$	$\overline{\text{PROGRAM}}$	$\overline{\text{PROGRAM}}$	$\overline{\text{PROGRAM}}$
I/O ($\overline{\text{INIT}}$), L#N_YY	3	W21	All	-	I/O ($\overline{\text{INIT}}$), L41N_YY	I/O ($\overline{\text{INIT}}$), L55N_YY	I/O ($\overline{\text{INIT}}$), L59N_YY	I/O ($\overline{\text{INIT}}$), L59N_YY	I/O ($\overline{\text{INIT}}$), L59N_YY	I/O ($\overline{\text{INIT}}$), L59N_YY
I/O (D7), L#P_YY	3	Y22	All	-	I/O (D7), L41P_YY	I/O (D7), L55P_YY	I/O (D7), L59P_YY	I/O (D7), L59P_YY	I/O (D7), L59P_YY	I/O (D7), L59P_YY
I/O	3	W22	-	-	-	-	-	I/O	I/O	I/O
I/O	3	V21	-	-	-	I/O	I/O	I/O	I/O	I/O

FG456 Pinouts (XC2S100E, XC2S150E, XC2S200E, XC2S300E, XC2S400E, XC2S600E)

Pad Name			LVDS Async. Output Option	V_{REF} Option	Device-Specific Pinouts: XC2S					
Function	Bank	Pin			100E	150E	200E	300E	400E	600E
I/O, L#N	3	V19	XC2S150E, 200E, 300E, 400E	-	-	I/O, L54N_Y	I/O, L58N_Y	I/O, L58N_Y	I/O, L58N_Y	I/O, L58N
I/O, L#P	3	V20	XC2S150E, 200E, 300E, 400E	-	I/O	I/O, L54P_Y	I/O, L58P_Y	I/O, L58P_Y	I/O, L58P_Y	I/O, L58P
I/O, L#N	3	V22	XC2S100E, 200E, 300E, 600E	XC2S200E, 300E, 400E, 600E	I/O, L40N_Y	I/O, L53N	I/O, VREF Bank 3, L57N_Y	I/O, VREF Bank 3, L57N_Y	I/O, VREF Bank 3, L57N	I/O, VREF Bank 3, L57N_Y
I/O, L#P	3	U22	XC2S100E, 200E, 300E, 600E	-	I/O, L40P_Y	I/O, L53P	I/O, L57P_Y	I/O, L57P_Y	I/O, L57P	I/O, L57P_Y
I/O	3	U21	-	-	-	-	-	I/O	I/O	I/O
I/O	3	U20	-	-	-	I/O	I/O	I/O	I/O	I/O
I/O, L#N	3	U18	XC2S100E, 200E, 300E, 600E	-	I/O, L39N_Y	I/O, L52N	I/O, L56N_Y	I/O, L56N_Y	I/O, L56N	I/O, L56N_Y
I/O, L#P	3	U19	XC2S100E, 200E, 300E, 600E	-	I/O, L39P_Y	I/O, L52P	I/O, L56P_Y	I/O, L56P_Y	I/O, L56P	I/O, L56P_Y
I/O, VREF Bank 3, L#N	3	T21	XC2S150E, 200E, 300E, 400E, 600E	All	I/O, VREF Bank 3, L38N	I/O, VREF Bank 3, L51N_Y	I/O, VREF Bank 3, L55N_Y	I/O, VREF Bank 3, L55N_Y	I/O, VREF Bank 3, L55N_Y	I/O, VREF Bank 3, L55N_Y
I/O, L#P	3	T22	XC2S150E, 200E, 300E, 400E, 600E	-	I/O, L38P	I/O, L51P_Y	I/O, L55P_Y	I/O, L55P_Y	I/O, L55P_Y	I/O, L55P_Y
I/O	3	T20	-	-	-	I/O	I/O	I/O	I/O	I/O
I/O, L#N	3	T18	XC2S150E, 200E, 300E, 400E	-	-	I/O, L50N_Y	I/O, L54N_Y	I/O, L54N_Y	I/O, L54N_Y	I/O, L54N
I/O, L#P	3	T19	XC2S150E, 200E, 300E, 400E	-	I/O	I/O, L50P_Y	I/O, L54P_Y	I/O, L54P_Y	I/O, L54P_Y	I/O, L54P
I/O, L#N	3	R21	XC2S100E, 150E, 300E, 600E	XC2S600E	I/O, L37N_Y	I/O, L49N_Y	I/O, L53N	I/O, L53N_Y	I/O, L53N	I/O, VREF Bank 3, L53N_Y
I/O, L#P	3	R22	XC2S100E, 150E, 300E, 600E	-	I/O, L37P_Y	I/O, L49P_Y	I/O, L53P	I/O, L53P_Y	I/O, L53P	I/O, L53P_Y
I/O	3	R20	-	-	-	-	-	I/O	I/O	I/O
I/O, VREF Bank 3, L#N	3	R18	XC2S300E, 400E, 600E	All	I/O, VREF Bank 3, L36N	I/O, VREF Bank 3, L48N	I/O, VREF Bank 3, L52N	I/O, VREF Bank 3, L52N_Y	I/O, VREF Bank 3, L52N_Y	I/O, VREF Bank 3, L52N_Y
I/O (D6), L#P	3	R19	XC2S300E, 400E, 600E	-	I/O (D6), L36P	I/O (D6), L48P	I/O (D6), L52P	I/O (D6), L52P_Y	I/O (D6), L52P_Y	I/O (D6), L52P_Y
I/O (D5), L#N_YY	3	P22	All	-	I/O (D5), L35N_YY	I/O (D5), L47N_YY	I/O (D5), L51N_YY	I/O (D5), L51N_YY	I/O (D5) L51N_YY	I/O (D5), L51N_YY
I/O, L#P_YY	3	P21	All	-	I/O, L35P_YY	I/O, L47P_YY	I/O, L51P_YY	I/O, L51P_YY	I/O, L51P_YY	I/O, L51P_YY

FG456 Pinouts (XC2S100E, XC2S150E, XC2S200E, XC2S300E, XC2S400E, XC2S600E)

Pad Name			LVDS Async. Output Option	V_{REF} Option	Device-Specific Pinouts: XC2S					
Function	Bank	Pin			100E	150E	200E	300E	400E	600E
I/O	3	P20	-	-	-	-	I/O	I/O	I/O	I/O
I/O, L#N	3	P18	XC2S150E, 200E, 300E, 400E	-	-	I/O, L46N_Y	I/O, L50N_Y	I/O, L50N_Y	I/O, L50N_Y	I/O, L50N
I/O, L#P	3	P19	XC2S100E, 150E, 200E, 300E, 400E	-	I/O, L34N_Y	I/O, L46P_Y	I/O, L50P_Y	I/O, L50P_Y	I/O, L50P_Y	I/O, L50P
I/O, L#N	3	N22	XC2S100E, 150E, 200E, 300E, 600E	-	I/O, L34P_Y	I/O, L45N_Y	I/O, L49N_Y	I/O, L49N_Y	I/O, L49N	I/O, L49N_Y
I/O, L#P	3	N21	XC2S150E, 200E, 300E, 600E	-	-	I/O, L45P_Y	I/O, L49P_Y	I/O, L49P_Y	I/O, L49P	I/O, L49P_Y
I/O	3	P17	-	-	-	-	I/O	I/O	I/O	I/O
I/O, L#N	3	N19	XC2S100E, 150E, 200E, 300E, 600E(1)	-	I/O, L33N_YY	I/O, L44N_YY	I/O, L48N_YY	I/O, L48N_YY	I/O, L48N	I/O, L48N_Y
I/O, L#P	3	N20	XC2S100E, 150E, 200E, 300E, 600E(1)	-	I/O, L33P_YY	I/O, L44P_YY	I/O, L48P_YY	I/O, L48P_YY	I/O, L48P	I/O, L48P_Y
I/O, VREF Bank 3, L#N	3	N18	XC2S300E, 400E, 600E	All	I/O, VREF Bank 3, L32N	I/O, VREF Bank 3, L43N	I/O, VREF Bank 3, L47N	I/O, VREF Bank 3, L47N_Y	I/O, VREF Bank 3, L47N_Y	I/O, VREF Bank 3, L47N_Y
I/O (D4), L#P	3	N17	XC2S300E, 400E, 600E	-	I/O (D4), L32P	I/O (D4), L43P	I/O (D4), L47P	I/O (D4), L47P_Y	I/O (D4), L47P_Y	I/O (D4), L47P_Y
I/O	3	M22	-	-	-	-	-	I/O	I/O	I/O
I/O, L#N	3	M20	XC2S300E, 400E	-	-	-	I/O, L46N	I/O, L46N_Y	I/O, L46N_Y	I/O, L46N
I/O, L#P	3	M21	XC2S100E, 150E, 300E, 400E	-	I/O, L31N_Y	I/O, L42N_Y	I/O, L46P	I/O, L46P_Y	I/O, L46P_Y	I/O, L46P
I/O, L#N	3	M18	XC2S100E, 150E, 200E, 300E, 600E	XC2S400E, 600E	I/O, L31P_Y	I/O, L42P_Y	I/O, L45N_Y	I/O, L45N_Y	I/O, VREF Bank 3, L45N	I/O, VREF Bank 3, L45N_Y
I/O, L#P	3	M19	XC2S200E, 300E, 600E	-	-	I/O	I/O, L45P_Y	I/O, L45P_Y	I/O, L45P	I/O, L45P_Y
I/O	3	M17	-	-	-	-	-	I/O	I/O	I/O
I/O (TRDY)	3	L22	-	-	I/O (TRDY)	I/O (TRDY)	I/O (TRDY)	I/O (TRDY)	I/O (TRDY)	I/O (TRDY)
I/O (IRDY), L#N_YY	2	L21	All	-	I/O (IRDY), L30N_YY	I/O (IRDY), L41N_YY	I/O (IRDY), L44N_YY	I/O (IRDY), L44N_YY	I/O (IRDY), L44N_YY	I/O (IRDY), L44N_YY
I/O, L#P_YY	2	L20	All	-	I/O, L30P_YY	I/O, L41P_YY	I/O, L44P_YY	I/O, L44P_YY	I/O, L44P_YY	I/O, L44P_YY
I/O	2	L19	-	-	-	-	-	I/O	I/O	I/O
I/O, L#N	2	L18	XC2S200E, 300E, 600E	-	-	I/O	I/O, L43N_Y	I/O, L43N_Y	I/O, L43N	I/O, L43N_Y

FG456 Pinouts (XC2S100E, XC2S150E, XC2S200E, XC2S300E, XC2S400E, XC2S600E)

Pad Name			LVDS Async. Output Option	V_{REF} Option	Device-Specific Pinouts: XC2S					
Function	Bank	Pin			100E	150E	200E	300E	400E	600E
I/O, L#P	2	L17	XC2S100E, 150E, 200E, 300E, 600E	XC2S400E, 600E	I/O, L29N_Y	I/O, L40N_Y	I/O, L43P_Y	I/O, L43P_Y	I/O, VREF Bank 2, L43P	I/O, VREF Bank 2, L43P_Y
I/O, L#N	2	K22	XC2S100E, 150E, 300E, 400E	-	I/O, L29P_Y	I/O, L40P_Y	I/O, L42N	I/O, L42N_Y	I/O, L42N_Y	I/O, L42N
I/O, L#P	2	K21	XC2S300E, 400E	-	-	-	I/O, L42P	I/O, L42P_Y	I/O, L42P_Y	I/O, L42P
I/O	2	K20	-	-	-	-	-	I/O	I/O	I/O
I/O (D3)	2	K19	-	-	I/O (D3)	I/O (D3), L39N	I/O (D3)	I/O (D3)	I/O (D3)	I/O (D3)
I/O, VREF Bank 2, L#N	2	K18	XC2S100E, 200E, 400E	All	I/O, VREF Bank 2, L28N_Y	I/O, VREF Bank 2, L39P	I/O, VREF Bank 2, L41N_Y	I/O, VREF Bank 2, L41N	I/O, VREF Bank 2, L41N_Y	I/O, VREF Bank 2, L41N
I/O, L#P	2	K17	XC2S100, 150E, 200E, 400E	-	I/O, L28P_Y	I/O, L38N_Y	I/O, L41P_Y	I/O, L41P	I/O, L41P_Y	I/O, L41P
I/O, L#N	2	J22	XC2S150E, 300E, 600E	-	I/O	I/O, L38P_Y	I/O, L40N	I/O, L40N_Y	I/O, L40N	I/O, L40N_Y
I/O, L#P	2	J21	XC2S300E, 600E	-	-	-	I/O, L40P	I/O, L40P_Y	I/O, L40P	I/O, L40P_Y
I/O, L#N	2	J20	XC2S150E, 200E, 300E, 600E	-	-	I/O, L37N_Y	I/O, L39N_Y	I/O, L39N_Y	I/O, L39N	I/O, L39N_Y
I/O, L#P	2	J19	XC2S100E, 150E, 200E, 300E, 600E	-	I/O, L27N_Y	I/O, L37P_Y	I/O, L39P_Y	I/O, L39P_Y	I/O, L39P	I/O, L39P_Y
I/O	2	H22	XC2S100E, 150E	-	I/O, L27P_Y	I/O, L36N_Y	I/O	I/O	I/O	I/O
I/O, L#N	2	J18	XC2S150E, 200E, 300E, 400E, 600E	-	-	I/O, L36P_Y	I/O, L38N_Y	I/O, L38N_Y	I/O, L38N_Y	I/O, L38N_Y
I/O, L#P	2	J17	XC2S200E, 300E, 400E, 600E	-	-	-	I/O, L38P_Y	I/O, L38P_Y	I/O, L38P_Y	I/O, L38P_Y
I/O, L#N	2	H21	XC2S150E, 200E, 300E, 400E, 600E	-	I/O	I/O, L35N_Y	I/O, L37N_Y	I/O, L37N_Y	I/O, L37N_Y	I/O, L37N_Y
I/O (D2), L#P	2	H20	XC2S150E, 200E, 300E, 400E, 600E	-	I/O (D2)	I/O (D2), L35P_Y	I/O (D2), L37P_Y	I/O (D2), L37P_Y	I/O (D2), L37P_Y	I/O (D2), L37P_Y
I/O (D1), L#N	2	H19	XC2S300E, 400E, 600E	-	I/O (D1), L26N	I/O (D1), L34N	I/O (D1), L36N	I/O (D1), L36N_Y	I/O (D1), L36N_Y	I/O (D1), L36N_Y
I/O, VREF Bank 2, L#P	2	H18	XC2S300E, 400E, 600E	All	I/O, VREF Bank 2, L26P	I/O, VREF Bank 2, L34P	I/O, VREF Bank 2, L36P	I/O, VREF Bank 2, L36P_Y	I/O, VREF Bank 2, L36P_Y	I/O, VREF Bank 2, L36P_Y
I/O	2	G22	-	-	-	-	-	I/O	I/O	I/O
I/O	2	F22	-	-	I/O	I/O	I/O	I/O	I/O	I/O

FG456 Pinouts (XC2S100E, XC2S150E, XC2S200E, XC2S300E, XC2S400E, XC2S600E)

Pad Name			LVDS Async. Output Option	V_{REF} Option	Device-Specific Pinouts: XC2S					
Function	Bank	Pin			100E	150E	200E	300E	400E	600E
I/O, L#N	2	G21	XC2S200E, 400E, 600E	XC2S600E	I/O, L25N	I/O, L33N	I/O, L35N_Y	I/O, L35N	I/O, L35N_Y	I/O, VREF Bank 2, L35N_Y
I/O, L#P	2	G20	XC2S200E, 400E, 600E	-	I/O, L25P	I/O, L33P	I/O, L35P_Y	I/O, L35P	I/O, L35P_Y	I/O, L35P_Y
I/O, L#N	2	G19	XC2S150E, 300E	-	-	I/O, L32N_Y	I/O, L34N	I/O, L34N_Y	I/O, L34N	I/O, L34N
I/O, L#P	2	G18	XC2S150E, 300E	-	-	I/O, L32P_Y	I/O, L34P	I/O, L34P_Y	I/O, L34P	I/O, L34P
I/O, L#N	2	E22	XC2S150E, 200E, 300E, 400E, 600E	-	I/O, L24N	I/O, L31N_Y	I/O, L33N_Y	I/O, L33N_Y	I/O, L33N_Y	I/O, L33N_Y
I/O, VREF Bank 2, L#P	2	F21	XC2S150E, 200E, 300E, 400E, 600E	All	I/O, VREF Bank 2, L24P	I/O, VREF Bank 2, L31P_Y	I/O, VREF Bank 2, L33P_Y	I/O, VREF Bank 2, L33P_Y	I/O, VREF Bank 2, L33P_Y	I/O, VREF Bank 2, L33P_Y
I/O	2	E21	XC2S100E	-	I/O, L23N_Y	I/O	I/O	I/O	I/O	I/O
I/O, L#N	2	F20	XC2S100E, 150E, 200E, 300E, 400E, 600E	-	I/O, L23P_Y	I/O, L30N_Y	I/O, L32N_Y	I/O, L32N_Y	I/O, L32N_Y	I/O, L32N_Y
I/O, L#P	2	F19	XC2S150E, 200E, 300E, 400E, 600E	-	-	I/O, L30P_Y	I/O, L32P_Y	I/O, L32P_Y	I/O, L32P_Y	I/O, L32P_Y
I/O	2	F18	-	-	-	-	-	I/O	I/O	I/O
I/O, L#N	2	D22	XC2S100E, 200E, 300E, 600E	-	I/O, L22N_Y	I/O, L29N	I/O, L31N_Y	I/O, L31N_Y	I/O, L31N	I/O, L31N_Y
I/O, L#P	2	D21	XC2S100E, 200E, 300E, 600E	XC2S200E, 300E, 400E, 600E	I/O, L22P_Y	I/O, L29P	I/O, VREF Bank 2, L31P_Y	I/O, VREF Bank 2, L31P_Y	I/O, VREF Bank 2, L31P	I/O, VREF Bank 2, L31P_Y
I/O, L#N	2	E20	XC2S200E, 300E, 400E	-	I/O	I/O, L28N	I/O, L30N_Y	I/O, L30N_Y	I/O, L30N_Y	I/O, L30N
I/O, L#P	2	E19	XC2S200E, 300E, 400E	-	-	I/O, L28P	I/O, L30P_Y	I/O, L30P_Y	I/O, L30P_Y	I/O, L30P
I/O	2	D20	-	-	-	-	-	I/O	I/O	I/O
I/O (DIN, D0), L#N_YY	2	C22	All	-	I/O (DIN, D0), L21N_YY	I/O (DIN, D0), L27N_YY	I/O (DIN, D0), L29N_YY	I/O (DIN, D0), L29N_YY	I/O (DIN, D0), L29N_YY	I/O (DIN, D0), L29N_YY
I/O (DOUT, BUSY), L#P_YY	2	C21	All	-	I/O (DOUT, BUSY), L21P_YY	I/O (DOUT, BUSY), L27P_YY	I/O (DOUT, BUSY), L29P_YY	I/O (DOUT, BUSY), L29P_YY	I/O (DOUT, BUSY), L29P_YY	I/O (DOUT, BUSY), L29P_YY
CCLK	2	B22	-	-	CCLK	CCLK	CCLK	CCLK	CCLK	CCLK
TDO	2	A21	-	-	TDO	TDO	TDO	TDO	TDO	TDO
TDI	-	C19	-	-	TDI	TDI	TDI	TDI	TDI	TDI
I/O ($\overline{CS}$), L#P_YY	1	B20	All	-	I/O ($\overline{CS}$), L20P_YY	I/O ($\overline{CS}$), L26P_YY	I/O ($\overline{CS}$), L28P_YY	I/O ($\overline{CS}$), L28P_YY	I/O ($\overline{CS}$), L28P_YY	I/O ($\overline{CS}$), L28P_YY

FG456 Pinouts (XC2S100E, XC2S150E, XC2S200E, XC2S300E, XC2S400E, XC2S600E)

Pad Name			LVDS Async. Output Option	V_{REF} Option	Device-Specific Pinouts: XC2S					
Function	Bank	Pin			100E	150E	200E	300E	400E	600E
I/O ($\overline{WRITE}$), L#N_YY	1	A20	All	-	I/O ($\overline{WRITE}$), L20N_YY	I/O ($\overline{WRITE}$), L26N_YY	I/O ($\overline{WRITE}$), L28N_YY	I/O ($\overline{WRITE}$), L28N_YY	I/O ($\overline{WRITE}$), L28N_YY	I/O ($\overline{WRITE}$), L28N_YY
I/O	1	D18	-	-	-	-	-	I/O	I/O	I/O
I/O	1	C18	-	-	-	I/O	I/O	I/O	I/O	I/O
I/O, L#P	1	B19	XC2S200E, 300E, 400E, 600E	-	-	I/O, L25P	I/O, L27P_Y	I/O, L27P_Y	I/O, L27P_Y	I/O, L27P_Y
I/O, L#N	1	A19	XC2S200E, 300E, 400E, 600E	-	I/O	I/O, L25N	I/O, L27N_Y	I/O, L27N_Y	I/O, L27N_Y	I/O, L27N_Y
I/O, L#P	1	B18	XC2S100E, 200E, 300E, 400E, 600E	XC2S200E, 300E, 400E, 600E	I/O, L19P_Y	I/O, L24P	I/O, VREF Bank 1, L26P_Y	I/O, VREF Bank 1, L26P_Y	I/O, VREF Bank 1, L26P_Y	I/O, VREF Bank 1, L26P_Y
I/O, L#N	1	A18	XC2S100E, 200E, 300E, 400E, 600E	-	I/O, L19N_Y	I/O, L24N	I/O, L26N_Y	I/O, L26N_Y	I/O, L26N_Y	I/O, L26N_Y
I/O	1	D17	-	-	-	-	-	I/O	I/O	I/O
I/O	1	C17	-	-	-	I/O	I/O	I/O	I/O	I/O
I/O, L#P_YY	1	B17	All	-	I/O, L18P_YY	I/O, L23P_YY	I/O, L25P_YY	I/O, L25P_YY	I/O, L25P_YY	I/O, L25P_YY
I/O, L#N_YY	1	A17	All	-	I/O, L18N_YY	I/O, L23N_YY	I/O, L25N_YY	I/O, L25N_YY	I/O, L25N_YY	I/O, L25N_YY
I/O, VREF Bank 1, L#P_YY	1	E16	All	All	I/O, VREF Bank 1, L17P_YY	I/O, VREF Bank 1, L22P_YY	I/O, VREF Bank 1, L24P_YY	I/O, VREF Bank 1, L24P_YY	I/O, VREF Bank 1, L24P_YY	I/O, VREF Bank 1, L24P_YY
I/O, L#N_YY	1	E17	All	-	I/O, L17N_YY	I/O, L22N_YY	I/O, L24N_YY	I/O, L24N_YY	I/O, L24N_YY	I/O, L24N_YY
I/O	1	E15	-	-	-	I/O	I/O	I/O	I/O	I/O
I/O, L#P	1	D16	XC2S300E, 600E	-	-	I/O, L21P	I/O, L23P	I/O, L23P_Y	I/O, L23P	I/O, L23P_Y
I/O, L#N	1	C16	XC2S300E, 600E	-	I/O	I/O, L21N	I/O, L23N	I/O, L23N_Y	I/O, L23N	I/O, L23N_Y
I/O, L#P	1	B16	XC2S100E, 300E, 600E	XC2S600E	I/O, L16P_Y	I/O, L20P	I/O, L22P	I/O, L22P_Y	I/O, L22P	I/O, VREF Bank 1, L22P_Y
I/O, L#N	1	A16	XC2S100E, 300E, 600E	-	I/O, L16N_Y	I/O, L20N	I/O, L22N	I/O, L22N_Y	I/O, L22N	I/O, L22N_Y
I/O	1	F14	-	-	-	-	-	I/O	I/O	I/O
I/O, VREF Bank 1, L#P	1	D15	XC2S100E, 200E, 300E, 400E, 600E	All	I/O, VREF Bank 1, L15P_Y	I/O, VREF Bank 1, L19P	I/O, VREF Bank 1, L21P_Y	I/O, VREF Bank 1, L21P_Y	I/O, VREF Bank 1, L21P_Y	I/O, VREF Bank 1, L21P_Y
I/O, L#N	1	C15	XC2S100E, 200E, 300E, 400E, 600E	-	I/O, L15N_Y	I/O, L19N	I/O, L21N_Y	I/O, L21N_Y	I/O, L21N_Y	I/O, L21N_Y
I/O, L#P	1	B15	XC2S100E, 200E, 300E, 400E, 600E	-	I/O, L14P_Y	I/O, L18P	I/O, L20P_Y	I/O, L20P_Y	I/O, L20P_Y	I/O, L20P_Y

FG456 Pinouts (XC2S100E, XC2S150E, XC2S200E, XC2S300E, XC2S400E, XC2S600E)

Pad Name			LVDS Async. Output Option	V_{REF} Option	Device-Specific Pinouts: XC2S					
Function	Bank	Pin			100E	150E	200E	300E	400E	600E
I/O, L#N	1	A15	XC2S100E, 200E, 300E, 400E, 600E	-	I/O, L14N_Y	I/O, L18N	I/O, L20N_Y	I/O, L20N_Y	I/O, L20N_Y	I/O, L20N_Y
I/O	1	E14	-	-	-	-	I/O	I/O	I/O	I/O
I/O, L#P	1	D14	XC2S150E, 300E, 400E, 600E	-	-	I/O, L17P_Y	I/O, L19P	I/O, L19P_Y	I/O, L19P_Y	I/O, L19P_Y
I/O, L#N	1	C14	XC2S100E, 150E, 300E, 400E, 600E	-	I/O, L13P_Y	I/O, L17N_Y	I/O, L19N	I/O, L19N_Y	I/O, L19N_Y	I/O, L19N_Y
I/O, L#P	1	B14	XC2S100E, 150E, 300E, 400E, 600E	-	I/O, L13N_Y	I/O, L16P_Y	I/O, L18P	I/O, L18P_Y	I/O, L18P_Y	I/O, L18P_Y
I/O, L#N	1	A14	XC2S150E, 300E, 400E, 600E	-	-	I/O, L16N_Y	I/O, L18N	I/O, L18N_Y	I/O, L18N_Y	I/O, L18N_Y
I/O	1	E13	-	-	-	-	I/O	I/O	I/O	I/O
I/O, L#P	1	D13	XC2S200E, 300E, 400E, 600E	-	I/O, L12P	I/O, L15P	I/O, L17P_Y	I/O, L17P_Y	I/O, L17P_Y	I/O, L17P_Y
I/O, L#N	1	C13	XC2S200E, 300E, 400E, 600E	-	I/O, L12N	I/O, L15N	I/O, L17N_Y	I/O, L17N_Y	I/O, L17N_Y	I/O, L17N_Y
I/O, VREF Bank 1, L#P	1	B13	XC2S200E, 300E, 400E, 600E	All	I/O, VREF Bank 1, L11P	I/O, VREF Bank 1, L14P	I/O, VREF Bank 1, L16P_Y	I/O, VREF Bank 1, L16P_Y	I/O, VREF Bank 1, L16P_Y	I/O, VREF Bank 1, L16P_Y
I/O, L#N	1	A13	XC2S200E, 300E, 400E, 600E	-	I/O, L11N	I/O, L14N	I/O, L16N_Y	I/O, L16N_Y	I/O, L16N_Y	I/O, L16N_Y
I/O	1	F13	-	-	-	-	-	I/O	I/O	I/O
I/O, L#P	1	C12	XC2S300E, 600E	-	-	-	I/O, L15P	I/O, L15P_Y	I/O, L15P	I/O, L15P_Y
I/O, L#N	1	B12	XC2S300E, 600E	-	I/O, L10P	I/O	I/O, L15N	I/O, L15N_Y	I/O, L15N	I/O, L15N_Y
I/O, L#P	1	D12	XC2S150E, 300E, 600E	XC2S400E, 600E	I/O, L10N	I/O, L13P_Y	I/O, L14P	I/O, L14P_Y	I/O, VREF Bank 1, L14P	I/O, VREF Bank 1, L14P_Y
I/O, L#N	1	E12	XC2S150E, 300E, 600E	-	-	I/O, L13N_Y	I/O, L14N	I/O, L14N_Y	I/O, L14N	I/O, L14N_Y
I/O	1	F12	-	-	-	-	-	I/O	I/O	I/O
I/O (DLL), L#P	1	A12	-	-	I/O (DLL), L9P	I/O (DLL), L12P	I/O (DLL), L13P	I/O (DLL), L13P	I/O (DLL), L13P	I/O (DLL), L13P
GCK2, I	1	A11	-	-	GCK2, I	GCK2, I	GCK2, I	GCK2, I	GCK2, I	GCK2, I
GCK3, I	0	C11	-	-	GCK3, I	GCK3, I	GCK3, I	GCK3, I	GCK3, I	GCK3, I
I/O (DLL), L#N	0	B11	-	-	I/O (DLL), L9N	I/O (DLL), L12N	I/O (DLL), L13N	I/O (DLL), L13N	I/O (DLL), L13N	I/O (DLL), L13N
I/O	0	D11	-	-	-	-	-	I/O	I/O	I/O

FG456 Pinouts (XC2S100E, XC2S150E, XC2S200E, XC2S300E, XC2S400E, XC2S600E)

Pad Name			LVDS Async. Output Option	V_{REF} Option	Device-Specific Pinouts: XC2S					
Function	Bank	Pin			100E	150E	200E	300E	400E	600E
I/O	0	F11	-	XC2S400E, 600E	-	-	I/O	I/O	I/O, VREF Bank 0	I/O, VREF Bank 0
I/O, L#P	0	A10	XC2S300E, 600E	-	I/O	I/O, L11P	I/O, L12P	I/O, L12P_Y	I/O, L12P	I/O,L12P_Y
I/O, L#N	0	B10	XC2S300E, 600E	-	-	I/O, L11N	I/O, L12N	I/O, L12N_Y	I/O, L12N	I/O, L12N_Y
I/O	0	E11	-	-	-	-	-	I/O	I/O	I/O
I/O, L#P	0	C10	XC2S200E, 300E, 400E, 600E	-	I/O, L8P	I/O, L10P	I/O, L11P_Y	I/O, L11P_Y	I/O,L11P_Y	I/O,L11P_Y
I/O, VREF Bank 0, L#N	0	D10	XC2S200E, 300E, 400E, 600E	All	I/O, VREF Bank 0, L8N	I/O, VREF Bank 0, L10N	I/O, VREF Bank 0, L11N_Y	I/O, VREF Bank 0, L11N_Y	I/O, VREF Bank 0, L11N_Y	I/O, VREF Bank 0, L11N_Y
I/O	0	F10	-	-	I/O, L7P	I/O	I/O	I/O	I/O	I/O
I/O, L#P	0	A9	-	-	I/O, L7N	I/O	I/O, L10P	I/O, L10P	I/O, L10P	I/O, L10P
I/O, L#N	0	B9	-	-	-	-	I/O, L10N	I/O, L10N	I/O, L10N	I/O, L10N
I/O	0	E10	-	-	-	-	I/O	I/O	I/O	I/O
I/O, L#P	0	C9	XC2S100E, 150E, 200E	-	I/O, L6P_Y	I/O, L9P_Y	I/O, L9P_Y	I/O, L9P	I/O, L9P	I/O, L9P
I/O, L#N	0	D9	XC2S100E, 150E, 200E	-	I/O, L6N_Y	I/O, L9N_Y	I/O, L9N_Y	I/O, L9N	I/O, L9N	I/O, L9N
I/O, L#P	0	F9	XC2S150E, 200E	-	-	I/O, L8P_Y	I/O, L8P_Y	I/O, L8P	I/O, L8P	I/O, L8P
I/O, L#N	0	E9	XC2S150E, 200E	-	-	I/O, L8N_Y	I/O, L8N_Y	I/O, L8N	I/O, L8N	I/O, L8N
I/O, L#P	0	A8	XC2S100E, 200E, 300E, 400E, 600E	-	I/O, L5P_Y	I/O, L7P	I/O, L7P_Y	I/O, L7P_Y	I/O, L7P_Y	I/O, L7P_Y
I/O, L#N	0	B8	XC2S100E, 200E, 300E, 400E, 600E	-	I/O, L5N_Y	I/O, L7N	I/O, L7N_Y	I/O, L7N_Y	I/O, L7N_Y	I/O, L7N_Y
I/O, L#P	0	C8	XC2S100E, 200E, 300E, 400E, 600E	-	I/O, L4P_Y	I/O, L6P	I/O, L6P_Y	I/O, L6P_Y	I/O, L6P_Y	I/O, L6P_Y
I/O, VREF Bank 0, L#N	0	D8	XC2S100E, 200E, 300E, 400E, 600E	All	I/O, VREF Bank 0, L4N_Y	I/O, VREF Bank 0, L6N	I/O, VREF Bank 0, L6N_Y	I/O, VREF Bank 0, L6N_Y	I/O, VREF Bank 0, L6N_Y	I/O, VREF Bank 0, L6N_Y
I/O	0	A7	-	-	-	-	-	I/O	I/O	I/O
I/O	0	B7	-	-	I/O	I/O	I/O	I/O	I/O	I/O
I/O, L#P	0	C7	XC2S150E, 200E	XC2S600E	I/O, L3P	I/O, L5P_Y	I/O, L5P_Y	I/O, L5P	I/O, L5P	I/O, VREF Bank 0, L5P
I/O, L#N	0	D7	XC2S150E, 200E	-	I/O, L3N	I/O, L5N_Y	I/O, L5N_Y	I/O, L5N	I/O, L5N	I/O, L5N
I/O, L#P	0	E8	XC2S150E, 200E	-	-	I/O, L4P_Y	I/O, L4P_Y	I/O, L4P	I/O, L4P	I/O, L4P
I/O, L#N	0	E7	XC2S150E, 200E	-	-	I/O, L4N_Y	I/O, L4N_Y	I/O, L4N	I/O, L4N	I/O, L4N

FG456 Pinouts (XC2S100E, XC2S150E, XC2S200E, XC2S300E, XC2S400E, XC2S600E)

Pad Name			LVDS Async. Output Option	V_{REF} Option	Device-Specific Pinouts: XC2S					
Function	Bank	Pin			100E	150E	200E	300E	400E	600E
I/O, L#P_YY	0	A6	All	-	I/O, L2P_YY	I/O, L3P_YY	I/O, L3P_YY	I/O, L3P_YY	I/O, L3P_YY	I/O, L3P_YY
I/O, VREF Bank 0, L#N_YY	0	B6	All	All	I/O, VREF Bank 0, L2N_YY	I/O, VREF Bank 0, L3N_YY	I/O, VREF Bank 0, L3N_YY	I/O, VREF Bank 0, L3N_YY	I/O, VREF Bank 0, L3N_YY	I/O, VREF Bank 0, L3N_YY
I/O	0	C6	XC2S100E	-	I/O, L1P_Y	I/O	I/O	I/O	I/O	I/O
I/O, L#P	0	A5	XC2S100E	-	I/O, L1N_Y	I/O, L2P	I/O, L2P	I/O, L2P	I/O, L2P	I/O, L2P
I/O, L#N	0	B5	-	-	-	I/O, L2N	I/O, L2N	I/O, L2N	I/O, L2N	I/O, L2N
I/O	0	D6	-	-	-	-	-	I/O	I/O	I/O
I/O, L#P	0	B4	XC2S100E, 200E, 300E, 400E, 600E	-	I/O, L0P_Y	I/O, L1P	I/O, L1P_Y	I/O, L1P_Y	I/O, L1P_Y	I/O, L1P_Y
I/O, L#N	0	C5	XC2S100E, 200E, 300E, 400E, 600E	XC2S200E, 300E, 400E, 600E	I/O, L0N_Y	I/O, L1N	I/O, VREF Bank 0, L1N_Y	I/O, VREF Bank 0, L1N_Y	I/O, VREF Bank 0, L1N_Y	I/O, VREF Bank 0, L1N_Y
I/O	0	A4	-	-	I/O	I/O	I/O	I/O	I/O	I/O
I/O, L#P	0	A3	XC2S150E, 400E, 600E	-	-	I/O, L0P_Y	I/O, L0P	I/O, L0P	I/O, L0P_Y	I/O, L0P_Y
I/O, L#N	0	B3	XC2S150E, 400E, 600E	-	-	I/O, L0N_Y	I/O, L0N	I/O, L0N	I/O, L0N_Y	I/O, L0N_Y
I/O	0	C4	-	-	-	-	-	I/O	I/O	I/O
I/O	0	D5	-	-	I/O	I/O	I/O	I/O	I/O	I/O
TCK	-	E6	-	-	TCK	TCK	TCK	TCK	TCK	TCK

Notes:

1. Although designated with the _YY suffix in the XC2S100E, XC2S150E, XC2S200E, and XC2S300E, these differential pairs are not asynchronous in the XC2S400E.

FG456 Differential Clock Pins

Clock	Bank	P		N	
		Pin	Name	Pin	Name
GCK0	4	AA12	GCK0, I	Y12	I/O (DLL), L#P
GCK1	5	AB12	GCK1, I	AB11	I/O (DLL), L#N
GCK2	1	A11	GCK2, I	A12	I/O (DLL), L#P
GCK3	0	C11	GCK3, I	B11	I/O (DLL), L#N

Additional FG456 Package Pins

VCCINT Pins								
D4(1)	D19(1)	E5	E18	F6	F17	G7	G8	G15
G16	H7	H16	R7	R16	T7	T8	T15	T16
U6	U17	V5	V18	W4(1)	W19(1)	-	-	-
VCCO Bank 0 Pins								
F7	F8	G9	G10	-	-	-	-	-

Additional FG456 Package Pins *(Continued)*

VCCO Bank 1 Pins								
F15	F16	G13	G14	-	-	-	-	-
VCCO Bank 2 Pins								
G17	H17	J16	K16	-	-	-	-	-
VCCO Bank 3 Pins								
N16	P16	R17	T17	-	-	-	-	-
VCCO Bank 4 Pins								
T13	T14	U15	U16	-	-	-	-	-
VCCO Bank 5 Pins								
T9	T10	U7	U8	-	-	-	-	-
VCCO Bank 6 Pins								
N7	P7	R6	T6	-	-	-	-	-
VCCO Bank 7 Pins								
G6	H6	J7	K7	-	-	-	-	-
GND Pins								
A1	A2(2)	A22	B1(2)	B2	B21	C3	C20	G11
G12	J9	J10	J11	J12	J13	J14	K9	K10
K11	K12	K13	K14	L7	L9	L10	L11	L12
L13	L14	L16	M7	M9	M10	M11	M12	M13
M14	M16	N9	N10	N11	N12	N13	N14	P9
P10	P11	P12	P13	P14	T11	T12	Y20	Y3
Y4(2)	AA2	AA4(2)	AA21	AA22(2)	AB1	AB22	-	-
Not Connected Pins								
A2(2)	B1(2)	D4(1)	D19(1)	W4(1)	W19(1)	Y4(2)	AA4(2)	AA22(2)

Notes:
1. VCCINT connections in XC2S400E and XC2S600E. No Connects (no internal connection) in XC2S100E, XC2S150E, XC2S200E, and XC2S300E.
2. GND connections in XC2S400E and XC2S600E. No Connects (no internal connection) in XC2S100E, XC2S150E, XC2S200E, and XC2S300E

FG676 Pinouts (XC2S400E, XC2S600E)

Pad Name		Pin	LVDS Async. Output Option	VREF Option	Device-Specific Pinouts	
Function	Bank				XC2S400E	XC2S600E
TMS	-	B1	-	-	TMS	TMS
I/O	7	D3	-	-	I/O	I/O
I/O, L204P	7	C2	-	-	-	I/O, L204P
I/O, L204N	7	C1	-	-	-	I/O, L204N
I/O, L203P	7	D2	XC2S600E	-	-	I/O, L203P_Y
I/O, L203N	7	D1	XC2S600E	-	I/O	I/O, L203N_Y
I/O, L202P_YY	7	E2	All	-	I/O, L202P_YY	I/O, L202P_YY
I/O, L202N_YY	7	E1	All	-	I/O, L202N_YY	I/O, L202N_YY

FG676 Pinouts (XC2S400E, XC2S600E) *(Continued)*

Pad Name		Pin	LVDS Async. Output Option	VREF Option	Device-Specific Pinouts	
Function	Bank				XC2S400E	XC2S600E
I/O, L201P	7	E4	XC2S400E	-	I/O, L201P_Y	I/O, L201P
I/O, L201N	7	F5	XC2S400E	-	I/O, L201N_Y	I/O, L201N
I/O, VREF Bank 7, L200P	7	F4	XC2S600E	All	I/O, VREF Bank 7, L200P	I/O, VREF Bank 7, L200P_Y
I/O, L200N	7	F3	XC2S600E	-	I/O, L200N	I/O, L200N_Y
I/O, L199P	7	F2	XC2S600E	-	-	I/O, L199P_Y
I/O, L199N	7	F1	XC2S600E	-	I/O	I/O, L199N_Y
I/O, L198P	7	G6	XC2S400E	-	I/O, L198P_Y	I/O, L198P
I/O, L198N	7	G5	XC2S400E	-	I/O, L198N_Y	I/O, L198N
I/O, L197P	7	G4	XC2S600E	-	I/O, L197P	I/O, L197P_Y
I/O, L197N	7	G3	XC2S600E	-	I/O, L197N	I/O, L197N_Y
I/O, VREF Bank 7, L196P_YY	7	G2	All	All	I/O, VREF Bank 7, L196P_YY	I/O, VREF Bank 7, L196P_YY
I/O, L196N_YY	7	G1	All	-	I/O, L196N_YY	I/O, L196N_YY
I/O	7	H7	-	-	I/O	I/O
I/O, L195P_YY	7	H6	All	-	I/O, L195P_YY	I/O, L195P_YY
I/O, L195N_YY	7	H5	All	-	I/O, L195N_YY	I/O, L195N_YY
I/O	7	J8	-	-	-	I/O
I/O, L194P	7	H2	XC2S400E	-	I/O, L194P_Y	I/O, L194P
I/O, L194N	7	H1	XC2S400E	-	I/O, L194N_Y	I/O, L194N
I/O, L193P	7	J7	XC2S600E	XC2S600E	I/O	I/O, VREF Bank 7, L193P_Y
I/O, L193N	7	J6	XC2S600E	-	-	I/O, L193N_Y
I/O	7	J5	-	-	I/O	I/O
I/O, L192P_YY	7	J4	All	-	I/O, L192P_YY	I/O, L192P_YY
I/O, L192N_YY	7	J3	All	-	I/O, L192N_YY	I/O, L192N_YY
I/O	7	K5	-	-	I/O	I/O
I/O, VREF Bank 7, L191P_YY	7	J2	All	All	I/O, VREF Bank 7, L191P_YY	I/O, VREF Bank 7, L191P_YY
I/O, L191N_YY	7	J1	All	-	I/O, L191N_YY	I/O, L191N_YY
I/O, L190P_YY	7	K8	All	-	I/O, L190P_YY	I/O, L190P_YY
I/O, L190N_YY	7	K7	All	-	I/O, L190N_YY	I/O, L190N_YY
I/O	7	K4	-	-	-	I/O
I/O, L189P_YY	7	K3	All	-	I/O, L189P_YY	I/O, L189P_YY
I/O, L189N_YY	7	K2	All	-	I/O, L189N_YY	I/O, L189N_YY
I/O	7	K1	-	-	-	I/O

FG676 Pinouts (XC2S400E, XC2S600E) *(Continued)*

Pad Name		Pin	LVDS Async. Output Option	VREF Option	Device-Specific Pinouts	
Function	Bank				XC2S400E	XC2S600E
I/O, L188P	7	L8	XC2S400E	-	I/O, L188P_Y	I/O, L188P
I/O, L188N	7	L7	XC2S400E	-	I/O, L188N_Y	I/O, L188N
I/O, L187P	7	L6	XC2S600E	-	I/O, L187P	I/O, L187P_Y
I/O, L187N	7	L5	XC2S600E	-	I/O, L187N	I/O, L187N_Y
I/O	7	L3	-	-	-	I/O
I/O, L186P	7	L2	XC2S600E	-	I/O, L186P	I/O, L186P_Y
I/O, L186N	7	L1	XC2S600E	-	I/O, L186N	I/O, L186N_Y
I/O	7	M9	-	-	-	I/O
I/O, L185P	7	M8	XC2S600E	-	I/O, L185P	I/O, L185P_Y
I/O, L185N	7	M7	XC2S600E	-	I/O, L185N	I/O, L185N_Y
I/O, VREF Bank 7, L184P_YY	7	M6	All	All	I/O, VREF Bank 7, L184P_YY	I/O, VREF Bank 7, L184P_YY
I/O, L184N_YY	7	M5	All	-	I/O, L184N_YY	I/O, L184N_YY
I/O	7	M4	-	-	-	I/O
I/O, L183P_YY	7	M2	All	-	I/O, L183P_YY	I/O, L183P_YY
I/O, L183N_YY	7	M1	All	-	I/O, L183N_YY	I/O, L183N_YY
I/O	7	N9	-	-	-	I/O
I/O, L182P	7	N8	XC2S400E	-	I/O, L182P_Y	I/O, L182P
I/O, L182N	7	N7	XC2S400E	-	I/O, L182N_Y	I/O, L182N
I/O, VREF Bank 7, L181P	7	N6	XC2S600E	All	I/O, VREF Bank 7, L181P	I/O, VREF Bank 7, L181P_Y
I/O, L181N	7	N5	XC2S600E	-	I/O, L181N	I/O, L181N_Y
I/O	7	N4	-	-	-	I/O
I/O, L180P_YY	7	N3	All	-	I/O, L180P_YY	I/O, L180P_YY
I/O, L180N_YY	7	N2	All	-	I/O, L180N_YY	I/O, L180N_YY
I/O	7	N1	-	-	-	I/O
I/O, L179P_YY	7	P1	All	-	I/O, L179P_YY	I/O, L179P_YY
I/O (IRDY), L179N_YY	7	P2	All	-	I/O (IRDY), L179N_YY	I/O (IRDY), L179N_YY
I/O (TRDY), L178P	6	P3	XC2S600E	-	I/O (TRDY)	I/O (TRDY), L178P_Y
I/O, L178N	6	P4	XC2S600E	-	-	I/O, L178N_Y
I/O, L177P	6	P5	XC2S600E	-	-	I/O, L177P_Y
I/O, L177N	6	P6	XC2S600E	-	I/O	I/O, L177N_Y
I/O	6	P7	-	-	I/O	I/O
I/O, L176P	6	P8	XC2S600E	-	I/O, L176P	I/O, L176P_Y

FG676 Pinouts (XC2S400E, XC2S600E) *(Continued)*

Pad Name		Pin	LVDS Async. Output Option	VREF Option	Device-Specific Pinouts	
Function	Bank				XC2S400E	XC2S600E
I/O, VREF Bank 6, L176N	6	P9	XC2S600E	All	I/O, VREF Bank 6, L176N	I/O, VREF Bank 6, L176N_Y
I/O, L175P	6	R1	XC2S400E	-	I/O, L175P_Y	I/O, L175P
I/O, L175N	6	R2	XC2S400E	-	I/O, L175N_Y	I/O, L175N
I/O	6	R4	-	-	-	I/O
I/O, L174P_YY	6	R5	All	-	I/O, L174P_YY	I/O, L174P_YY
I/O, L174N_YY	6	R6	All	-	I/O, L174N_YY	I/O, L174N_YY
I/O	6	R7	-	-	-	I/O
I/O, L173P_YY	6	R8	All	-	I/O, L173P_YY	I/O, L173P_YY
I/O, VREF Bank 6, L173N_YY	6	R9	All	All	I/O, VREF Bank 6, L173N_YY	I/O, VREF Bank 6, L173N_YY
I/O, L172P	6	T1	XC2S600E	-	I/O, L172P	I/O, L172P_Y
I/O, L172N	6	T2	XC2S600E	-	I/O, L172N	I/O, L172N_Y
I/O	6	T3	-	-	-	I/O
I/O, L171P	6	T5	XC2S600E	-	I/O, L171P	I/O, L171P_Y
I/O, L171N	6	T6	XC2S600E	-	I/O, L171N	I/O, L171N_Y
I/O	6	U1	-	-	-	I/O
I/O, L170P	6	T7	XC2S600E	-	I/O, L170P	I/O, L170P_Y
I/O, L170N	6	T8	XC2S600E	-	I/O, L170N	I/O, L170N_Y
I/O, L169P	6	U2	XC2S400E	-	I/O, L169P_Y	I/O, L169P
I/O, L169N	6	U3	XC2S400E	-	I/O, L169N_Y	I/O, L169N
I/O	6	U7	-	-	-	I/O
I/O, L168P	6	U4	XC2S600E	-	-	I/O, L168P_Y
I/O, L168N	6	U5	XC2S600E	-	I/O	I/O, L168N_Y
I/O	6	U8	-	-	I/O	I/O
I/O, L167P_YY	6	V1	All	-	I/O, L167P_YY	I/O, L167P_YY
I/O, L167N_YY	6	V2	All	-	I/O, L167N_YY	I/O, L167N_YY
I/O	6	V3	-	-	I/O	I/O
I/O, VREF Bank 6, L166P_YY	6	V4	All	All	I/O, VREF Bank 6, L166P_YY	I/O, VREF Bank 6, L166P_YY
I/O, L166N_YY	6	V5	All	-	I/O, L166N_YY	I/O, L166N_YY
I/O, L165P_YY	6	V6	All	-	I/O, L165P_YY	I/O, L165P_YY
I/O, L165N_YY	6	V7	All	-	I/O, L165N_YY	I/O, L165N_YY
I/O	6	V8	-	-	-	I/O
I/O, L164P	6	W1	XC2S600E	-	I/O, L164P	I/O, L164P_Y

FG676 Pinouts (XC2S400E, XC2S600E) *(Continued)*

Pad Name		Pin	LVDS Async. Output Option	VREF Option	Device-Specific Pinouts	
Function	Bank				XC2S400E	XC2S600E
I/O, L164N	6	W2	XC2S600E	XC2S600E	I/O, L164N	I/O, VREF Bank 6, L164N_Y
I/O, L163P	6	W5	XC2S400E	-	I/O, L163P_Y	I/O, L163P
I/O, L163N	6	W6	XC2S400E	-	I/O, L163N_Y	I/O, L163N
I/O	6	W7	-	-	I/O	I/O
I/O, L162P_YY	6	Y1	All	-	I/O, L162P_YY	I/O, L162P_YY
I/O, L162N_YY	6	Y2	All	-	I/O, L162N_YY	I/O, L162N_YY
I/O	6	Y3	-	-	-	I/O
I/O, L161P_YY	6	Y4	All	-	I/O, L161P_YY	I/O, L161P_YY
I/O, VREF Bank 6, L161N_YY	6	Y5	All	All	I/O, VREF Bank 6, L161N_YY	I/O, VREF Bank 6, L161N_YY
I/O	6	Y6	-	-	I/O	I/O
I/O, L160P_YY	6	AA1	All	-	I/O, L160P_YY	I/O, L160P_YY
I/O, L160N_YY	6	AA2	All	-	I/O, L160N_YY	I/O, L160N_YY
I/O, L159P	6	AA3	XC2S600E	-	I/O, L159P	I/O, L159P_Y
I/O, L159N	6	AA4	XC2S600E	-	I/O, L159N	I/O, L159N_Y
I/O	6	Y7	-	-	-	I/O
I/O, L158P	6	AA5	XC2S600E	-	I/O, L158P	I/O, L158P_Y
I/O, VREF Bank 6, L158N	6	AB5	XC2S600E	All	I/O, VREF Bank 6, L158N	I/O, VREF Bank 6, L158N_Y
I/O, L157P	6	AB1	XC2S400E	-	I/O, L157P_Y	I/O, L157P
I/O, L157N	6	AB2	XC2S400E	-	I/O, L157N_Y	I/O, L157N
I/O, L156P	6	AC1	XC2S600E	-	-	I/O, L156P_Y
I/O, L156N	6	AC2	XC2S600E	-	I/O	I/O, L156N_Y
I/O, L155P_YY	6	AC3	All	-	I/O, L155P_YY	I/O, L155P_YY
I/O, L155N_YY	6	AB4	All	-	I/O, L155N_YY	I/O, L155N_YY
I/O, L154P	6	AD1	-	-	-	I/O, L154P
I/O, L154N	6	AD2	-	-	-	I/O, L154N
I/O, L153P_YY	6	AE1	All	-	I/O, L153P_YY	I/O, L153P_YY
I/O, L153N_YY	6	AF2	All	-	I/O, L153N_YY	I/O, L153N_YY
M1	-	AE3	-	-	M1	M1
M0	-	AF3	-	-	M0	M0
M2	-	AD4	-	-	M2	M2

FG676 Pinouts (XC2S400E, XC2S600E) *(Continued)*

Pad Name		Pin	LVDS Async. Output Option	VREF Option	Device-Specific Pinouts	
Function	Bank				XC2S400E	XC2S600E
I/O	5	AC5	-	-	I/O	I/O
I/O, L152N	5	AE4	-	-	I/O	I/O, L152N
I/O, L152P	5	AF4	-	-	-	I/O, L152P
I/O, L151N	5	AE5	-	-	-	I/O, L151N
I/O, L151P	5	AF5	-	-	I/O	I/O, L151P
I/O, L150N	5	AA6	XC2S400E	-	I/O, L150N_Y	I/O, L150N
I/O, L150P	5	AB6	XC2S400E	-	I/O, L150P_Y	I/O, L150P
I/O, L149N_YY	5	AC6	All	-	I/O, L149N_YY	I/O, L149N_YY
I/O, L149P_YY	5	AD6	All	-	I/O, L149P_YY	I/O, L149P_YY
I/O, VREF Bank 5, L148N_YY	5	AE6	All	All	I/O, VREF Bank 5, L148N_YY	I/O, VREF Bank 5, L148N_YY
I/O, L148P_YY	5	AF6	All	-	I/O, L148P_YY	I/O, L148P_YY
I/O, L147N	5	AA7	XC2S600E	-	-	I/O, L147N_Y
I/O, L147P	5	AB7	XC2S600E	-	I/O	I/O, L147P_Y
I/O, L146N_YY	5	AC7	All	-	I/O, L146N_YY	I/O, L146N_YY
I/O, L146P_YY	5	AD7	All	-	I/O, L146P_YY	I/O, L146P_YY
I/O, L145N_YY	5	AE7	All	-	I/O, L145N_YY	I/O, L145N_YY
I/O, L145P_YY	5	AF7	All	-	I/O, L145P_YY	I/O, L145P_YY
I/O, VREF Bank 5, L144N_YY	5	Y8	All	All	I/O, VREF Bank 5, L144N_YY	I/O, VREF Bank 5, L144N_YY
I/O, L144P_YY	5	AA8	All	-	I/O, L144P_YY	I/O, L144P_YY
I/O, L143N_YY	5	AE8	All	-	I/O, L143N_YY	I/O, L143N_YY
I/O, L143P_YY	5	AF8	All	-	I/O, L143P_YY	I/O, L143P_YY
I/O	5	AB8	-	-	I/O	I/O
I/O, L142N	5	W9	XC2S600E	-	I/O, L142N	I/O, L142N_Y
I/O, L142P	5	Y9	XC2S600E	-	I/O, L142P	I/O, L142P_Y
I/O, L141N	5	AA9	XC2S600E	XC2S600E	-	I/O, VREF Bank 5, L141N_Y
I/O, L141P	5	AB9	XC2S600E	-	I/O	I/O, L141P_Y
I/O, L140N_YY	5	AC9	All	-	I/O, L140N_YY	I/O, L140N_YY
I/O, L140P_YY	5	AD9	All	-	I/O, L140P_YY	I/O, L140P_YY
I/O, L139N_YY	5	AE9	All	-	I/O, L139N_YY	I/O, L139N_YY
I/O, L139P_YY	5	AF9	All	-	I/O, L139P_YY	I/O, L139P_YY
I/O, VREF Bank 5, L138N_YY	5	W10	All	All	I/O, VREF Bank 5, L138N_YY	I/O, VREF Bank 5, L138N_YY

FG676 Pinouts (XC2S400E, XC2S600E) *(Continued)*

Pad Name		Pin	LVDS Async. Output Option	VREF Option	Device-Specific Pinouts	
Function	Bank				XC2S400E	XC2S600E
I/O, L138P_YY	5	Y10	All	-	I/O, L138P_YY	I/O, L138P_YY
I/O, L137N_YY	5	AB10	All	-	I/O, L137N_YY	I/O, L137N_YY
I/O, L137P_YY	5	AC10	All	-	I/O, L137P_YY	I/O, L137P_YY
I/O	5	AD10	-	-	-	I/O
I/O, L136N	5	AE10	XC2S600E	-	I/O, L136N	I/O, L136N_Y
I/O, L136P	5	AF10	XC2S600E	-	I/O, L136P	I/O, L136P_Y
I/O	5	AD11	-	-	-	I/O
I/O, L135N_YY	5	W11	All	-	I/O, L135N_YY	I/O, L135N_YY
I/O, L135P_YY	5	Y11	All	-	I/O, L135P_YY	I/O, L135P_YY
I/O, L134N_YY	5	AA11	All	-	I/O, L134N_YY	I/O, L134N_YY
I/O, L134P_YY	5	AB11	All	-	I/O, L134P_YY	I/O, L134P_YY
I/O	5	V12	-	-	-	I/O
I/O, L133N	5	AE11	-	-	I/O, L133N	I/O, L133N
I/O, L133P	5	AF11	-	-	I/O, L133P	I/O, L133P
I/O	5	W12	-	-	-	I/O
I/O, L132N_YY	5	Y12	All	-	I/O, L132N_YY	I/O, L132N_YY
I/O, L132P_YY	5	AA12	All	-	I/O, L132P_YY	I/O, L132P_YY
I/O, VREF Bank 5, L131N_YY	5	AB12	All	All	I/O, VREF Bank 5, L131N_YY	I/O, VREF Bank 5, L131N_YY
I/O, L131P_YY	5	AC12	All	-	I/O, L131P_YY	I/O, L131P_YY
I/O	5	V13	-	-	-	I/O
I/O, L130N_YY	5	AE12	All	-	I/O, L130N_YY	I/O, L130N_YY
I/O, L130P_YY	5	AF12	All	-	I/O, L130P_YY	I/O, L130P_YY
I/O	5	W13	-	-	-	I/O
I/O, L129N	5	Y13	XC2S600E	-	I/O, L129N	I/O, L129N_Y
I/O, L129P	5	AA13	XC2S600E	-	I/O, L129P	I/O, L129P_Y
I/O, VREF Bank 5, L128N	5	AB13	XC2S600E	All	I/O, VREF Bank 5, L128N	I/O, VREF Bank 5, L128N_Y
I/O, L128P	5	AC13	XC2S600E	-	I/O, L128P	I/O, L128P_Y
I/O	5	AD13	-	-	-	I/O
I/O, L127N	5	V14	-	-	I/O	I/O, L127N
I/O, L127P	5	W14	-	-	-	I/O, L127P
I/O (DLL), L126N	5	AE13	-	-	I/O (DLL), L126N	I/O (DLL), L126N
GCK1, I	5	AF13	-	-	GCK1, I	GCK1, I

FG676 Pinouts (XC2S400E, XC2S600E) *(Continued)*

Pad Name		Pin	LVDS Async. Output Option	VREF Option	Device-Specific Pinouts	
Function	Bank				XC2S400E	XC2S600E
GCK0, I	4	AF14	-	-	GCK0, I	GCK0, I
I/O (DLL), L126P	4	AE14	-	-	I/O (DLL), L126P	I/O (DLL), L126P
I/O	4	AD14	-	-	-	I/O
I/O, L125N	4	AC14	-	-	I/O, L125N	I/O, L125N
I/O, L125P	4	AB14	-	-	I/O, L125P	I/O, L125P
I/O	4	AC15	-	-	-	I/O
I/O, L124N	4	AA14	XC2S600E	-	I/O, L124N	I/O, L124N_Y
I/O, VREF Bank 4, L124P	4	Y14	XC2S600E	All	I/O, VREF Bank 4, L124P	I/O, VREF Bank 4, L124P_Y
I/O, L123N	4	AF15	XC2S600E	-	I/O, L123N	I/O, L123N_Y
I/O, L123P	4	AE15	XC2S600E	-	I/O, L123P	I/O, L123P_Y
I/O	4	AB15	-	-	-	I/O
I/O, L122N_YY	4	AA15	All	-	I/O, L122N_YY	I/O, L122N_YY
I/O, L122P_YY	4	Y15	All	-	I/O, L122P_YY	I/O, L122P_YY
I/O	4	AF16	-	-	-	I/O
I/O, L121N_YY	4	W15	All	-	I/O, L121N_YY	I/O, L121N_YY
I/O, VREF Bank 4, L121P_YY	4	V15	All	All	I/O, VREF Bank 4, L121P_YY	I/O, VREF Bank 4, L121P_YY
I/O, L120N_YY	4	AE16	All	-	I/O, L120N_YY	I/O, L120N_YY
I/O, L120P_YY	4	AD16	All	-	I/O, L120P_YY	I/O, L120P_YY
I/O	4	AB16	-	-	-	I/O
I/O, L119N	4	AA16	-	-	I/O, L119N	I/O, L119N
I/O, L119P	4	Y16	-	-	I/O, L119P	I/O, L119P
I/O	4	W16	-	-	-	I/O
I/O, L118N_YY	4	AF17	All	-	I/O, L118N_YY	I/O, L118N_YY
I/O, L118P_YY	4	AE17	All	-	I/O, L118P_YY	I/O, L118P_YY
I/O, L117N_YY	4	AD17	All	-	I/O, L117N_YY	I/O, L117N_YY
I/O, L117P_YY	4	AC17	All	-	I/O, L117P_YY	I/O, L117P_YY
I/O	4	AB17	-	-	-	I/O
I/O, L116N	4	Y17	XC2S600E	-	I/O, L116N	I/O, L116N_Y
I/O, L116P	4	W17	XC2S600E	-	I/O, L116P	I/O, L116P_Y
I/O	4	AF18	-	-	-	I/O
I/O, L115N_YY	4	AE18	All	-	I/O, L115N_YY	I/O, L115N_YY
I/O, L115P_YY	4	AD18	All	-	I/O, L115P_YY	I/O, L115P_YY

FG676 Pinouts (XC2S400E, XC2S600E) *(Continued)*

Pad Name		Pin	LVDS Async. Output Option	VREF Option	Device-Specific Pinouts	
Function	Bank				XC2S400E	XC2S600E
I/O	4	AC18	-	-	I/O	I/O
I/O, VREF Bank 4, L114N	4	AB18	-	All	I/O, VREF Bank 4, L114N	I/O, VREF Bank 4, L114N
I/O, L114P	4	AA18	-	-	I/O, L114P	I/O, L114P
I/O, L113N	4	Y18	-	-	I/O, L113N	I/O, L113N
I/O, L113P	4	W18	-	-	I/O, L113P	I/O, L113P
I/O	4	AB19	-	-	I/O	I/O
I/O, L112N	4	AF19	XC2S600E	-	I/O	I/O, L112N_Y
I/O, L112P	4	AE19	XC2S600E	XC2S600E	-	I/O, VREF Bank 4, L112P_Y
I/O, L111N	4	AA19	XC2S600E	-	I/O, L111N	I/O, L111N_Y
I/O, L111P	4	Y19	XC2S600E	-	I/O, L111P	I/O, L111P_Y
I/O	4	AF20	-	-	-	I/O
I/O, L110N	4	AE20	XC2S600E	-	I/O, L110N	I/O, L110N_Y
I/O, L110P	4	AD20	XC2S600E	-	I/O, L110P	I/O, L110P_Y
I/O	4	AC20	-	-	I/O	I/O
I/O, L109N_YY	4	AB20	All	-	I/O, L109N_YY	I/O, L109N_YY
I/O, VREF Bank 4, L109P_YY	4	AA20	All	All	I/O, VREF Bank 4, L109P_YY	I/O, VREF Bank 4, L109P_YY
I/O	4	Y20	-	-	I/O	I/O
I/O, L108N	4	AF21	-	-	I/O, L108N	I/O, L108N
I/O, L108P	4	AE21	-	-	I/O, L108P	I/O, L108P
I/O, L107N	4	AD21	-	-	I/O, L107N	I/O, L107N
I/O, L107P	4	AC21	-	-	I/O, L107P	I/O, L107P
I/O	4	AC22	-	-	-	I/O
I/O, L106N_YY	4	AF22	All	-	I/O, L106N_YY	I/O, L106N_YY
I/O, VREF Bank 4, L106P_YY	4	AE22	All	All	I/O, VREF Bank 4, L106P_YY	I/O, VREF Bank 4, L106P_YY
I/O, L105N_YY	4	AB21	All	-	I/O, L105N_YY	I/O, L105N_YY
I/O, L105P_YY	4	AA21	All	-	I/O, L105P_YY	I/O, L105P_YY
I/O, L104N_YY	4	AF23	All	-	I/O, L104N_YY	I/O, L104N_YY
I/O, L104P_YY	4	AE23	All	-	I/O, L104P_YY	I/O, L104P_YY
I/O, L103N	4	AD23	XC2S600E	-	I/O	I/O, L103N_Y
I/O, L103P	4	AE24	XC2S600E	-	-	I/O, L103P_Y
I/O, L102N_YY	4	AF24	All	-	I/O, L102N_YY	I/O, L102N_YY
I/O, L102P_YY	4	AF25	All	-	I/O, L102P_YY	I/O, L102P_YY

FG676 Pinouts (XC2S400E, XC2S600E) *(Continued)*

Pad Name		Pin	LVDS Async. Output Option	VREF Option	Device-Specific Pinouts	
Function	Bank				XC2S400E	XC2S600E
DONE	3	AE26	-	-	DONE	DONE
$\overline{\text{PROGRAM}}$	-	AC24	-	-	$\overline{\text{PROGRAM}}$	$\overline{\text{PROGRAM}}$
I/O ($\overline{\text{INIT}}$), L101N_YY	3	AD25	All	-	I/O ($\overline{\text{INIT}}$), L101N_YY	I/O ($\overline{\text{INIT}}$), L101N_YY
I/O (D7), L101P_YY	3	AD26	All	-	I/O (D7), L101P_YY	I/O (D7), L101P_YY
I/O, L100N	3	AC25	-	-	-	I/O, L100N
I/O, L100P	3	AC26	-	-	-	I/O, L100P
I/O, L99N	3	AB22	XC2S600E	-	-	I/O, L99N_Y
I/O, L99P	3	AB23	XC2S600E	-	I/O	I/O, L99P_Y
I/O, L98N_YY	3	AB25	All	-	I/O, L98N_YY	I/O, L98N_YY
I/O, L98P_YY	3	AB26	All	-	I/O, L98P_YY	I/O, L98P_YY
I/O, L97N	3	AA23	-	-	I/O, L97N_Y	I/O, L97N
I/O, L97P	3	AA24	-	-	I/O, L97P_Y	I/O, L97P
I/O, VREF Bank 3, L96N	3	AA25	XC2S600E	All	I/O, VREF Bank 3, L96N	I/O, VREF Bank 3, L96N_Y
I/O, L96P	3	AA26	XC2S600E	-	I/O, L96P	I/O, L96P_Y
I/O, L95N	3	AA22	XC2S600E	-	-	I/O, L95N_Y
I/O, L95P	3	Y22	XC2S600E	-	I/O	I/O, L95P_Y
I/O, L94N	3	Y23	XC2S400E	-	I/O, L94N_Y	I/O, L94N
I/O, L94P	3	Y24	XC2S400E	-	I/O, L94P_Y	I/O, L94P
I/O, L93N	3	Y25	XC2S600E	-	I/O, L93N	I/O, L93N_Y
I/O, L93P	3	Y26	XC2S600E	-	I/O, L93P	I/O, L93P_Y
I/O, VREF Bank 3, L92N_YY	3	W21	All	All	I/O, VREF Bank 3, L92N_YY	I/O, VREF Bank 3, L92N_YY
I/O, L92P_YY	3	W22	All	-	I/O, L92P_YY	I/O, L92P_YY
I/O	3	Y21	-	-	-	I/O
I/O, L91N_YY	3	W25	All	-	I/O, L91N_YY	I/O, L91N_YY
I/O, L91P_YY	3	W26	All	-	I/O, L91P_YY	I/O, L91P_YY
I/O	3	W20	-	-	I/O	I/O
I/O, L90N	3	V19	XC2S400E	-	I/O, L90N_Y	I/O, L90N
I/O, L90P	3	V20	XC2S400E	-	I/O, L90P_Y	I/O, L90P
I/O, L89N	3	V21	XC2S600E	XC2S600E	-	I/O, VREF Bank 3, L89N_Y
I/O, L89P	3	V22	XC2S600E	-	I/O	I/O, L89P_Y
I/O	3	V23	-	-	I/O	I/O
I/O, L88N_YY	3	V24	All	-	I/O, L88N_YY	I/O, L88N_YY

FG676 Pinouts (XC2S400E, XC2S600E) *(Continued)*

Pad Name		Pin	LVDS Async. Output Option	VREF Option	Device-Specific Pinouts	
Function	Bank				XC2S400E	XC2S600E
I/O, L88P_YY	3	V25	All	-	I/O, L88P_YY	I/O, L88P_YY
I/O	3	V26	-	-	I/O	I/O
I/O, VREF Bank 3, L87N_YY	3	U19	All	All	I/O, VREF Bank 3, L87N_YY	I/O, VREF Bank 3, L87N_YY
I/O (D6), L87P_YY	3	U20	All	-	I/O (D6), L87P_YY	I/O (D6), L87P_YY
I/O (D5), L86N_YY	3	U22	All	-	I/O (D5), L86N_YY	I/O (D5), L86N_YY
I/O, L86P_YY	3	U23	All	-	I/O, L86P_YY	I/O, L86P_YY
I/O	3	U24	-	-	-	I/O
I/O, L85N	3	U25	XC2S600E	-	-	I/O, L85N_Y
I/O, L85P	3	U26	XC2S600E	-	I/O	I/O, L85P_Y
I/O	3	R18	-	-	I/O	I/O
I/O, L84N	3	T19	XC2S400E	-	I/O, L84N_Y	I/O, L84N
I/O, L84P	3	T20	XC2S400E	-	I/O, L84P_Y	I/O, L84P
I/O, L83N	3	T21	XC2S600E	-	I/O, L83N	I/O, L83N_Y
I/O, L83P	3	T22	XC2S600E	-	I/O, L83P	I/O, L83P_Y
I/O	3	T24	-	-	-	I/O
I/O, L82N	3	T25	XC2S600E	-	I/O, L82N	I/O, L82N_Y
I/O, L82P	3	T26	XC2S600E	-	I/O, L82P	I/O, L82P_Y
I/O	3	R19	-	-	-	I/O
I/O, L81N	3	R20	XC2S600E	-	I/O, L81N	I/O, L81N_Y
I/O, L81P	3	R21	XC2S600E	-	I/O, L81P	I/O, L81P_Y
I/O, VREF Bank 3, L80N_YY	3	R22	All	All	I/O, VREF Bank 3, L80N_YY	I/O, VREF Bank 3, L80N_YY
I/O (D4), L80P_YY	3	R23	All	-	I/O (D4), L80P_YY	I/O (D4), L80P_YY
I/O	3	P18	-	-	-	I/O
I/O, L79N_YY	3	R25	All	-	I/O, L79N_YY	I/O, L79N_YY
I/O, L79P_YY	3	R26	All	-	I/O, L79P_YY	I/O, L79P_YY
I/O	3	P19	-	-	-	I/O
I/O, L78N	3	P20	XC2S400E	-	I/O, L78N_Y	I/O, L78N
I/O, L78P	3	P21	XC2S400E	-	I/O, L78P_Y	I/O, L78P
I/O, VREF Bank 3, L77N	3	P22	XC2S600E	All	I/O, VREF Bank 3, L77N	I/O, VREF Bank 3, L77N_Y
I/O, L77P	3	P23	XC2S600E	-	I/O, L77P	I/O, L77P_Y
I/O	3	P24	-	-	-	I/O
I/O, L76N_YY	3	P25	All	-	I/O, L76N_YY	I/O, L76N_YY
I/O, L76P_YY	3	P26	All	-	I/O, L76P_YY	I/O, L76P_YY

FG676 Pinouts (XC2S400E, XC2S600E) *(Continued)*

Pad Name		Pin	LVDS Async. Output Option	VREF Option	Device-Specific Pinouts	
Function	Bank				XC2S400E	XC2S600E
I/O	3	N18	-	-	-	I/O
I/O (TRDY)	3	N24	-	-	I/O (TRDY)	I/O (TRDY)
I/O (IRDY), L75N_YY	2	N26	All	-	I/O (IRDY), L75N_YY	I/O (IRDY), L75N_YY
I/O, L75P_YY	2	N25	All	-	I/O, L75P_YY	I/O, L75P_YY
I/O	2	N19	-	-	-	I/O
I/O, L74N	2	N23	XC2S600E	-	-	I/O, L74N_Y
I/O, L74P	2	N22	XC2S600E	-	I/O	I/O, L74P_Y
I/O	2	M23	-	-	I/O	I/O
I/O, L73N	2	N21	XC2S600E	-	I/O, L73N	I/O, L73N_Y
I/O, VREF Bank 2, L73P	2	N20	XC2S600E	All	I/O, VREF Bank 2, L73P	I/O, VREF Bank 2, L73P_Y
I/O, L72N	2	M26	XC2S400E	-	I/O, L72N_Y	I/O, L72N
I/O, L72P	2	M25	XC2S400E	-	I/O, L72P_Y	I/O, L72P
I/O	2	M22	-	-	-	I/O
I/O, L71N_YY	2	M21	All	-	I/O, L71N_YY	I/O, L71N_YY
I/O, L71P_YY	2	M20	All	-	I/O, L71P_YY	I/O, L71P_YY
I/O	2	L26	-	-	-	I/O
I/O (D3), L70N_YY	2	M19	All	-	I/O (D3), L70N_YY	I/O (D3), L70N_YY
I/O, VREF Bank 2, L70P_YY	2	M18	All	All	I/O, VREF Bank 2, L70P_YY	I/O, VREF Bank 2, L70P_YY
I/O, L69N	2	L25	XC2S600E	-	I/O, L69N	I/O, L69N_Y
I/O, L69P	2	L24	XC2S600E	-	I/O, L69P	I/O, L69P_Y
I/O	2	L22	-	-	-	I/O
I/O, L68N	2	L21	XC2S600E	-	I/O, L68N	I/O, L68N_Y
I/O, L68P	2	L20	XC2S600E	-	I/O, L68P	I/O, L68P_Y
I/O	2	L19	-	-	-	I/O
I/O, L67N	2	K26	XC2S600E	-	I/O, L67N	I/O, L67N_Y
I/O, L67P	2	K25	XC2S600E	-	I/O, L67P	I/O, L67P_Y
I/O, L66N	2	K24	-	-	-	I/O, L66N
I/O, L66P	2	K23	-	-	I/O	I/O, L66P
I/O	2	K22	-	-	-	I/O
I/O, L65N	2	K20	XC2S600E	-	I/O	I/O, L65N_Y
I/O, L65P	2	K19	XC2S600E	-	I/O	I/O, L65P_Y
I/O	2	J26	-	-	I/O	I/O

FG676 Pinouts (XC2S400E, XC2S600E) *(Continued)*

Pad Name		Pin	LVDS Async. Output Option	VREF Option	Device-Specific Pinouts	
Function	Bank				XC2S400E	XC2S600E
I/O, L64N_YY	2	J25	All	-	I/O, L64N_YY	I/O, L64N_YY
I/O (D2), L64P_YY	2	J24	All	-	I/O (D2), L64P_YY	I/O (D2), L64P_YY
I/O (D1)	2	J23	-	-	I/O (D1)	I/O (D1)
I/O, VREF Bank 2, L63N_YY	2	J22	All	All	I/O, VREF Bank 2, L63N_YY	I/O, VREF Bank 2, L63N_YY
I/O, L63P_YY	2	J21	All	-	I/O, L63P_YY	I/O, L63P_YY
I/O, L62N_YY	2	J20	All	-	I/O, L62N_YY	I/O, L62N_YY
I/O, L62P_YY	2	J19	All	-	I/O, L62P_YY	I/O, L62P_YY
I/O	2	H22	-	-	I/O	I/O
I/O, L61N	2	H26	XC2S600E	-	I/O	I/O, L61N_Y
I/O, L61P	2	H25	XC2S600E	XC2S600E	-	I/O, VREF Bank 2, L61P_Y
I/O, L60N	2	H21	XC2S400E	-	I/O, L60N_Y	I/O, L60N
I/O, L60P	2	H20	XC2S400E	-	I/O, L60P_Y	I/O, L60P
I/O	2	G26	-	-	-	I/O
I/O, L59N_YY	2	G25	All	-	I/O, L59N_YY	I/O, L59N_YY
I/O, L59P_YY	2	G24	All	-	I/O, L59P_YY	I/O, L59P_YY
I/O	2	G23	-	-	I/O	I/O
I/O, L58N_YY	2	G22	All	-	I/O, L58N_YY	I/O, L58N_YY
I/O, VREF Bank 2, L58P_YY	2	G21	All	All	I/O, VREF Bank 2, L58P_YY	I/O, VREF Bank 2, L58P_YY
I/O	2	G20	-	-	I/O	I/O
I/O, L57N_YY	2	F26	All	-	I/O, L57N_YY	I/O, L57N_YY
I/O, L57P_YY	2	F25	All	-	I/O, L57P_YY	I/O, L57P_YY
I/O, L56N	2	F24	XC2S600E	-	I/O, L56N	I/O, L56N_Y
I/O, L56P	2	F23	XC2S600E	-	I/O, L56P	I/O, L56P_Y
I/O	2	F22	-	-	-	I/O
I/O, L55N	2	E26	XC2S600E	-	I/O, L55N	I/O, L55N_Y
I/O, VREF Bank 2, L55P	2	E25	XC2S600E	All	I/O, VREF Bank 2, L55P	I/O, VREF Bank 2, L55P_Y
I/O, L54N	2	E23	XC2S400E	-	I/O, L54N_Y	I/O, L54N
I/O, L54P	2	E22	XC2S400E	-	I/O, L54P_Y	I/O, L54P
I/O, L53N_YY	2	F21	All	-	I/O, L53N_YY	I/O, L53N_YY
I/O, L53P_YY	2	E21	All	-	I/O, L53P_YY	I/O, L53P_YY
I/O, L52N	2	D26	XC2S600E	-	I/O	I/O, L52N_Y
I/O, L52P	2	D25	XC2S600E	-	-	I/O, L52P_Y

FG676 Pinouts (XC2S400E, XC2S600E) *(Continued)*

Pad Name		Pin	LVDS Async. Output Option	VREF Option	Device-Specific Pinouts	
Function	Bank				XC2S400E	XC2S600E
I/O, L51N	2	D24	-	-	-	I/O, L51N
I/O, L51P	2	C25	-	-	-	I/O, L51P
I/O (DIN, D0), L50N_YY	2	C26	All	-	I/O (DIN, D0), L50N_YY	I/O (DIN, D0), L50N_YY
I/O (DOUT, BUSY), L50P_YY	2	B26	All	-	I/O (DOUT, BUSY), L50P_YY	I/O (DOUT, BUSY), L50P_YY
CCLK	2	A25	-	-	CCLK	CCLK
TDO	2	C23	-	-	TDO	TDO
TDI	-	D22	-	-	TDI	TDI
I/O ($\overline{CS}$), L49P_YY	1	B24	All	-	I/O ($\overline{CS}$), L49P_YY	I/O ($\overline{CS}$), L49P_YY
I/O ($\overline{WRITE}$), L49N_YY	1	A24	All	-	I/O ($\overline{WRITE}$), L49N_YY	I/O ($\overline{WRITE}$), L49N_YY
I/O, L48P	1	B23	-	-	I/O	I/O, L48P
I/O, L48N	1	A23	-	-	-	I/O, L48N
I/O, L47P	1	B22	XC2S400E	-	I/O, L47P_Y	I/O, L47P
I/O, L47N	1	A22	XC2S400E	-	I/O, L47N_Y	I/O, L47N
I/O, L46P_YY	1	D21	All	-	I/O, L46P_YY	I/O, L46P_YY
I/O, L46N_YY	1	C21	All	-	I/O, L46N_YY	I/O, L46N_YY
I/O, VREF Bank 1, L45P_YY	1	B21	All	All	I/O, VREF Bank 1, L45P_YY	I/O, VREF Bank 1, L45P_YY
I/O, L45N_YY	1	A21	All	-	I/O, L45N_YY	I/O, L45N_YY
I/O, L44P	1	F20	XC2S600E	-	-	I/O, L44P_Y
I/O, L44N	1	E20	XC2S600E	-	I/O	I/O, L44N_Y
I/O, L43P_YY	1	D20	All	-	I/O, L43P_YY	I/O, L43P_YY
I/O, L43N_YY	1	C20	All	-	I/O, L43N_YY	I/O, L43N_YY
I/O, L42P_YY	1	B20	All	-	I/O, L42P_YY	I/O, L42P_YY
I/O, L42N_YY	1	A20	All	-	I/O, L42N_YY	I/O, L42N_YY
I/O, VREF Bank 1, L41P_YY	1	G19	All	All	I/O, VREF Bank 1, L41P_YY	I/O, VREF Bank 1, L41P_YY
I/O, L41N_YY	1	F19	All	-	I/O, L41N_YY	I/O, L41N_YY
I/O	1	E19	-	-	-	I/O
I/O, L40P_YY	1	B19	All	-	I/O, L40P_YY	I/O, L40P_YY
I/O, L40N_YY	1	A19	All	-	I/O, L40N_YY	I/O, L40N_YY
I/O	1	H18	-	-	I/O	I/O
I/O, L39P	1	G18	XC2S600E	-	I/O, L39P	I/O, L39P_Y

FG676 Pinouts (XC2S400E, XC2S600E) *(Continued)*

Pad Name		Pin	LVDS Async. Output Option	VREF Option	Device-Specific Pinouts	
Function	Bank				XC2S400E	XC2S600E
I/O, L39N	1	F18	XC2S600E	-	I/O, L39N	I/O, L39N_Y
I/O, L38P	1	D18	XC2S600E	XC2S600E	-	I/O, VREF Bank 1, L38P_Y
I/O, L38N	1	C18	XC2S600E	-	I/O	I/O, L38N_Y
I/O, L37P_YY	1	B18	All	-	I/O, L37P_YY	I/O, L37P_YY
I/O, L37N_YY	1	A18	All	-	I/O, L37N_YY	I/O, L37N_YY
I/O, L36P_YY	1	H17	All	-	I/O, L36P_YY	I/O, L36P_YY
I/O, L36N_YY	1	G17	All	-	I/O, L36N_YY	I/O, L36N_YY
I/O, VREF Bank 1, L35P_YY	1	E18	All	All	I/O, VREF Bank 1, L35P_YY	I/O, VREF Bank 1, L35P_YY
I/O, L35N_YY	1	E17	All	-	I/O, L35N_YY	I/O, L35N_YY
I/O, L34P_YY	1	D17	All	-	I/O, L34P_YY	I/O, L34P_YY
I/O, L34N_YY	1	C17	All	-	I/O, L34N_YY	I/O, L34N_YY
I/O	1	H16	-	-	-	I/O
I/O, L33P	1	B17	XC2S600E	-	I/O, L33P	I/O, L33P_Y
I/O, L33N	1	A17	XC2S600E	-	I/O, L33N	I/O, L33N_Y
I/O	1	G16	-	-	-	I/O
I/O, L32P_YY	1	F16	All	-	I/O, L32P_YY	I/O, L32P_YY
I/O, L32N_YY	1	E16	All	-	I/O, L32N_YY	I/O, L32N_YY
I/O, L31P_YY	1	C16	All	-	I/O, L31P_YY	I/O, L31P_YY
I/O, L31N_YY	1	B16	All	-	I/O, L31N_YY	I/O, L31N_YY
I/O	1	A16	-	-	-	I/O
I/O, L30P	1	J15	-	-	I/O, L30P	I/O, L30P
I/O, L30N	1	H15	-	-	I/O, L30N	I/O, L30N
I/O	1	G15	-	-	-	I/O
I/O, L29P_YY	1	F15	All	-	I/O, L29P_YY	I/O, L29P_YY
I/O, L29N_YY	1	E15	All	-	I/O, L29N_YY	I/O, L29N_YY
I/O, VREF Bank 1, L28P_YY	1	B15	All	All	I/O, VREF Bank 1, L28P_YY	I/O, VREF Bank 1, L28P_YY
I/O, L28N_YY	1	A15	All	-	I/O, L28N_YY	I/O, L28N_YY
I/O	1	D15	-	-	-	I/O
I/O, L27P_YY	1	J14	All	-	I/O, L27P_YY	I/O, L27P_YY
I/O, L27N_YY	1	H14	All	-	I/O, L27N_YY	I/O, L27N_YY
I/O	1	G14	-	-	-	I/O
I/O, L26P	1	F14	XC2S600E	-	I/O, L26P	I/O, L26P_Y
I/O, L26N	1	E14	XC2S600E	-	I/O, L26N	I/O, L26N_Y

FG676 Pinouts (XC2S400E, XC2S600E) *(Continued)*

Pad Name		Pin	LVDS Async. Output Option	VREF Option	Device-Specific Pinouts	
Function	Bank				XC2S400E	XC2S600E
I/O, VREF Bank 1, L25P	1	D14	XC2S600E	All	I/O, VREF Bank 1, L25P	I/O, VREF Bank 1, L25P_Y
I/O, L25N	1	C14	XC2S600E	-	I/O, L25N	I/O, L25N_Y
I/O	1	J13	-	-	-	I/O
I/O, L24P	1	C13	-	-	I/O, L24P	I/O, L24P
I/O, L24N	1	D13	-	-	I/O, L24N	I/O, L24N
I/O	1	H13	-	-	-	I/O
I/O (DLL), L23P	1	B14	-	-	I/O (DLL), L23P	I/O (DLL), L23P
GCK2, I	1	A14	-	-	GCK2, I	GCK2, I
GCK3, I	0	A13	-	-	GCK3, I	GCK3, I
I/O (DLL), L23N	0	B13	-	-	I/O (DLL), L23N	I/O (DLL), L23N
I/O	0	E13	-	-	-	I/O
I/O, L22P_YY	0	F13	All	-	I/O, L22P_YY	I/O, L22P_YY
I/O, L22N_YY	0	G13	All	-	I/O, L22N_YY	I/O, L22N_YY
I/O, L21P	0	A12	XC2S600E	-	-	I/O, L21P_Y
I/O, VREF Bank 0, L21N	0	B12	XC2S600E	All	I/O, VREF Bank 0	I/O, VREF Bank 0, L21N_Y
I/O, L20P	0	D12	XC2S600E	-	I/O, L20P	I/O, L20P_Y
I/O, L20N	0	E12	XC2S600E	-	I/O, L20N	I/O, L20N_Y
I/O	0	F12	-	-	-	I/O
I/O, L19P_YY	0	G12	All	-	I/O, L19P_YY	I/O, L19P_YY
I/O, L19N_YY	0	H12	All	-	I/O, L19N_YY	I/O, L19N_YY
I/O	0	J12	-	-	-	I/O
I/O, L18P_YY	0	A11	All	-	I/O, L18P_YY	I/O, L18P_YY
I/O, VREF Bank 0, L18N_YY	0	B11	All	All	I/O, VREF Bank 0, L18N_YY	I/O, VREF Bank 0, L18N_YY
I/O, L17P_YY	0	E11	All	-	I/O, L17P_YY	I/O, L17P_YY
I/O, L17N_YY	0	F11	All	-	I/O, L17N_YY	I/O, L17N_YY
I/O	0	C11	-	-	-	I/O
I/O, L16P	0	G11	-	-	I/O, L16P	I/O, L16P
I/O, L16N	0	H11	-	-	I/O, L16N	I/O, L16N
I/O	0	C10	-	-	-	I/O
I/O, L15P_YY	0	A10	All	-	I/O, L15P_YY	I/O, L15P_YY
I/O, L15N_YY	0	B10	All	-	I/O, L15N_YY	I/O, L15N_YY
I/O, L14P_YY	0	D10	All	-	I/O, L14P_YY	I/O, L14P_YY

FG676 Pinouts (XC2S400E, XC2S600E) *(Continued)*

Pad Name		Pin	LVDS Async. Output Option	VREF Option	Device-Specific Pinouts	
Function	Bank				XC2S400E	XC2S600E
I/O, L14N_YY	0	E10	All	-	I/O, L14N_YY	I/O, L14N_YY
I/O	0	G10	-	-	-	I/O
I/O, L13P	0	A9	XC2S600E	-	I/O, L13P	I/O, L13P_Y
I/O, L13N	0	B9	XC2S600E	-	I/O, L13N	I/O, L13N_Y
I/O	0	H10	-	-	-	I/O
I/O, L12P_YY	0	C9	All	-	I/O, L12P_YY	I/O, L12P_YY
I/O, L12N_YY	0	D9	All	-	I/O, L12N_YY	I/O, L12N_YY
I/O	0	E9	-	-	I/O	I/O
I/O, VREF Bank 0, L11P	0	F9	-	All	I/O, VREF Bank 0, L11P	I/O, VREF Bank 0, L11P
I/O, L11N	0	G9	-	-	I/O, L11N	I/O, L11N
I/O, L10P	0	A8	-	-	I/O, L10P	I/O, L10P
I/O, L10N	0	B8	-	-	I/O, L10N	I/O, L10N
I/O	0	H9	-	-	I/O	I/O
I/O, L9P	0	E8	XC2S600E	-	I/O	I/O, L9P_Y
I/O, L9N	0	F8	XC2S600E	XC2S600E	-	I/O, VREF Bank 0, L9N_Y
I/O, L8P	0	A7	XC2S600E	-	I/O, L8P	I/O, L8P_Y
I/O, L8N	0	B7	XC2S600E	-	I/O, L8N	I/O, L8N_Y
I/O	0	G8	-	-	I/O	I/O
I/O, L7P_YY	0	C7	All	-	I/O, L7P_YY	I/O, L7P_YY
I/O, L7N_YY	0	D7	All	-	I/O, L7N_YY	I/O, L7N_YY
I/O	0	E7	-	-	-	I/O
I/O, L6P_YY	0	F7	All	-	I/O, L6P_YY	I/O, L6P_YY
I/O, VREF Bank 0, L6N_YY	0	G7	All	All	I/O, VREF Bank 0, L6N_YY	I/O, VREF Bank 0, L6N_YY
I/O	0	A6	-	-	I/O	I/O
I/O, L5P	0	B6	-	-	I/O, L5P	I/O, L5P
I/O, L5N	0	C6	-	-	I/O, L5N	I/O, L5N
I/O, L4P	0	D6	-	-	I/O, L4P	I/O, L4P
I/O, L4N	0	E6	-	-	I/O, L4N	I/O, L4N
I/O	0	F6	-	-	-	I/O
I/O, L3P_YY	0	A5	All	-	I/O, L3P_YY	I/O, L3P_YY
I/O, VREF Bank 0, L3N_YY	0	B5	All	All	I/O, VREF Bank 0, L3N_YY	I/O, VREF Bank 0, L3N_YY
I/O, L2P_YY	0	D5	All	-	I/O, L2P_YY	I/O, L2P_YY

FG676 Pinouts (XC2S400E, XC2S600E) *(Continued)*

Pad Name		Pin	LVDS Async. Output Option	VREF Option	Device-Specific Pinouts	
Function	Bank				XC2S400E	XC2S600E
I/O, L2N_YY	0	E5	All	-	I/O, L2N_YY	I/O, L2N_YY
I/O, L1P_YY	0	B4	All	-	I/O, L1P_YY	I/O, L1P_YY
I/O, L1N_YY	0	C4	All	-	I/O, L1N_YY	I/O, L1N_YY
I/O, L0P	0	A3	XC2S600E	-	I/O	I/O, L0P_Y
I/O, L0N	0	B3	XC2S600E	-	-	I/O, L0N_Y
I/O	0	A4	-	-	I/O	I/O
TCK	-	A2	-	-	TCK	TCK

FG676 Differential Clock Pins

Clock	Bank	P Input		N Input	
		Pin	Name	Pin	Name
GCK0	4	AF14	GCK0, I	AE14	I/O (DLL), L126P
GCK1	5	AF13	GCK1, I	AE13	I/O (DLL), L126N
GCK2	1	A14	GCK2, I	B14	I/O (DLL), L23P
GCK3	0	A13	GCK3, I	B13	I/O (DLL), L23N

Additional FG676 Package Pins

VCCINT Pins						
H8	H19	J9	J18	K10	K11	K16
K17	L10	L17	T10	T17	U10	U11
U16	U17	V9	V18	W8	W19	-
VCCO Bank 0 Pins						
C5	C8	D11	J10	J11	K12	K13
VCCO Bank 1 Pins						
C19	C22	D16	J16	J17	K14	K15
VCCO Bank 2 Pins						
E24	H24	K18	L18	L23	M17	N17
VCCO Bank 3 Pins						
P17	R17	T18	T23	U18	W24	AB24
VCCO Bank 4 Pins						
U14	U15	V16	V17	AC16	AD19	AD22
VCCO Bank 5 Pins						
U12	U13	V10	V11	AC11	AD5	AD8
VCCO Bank 6 Pins						
P10	R10	T4	T9	U9	W3	AB3
VCCO Bank 7 Pins						
H3	K9	L4	L9	M10	N10	E3

Additional FG676 Package Pins *(Continued)*

GND Pins						
A1	A26	B2	B25	C3	C12	C15
C24	D4	D8	D19	D23	F10	F17
H4	H23	K6	K21	L11	L12	L13
L14	L15	L16	M3	M11	M12	M13
M14	M15	M16	M24	N11	N12	N13
N14	N15	N16	P11	P12	P13	P14
P15	P16	R3	R11	R12	R13	R14
R15	R16	R24	T11	T12	T13	T14
T15	T16	U6	U21	W4	W23	AA10
AA17	AC4	AC8	AC19	AC23	AD3	AD12
AD15	AD24	AE2	AE25	AF1	AF26	-
Not Connected Pins (XC2S400E Only)						
A12	A16	A23	B3	C1	C2	C10
C11	C25	D2	D15	D18	D24	D25
E7	E13	E19	F2	F6	F8	F12
F20	F22	G10	G14	G15	G16	G26
H10	H13	H16	H25	J6	J8	J12
J13	K1	K4	K22	K24	L3	L19
L22	L26	M4	M9	M22	N1	N4
N9	N18	N19	N23	P4	P5	P18
P19	P24	R4	R7	R19	T3	T24
U1	U4	U7	U24	U25	V8	V12
V13	V21	W12	W13	W14	W16	Y3
Y7	Y21	AA7	AA9	AA22	AB15	AB16
AB17	AB22	AC1	AC15	AC22	AC25	AC26
AD1	AD2	AD10	AD11	AD13	AD14	AE5
AE19	AE24	AF4	AF16	AF18	AF20	-

Revision History

Version No.	Date	Description
1.0	11/15/01	Initial Xilinx release.
1.1	12/20/01	Corrected differential pin pair designations.
2.0	11/18/02	Added XC2S400E and XC2S600E and FG676. Removed L37 designation from FT256 pinouts. Minor corrections and clarifications to pinout definitions. Removed Preliminary designation.
2.1	02/14/03	Added differential pairs table on page 57, fixed 3 P/N designation typos introduced in v2.0. Clarified that XC2S50E has two VREF pins per bank.
2.3	06/18/08	Added Package Overview section. Updated all modules for continuous page, figure, and table numbering. Updated links. Synchronized all modules to v2.3.