FEATURES

- **Low Differential Gain and Phase (D_G = 0.82%, D_P = 0.1 Degree Typ)**
- **Wide Bandwidth (BW = 300 MHz Min)**
- **Low Crosstalk (X_{TALK} = –80 dB Typ)**
- **Low Power Consumption (I_{CC} = 10 μA Max)**
- **Bidirectional Data Flow With Near-Zero Propagation Delay**
- **Low ON-State Resistance (r_{on} = 3 Ω Typ)**
- **Rail-to-Rail Switching on Data I/O Ports (0 to V_{CC})**
- **V_{CC} Operating Range From 3 V to 3.6 V**
- **I_{off} Supports Partial-Power-Down Mode Operation**
- **Data and Control Inputs Provide Undershoot Clamp Diode**
- **Latch-Up Performance Exceeds 100 mA Per JESD 78, Class II**
- **ESD Performance Tested Per JESD 22**
  - **2000-V Human-Body Model (A114-B, Class II)**
  - **1000-V Charged-Device Model (C101)**
- **Suitable for Both RGB and Composite-Video Switching**

D, DBQ, DGV, OR PW PACKAGE (TOP VIEW)

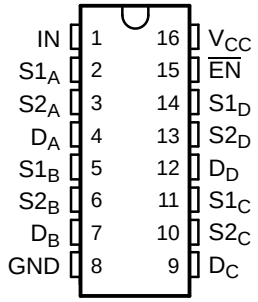

RGY PACKAGE (TOP VIEW)

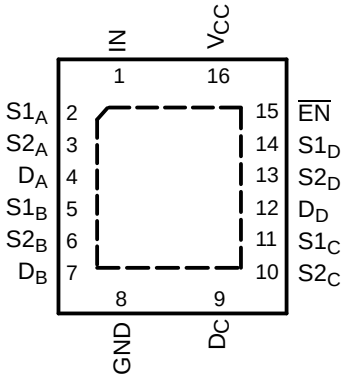

DESCRIPTION/ORDERING INFORMATION

The TS3V330 video switch is a 4-bit 1-of-2 multiplexer/demultiplexer, with a single switch-enable ($\overline{EN}$) input. When $\overline{EN}$ is low, the switch is enabled and the D port is connected to the S port. When $\overline{EN}$ is high, the switch is disabled and the high-impedance state exists between the D and S ports. The select (IN) input controls the data path of the multiplexer/demultiplexer.

Low differential gain and phase make this switch ideal for composite and RGB video applications. This device has wide bandwidth and low crosstalk, making it suitable for high-frequency applications as well.

ORDERING INFORMATION

T_A	PACKAGE(1)		ORDERABLE PART NUMBER	TOP-SIDE MARKING
–40°C to 85°C	QFN – RGY	Tape and reel	TS3V330RGYR	TF330
	SOIC – D	Tube	TS3V330D	TS3V330
		Tape and reel	TS3V330DR	
	SSOP (QSOP) – DBQ	Tape and reel	TS3V330DBQR	TF330
	TSSOP – PW	Tube	TS3V330PW	TF330
		Tape and reel	TS3V330PWR	
	TVSOP – DGV	Tape and reel	TS3V330DGVR	TF330

(1) Package drawings, standard packing quantities, thermal data, symbolization, and PCB design guidelines are available at www.ti.com/sc/package.

Please be aware that an important notice concerning availability, standard warranty, and use in critical applications of Texas Instruments semiconductor products and disclaimers thereto appears at the end of this data sheet.

PRODUCTION DATA information is current as of publication date. Products conform to specifications per the terms of the Texas Instruments standard warranty. Production processing does not necessarily include testing of all parameters.

Copyright © 2004–2005, Texas Instruments Incorporated

DESCRIPTION/ORDERING INFORMATION

This device is fully specified for partial-power-down applications using I_{off}. The I_{off} feature ensures that damaging current will not backflow through the device when it is powered down. This switch maintains isolation during power off.

To ensure the high-impedance state during power up or power down, $\overline{EN}$ should be tied to V_{CC} through a pullup resistor; the minimum value of the resistor is determined by the current-sinking capability of the driver.

FUNCTION TABLE

INPUTS		INPUT/OUTPUT D	FUNCTION
$\overline{EN}$	IN		
L	L	S1	D port = S1 port
L	H	S2	D port = S2 port
H	X	Z	Disconnect

PIN DESCRIPTION

NAME	DESCRIPTION
S1, S2	Analog video I/Os
D	Analog video I/Os
IN	Select input
$\overline{EN}$	Switch-enable input

PARAMETER DEFINITIONS

PARAMETER	DESCRIPTION
R_{on}	Resistance between the D and S ports, with the switch in the ON state
I_{OZ}	Output leakage current measured at the D and S ports, with the switch in the OFF state
I_{OS}	Short-circuit current measured at the I/O pins
V_{IN}	Voltage at IN
V_{EN}	Voltage at $\overline{EN}$
C_{IN}	Capacitance at the control ($\overline{EN}$, IN) inputs
C_{OFF}	Capacitance at the analog I/O port when the switch is OFF
C_{ON}	Capacitance at the analog I/O port when the switch is ON
V_{IH}	Minimum input voltage for logic high for the control ($\overline{EN}$, IN) inputs
V_{IL}	Minimum input voltage for logic low for the control ($\overline{EN}$, IN) inputs
V_H	Hysteresis voltage at the control ($\overline{EN}$, IN) inputs
V_{IK}	I/O and control ($\overline{EN}$, IN) inputs diode clamp voltage
V_I	Voltage applied to the D or S pins when D or S is the switch input
V_O	Voltage applied to the D or S pins when D or S is the switch output
I_{IH}	Input high leakage current of the control ($\overline{EN}$, IN) inputs
I_{IL}	Input low leakage current of the control ($\overline{EN}$, IN) inputs
I_I	Current into the D or S pins when D or S is the switch input
I_O	Current into the D or S pins when D or S is the switch output
I_{off}	Output leakage current measured at the D or S ports, with $V_{CC} = 0$
t_{ON}	Propagation delay measured between 50% of the digital input to 90% of the analog output when switch is turned ON
t_{OFF}	Propagation delay measured between 50% of the digital input to 90% of the analog output when switch is turned OFF
BW	Frequency response of the switch in the ON state measured at –3 dB
X_{TALK}	Unwanted signal coupled from channel to channel. Measured in –dB. $X_{TALK} = 20 \log V_O/V_I$. This is a nonadjacent crosstalk.
O_{IRR}	Off isolation is the resistance (measured in –dB) between the input and output with the switch OFF.
D_G	Magnitude variation between analog input and output pins when the switch is ON and the dc offset of composite-video signal varies at the analog input pin. In the NTSC standard, the frequency of the video signal is 3.58 MHz, and dc offset is from 0 to 0.714 V.
D_P	Phase variation between analog input and output pins when the switch is ON and the dc offset of composite-video signal varies at the analog input pin. In the NTSC standard, the frequency of the video signal is 3.58 MHz, and dc offset is from 0 to 0.714 V.
I_{CC}	Static power-supply current
I_{CCD}	Variation of I_{CC} for a change in frequency in the control ($\overline{EN}$, IN) inputs
ΔI_{CC}	This is the increase in supply current for each control input that is at the specified voltage level, rather than V_{CC} or GND.

FUNCTIONAL DIAGRAM (POSITIVE LOGIC)

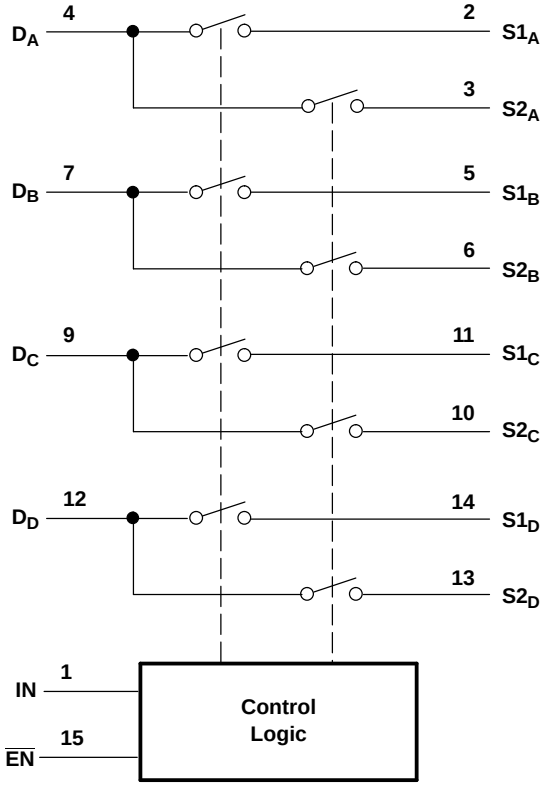

Absolute Maximum Ratings[1]

over operating free-air temperature range (unless otherwise noted)

			MIN	MAX	UNIT
V_{CC}	Supply voltage range		–0.5	4.6	V
V_{IN}	Control input voltage range[2][3]		–0.5	4.6	V
$V_{I/O}$	Switch I/O voltage range[2][3][4]		–0.5	4.6	V
I_{IK}	Control input clamp current	$V_{IN} < 0$		–50	mA
$I_{I/OK}$	I/O port clamp current	$V_{I/O} < 0$		–50	mA
$I_{I/O}$	ON-state switch current[5]			±128	mA
	Continuous current through V_{CC} or GND			±100	mA
θ_{JA}	Package thermal impedance	D package[6]		73	C/W
		DBQ package[6]		90	
		DGV package		120	
		PW package[6]		108	
		RGY package[7]		39	
T_{stg}	Storage temperature range		–65	150	C

(1) Stresses beyond those listed under "absolute maximum ratings" may cause permanent damage to the device. These are stress ratings only, and functional operation of the device at these or any other conditions beyond those indicated under "recommended operating conditions" is not implied. Exposure to absolute-maximum-rated conditions for extended periods may affect device reliability.
(2) All voltages are with respect to ground, unless otherwise specified.
(3) The input and output voltage ratings may be exceeded if the input and output clamp-current ratings are observed.
(4) V_I and V_O are used to denote specific conditions for $V_{I/O}$.
(5) I_I and I_O are used to denote specific conditions for $I_{I/O}$.
(6) The package thermal impedance is calculated in accordance with JESD 51-7.
(7) The package thermal impedance is calculated in accordance with JESD 51-5.

Recommended Operating Conditions[1]

		MIN	MAX	UNIT
V_{CC}	Supply voltage	3	3.6	V
V_{IH}	High-level control input voltage (EN, IN)	2	V_{CC}	V
V_{IL}	Low-level control input voltage (EN, IN)	0	0.8	V
V_{ANALOG}	Analog I/O voltage	0	V_{CC}	V
T_A	Operating free-air temperature	–40	85	°C

(1) All unused control inputs of the device must be held at V_{CC} or GND to ensure proper device operation. Refer to the TI application report, *Implications of Slow or Floating CMOS Inputs*, literature number SCBA004.

Electrical Characteristics

over recommended operating free-air temperature range, V_{CC} = 3.3 V ± 0.3 V (unless otherwise noted)

PARAMETER		TEST CONDITIONS(1)				MIN	TYP(2)	MAX	UNIT
V_{IK}	$\overline{EN}$, IN	V_{CC} = 3 V,	I_{IN} = –18 mA					–1.8	V
V_{hys}	$\overline{EN}$, IN						150		mV
I_{IH}	$\overline{EN}$, IN	V_{CC} = 3.6 V,	V_{IN} and V_{EN} = V_{CC}					±1	µA
I_{IL}	$\overline{EN}$, IN	V_{CC} = 3.6 V,	V_{IN} and V_{EN} = GND					±1	µA
I_{OZ}(3)		V_{CC} = 3.6 V,	V_O = 0 to 3.6 V,	V_I = 0,	Switch OFF			±1	µA
I_{OS}(4)		V_{CC} = 3.6 V,	V_O = 0.5 V_{CC},	V_I = 0,	Switch ON	50			mA
I_{off}		V_{CC} = 0 V,	V_O = 0 to 3.6 V,	V_I = 0				15	µA
I_{CC}		V_{CC} = 3.6 V,	$I_{I/O}$ = 0,	Switch ON or OFF				10	µA
ΔI_{CC}	$\overline{EN}$, IN	V_{CC} = 3.6 V,	One input at 3.4 V,	Other inputs at V_{CC} or GND				750	µA
I_{CCD}		V_{CC} = 3.6 V, V_{IN} input switching 50% duty cycle	V_{EN} = GND	D and S ports open,				0.45	mA/MHz
C_{IN}	$\overline{EN}$, IN	V_{IN} of V_{EN} = 0,	f = 1 MHz				3.5		pF
C_{OFF}	D port	V_I = 0,	f = 1 MHz,	Outputs open,	Switch OFF		10		pF
	S port						5		
C_{ON}		V_I = 0,	f = 1 MHz,	Outputs open,	Switch ON		17		pF
r_{on}(5)		V_{CC} = 3 V	V_I = 1 V,	I_O = 13 mA,	R_L = 75 Ω		5	7	Ω
			V_I = 2 V,	I_O = 26 mA,	R_L = 75 Ω		7	10	

(1) V_I, V_O, I_I, and I_O refer to I/O pins.
(2) All typical values are at V_{CC} = 5 V (unless otherwise noted), T_A = 25°C.
(3) For I/O ports, I_{OZ} includes the input leakage current.
(4) The I_{OS} test is applicable to only one ON channel at a time. The duration of this test is less than one second.
(5) Measured by the voltage drop between the D and S terminals at the indicated current through the switch. ON-state resistance is determined by the lower of the voltages of the two (D or S) terminals.

Switching Characteristics

over recommended operating free-air temperature range, V_{CC} = 3.3 V ± 0.3 V, R_L = 75 Ω, C_L = 20 pF (unless otherwise noted) (see Figure 5)

PARAMETER	FROM (INPUT)	TO (OUTPUT)	MIN	TYP	MAX	UNIT
t_{ON}	S	D		2.5	6.5	ns
t_{OFF}	S	D		1.1	3.5	ns

Dynamic Characteristics

over recommended operating free-air temperature range, V_{CC} = 3.3 V ± 0.3 V (unless otherwise noted)

PARAMETER	TEST CONDITIONS			TYP(1)	UNIT
D_G(2)	R_L = 150 Ω,	f = 3.58 MHz,	See Figure 6	0.82	%
D_P(2)	R_L = 150 Ω,	f = 3.58 MHz,	See Figure 6	0.1	Deg
BW	R_L = 150 Ω,	See Figure 7		300	MHz
X_{TALK}	R_L = 150 Ω,	f = 10 MHz,	RIN = 10 Ω, See Figure 8	–80	dB
O_{IRR}	R_L = 150 Ω,	f = 10 MHz,	See Figure 9	–50	dB

(1) All typical values are at V_{CC} = 5 V (unless otherwise noted), T_A = 25°C.
(2) D_G and D_P are expressed in absolute magnitude.

TYPICAL CHARACTERISTICS

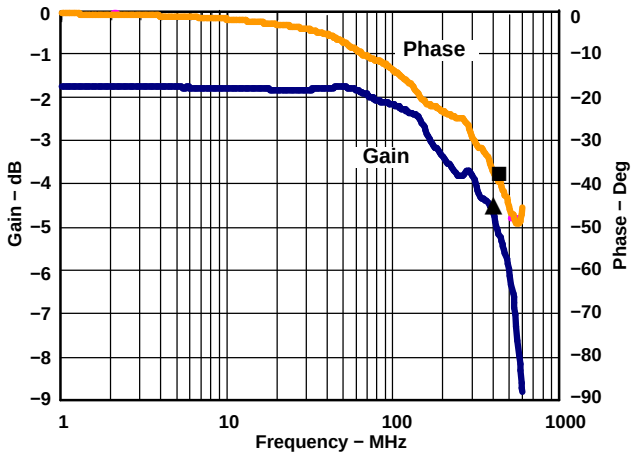

▲ Gain 3 dB at 400 MHz

■ Phase at 3-dB Frequency, −38.28 Degrees

Figure 1. Gain/Phase vs Frequency

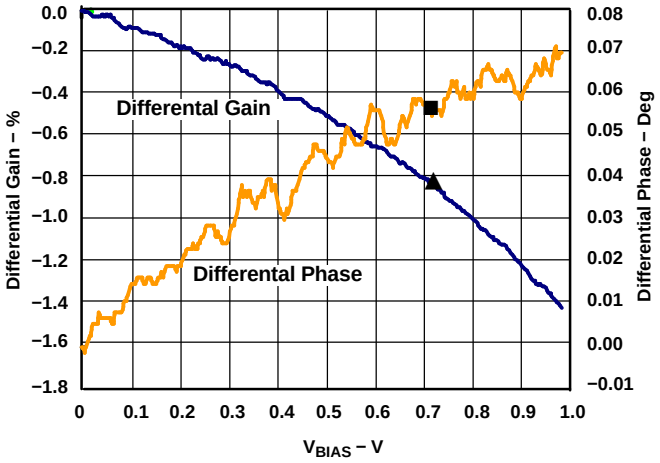

▲ Differential Gain at 0.714 V, −0.81%

■ Differential Phase at 0.714 V, 0.06 Degree

Figure 2. Differential Gain/Phase vs V_{BIAS}

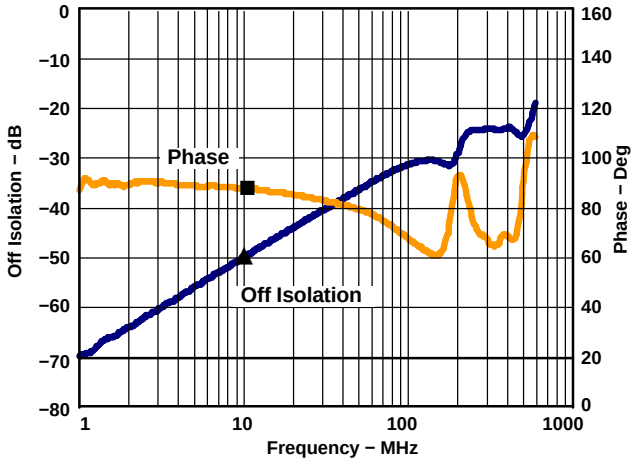

▲ Off Isolation at 10 Mhz, −50.08 dB

■ Phase at 10 MHz, 87.8 Degrees

Figure 3. Off Isolation vs Frequency

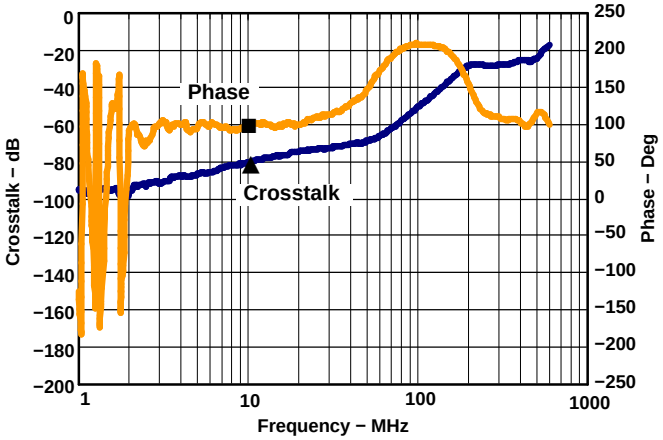

▲ Crosstalk at 10 MHz, −80 dB

■ Phase at 10 MHz, 100.62 Degrees

Figure 4. Crosstalk vs Frequency

PARAMETER MEASUREMENT INFORMATION

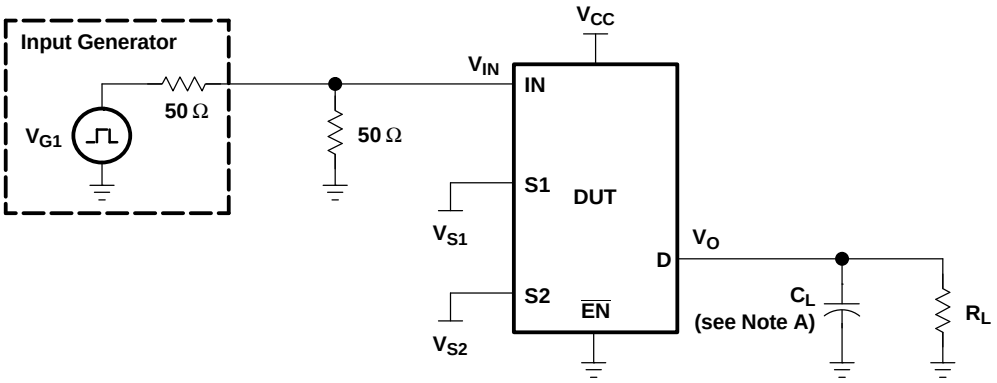

TEST	V_{CC}	R_L	C_L	V_{S1}	V_{S2}
t_{ON}	3.3 V ± 0.3 V 3.3 V ± 0.3 V	75 75	20 20	GND V_{CC}	V_{CC} GND
t_{OFF}	3.3 V ± 0.3 V 3.3 V ± 0.3 V	75 75	20 20	GND V_{CC}	V_{CC} GND

TEST CIRCUIT

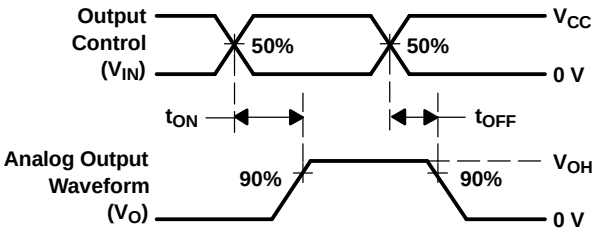

VOLTAGE WAVEFORMS
t_{ON} AND t_{OFF} TIMES

NOTES: A. C_L includes probe and jig capacitance.
B. All input pulses are supplied by generators having the following characteristics: PRR ≤ 10 MHz, Z_O = 50 Ω, t_r ≤ 2.5 ns, t_f ≤ 2.5 ns.
C. The outputs are measured one at a time, with one transition per measurement.

Figure 5. Test Circuit and Voltage Waveforms

PARAMETER MEASUREMENT INFORMATION

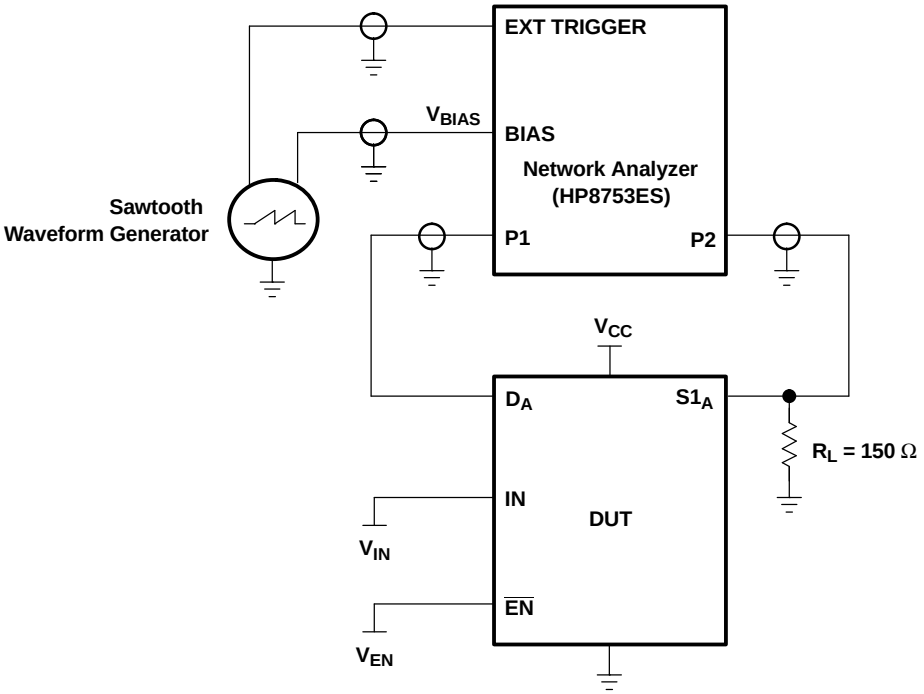

NOTE: For additional information on measurement method, refer to the TI application report, *Measuring Differential Gain and Phase*, literature number SLOA040.

Figure 6. Test Circuit for Differential Gain/Phase Measurement

Differential gain and phase are measured at the output of the ON channel. For example, when V_{IN} = 0, V_{EN} = 0, and D_A is the input, the output is measured at $S1_A$.

HP8753ES Setup

Average = 20
RBW = 300 Hz
ST = 1.381 s
P1 = -7 dBM
CW frequency = 3.58 MHz

Sawtooth Waveform Generator Setup

V_{BIAS} = 0 to 1 V
Frequency = 0.905 Hz

PARAMETER MEASUREMENT INFORMATION

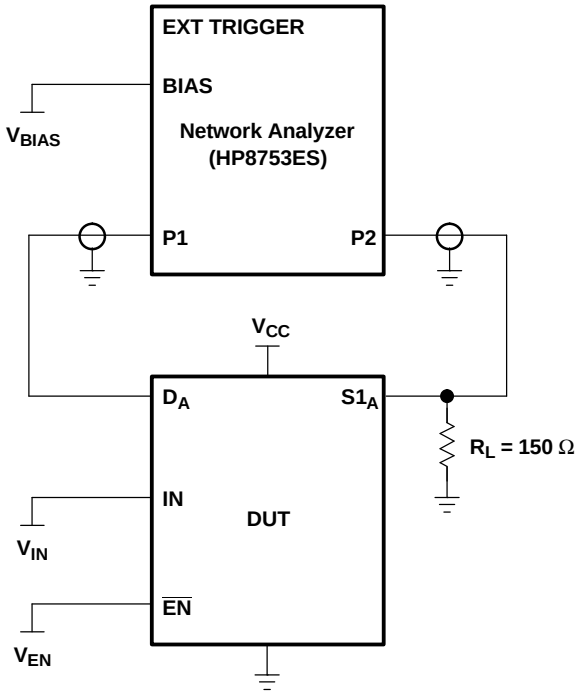

Figure 7. Test Circuit for Frequency Response (BW)

Frequency response is measured at the output of the ON channel. For example, when V_{IN} = 0, V_{EN} = 0, and D_A is the input, the output is measured at $S1_A$. All unused analog I/O ports are left open.

HP8753ES Setup

Average = 4
RBW = 3 kHz
V_{BIAS} = 0.35 V
ST = 2 s
P1 = 0 dBM

PARAMETER MEASUREMENT INFORMATION

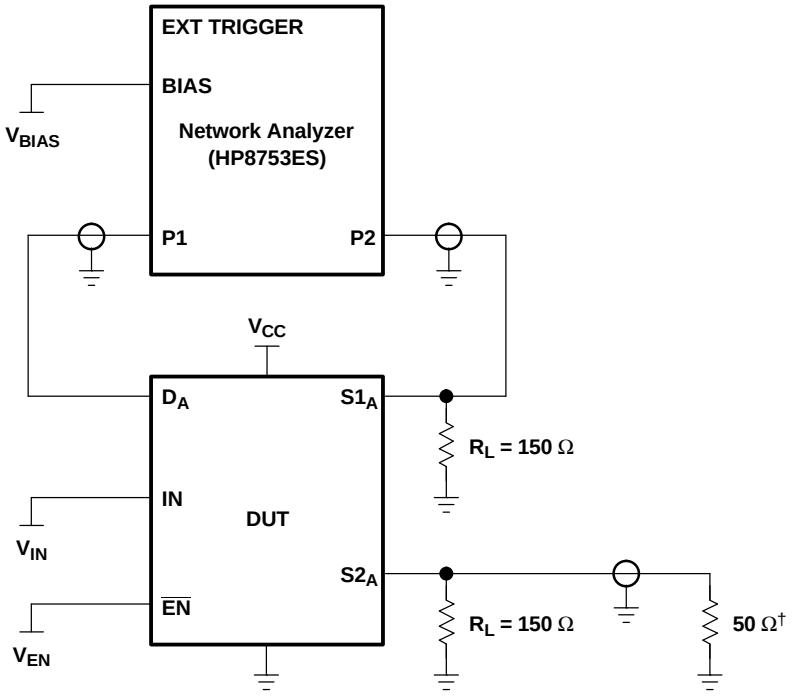

† A 50-Ω termination resistor is needed for the Network Analyzer.

Figure 8. Test Circuit for Crosstalk (X_{TALK})

Crosstalk is measured at the output of the nonadjacent ON channel. For example, when V_{IN} = 0, V_{EN} = 0, and D_A is the input, the output is measured at $S1_B$. All unused analog input (D) ports and output (S) ports are connected to GND through 10-Ω and 50-Ω pulldown resistors, respectively.

HP8753ES Setup

Average = 4
RBW = 3 kHz
V_{BIAS} = 0.35 V
ST = 2 s
P1 = 0 dBM

PARAMETER MEASUREMENT INFORMATION

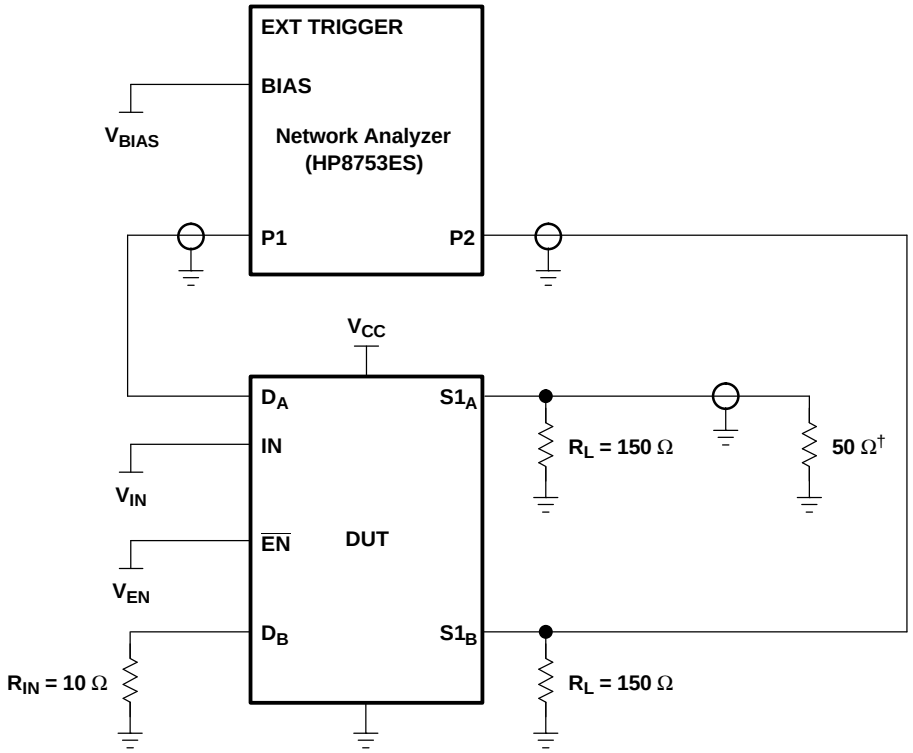

† A 50-Ω termination resistor is needed for the network analyzer.

Figure 9. Test Circuit for Off Isolation (O_{IRR})

Off isolation is measured at the output of the OFF channel. For example, when $V_{IN} = V_{CC}$, $V_{EN} = 0$, and D_A is the input, the output is measured at $S1_A$. All unused analog input (D) ports are left open, and output (S) ports are connected to GND through 50-Ω pulldown resistors.

HP8753ES Setup

Average = 4
RBW = 3 kHz
V_{BIAS} = 0.35 V
ST = 2 s
P1 = 0 dBM

PACKAGING INFORMATION

Orderable Device	Status (1)	Package Type	Package Drawing	Pins	Package Qty	Eco Plan (2)	Lead/Ball Finish (6)	MSL Peak Temp (3)	Op Temp (°C)	Device Marking (4/5)	Samples
TS3V330D	ACTIVE	SOIC	D	16	40	Green (RoHS & no Sb/Br)	CU NIPDAU	Level-1-260C-UNLIM	-40 to 85	TS3V330	Samples
TS3V330DBQR	ACTIVE	SSOP	DBQ	16	2500	Green (RoHS & no Sb/Br)	CU NIPDAU	Level-2-260C-1 YEAR	-40 to 85	TF330	Samples
TS3V330DGVR	ACTIVE	TVSOP	DGV	16	2000	Green (RoHS & no Sb/Br)	CU NIPDAU	Level-1-260C-UNLIM	-40 to 85	TF330	Samples
TS3V330DR	ACTIVE	SOIC	D	16	2500	Green (RoHS & no Sb/Br)	CU NIPDAU	Level-1-260C-UNLIM	-40 to 85	TS3V330	Samples
TS3V330PW	ACTIVE	TSSOP	PW	16	90	Green (RoHS & no Sb/Br)	CU NIPDAU	Level-1-260C-UNLIM	-40 to 85	TF330	Samples
TS3V330PWR	ACTIVE	TSSOP	PW	16	2000	Green (RoHS & no Sb/Br)	CU NIPDAU	Level-1-260C-UNLIM	-40 to 85	TF330	Samples
TS3V330RGYR	ACTIVE	VQFN	RGY	16	3000	Green (RoHS & no Sb/Br)	CU NIPDAU	Level-2-260C-1 YEAR	-40 to 85	TF330	Samples

(1) The marketing status values are defined as follows:
ACTIVE: Product device recommended for new designs.
LIFEBUY: TI has announced that the device will be discontinued, and a lifetime-buy period is in effect.
NRND: Not recommended for new designs. Device is in production to support existing customers, but TI does not recommend using this part in a new design.
PREVIEW: Device has been announced but is not in production. Samples may or may not be available.
OBSOLETE: TI has discontinued the production of the device.

(2) **RoHS:** TI defines "RoHS" to mean semiconductor products that are compliant with the current EU RoHS requirements for all 10 RoHS substances, including the requirement that RoHS substance do not exceed 0.1% by weight in homogeneous materials. Where designed to be soldered at high temperatures, "RoHS" products are suitable for use in specified lead-free processes. TI may reference these types of products as "Pb-Free".
RoHS Exempt: TI defines "RoHS Exempt" to mean products that contain lead but are compliant with EU RoHS pursuant to a specific EU RoHS exemption.
Green: TI defines "Green" to mean the content of Chlorine (Cl) and Bromine (Br) based flame retardants meet JS709B low halogen requirements of <=1000ppm threshold. Antimony trioxide based flame retardants must also meet the <=1000ppm threshold requirement.

(3) MSL, Peak Temp. - The Moisture Sensitivity Level rating according to the JEDEC industry standard classifications, and peak solder temperature.

(4) There may be additional marking, which relates to the logo, the lot trace code information, or the environmental category on the device.

(5) Multiple Device Markings will be inside parentheses. Only one Device Marking contained in parentheses and separated by a "~" will appear on a device. If a line is indented then it is a continuation of the previous line and the two combined represent the entire Device Marking for that device.

(6) Lead/Ball Finish - Orderable Devices may have multiple material finish options. Finish options are separated by a vertical ruled line. Lead/Ball Finish values may wrap to two lines if the finish value exceeds the maximum column width.

Important Information and Disclaimer: The information provided on this page represents TI's knowledge and belief as of the date that it is provided. TI bases its knowledge and belief on information provided by third parties, and makes no representation or warranty as to the accuracy of such information. Efforts are underway to better integrate information from third parties. TI has taken and continues to take reasonable steps to provide representative and accurate information but may not have conducted destructive testing or chemical analysis on incoming materials and chemicals. TI and TI suppliers consider certain information to be proprietary, and thus CAS numbers and other limited information may not be available for release.

In no event shall TI's liability arising out of such information exceed the total purchase price of the TI part(s) at issue in this document sold by TI to Customer on an annual basis.

TAPE AND REEL INFORMATION

REEL DIMENSIONS

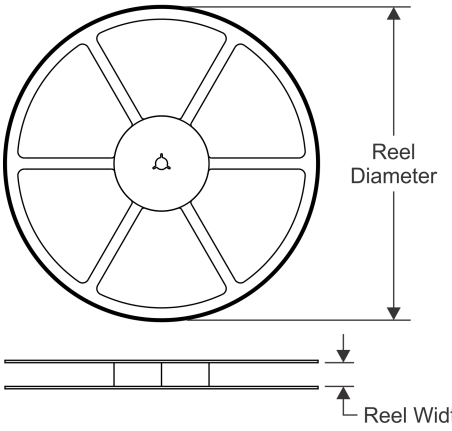

TAPE DIMENSIONS

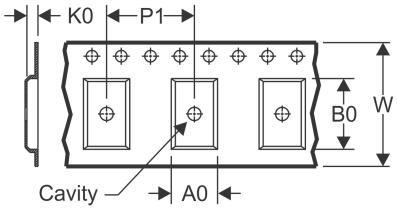

A0	Dimension designed to accommodate the component width
B0	Dimension designed to accommodate the component length
K0	Dimension designed to accommodate the component thickness
W	Overall width of the carrier tape
P1	Pitch between successive cavity centers

QUADRANT ASSIGNMENTS FOR PIN 1 ORIENTATION IN TAPE

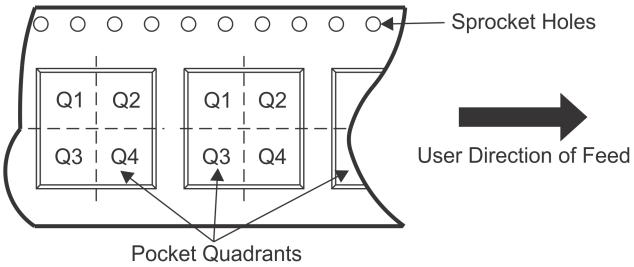

*All dimensions are nominal

Device	Package Type	Package Drawing	Pins	SPQ	Reel Diameter (mm)	Reel Width W1 (mm)	A0 (mm)	B0 (mm)	K0 (mm)	P1 (mm)	W (mm)	Pin1 Quadrant
TS3V330DBQR	SSOP	DBQ	16	2500	330.0	12.5	6.4	5.2	2.1	8.0	12.0	Q1
TS3V330DGVR	TVSOP	DGV	16	2000	330.0	12.4	6.8	4.0	1.6	8.0	12.0	Q1
TS3V330DR	SOIC	D	16	2500	330.0	16.4	6.5	10.3	2.1	8.0	16.0	Q1
TS3V330PWR	TSSOP	PW	16	2000	330.0	12.4	6.9	5.6	1.6	8.0	12.0	Q1
TS3V330RGYR	VQFN	RGY	16	3000	330.0	12.4	3.8	4.3	1.5	8.0	12.0	Q1

TAPE AND REEL BOX DIMENSIONS

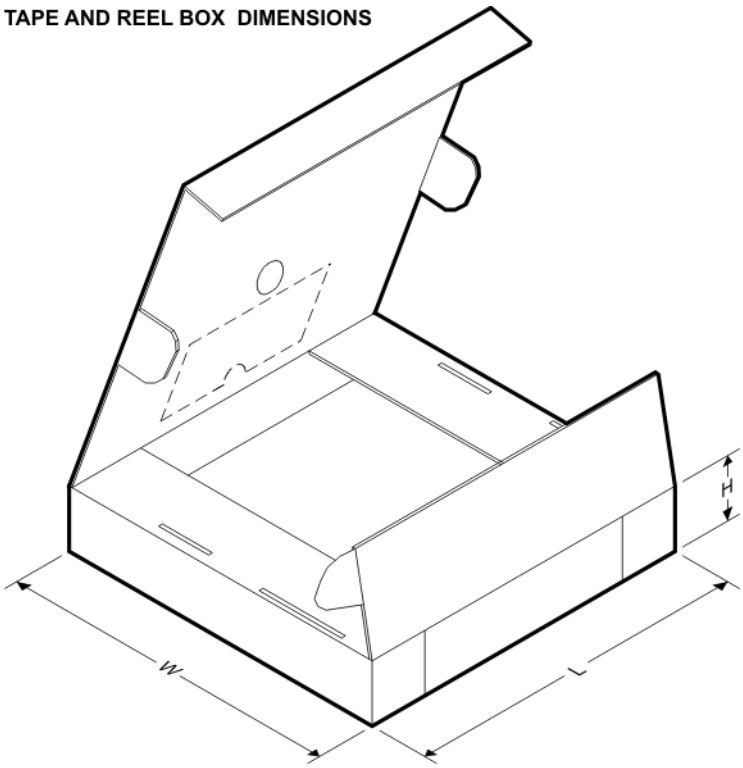

*All dimensions are nominal

Device	Package Type	Package Drawing	Pins	SPQ	Length (mm)	Width (mm)	Height (mm)
TS3V330DBQR	SSOP	DBQ	16	2500	340.5	338.1	20.6
TS3V330DGVR	TVSOP	DGV	16	2000	367.0	367.0	35.0
TS3V330DR	SOIC	D	16	2500	333.2	345.9	28.6
TS3V330PWR	TSSOP	PW	16	2000	367.0	367.0	35.0
TS3V330RGYR	VQFN	RGY	16	3000	367.0	367.0	35.0

D (R–PDSO–G16) PLASTIC SMALL OUTLINE

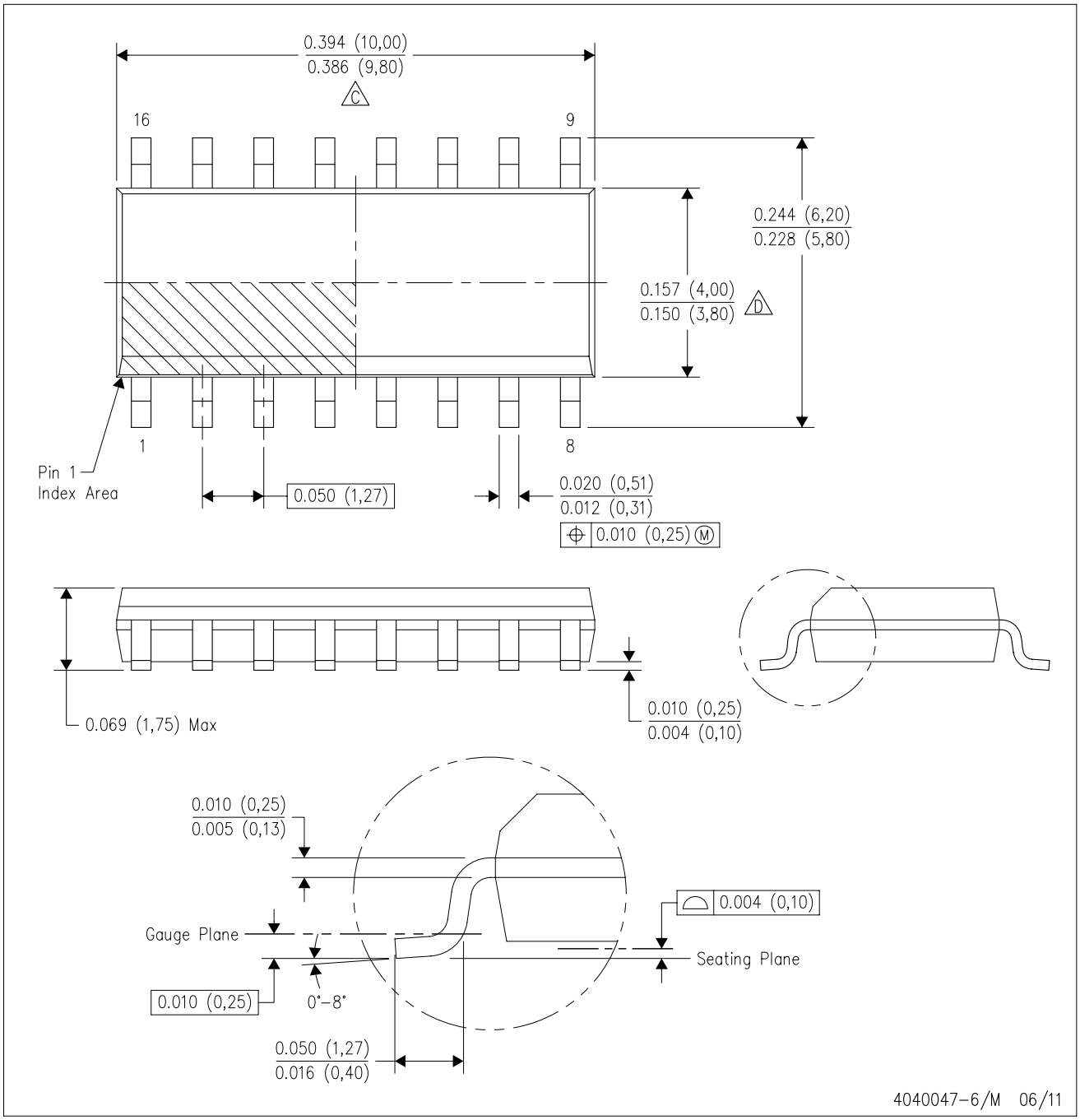

NOTES:
A. All linear dimensions are in inches (millimeters).
B. This drawing is subject to change without notice.
C. Body length does not include mold flash, protrusions, or gate burrs. Mold flash, protrusions, or gate burrs shall not exceed 0.006 (0,15) each side.
D. Body width does not include interlead flash. Interlead flash shall not exceed 0.017 (0,43) each side.
E. Reference JEDEC MS–012 variation AC.

D (R–PDSO–G16) PLASTIC SMALL OUTLINE

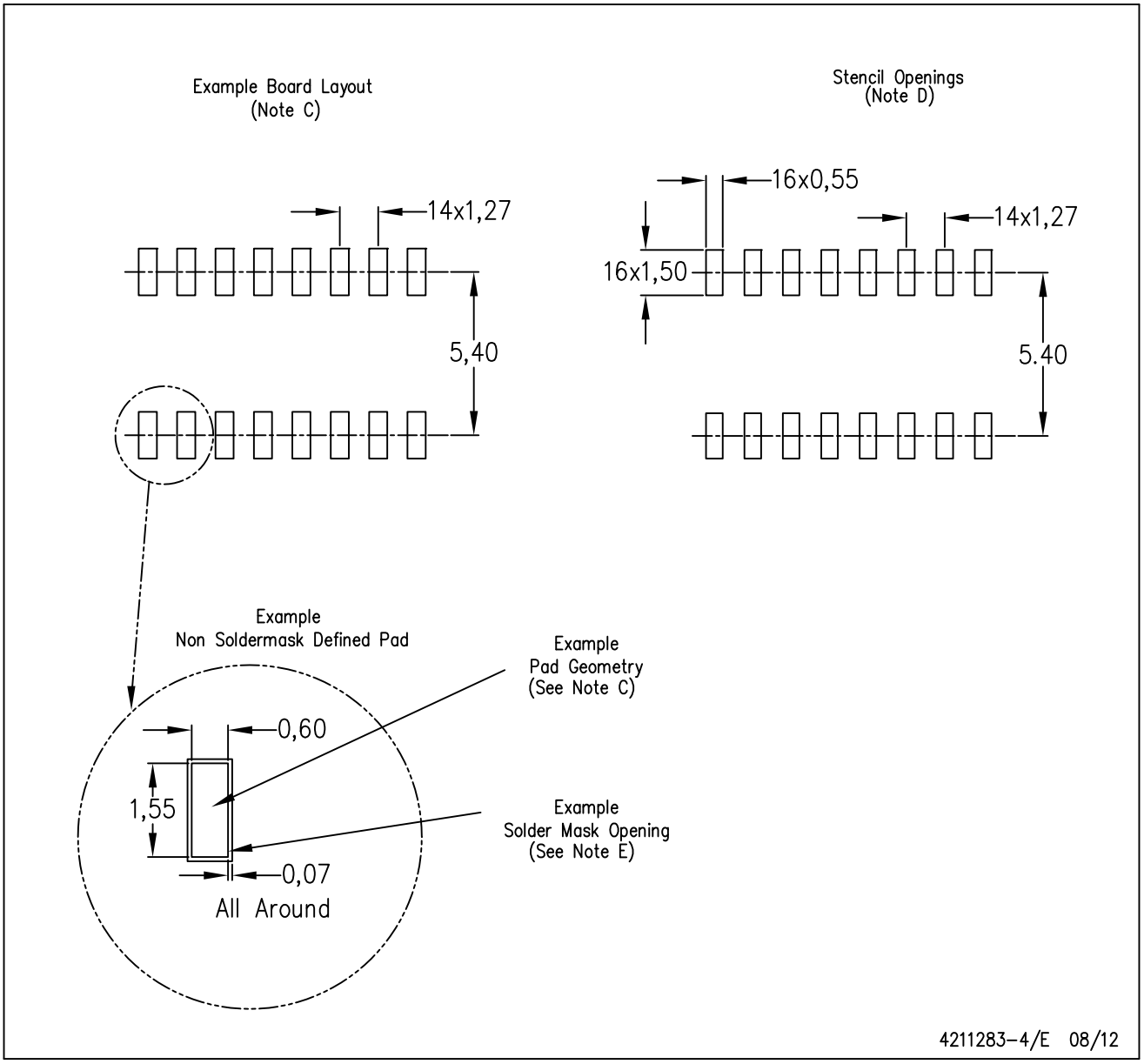

NOTES:
A. All linear dimensions are in millimeters.
B. This drawing is subject to change without notice.
C. Publication IPC–7351 is recommended for alternate designs.
D. Laser cutting apertures with trapezoidal walls and also rounding corners will offer better paste release. Customers should contact their board assembly site for stencil design recommendations. Refer to IPC–7525 for other stencil recommendations.
E. Customers should contact their board fabrication site for solder mask tolerances between and around signal pads.

PW0016A

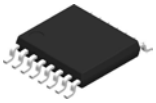

PACKAGE OUTLINE

TSSOP - 1.2 mm max height

SMALL OUTLINE PACKAGE

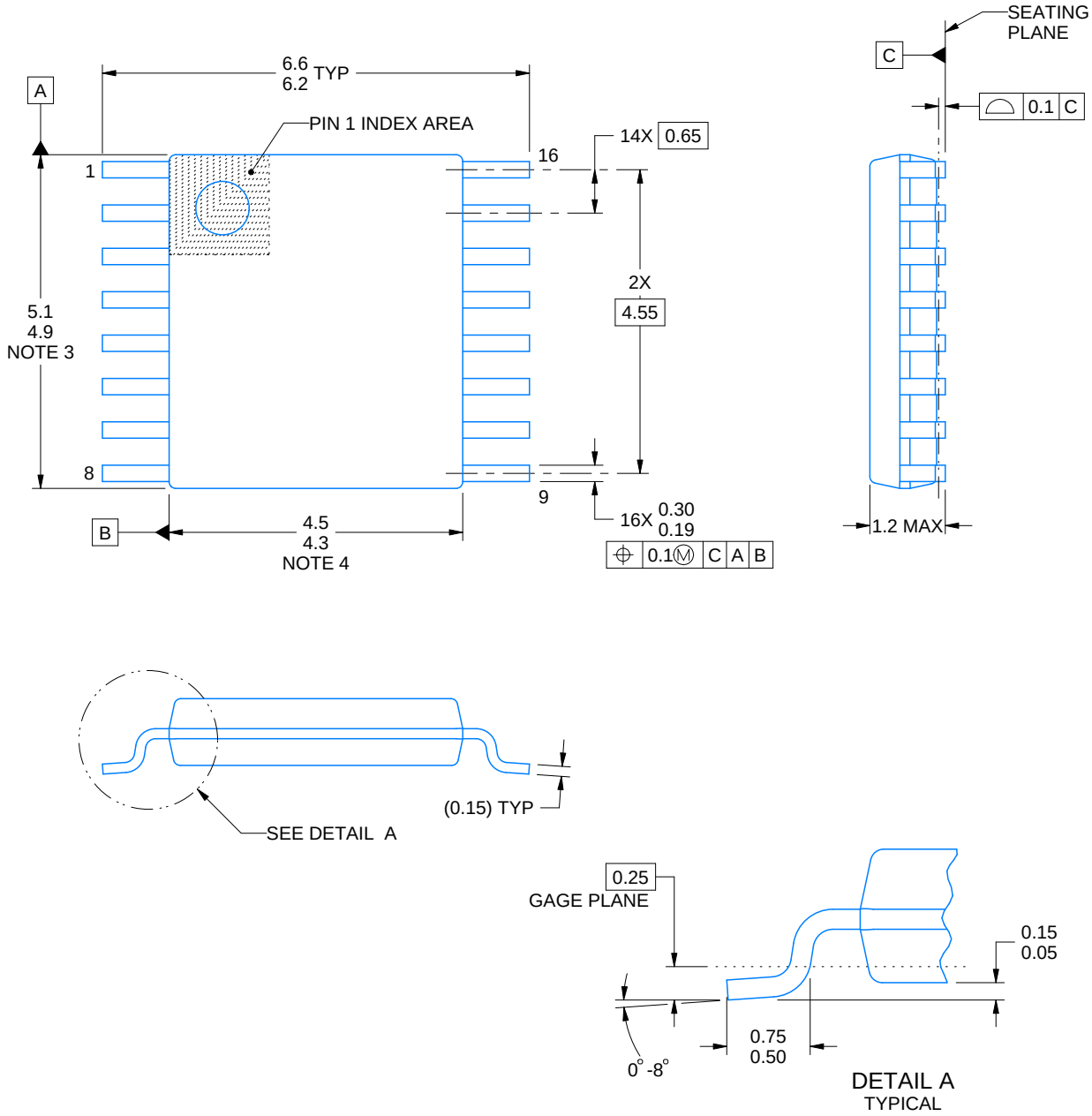

NOTES:

1. All linear dimensions are in millimeters. Any dimensions in parenthesis are for reference only. Dimensioning and tolerancing per ASME Y14.5M.
2. This drawing is subject to change without notice.
3. This dimension does not include mold flash, protrusions, or gate burrs. Mold flash, protrusions, or gate burrs shall not exceed 0.15 mm per side.
4. This dimension does not include interlead flash. Interlead flash shall not exceed 0.25 mm per side.
5. Reference JEDEC registration MO-153.

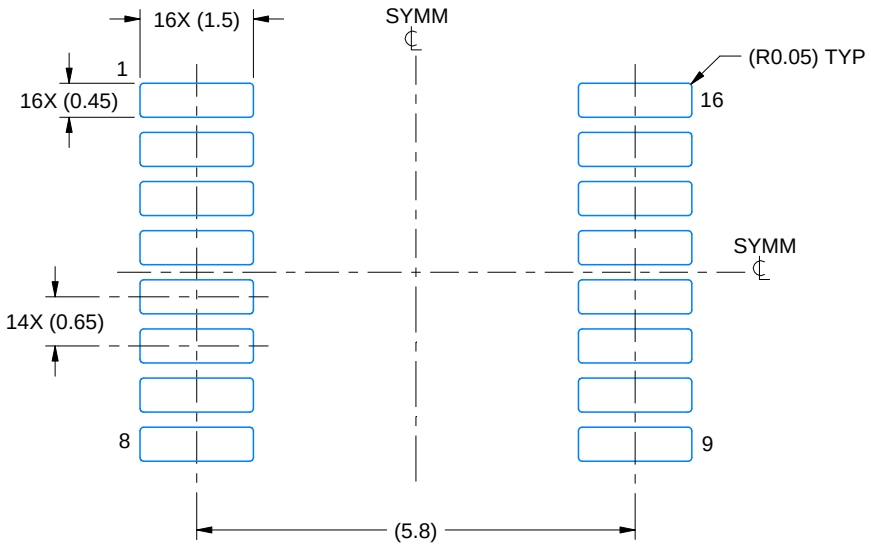

LAND PATTERN EXAMPLE
EXPOSED METAL SHOWN
SCALE: 10X

NON-SOLDER MASK DEFINED (PREFERRED)

SOLDER MASK DEFINED

SOLDER MASK DETAILS

4220204/A 02/2017

NOTES: (continued)

6. Publication IPC-7351 may have alternate designs.
7. Solder mask tolerances between and around signal pads can vary based on board fabrication site.

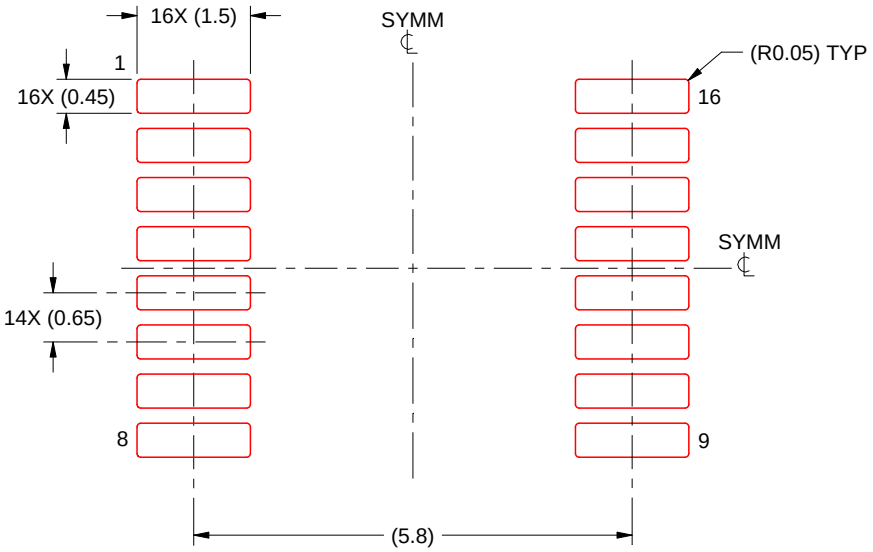

SOLDER PASTE EXAMPLE
BASED ON 0.125 mm THICK STENCIL
SCALE: 10X

4220204/A 02/2017

NOTES: (continued)

8. Laser cutting apertures with trapezoidal walls and rounded corners may offer better paste release. IPC-7525 may have alternate design recommendations.
9. Board assembly site may have different recommendations for stencil design.

DGV (R-PDSO-G)** **PLASTIC SMALL-OUTLINE**

24 PINS SHOWN

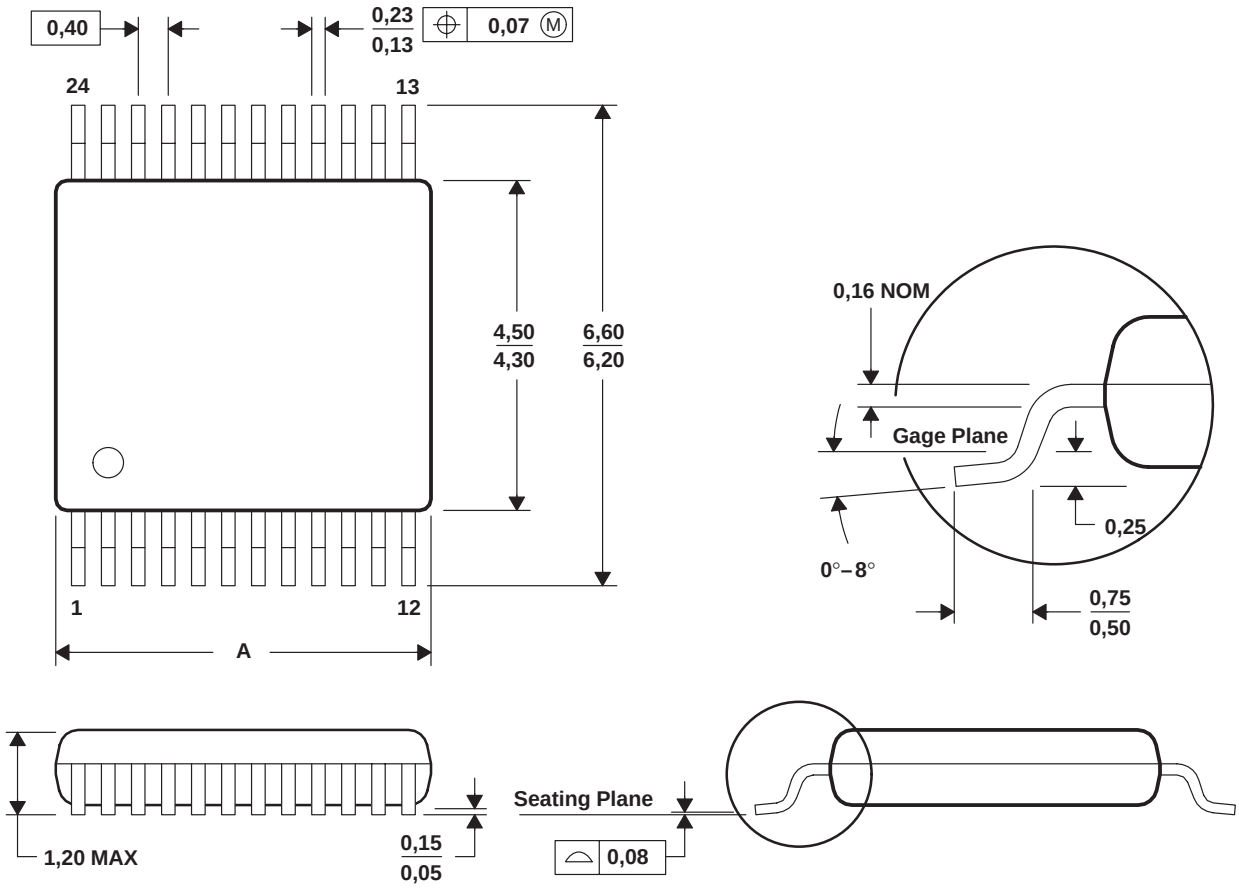

DIM \ PINS **	14	16	20	24	38	48	56
A MAX	3,70	3,70	5,10	5,10	7,90	9,80	11,40
A MIN	3,50	3,50	4,90	4,90	7,70	9,60	11,20

4073251/E 08/00

NOTES: A. All linear dimensions are in millimeters.
B. This drawing is subject to change without notice.
C. Body dimensions do not include mold flash or protrusion, not to exceed 0,15 per side.
D. Falls within JEDEC: 24/48 Pins – MO-153
14/16/20/56 Pins – MO-194

DBQ 16 SSOP - 1.75 mm max height

SHRINK SMALL-OUTLINE PACKAGE

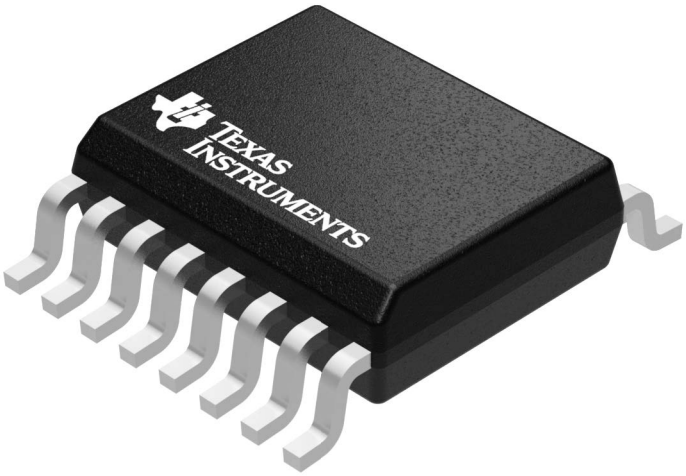

Images above are just a representation of the package family, actual package may vary.
Refer to the product data sheet for package details.

4073301-2/I

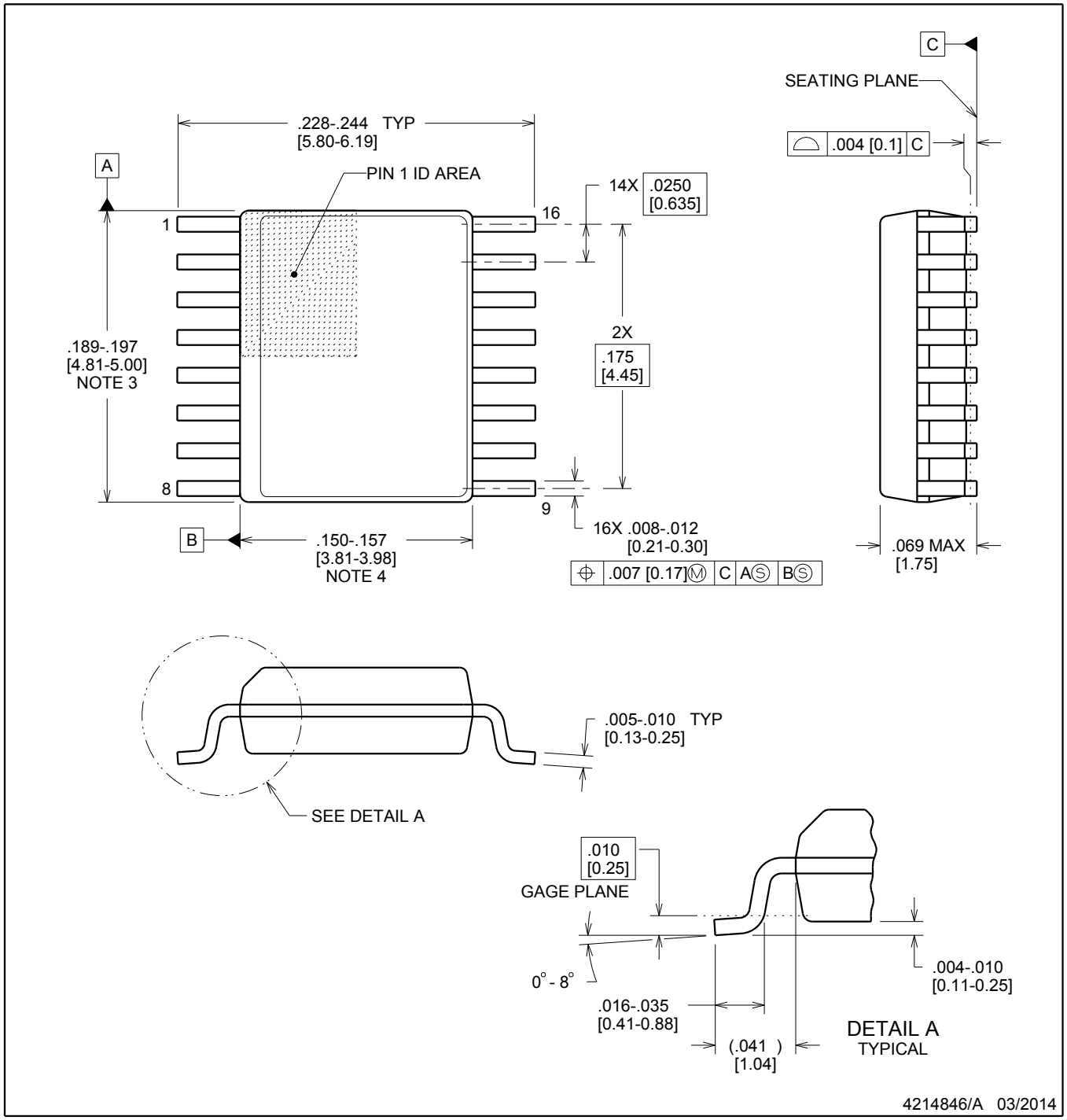

NOTES:

1. Linear dimensions are in inches [millimeters]. Dimensions in parenthesis are for reference only. Controlling dimensions are in inches. Dimensioning and tolerancing per ASME Y14.5M.
2. This drawing is subject to change without notice.
3. This dimension does not include mold flash, protrusions, or gate burrs. Mold flash, protrusions, or gate burrs shall not exceed .006 inch, per side.
4. This dimension does not include interlead flash.
5. Reference JEDEC registration MO-137, variation AB.

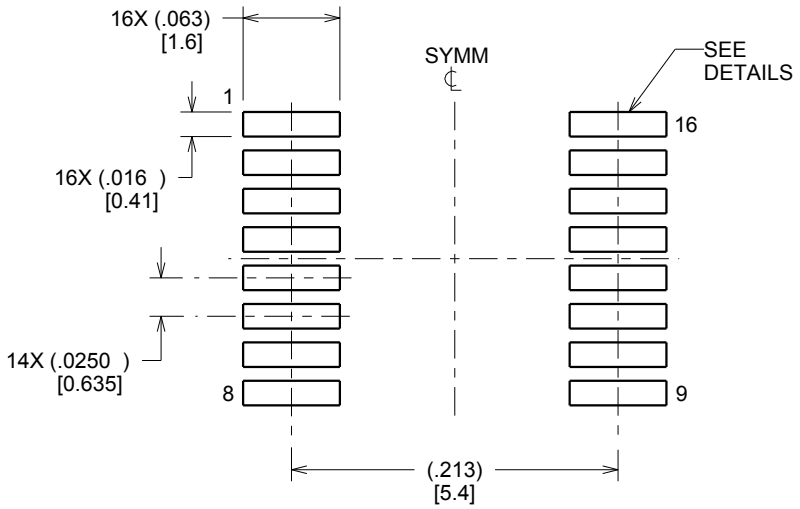

LAND PATTERN EXAMPLE
SCALE:8X

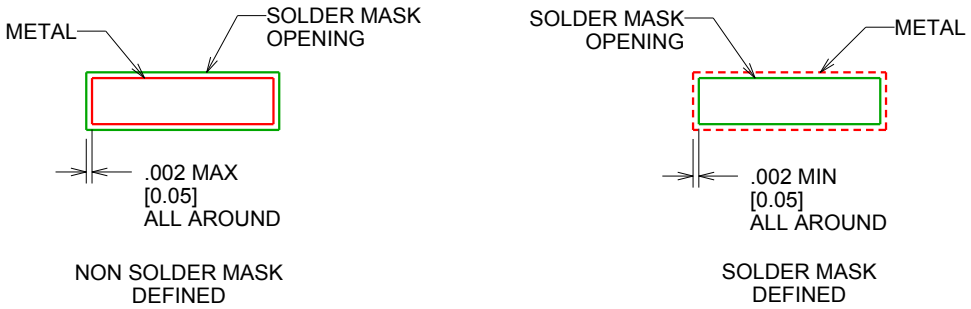

SOLDER MASK DETAILS

4214846/A 03/2014

NOTES: (continued)

6. Publication IPC-7351 may have alternate designs.
7. Solder mask tolerances between and around signal pads can vary based on board fabrication site.

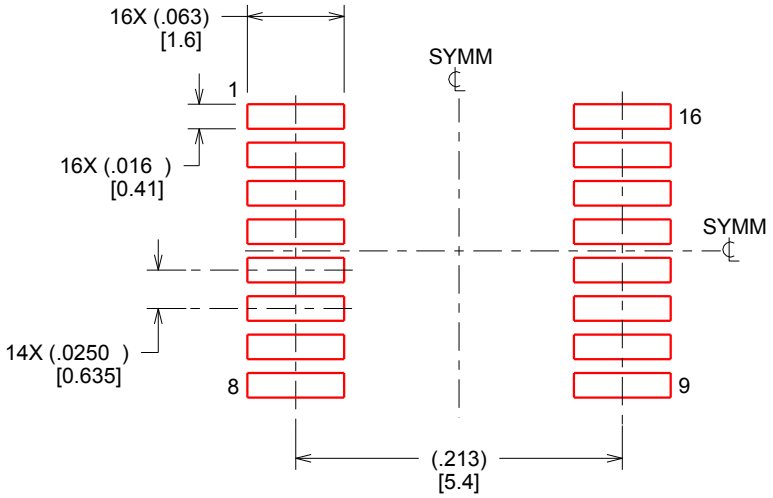

SOLDER PASTE EXAMPLE
BASED ON .005 INCH [0.127 MM] THICK STENCIL
SCALE:8X

4214846/A 03/2014

NOTES: (continued)

8. Laser cutting apertures with trapezoidal walls and rounded corners may offer better paste release. IPC-7525 may have alternate design recommendations.
9. Board assembly site may have different recommendations for stencil design.

RGY (R-PVQFN-N16) PLASTIC QUAD FLATPACK NO-LEAD

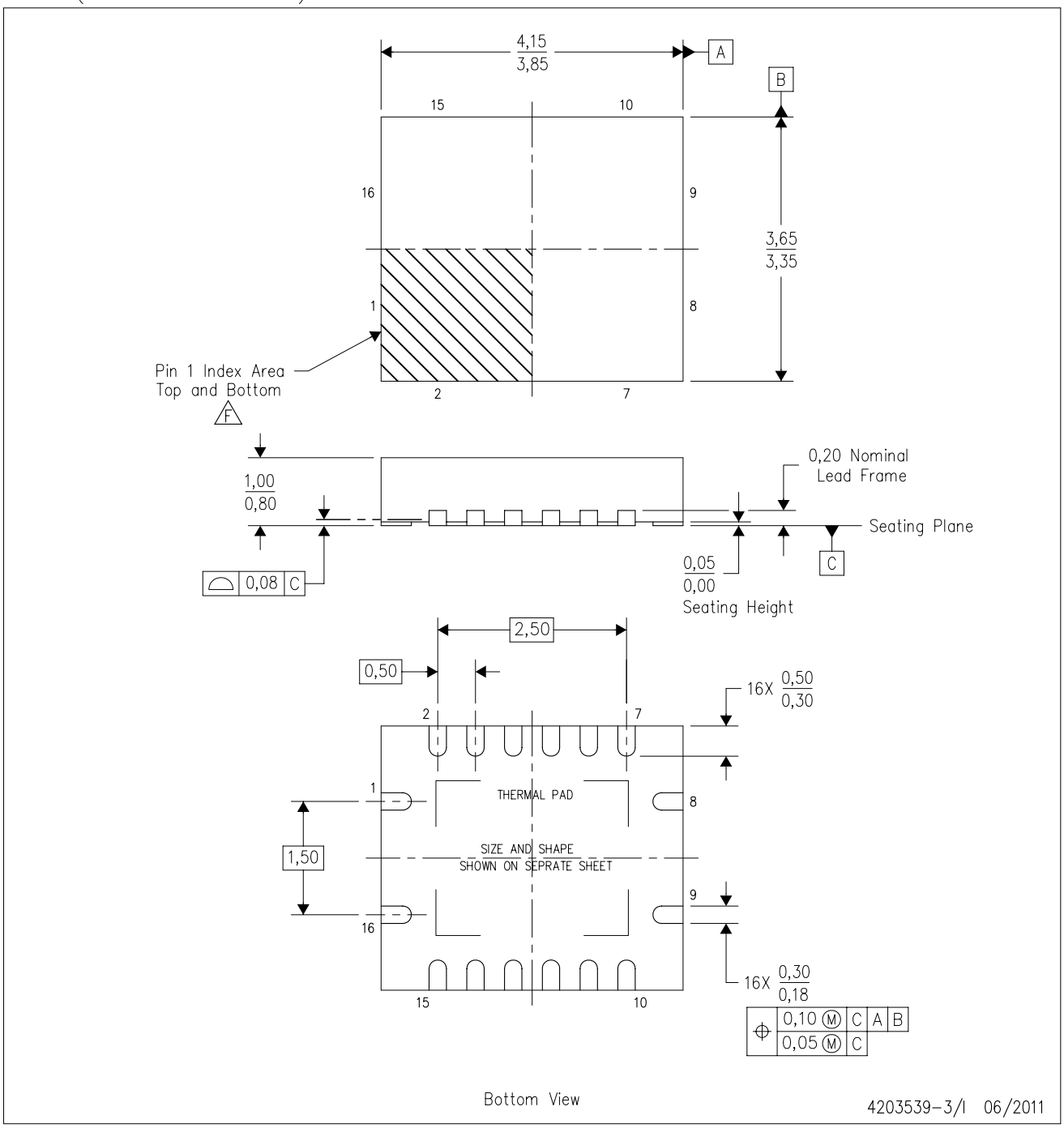

NOTES:
- A. All linear dimensions are in millimeters. Dimensioning and tolerancing per ASME Y14.5M-1994.
- B. This drawing is subject to change without notice.
- C. QFN (Quad Flatpack No-Lead) package configuration.
- D. The package thermal pad must be soldered to the board for thermal and mechanical performance.
- E. See the additional figure in the Product Data Sheet for details regarding the exposed thermal pad features and dimensions.
- F. Pin 1 identifiers are located on both top and bottom of the package and within the zone indicated. The Pin 1 identifiers are either a molded, marked, or metal feature.
- G. Package complies to JEDEC MO-241 variation BA.

RGY (R–PVQFN–N16) PLASTIC QUAD FLATPACK NO–LEAD

THERMAL INFORMATION

This package incorporates an exposed thermal pad that is designed to be attached directly to an external heatsink. The thermal pad must be soldered directly to the printed circuit board (PCB). After soldering, the PCB can be used as a heatsink. In addition, through the use of thermal vias, the thermal pad can be attached directly to the appropriate copper plane shown in the electrical schematic for the device, or alternatively, can be attached to a special heatsink structure designed into the PCB. This design optimizes the heat transfer from the integrated circuit (IC).

For information on the Quad Flatpack No–Lead (QFN) package and its advantages, refer to Application Report, QFN/SON PCB Attachment, Texas Instruments Literature No. SLUA271. This document is available at www.ti.com.

The exposed thermal pad dimensions for this package are shown in the following illustration.

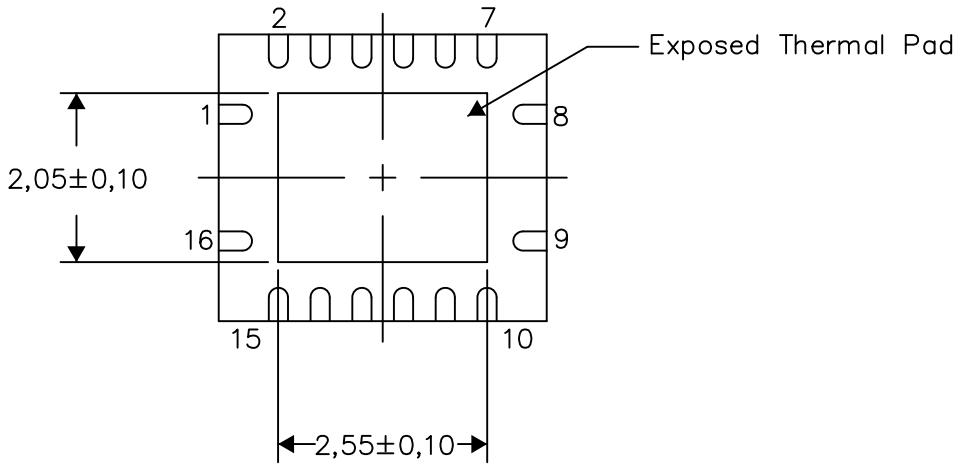

Bottom View

Exposed Thermal Pad Dimensions

4206353–3/P 03/14

NOTE: All linear dimensions are in millimeters

RGY (R–PVQFN–N16) PLASTIC QUAD FLATPACK NO–LEAD

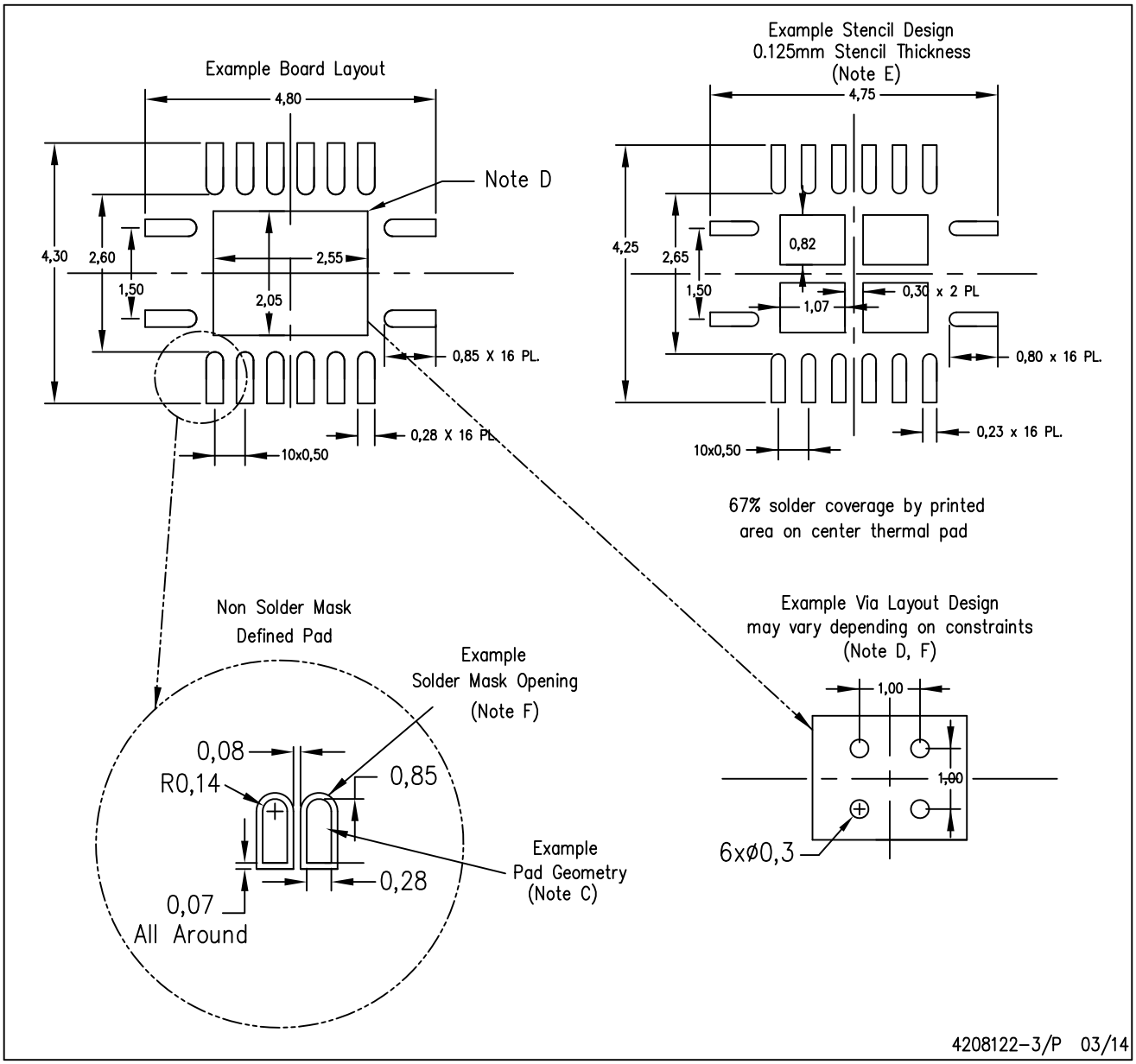

NOTES:
A. All linear dimensions are in millimeters.
B. This drawing is subject to change without notice.
C. Publication IPC–7351 is recommended for alternate designs.
D. This package is designed to be soldered to a thermal pad on the board. Refer to Application Note, Quad Flat–Pack QFN/SON PCB Attachment, Texas Instruments Literature No. SLUA271, and also the Product Data Sheets for specific thermal information, via requirements, and recommended board layout. These documents are available at www.ti.com <http://www.ti.com>.
E. Laser cutting apertures with trapezoidal walls and also rounding corners will offer better paste release. Customers should contact their board assembly site for stencil design recommendations. Refer to IPC 7525 for stencil design considerations.
F. Customers should contact their board fabrication site for minimum solder mask web tolerances between signal pads.

IMPORTANT NOTICE AND DISCLAIMER

TI PROVIDES TECHNICAL AND RELIABILITY DATA (INCLUDING DATASHEETS), DESIGN RESOURCES (INCLUDING REFERENCE DESIGNS), APPLICATION OR OTHER DESIGN ADVICE, WEB TOOLS, SAFETY INFORMATION, AND OTHER RESOURCES “AS IS” AND WITH ALL FAULTS, AND DISCLAIMS ALL WARRANTIES, EXPRESS AND IMPLIED, INCLUDING WITHOUT LIMITATION ANY IMPLIED WARRANTIES OF MERCHANTABILITY, FITNESS FOR A PARTICULAR PURPOSE OR NON-INFRINGEMENT OF THIRD PARTY INTELLECTUAL PROPERTY RIGHTS.

These resources are intended for skilled developers designing with TI products. You are solely responsible for (1) selecting the appropriate TI products for your application, (2) designing, validating and testing your application, and (3) ensuring your application meets applicable standards, and any other safety, security, or other requirements. These resources are subject to change without notice. TI grants you permission to use these resources only for development of an application that uses the TI products described in the resource. Other reproduction and display of these resources is prohibited. No license is granted to any other TI intellectual property right or to any third party intellectual property right. TI disclaims responsibility for, and you will fully indemnify TI and its representatives against, any claims, damages, costs, losses, and liabilities arising out of your use of these resources.

TI’s products are provided subject to TI’s Terms of Sale (www.ti.com/legal/termsofsale.html) or other applicable terms available either on ti.com or provided in conjunction with such TI products. TI’s provision of these resources does not expand or otherwise alter TI’s applicable warranties or warranty disclaimers for TI products.

Mailing Address: Texas Instruments, Post Office Box 655303, Dallas, Texas 75265
Copyright © 2018, Texas Instruments Incorporated