- **Excellent Price/Performance Digital Signal Processors (DSPs): TMS320C62x™ (TMS320C6211 and TMS320C6211B)**
  - **Eight 32-Bit Instructions/Cycle**
  - **C6211, C6211B, C6711, and C6711B are Pin-Compatible**
  - **150-, 167-MHz Clock Rates**
  - **6.7-, 6-ns Instruction Cycle Time**
  - **1200, 1333 MIPS**
  - **Extended Temperature Device (C6211B)**
- **VelociTI™ Advanced Very Long Instruction Word (VLIW) C62x™ DSP Core (C6211/11B)**
  - **Eight Highly Independent Functional Units:**
    - **Six ALUs (32-/40-Bit)**
    - **Two 16-Bit Multipliers (32-Bit Results)**
  - **Load-Store Architecture With 32 32-Bit General-Purpose Registers**
  - **Instruction Packing Reduces Code Size**
  - **All Instructions Conditional**
- **Instruction Set Features**
  - **Byte-Addressable (8-, 16-, 32-Bit Data)**
  - **8-Bit Overflow Protection**
  - **Saturation**
  - **Bit-Field Extract, Set, Clear**
  - **Bit-Counting**
  - **Normalization**
- **L1/L2 Memory Architecture**
  - **32K-Bit (4K-Byte) L1P Program Cache (Direct Mapped)**
  - **32K-Bit (4K-Byte) L1D Data Cache (2-Way Set-Associative)**
  - **512K-Bit (64K-Byte) L2 Unified Mapped RAM/Cache (Flexible Data/Program Allocation)**
- **Device Configuration**
  - **Boot Mode: HPI, 8-, 16-, and 32-Bit ROM Boot**
  - **Endianness: Little Endian, Big Endian**
- **32-Bit External Memory Interface (EMIF)**
  - **Glueless Interface to Asynchronous Memories: SRAM and EPROM**
  - **Glueless Interface to Synchronous Memories: SDRAM and SBSRAM**
  - **512M-Byte Total Addressable External Memory Space**
- **Enhanced Direct-Memory-Access (EDMA) Controller (16 Independent Channels)**
- **16-Bit Host-Port Interface (HPI)**
  - **Access to Entire Memory Map**
- **Two Multichannel Buffered Serial Ports (McBSPs)**
  - **Direct Interface to T1/E1, MVIP, SCSA Framers**
  - **ST-Bus-Switching Compatible**
  - **Up to 256 Channels Each**
  - **AC97-Compatible**
  - **Serial-Peripheral-Interface (SPI) Compatible (Motorola™)**
- **Two 32-Bit General-Purpose Timers**
- **Flexible Phase-Locked-Loop (PLL) Clock Generator**
- **IEEE-1149.1 (JTAG†) Boundary-Scan-Compatible**
- **256-Pin Ball Grid Array (BGA) Package (GFN and ZFN Suffixes)**
- **0.18-μm/5-Level Metal Process**
  - **CMOS Technology**
- **3.3-V I/Os, 1.8-V Internal**

Please be aware that an important notice concerning availability, standard warranty, and use in critical applications of Texas Instruments semiconductor products and disclaimers thereto appears at the end of this data sheet.

TMS320C62x, VelociTI, and C62x are trademarks of Texas Instruments.
Motorola is a trademark of Motorola, Inc.
All trademarks are the property of their respective owners.
† IEEE Standard 1149.1-1990 Standard-Test-Access Port and Boundary Scan Architecture.

PRODUCTION DATA information is current as of publication date. Products conform to specifications per the terms of Texas Instruments standard warranty. Production processing does not necessarily include testing of all parameters.

Copyright © 2004, Texas Instruments Incorporated

Table of Contents

revision history 3
GFN and ZFN BGA packages (bottom view) 4
description 5
device characteristics 6
device compatibility 7
functional block and CPU (DSP core) diagram 8
CPU (DSP core) description 9
memory map summary 11
peripheral register descriptions 12
PWRD bits in CPU CSR register description 17
EDMA channel synchronization events 18
interrupt sources and interrupt selector 19
signal groups description 20
terminal functions 22
development support 30
documentation support 33
clock PLL 34
power-down logic 36
power-supply sequencing 39
IEEE 1149.1 JTAG compatibility statement 40
EMIF device speed 40
bootmode 41
absolute maximum ratings over operating case temperature range 42
recommended operating conditions 42
electrical characteristics over recommended ranges of supply voltage and operating case temperature . 42
parameter measurement information 43
signal transition levels 43
timing parameters and board routing analysis 44
input and output clocks 46
asynchronous memory timing 49
synchronous-burst memory timing 52
synchronous DRAM timing 54
$\overline{\text{HOLD}}$/$\overline{\text{HOLDA}}$ timing 60
BUSREQ timing 61
reset timing 62
external interrupt timing 64
host-port interface timing 65
multichannel buffered serial port timing 69
timer timing 80
JTAG test-port timing 81
mechanical data 82

REVISION HISTORY

This data sheet revision history highlights the technical changes made to the SPRS073K device-specific data sheet to make it an SPRS073L revision.

Scope: Applicable updates to the C62x device family, specifically relating to the C6211 and C6211B devices, have been incorporated.

PAGE(S) NO.	ADDITIONS/CHANGES/DELETIONS
	Global: Added “ZFN” mechanical packaging information
3	Moved the Revision History to the front of the document
31	Device Support, Device and Development-Support Tool Nomenclature section: Updated the “To designate the stages in the product development cycle...” paragraph Updated the “TMX and TMP devices...” paragraph Added “The ZFN package, like the GFN package, is ...” paragraph
32	Figure 4. TMS320C6000™ DSP Device Nomenclature (Including the TMS320C6211 and TMS320C6211B Devices): Deleted the “TMS320C6211/C6211B Device Part Numbers (P/Ns) and Ordering Information” table and associated paragraph Added “ZFN” package and associated footnote Added the “For actual device part numbers (P/Ns) and ordering information, ...” footnote
82, 83	Mechanical Data section: Deleted the “GFN (S-PBGA-N256)” mechanical data package diagram; now an automated merge process Added “thermal resistance characteristics (S-PBGA package) for ZFN” table Added new “Packaging Information” title and lead-in sentence

GFN and ZFN BGA packages (bottom view)

GFN and ZFN 256-PIN BALL GRID ARRAY (BGA) PACKAGES
(BOTTOM VIEW)

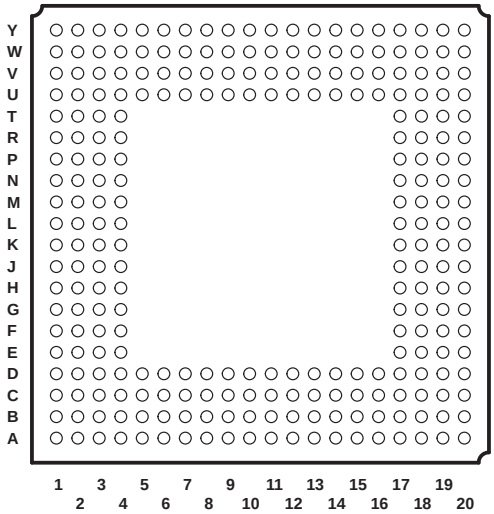

description

The TMS320C62x™ DSPs (including the TMS320C6211/C6211B devices) compose one of the fixed-point DSP families in the TMS320C6000™ DSP platform. The TMS320C6211 (C6211) and TMS320C6211B (C6211B) devices are based on the high-performance, advanced VelociTI™ very-long-instruction-word (VLIW) architecture developed by Texas Instruments (TI), making these DSPs an excellent choice for multichannel and multifunction applications.

With performance of up to 1333 million instructions per second (MIPS) at a clock rate of 167 MHz, the C6211/C6211B device offers cost-effective solutions to high-performance DSP programming challenges. The C6211/C6211B DSP possesses the operational flexibility of high-speed controllers and the numerical capability of array processors. This processor has 32 general-purpose registers of 32-bit word length and eight highly independent functional units. The eight functional units provide six arithmetic logic units (ALUs) for a high degree of parallelism and two 16-bit multipliers for a 32-bit result. The C6211/C6211B can produce two multiply-accumulates (MACs) per cycle for a total of 333 million MACs per second (MMACS). The C6211/C6211B DSP also has application-specific hardware logic, on-chip memory, and additional on-chip peripherals.

The C6211/C6211B uses a two-level cache-based architecture and has a powerful and diverse set of peripherals. The Level 1 program cache (L1P) is a 32-Kbit direct mapped cache and the Level 1 data cache (L1D) is a 32-Kbit 2-way set-associative cache. The Level 2 memory/cache (L2) consists of a 512-Kbit memory space that is shared between program and data space. L2 memory can be configured as mapped memory, cache, or combinations of the two.The peripheral set includes two multichannel buffered serial ports (McBSPs), two general-purpose timers, a host-port interface (HPI), and a glueless external memory interface (EMIF) capable of interfacing to SDRAM, SBSRAM and asynchronous peripherals.

The C6211/C6211B has a complete set of development tools which includes: a new C compiler, an assembly optimizer to simplify programming and scheduling, and a Windows™ debugger interface for visibility into source code execution.

TMS320C6000 is a trademark of Texas Instruments.
Windows is a registered trademark of the Microsoft Corporation.

device characteristics

Table 1 provides an overview of the C6211/C6211B DSP. The table shows significant features of each device, including the capacity of on-chip RAM, the peripherals, the execution time, and the package type with pin count. For more details on the C6000™ DSP device part numbers and part numbering, see Figure 4.

Table 1. Characteristics of the C6211/C6211B Processors

HARDWARE FEATURES		C6211 (FIXED-POINT DSP)	C6211B (FIXED-POINT DSP)
Peripherals	EMIF (Clock source = ECLKIN)	1	1
	EDMA (Internal clock source = CPU clock frequency)	1	1
	HPI	1	1
	McBSPs (Internal clock source = CPU/2 clock frequency)	2	2
	32-Bit Timers (Internal clock source = CPU/4 clock frequency)	2	2
On-Chip Memory	Size (Bytes)	72K	72K
	Organization	4K-Byte (4KB) L1 Program (L1P) Cache 4KB L1 Data (L1D) Cache 64KB Unified Mapped RAM/Cache (L2)	4K-Byte (4KB) L1 Program (L1P) Cache 4KB L1 Data (L1D) Cache 64KB Unified Mapped RAM/Cache (L2)
CPU ID+ CPU Rev ID	Control Status Register (CSR.[31:16])	0x0002	0x0002
Frequency	MHz	167, 150	167, 150
Cycle Time	ns	6 ns (C6211-167) 6.7 ns (C6211-150)	6 ns (C6211B-167) 6.7 ns (C6211B-150) 6.7 ns (C6211BGFNA-150)
Voltage	Core (V)	1.8	1.8
	I/O (V)	3.3	3.3
PLL Options	CLKIN frequency multiplier	Bypass (x1), x4	Bypass (x1), x4
BGA Packages	27 x 27 mm	256-Pin BGA (GFN)	256-Pin BGA (GFN and ZFN)
Process Technology	µm	0.18 µm	0.18 µm
Product Status Product Preview (PP) Advance Information (AI) Production Data (PD)		PD	PD

C6000 is a trademark of Texas Instruments.

device compatibility

The TMS320C6211/C6211B and C6711/C6711B devices are pin-compatible and have the same peripheral set; thus, making new system designs easier and providing faster time to market. The following list summarizes the device characteristic differences among the C6211, C6211B, C6711, and C6711B devices:

- The C6211 and C6211B devices have a fixed-point C62x CPU, while the C6711 and C6711B devices have a floating-point C67x CPU.
- The C6211/C6211B device runs at -167 and -150 MHz clock speeds (with a C6211BGFNA extended temperature device that also runs at -150 MHz), while the C6711/C6711B device runs at -150 and -100 MHz (with a C6711BGFNA extended temperature device that also runs at -100 MHz).

For a more detailed discussion on the similarities/differences between the C6211 and C6711 devices, see the *How to Begin Development Today with the TMS320C6211 DSP* and *How to Begin Development with the TMS320C6711 DSP* application reports (literature number SPRA474 and SPRA522, respectively).

functional block and CPU (DSP core) diagram

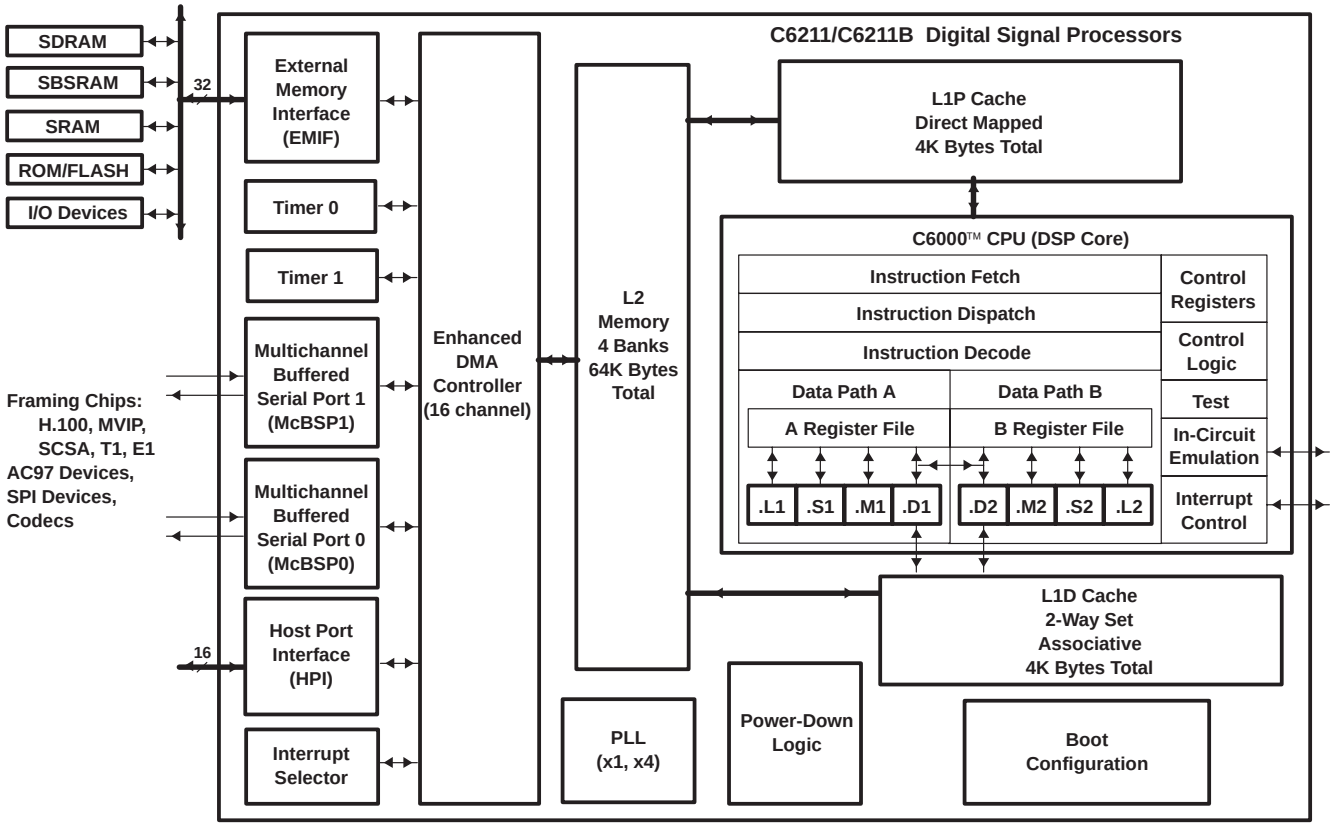

CPU (DSP core) description

The CPU fetches VelociTI™ advanced very-long instruction words (VLIW) (256 bits wide) to supply up to eight 32-bit instructions to the eight functional units during every clock cycle. The VelociTI™ VLIW architecture features controls by which all eight units do not have to be supplied with instructions if they are not ready to execute. The first bit of every 32-bit instruction determines if the next instruction belongs to the same execute packet as the previous instruction, or whether it should be executed in the following clock as a part of the next execute packet. Fetch packets are always 256 bits wide; however, the execute packets can vary in size. The variable-length execute packets are a key memory-saving feature, distinguishing the C62x CPU from other VLIW architectures.

The CPU features two sets of functional units. Each set contains four units and a register file. One set contains functional units .L1, .S1, .M1, and .D1; the other set contains units .D2, .M2, .S2, and .L2. The two register files each contain 16 32-bit registers for a total of 32 general-purpose registers. The two sets of functional units, along with two register files, compose sides A and B of the CPU (see the functional block and CPU diagram and Figure 1). The four functional units on each side of the CPU can freely share the 16 registers belonging to that side. Additionally, each side features a single data bus connected to all the registers on the other side, by which the two sets of functional units can access data from the register files on the opposite side. While register access by functional units on the same side of the CPU as the register file can service all the units in a single clock cycle, register access using the register file across the CPU supports one read and one write per cycle.

Another key feature of the C62x CPU is the load/store architecture, where all instructions operate on registers (as opposed to data in memory). Two sets of data-addressing units (.D1 and .D2) are responsible for all data transfers between the register files and the memory. The data address driven by the .D units allows data addresses generated from one register file to be used to load or store data to or from the other register file. The C62x CPU supports a variety of indirect addressing modes using either linear- or circular-addressing modes with 5- or 15-bit offsets. All instructions are conditional, and most can access any one of the 32 registers. Some registers, however, are singled out to support specific addressing or to hold the condition for conditional instructions (if the condition is not automatically “true”). The two .M functional units are dedicated for multiplies. The two .S and .L functional units perform a general set of arithmetic, logical, and branch functions with results available every clock cycle.

The processing flow begins when a 256-bit-wide instruction fetch packet is fetched from a program memory. The 32-bit instructions destined for the individual functional units are “linked” together by “1” bits in the least significant bit (LSB) position of the instructions. The instructions that are “chained” together for simultaneous execution (up to eight in total) compose an execute packet. A “0” in the LSB of an instruction breaks the chain, effectively placing the instructions that follow it in the next execute packet. If an execute packet crosses the fetch-packet boundary (256 bits wide), the assembler places it in the next fetch packet, while the remainder of the current fetch packet is padded with NOP instructions. The number of execute packets within a fetch packet can vary from one to eight. Execute packets are dispatched to their respective functional units at the rate of one per clock cycle and the next 256-bit fetch packet is not fetched until all the execute packets from the current fetch packet have been dispatched. After decoding, the instructions simultaneously drive all active functional units for a maximum execution rate of eight instructions every clock cycle. While most results are stored in 32-bit registers, they can be subsequently moved to memory as bytes or half-words as well. All load and store instructions are byte-, half-word, or word-addressable.

CPU (DSP core) description (continued)

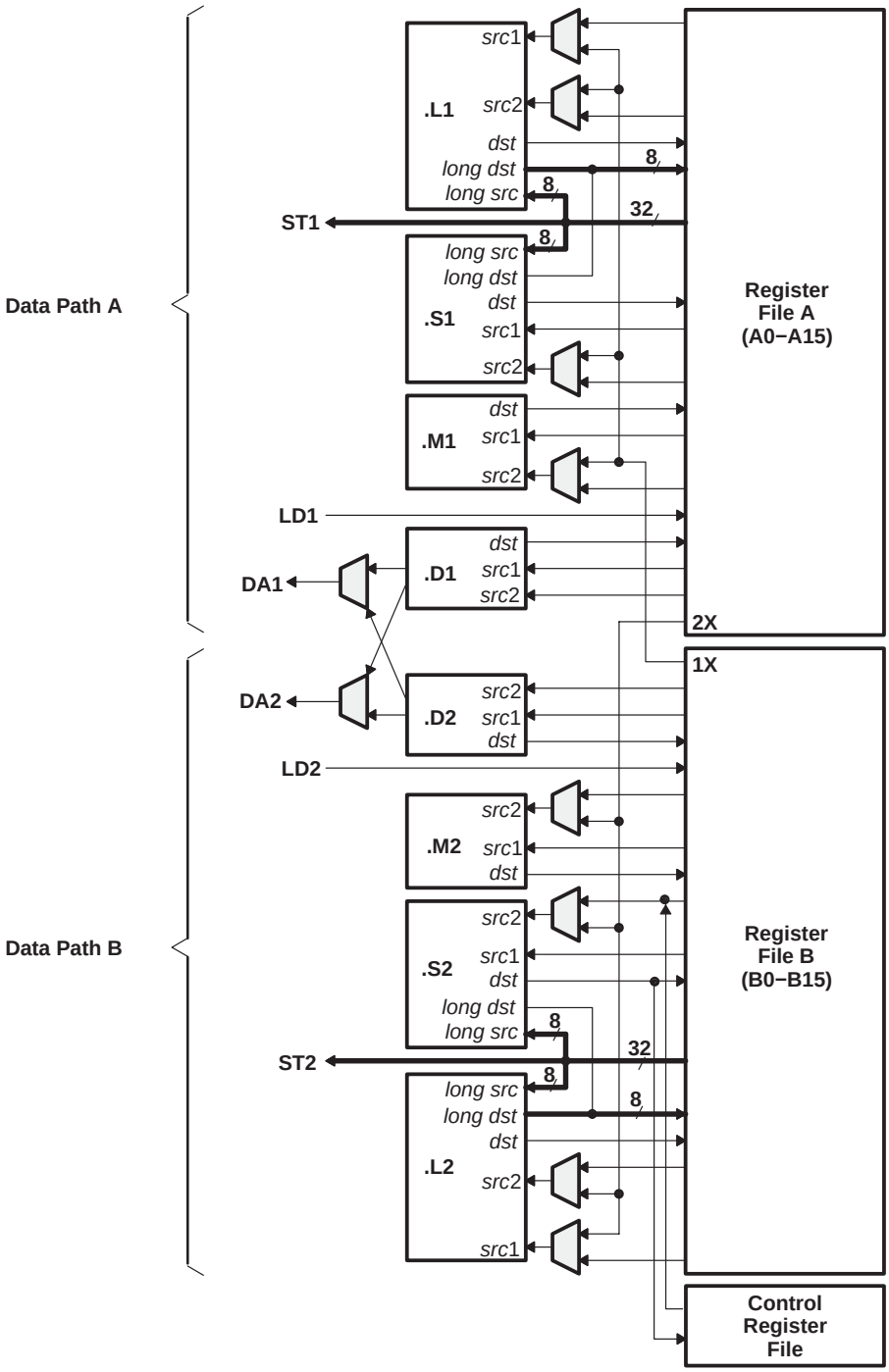

Figure 1. TMS320C62x™ CPU (DSP Core) Data Paths

memory map summary

Table 2 shows the memory map address ranges of the C6211/C6211B devices. Internal memory is always located at address 0 and can be used as both program and data memory. The C6211/C6211B configuration registers for the common peripherals are located at the same hex address ranges. The external memory address ranges in the C6211/C6211B devices begin at the address location 0x8000 0000.

Table 2. TMS320C6211/C6211B Memory Map Summary

MEMORY BLOCK DESCRIPTION	BLOCK SIZE (BYTES)	HEX ADDRESS RANGE
Internal RAM (L2)	64K	0000 0000 – 0000 FFFF
Reserved	24M – 64K	0001 0000 – 017F FFFF
External Memory Interface (EMIF) Registers	256K	0180 0000 – 0183 FFFF
L2 Registers	256K	0184 0000 – 0187 FFFF
HPI Registers	256K	0188 0000 – 018B FFFF
McBSP 0 Registers	256K	018C 0000 – 018F FFFF
McBSP 1 Registers	256K	0190 0000 – 0193 FFFF
Timer 0 Registers	256K	0194 0000 – 0197 FFFF
Timer 1 Registers	256K	0198 0000 – 019B FFFF
Interrupt Selector Registers	256K	019C 0000 – 019F FFFF
EDMA RAM and EDMA Registers	256K	01A0 0000 – 01A3 FFFF
Reserved	6M – 256K	01A4 0000 – 01FF FFFF
QDMA Registers	52	0200 0000 – 0200 0033
Reserved	736M – 52	0200 0034 – 2FFF FFFF
McBSP 0/1 Data	256M	3000 0000 – 3FFF FFFF
Reserved	1G	4000 0000 – 7FFF FFFF
EMIF CE0†	256M	8000 0000 – 8FFF FFFF
EMIF CE1†	256M	9000 0000 – 9FFF FFFF
EMIF CE2†	256M	A000 0000 – AFFF FFFF
EMIF CE3†	256M	B000 0000 – BFFF FFFF
Reserved	1G	C000 0000 – FFFF FFFF

† The number of EMIF address pins (EA[21:2]) limits the maximum addressable memory (SDRAM) to 128MB per CE space. To get 256MB of addressable memory, additional general-purpose output pin or external logic is required.

peripheral register descriptions

Table 3 through Table 13 identify the peripheral registers for the C6211/C6211B device by their register names, acronyms, and hex address or hex address range. For more detailed information on the register contents, bit names, and their descriptions, see the *TMS320C6000 DSP Peripherals Overview Reference Guide* (literature number SPRU190).

Table 3. EMIF Registers

HEX ADDRESS RANGE	ACRONYM	REGISTER NAME
0180 0000	GBLCTL	EMIF global control
0180 0004	CECTL1	EMIF CE1 space control
0180 0008	CECTL0	EMIF CE0 space control
0180 000C	−	Reserved
0180 0010	CECTL2	EMIF CE2 space control
0180 0014	CECTL3	EMIF CE3 space control
0180 0018	SDCTL	EMIF SDRAM control
0180 001C	SDTIM	EMIF SDRAM refresh control
0180 0020	SDEXT	EMIF SDRAM extension
0180 0024 − 0183 FFFF	−	Reserved

Table 4. L2 Cache Registers

HEX ADDRESS RANGE	ACRONYM	REGISTER NAME
0184 0000	CCFG	Cache configuration register
0184 4000	L2FBAR	L2 flush base address register
0184 4004	L2FWC	L2 flush word count register
0184 4010	L2CBAR	L2 clean base address register
0184 4014	L2CWC	L2 clean word count register
0184 4020	L1PFBAR	L1P flush base address register
0184 4024	L1PFWC	L1P flush word count register
0184 4030	L1DFBAR	L1D flush base address register
0184 4034	L1DFWC	L1D flush word count register
0184 5000	L2FLUSH	L2 flush register
0184 5004	L2CLEAN	L2 clean register
0184 8200	MAR0	Controls CE0 range 8000 0000 − 80FF FFFF
0184 8204	MAR1	Controls CE0 range 8100 0000 − 81FF FFFF
0184 8208	MAR2	Controls CE0 range 8200 0000 − 82FF FFFF
0184 820C	MAR3	Controls CE0 range 8300 0000 − 83FF FFFF
0184 8240	MAR4	Controls CE1 range 9000 0000 − 90FF FFFF
0184 8244	MAR5	Controls CE1 range 9100 0000 − 91FF FFFF
0184 8248	MAR6	Controls CE1 range 9200 0000 − 92FF FFFF
0184 824C	MAR7	Controls CE1 range 9300 0000 − 93FF FFFF
0184 8280	MAR8	Controls CE2 range A000 0000 − A0FF FFFF
0184 8284	MAR9	Controls CE2 range A100 0000 − A1FF FFFF
0184 8288	MAR10	Controls CE2 range A200 0000 − A2FF FFFF
0184 828C	MAR11	Controls CE2 range A300 0000 − A3FF FFFF
0184 82C0	MAR12	Controls CE3 range B000 0000 − B0FF FFFF
0184 82C4	MAR13	Controls CE3 range B100 0000 − B1FF FFFF
0184 82C8	MAR14	Controls CE3 range B200 0000 − B2FF FFFF
0184 82CC	MAR15	Controls CE3 range B300 0000 − B3FF FFFF
0184 82D0 − 0187 FFFF	−	Reserved

peripheral register descriptions (continued)

Table 5. EDMA Registers

HEX ADDRESS RANGE	ACRONYM	REGISTER NAME
01A0 FF9C − 01A0 FFDC	−	Reserved
01A0 FFE0	PQSR	Priority queue status register
01A0 FFE4	CIPR	Channel interrupt pending register
01A0 FFE8	CIER	Channel interrupt enable register
01A0 FFEC	CCER	Channel chain enable register
01A0 FFF0	ER	Event register
01A0 FFF4	EER	Event enable register
01A0 FFF8	ECR	Event clear register
01A0 FFFC	ESR	Event set register
01A1 0000 − 01A3 FFFF	–	Reserved

Table 6. EDMA Parameter RAM†

HEX ADDRESS RANGE	ACRONYM	REGISTER NAME
01A0 0000 − 01A0 0017	−	Parameters for Event 0 (6 words)
01A0 0018 − 01A0 002F	−	Parameters for Event 1 (6 words)
01A0 0030 − 01A0 0047	−	Parameters for Event 2 (6 words)
01A0 0048 − 01A0 005F	−	Parameters for Event 3 (6 words)
01A0 0060 − 01A0 0077	−	Parameters for Event 4 (6 words)
01A0 0078 − 01A0 008F	−	Parameters for Event 5 (6 words)
01A0 0090 − 01A0 00A7	−	Parameters for Event 6 (6 words)
01A0 00A8 − 01A0 00BF	−	Parameters for Event 7 (6 words)
01A0 00C0 − 01A0 00D7	−	Parameters for Event 8 (6 words)
01A0 00D8 − 01A0 00EF	−	Parameters for Event 9 (6 words)
01A0 00F0 − 01A0 00107	−	Parameters for Event 10 (6 words)
01A0 0108 − 01A0 011F	−	Parameters for Event 11 (6 words)
01A0 0120 − 01A0 0137	−	Parameters for Event 12 (6 words)
01A0 0138 − 01A0 014F	−	Parameters for Event 13 (6 words)
01A0 0150 − 01A0 0167	−	Parameters for Event 14 (6 words)
01A0 0168 − 01A0 017F	−	Parameters for Event 15 (6 words)
01A0 0180 − 01A0 0197	−	Reload/link parameters for Event M (6 words)
01A0 0198 − 01A0 01AF	−	Reload/link parameters for Event N (6 words)
...		...
01A0 07E0 − 01A0 07F7	−	Reload/link parameters for Event Z (6 words)
01A0 07F8 − 01A0 07FF	−	Scratch pad area (2 words)

† The C6211/C6211B device has sixty-nine parameter sets [six (6) words each] that can be used to reload/link EDMA transfers.

peripheral register descriptions (continued)

Table 7. Quick DMA (QDMA) and Pseudo Registers†

HEX ADDRESS RANGE	ACRONYM	REGISTER NAME
0200 0000	QOPT	QDMA options parameter register
0200 0004	QSRC	QDMA source address register
0200 0008	QCNT	QDMA frame count register
0200 000C	QDST	QDMA destination address register
0200 0010	QIDX	QDMA index register
0200 0014 − 0200 001C	−	Reserved
0200 0020	QSOPT	QDMA pseudo options register
0200 0024	QSSRC	QDMA pseudo source address register
0200 0028	QSCNT	QDMA pseudo frame count register
0200 002C	QSDST	QDMA pseudo destination address register
0200 0030	QSIDX	QDMA pseudo index register

† All the QDMA and Pseudo registers are write-accessible only

Table 8. Interrupt Selector Registers

HEX ADDRESS RANGE	ACRONYM	REGISTER NAME	COMMENTS
019C 0000	MUXH	Interrupt multiplexer high	Selects which interrupts drive CPU interrupts 10−15 (INT10−INT15)
019C 0004	MUXL	Interrupt multiplexer low	Selects which interrupts drive CPU interrupts 4−9 (INT04−INT09)
019C 0008	EXTPOL	External interrupt polarity	Sets the polarity of the external interrupts (EXT_INT4−EXT_INT7)
019C 000C − 019F FFFF	−	Reserved	

peripheral register descriptions (continued)

Table 9. McBSP 0 Registers

HEX ADDRESS RANGE	ACRONYM	REGISTER NAME	COMMENTS
018C 0000	DRR0	McBSP0 data receive register via Peripheral Bus	The CPU and DMA/EDMA controller can only read this register; they cannot write to it.
0x3000 0000 − 0x33FF FFFF	DRR0	McBSP0 data receive register via EDMA Bus	
018C 0004	DXR0	McBSP0 data transmit register via Peripheral Bus	
0x3000 0000 − 0x33FF FFFF	DXR0	McBSP0 data transmit register via EDMA Bus	
018C 0008	SPCR0	McBSP0 serial port control register	
018C 000C	RCR0	McBSP0 receive control register	
018C 0010	XCR0	McBSP0 transmit control register	
018C 0014	SRGR0	McBSP0 sample rate generator register	
018C 0018	MCR0	McBSP0 multichannel control register	
018C 001C	RCER0	McBSP0 receive channel enable register	
018C 0020	XCER0	McBSP0 transmit channel enable register	
018C 0024	PCR0	McBSP0 pin control register	
018C 0028 − 018F FFFF	−	Reserved	

Table 10. McBSP 1 Registers

HEX ADDRESS RANGE	ACRONYM	REGISTER NAME	COMMENTS
0190 0000	DRR1	Data receive register via Peripheral Bus	The CPU and DMA/EDMA controller can only read this register; they cannot write to it.
0x3400 0000 − 0x37FF FFFF	DRR1	McBSP1 data receive register via EDMA Bus	
0190 0004	DXR1	McBSP1 data transmit register via Peripheral Bus	
0x3400 0000 − 0x37FF FFFF	DXR1	McBSP1 data transmit register via EDMA Bus	
0190 0008	SPCR1	McBSP1 serial port control register	
0190 000C	RCR1	McBSP1 receive control register	
0190 0010	XCR1	McBSP1 transmit control register	
0190 0014	SRGR1	McBSP1 sample rate generator register	
0190 0018	MCR1	McBSP1 multichannel control register	
0190 001C	RCER1	McBSP1 receive channel enable register	
0190 0020	XCER1	McBSP1 transmit channel enable register	
0190 0024	PCR1	McBSP1 pin control register	
0190 0028 − 0193 FFFF	−	Reserved	

peripheral register descriptions (continued)

Table 11. Timer 0 Registers

HEX ADDRESS RANGE	ACRONYM	REGISTER NAME	COMMENTS
0194 0000	CTL0	Timer 0 control register	Determines the operating mode of the timer, monitors the timer status, and controls the function of the TOUT pin.
0194 0004	PRD0	Timer 0 period register	Contains the number of timer input clock cycles to count. This number controls the TSTAT signal frequency.
0194 0008	CNT0	Timer 0 counter register	Contains the current value of the incrementing counter.
0194 000C − 0197 FFFF	−	Reserved	

Table 12. Timer 1 Registers

HEX ADDRESS RANGE	ACRONYM	REGISTER NAME	COMMENTS
0198 0000	CTL1	Timer 1 control register	Determines the operating mode of the timer, monitors the timer status, and controls the function of the TOUT pin.
0198 0004	PRD1	Timer 1 period register	Contains the number of timer input clock cycles to count. This number controls the TSTAT signal frequency.
0198 0008	CNT1	Timer 1 counter register	Contains the current value of the incrementing counter.
0198 000C − 019B FFFF	−	Reserved	

Table 13. HPI Registers

HEX ADDRESS RANGE	ACRONYM	REGISTER NAME	COMMENTS
−	HPID	HPI data register	Host read/write access only
−	HPIA	HPI address register	Host read/write access only
0188 0000	HPIC	HPI control register	Both Host/CPU read/write access
0188 0001 − 018B FFFF	−	Reserved	

PWRD bits in CPU CSR register description

Table 14 identifies the PWRD field (bits 15−10) in the CPU CSR register. These bits control the device power-down modes. For more detailed information on the PWRD bit field of the CPU CSR register, see the *TMS320C6000 CPU and Instruction Set Reference Guide* (literature number SPRU189).

Table 14. PWRD field bits in the CPU CSR Register

HEX ADDRESS RANGE	ACRONYM	REGISTER NAME	COMMENTS
−	CSR	Control status register	The PWRD field (bits 15−10 in the CPU CSR) controls the device power-down modes. Accessible by writing a value to the CSR register.

EDMA channel synchronization events

The C62x EDMA supports up to 16 EDMA channels. Four of the sixteen channels (channels 8−11) are reserved for EDMA chaining, leaving 12 EDMA channels available to service peripheral devices. Table 15 lists the source of synchronization events associated with each of the programmable EDMA channels. For the C6211/11B, the association of an event to a channel is fixed; each of the EDMA channels has one specific event associated with it. For more detailed information on the EDMA module, associated channels, and event-transfer chaining, see the *TMS320C6000 DSP Enhanced Direct Memory Access (EDMA) Controller Reference Guide* (literature number SPRU234).

Table 15. TMS320C6211/C6211B EDMA Channel Synchronization Events

EDMA CHANNEL	EVENT NAME	EVENT DESCRIPTION
0	DSP_INT	Host-port interface (HPI)-to-DSP interrupt
1	TINT0	Timer 0 interrupt
2	TINT1	Timer 1 interrupt
3	SD_INT	EMIF SDRAM timer interrupt
4	EXT_INT4	External interrupt pin 4
5	EXT_INT5	External interrupt pin 5
6	EXT_INT6	External interrupt pin 6
7	EXT_INT7	External interrupt pin 7
8†	EDMA_TCC8	EDMA transfer complete code (TCC) 1000b interrupt
9†	EDMA_TCC9	EDMA TCC 1001b interrupt
10†	EDMA_TCC10	EDMA TCC 1010b interrupt
11†	EDMA_TCC11	EDMA TCC 1011b interrupt
12	XEVT0	McBSP0 transmit event
13	REVT0	McBSP0 receive event
14	XEVT1	McBSP1 transmit event
15	REVT1	McBSP1 receive event

† EDMA channels 8 through 11 are used for transfer chaining only. For more detailed information on event-transfer chaining, see the *TMS320C6000 DSP Enhanced Direct Memory Access (EDMA) Controller Reference Guide* (literature number SPRU234).

interrupt sources and interrupt selector

The C62x DSP core supports 16 prioritized interrupts, which are listed in Table 16. The highest-priority interrupt is INT_00 (dedicated to RESET) while the lowest-priority interrupt is INT_15. The first four interrupts (INT_00−INT_03) are non-maskable and fixed. The remaining interrupts (INT_04−INT_15) are maskable and default to the interrupt source specified in Table 16. The interrupt source for interrupts 4−15 can be programmed by modifying the selector value (binary value) in the corresponding fields of the Interrupt Selector Control registers: MUXH (address 0x019C0000) and MUXL (address 0x019C0004).

Table 16. C6211/C6211B DSP Interrupts

CPU INTERRUPT NUMBER	INTERRUPT SELECTOR CONTROL REGISTER	SELECTOR VALUE (BINARY)	INTERRUPT EVENT	INTERRUPT SOURCE
INT_00†	−	−	RESET	
INT_01†	−	−	NMI	
INT_02†	−	−	Reserved	Reserved. Do not use.
INT_03†	−	−	Reserved	Reserved. Do not use.
INT_04‡	MUXL[4:0]	00100	EXT_INT4	External interrupt pin 4
INT_05‡	MUXL[9:5]	00101	EXT_INT5	External interrupt pin 5
INT_06‡	MUXL[14:10]	00110	EXT_INT6	External interrupt pin 6
INT_07‡	MUXL[20:16]	00111	EXT_INT7	External interrupt pin 7
INT_08‡	MUXL[25:21]	01000	EDMA_INT	EDMA channel (0 through 15) interrupt
INT_09‡	MUXL[30:26]	01001	Reserved	None, but programmable
INT_10‡	MUXH[4:0]	00011	SD_INT	EMIF SDRAM timer interrupt
INT_11‡	MUXH[9:5]	01010	Reserved	None, but programmable
INT_12‡	MUXH[14:10]	01011	Reserved	None, but programmable
INT_13‡	MUXH[20:16]	00000	DSP_INT	Host-port interface (HPI)-to-DSP interrupt
INT_14‡	MUXH[25:21]	00001	TINT0	Timer 0 interrupt
INT_15‡	MUXH[30:26]	00010	TINT1	Timer 1 interrupt
−	−	01100	XINT0	McBSP0 transmit interrupt
−	−	01101	RINT0	McBSP0 receive interrupt
−	−	01110	XINT1	McBSP1 transmit interrupt
−	−	01111	RINT1	McBSP1 receive interrupt
−	−	10000 − 11111	Reserved	Reserved. Do not use.

† Interrupts INT_00 through INT_03 are non-maskable and fixed.
‡ Interrupts INT_04 through INT_15 are programmable by modifying the binary selector values in the Interrupt Selector Control registers fields. Table 16 shows the default interrupt sources for Interrupts INT_04 through INT_15. For more detailed information on interrupt sources and selection, see the *TMS320C6000 DSP Interrupt Selector Reference Guide* (literature number SPRU646).

signal groups description

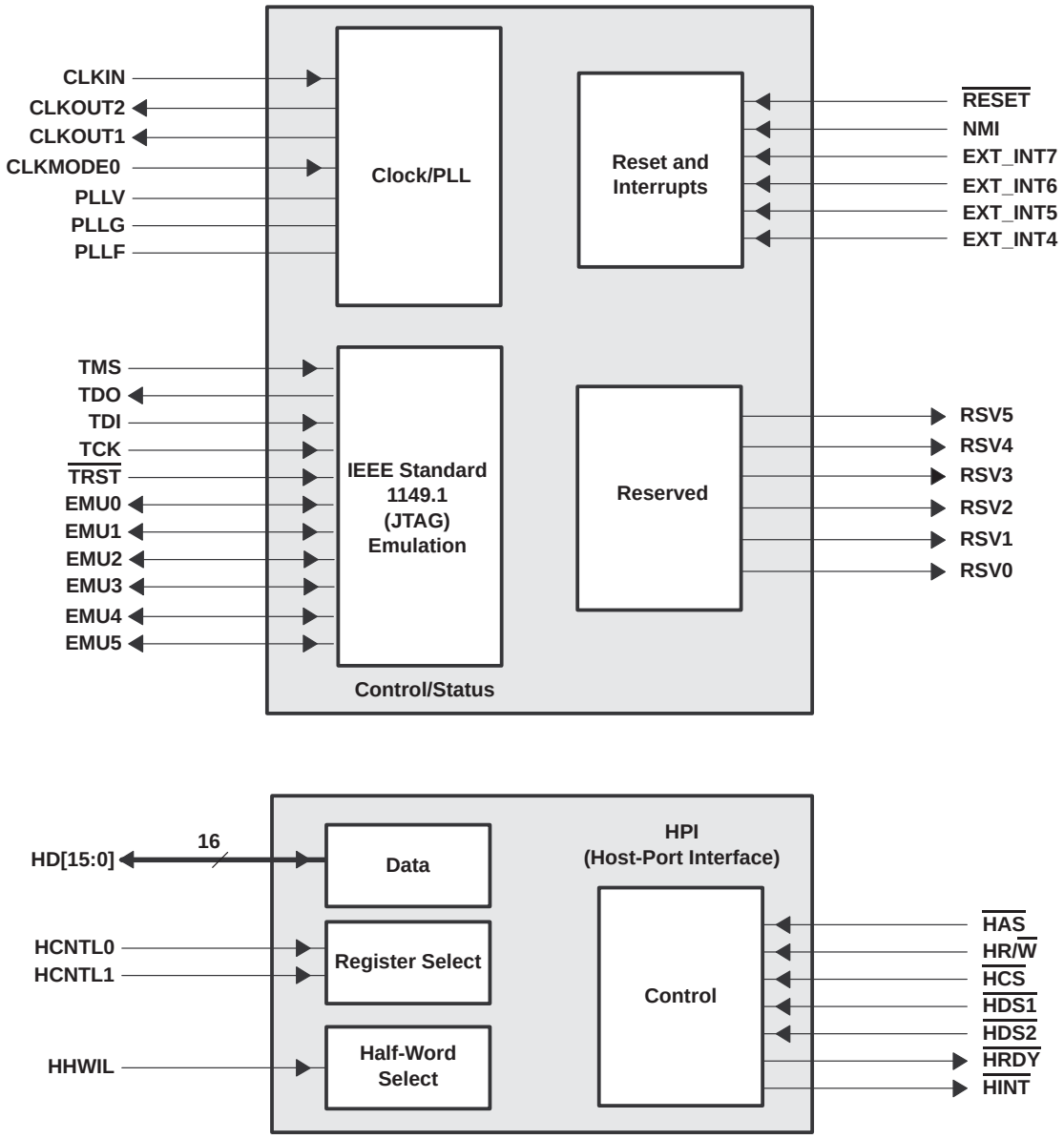

Figure 2. CPU (DSP Core) and Peripheral Signals

signal groups description (continued)

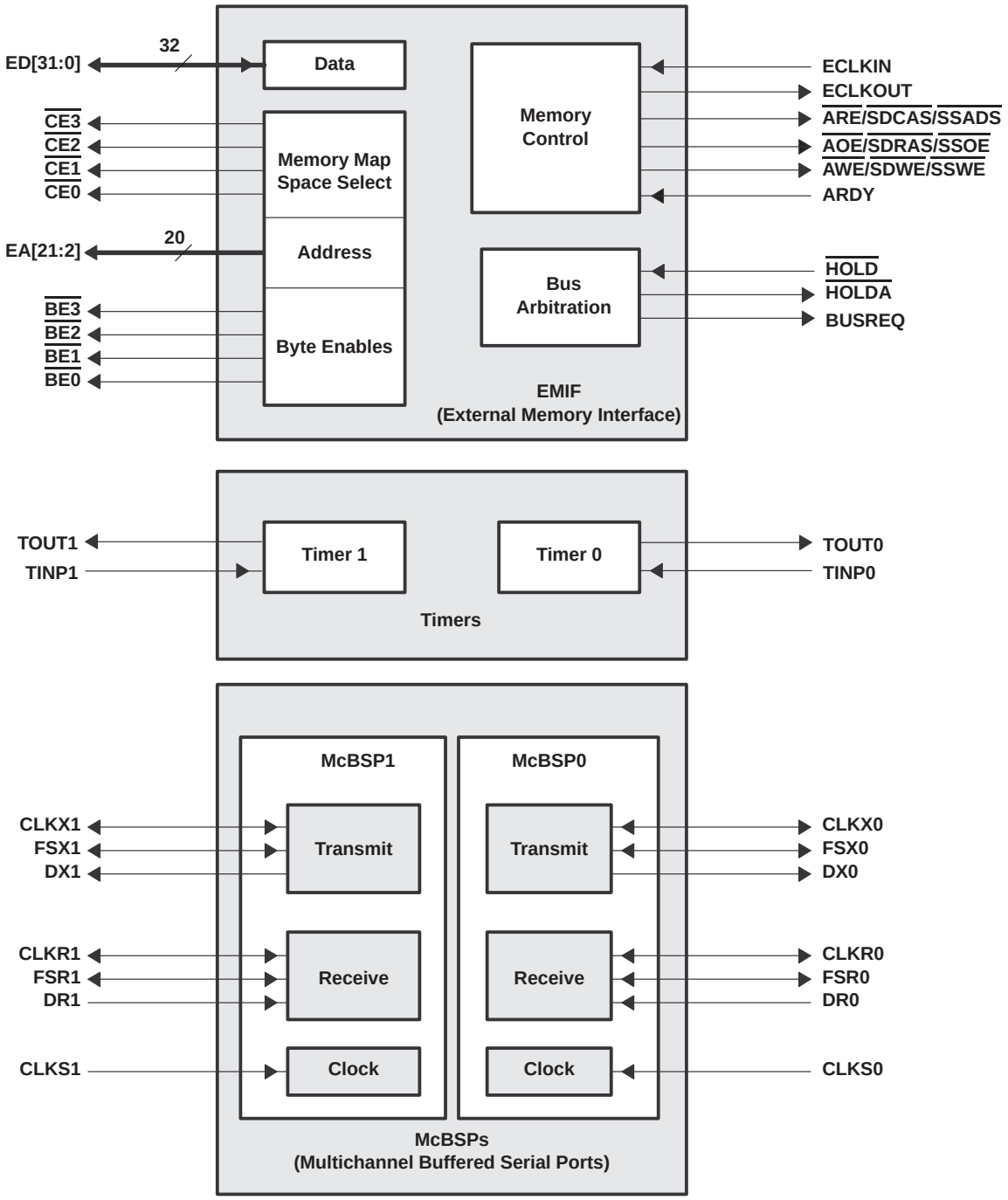

Figure 3. Peripheral Signals

Terminal Functions

SIGNAL NAME	NO.	TYPE†	IPD/ IPU‡	DESCRIPTION
CLOCK/PLL				
CLKIN	A3	I	IPD	Clock Input
CLKOUT1	D7	O	IPD	Clock output at device speed The CLK1EN bit in the EMIF GBLCTL register controls the CLKOUT1 pin. CLK1EN = 0: CLKOUT1 is disabled CLK1EN = 1: CLKOUT1 enabled to clock [default]
CLKOUT2	Y12	O	IPD	Clock output at half of device speed When the CLKOUT2 pin is enabled, the CLK2EN bit in the EMIF global control register (GBLCTL) controls the CLKOUT2 pin. CLK2EN = 0: CLKOUT2 is disabled CLK2EN = 1: CLKOUT1 enabled to clock [default]
CLKMODE0	C4	I	IPU	Clock mode select • Selects whether the CPU clock frequency = input clock frequency x4 or x1
PLLV§	A4	A¶		PLL analog V_{CC} connection for the low-pass filter
PLLG§	C6	A¶		PLL analog GND connection for the low-pass filter
PLLF	B5	A¶		PLL low-pass filter connection to external components and a bypass capacitor
JTAG EMULATION				
TMS	B7	I	IPU	JTAG test-port mode select
TDO	A8	O/Z	IPU	JTAG test-port data out
TDI	A7	I	IPU	JTAG test-port data in
TCK	A6	I	IPU	JTAG test-port clock
$\overline{\text{TRST}}$	B6	I	IPD	JTAG test-port reset
EMU5	B12	I/O/Z	IPU	Emulation pin 5. Reserved for future use, leave unconnected.
EMU4	C11	I/O/Z	IPU	Emulation pin 4. Reserved for future use, leave unconnected.
EMU3	B10	I/O/Z	IPU	Emulation pin 3. Reserved for future use, leave unconnected.
EMU2	D10	I/O/Z	IPU	Emulation pin 2. Reserved for future use, leave unconnected.
EMU1	B9	I/O/Z	IPU	Emulation pin 1#
EMU0	D9	I/O/Z	IPU	Emulation pin 0#
RESETS AND INTERRUPTS				
$\overline{\text{RESET}}$	A13	I	IPU	Device reset
NMI	C13	I	IPD	Nonmaskable interrupt • Edge-driven (rising edge) Any noise on the NMI pin may trigger an NMI interrupt; therefore, if the NMI pin is not used, it is recommended that the NMI pin be grounded versus relying on the IPD.
EXT_INT7	E3	I	IPU	External interrupts • Edge-driven • Polarity independently selected via the External Interrupt Polarity Register bits (EXTPOL.[3:0])
EXT_INT6	D2			
EXT_INT5	C1			
EXT_INT4	C2			
HOST-PORT INTERFACE (HPI)				
$\overline{\text{HINT}}$	J20	O	IPU	Host interrupt (from DSP to host)
HCNTL1	G19	I	IPU	Host control − selects between control, address, or data registers
HCNTL0	G18	I	IPU	Host control − selects between control, address, or data registers
HHWIL	H20	I	IPU	Host half-word select − first or second half-word (not necessarily high or low order)
HR/$\overline{\text{W}}$	G20	I	IPU	Host read or write select

† I = Input, O = Output, Z = High impedance, S = Supply voltage, GND = Ground
‡ IPD = Internal pulldown, IPU = Internal pullup. (These IPD/IPU signal pins feature a 30-kΩ IPD or IPU resistor. To pull up a signal to the opposite supply rail, a 1-kΩ resistor should be used.)

§ PLLV and PLLG are not part of external voltage supply or ground. See the CLOCK/PLL documentation for information on how to connect these pins.
¶ A = Analog signal (PLL Filter)
# The EMU0 and EMU1 pins are internally pulled up with 30-kΩ resistors; therefore, for emulation and normal operation, no external pullup/pulldown resistors are necessary. However, for boundary scan operation, pull down the EMU1 and EMU0 pins with a dedicated 1-kΩ resistor.

Terminal Functions (Continued)

SIGNAL NAME	SIGNAL NO.	TYPE†	IPD/ IPU‡	DESCRIPTION
HOST-PORT INTERFACE (HPI) (CONTINUED)				
HD15	B14	I/O/Z	IPU	Host-port data • Used for transfer of data, address, and control • Also controls initialization of DSP modes at reset via pullup/pulldown resistors − Device Endian mode HD8: 0 − Big Endian 1 − Little Endian − Boot mode HD[4:3]: 00 − HPI boot 01 − 8-bit ROM boot with default timings 10 − 16-bit ROM boot with default timings 11 − 32-bit ROM boot with default timings
HD14	C14		IPU	
HD13	A15		IPU	
HD12	C15		IPU	
HD11	A16		IPU	
HD10	B16		IPU	
HD9	C16		IPU	
HD8	B17		IPU	
HD7	A18		IPU	
HD6	C17		IPU	
HD5	B18		IPU	
HD4	C19		IPD	
HD3	C20		IPU	
HD2	D18		IPU	
HD1	D20		IPU	
HD0	E20		IPU	
$\overline{HAS}$	E18	I	IPU	Host address strobe
$\overline{HCS}$	F20	I	IPU	Host chip select
$\overline{HDS1}$	E19	I	IPU	Host data strobe 1
$\overline{HDS2}$	F18	I	IPU	Host data strobe 2
$\overline{HRDY}$	H19	O	IPD	Host ready (from DSP to host)
EMIF − CONTROL SIGNALS COMMON TO ALL TYPES OF MEMORY				
$\overline{CE3}$	V6	O/Z	IPU	Memory space enables • Enabled by bits 28 through 31 of the word address • Only one asserted during any external data access
$\overline{CE2}$	W6	O/Z	IPU	
$\overline{CE1}$	W18	O/Z	IPU	
$\overline{CE0}$	V17	O/Z	IPU	
$\overline{BE3}$	V5	O/Z	IPU	Byte-enable control • Decoded from the two lowest bits of the internal address • Byte-write enables for most types of memory • Can be directly connected to SDRAM read and write mask signal (SDQM)
$\overline{BE2}$	Y4	O/Z	IPU	
$\overline{BE1}$	U19	O/Z	IPU	
$\overline{BE0}$	V20	O/Z	IPU	

† I = Input, O = Output, Z = High impedance, S = Supply voltage, GND = Ground
‡ IPD = Internal pulldown, IPU = Internal pullup. (These IPD/IPU signal pins feature a 30-kΩ IPD or IPU resistor. To pull up a signal to the opposite supply rail, a 1-kΩ resistor should be used.)

Terminal Functions (Continued)

SIGNAL NAME	SIGNAL NO.	TYPE†	IPD/ IPU‡	DESCRIPTION
EMIF − BUS ARBITRATION				
$\overline{\text{HOLDA}}$	J18	O	IPU	Hold-request-acknowledge to the host
$\overline{\text{HOLD}}$	J17	I	IPU	Hold request from the host
BUSREQ	J19	O	IPU	Bus request output
EMIF − ASYNCHRONOUS/SYNCHRONOUS DRAM/SYNCHRONOUS BURST SRAM MEMORY CONTROL				
ECLKIN	Y11	I	IPD	EMIF input clock
ECLKOUT	Y10	O	IPD	EMIF output clock (based on ECLKIN)
$\overline{\text{ARE}}$/$\overline{\text{SDCAS}}$/ $\overline{\text{SSADS}}$	V11	O/Z	IPU	Asynchronous memory read enable/SDRAM column-address strobe/SBSRAM address strobe
$\overline{\text{AOE}}$/$\overline{\text{SDRAS}}$/ $\overline{\text{SSOE}}$	W10	O/Z	IPU	Asynchronous memory output enable/SDRAM row-address strobe/SBSRAM output enable
$\overline{\text{AWE}}$/$\overline{\text{SDWE}}$/ $\overline{\text{SSWE}}$	V12	O/Z	IPU	Asynchronous memory write enable/SDRAM write enable/SBSRAM write enable
ARDY	Y5	I	IPU	Asynchronous memory ready input
EMIF − ADDRESS				
EA21	U18	O/Z	IPU	EMIF external address
EA20	Y18			
EA19	W17			
EA18	Y16			
EA17	V16			
EA16	Y15			
EA15	W15			
EA14	Y14			
EA13	W14			
EA12	V14			
EA11	W13			
EA10	V10			
EA9	Y9			
EA8	V9			
EA7	Y8			
EA6	W8			
EA5	V8			
EA4	W7			
EA3	V7			
EA2	Y6			

† I = Input, O = Output, Z = High impedance, S = Supply voltage, GND = Ground

‡ IPD = Internal pulldown, IPU = Internal pullup. (These IPD/IPU signal pins feature a 30-kΩ IPD or IPU resistor. To pull up a signal to the opposite supply rail, a 1-kΩ resistor should be used.)

Terminal Functions (Continued)

SIGNAL NAME	SIGNAL NO.	TYPE†	IPD/ IPU‡	DESCRIPTION
EMIF − DATA				
ED31	N3	I/O/Z	IPU	External data
ED30	P3			
ED29	P2			
ED28	P1			
ED27	R2			
ED26	R3			
ED25	T2			
ED24	T1			
ED23	U3			
ED22	U1			
ED21	U2			
ED20	V1			
ED19	V2			
ED18	Y3			
ED17	W4			
ED16	V4			
ED15	T19			
ED14	T20			
ED13	T18			
ED12	R20			
ED11	R19			
ED10	P20			
ED9	P18			
ED8	N20			
ED7	N19			
ED6	N18			
ED5	M20			
ED4	M19			
ED3	L19			
ED2	L18			
ED1	K19			
ED0	K18			

† I = Input, O = Output, Z = High impedance, S = Supply voltage, GND = Ground
‡ IPD = Internal pulldown, IPU = Internal pullup. (These IPD/IPU signal pins feature a 30-kΩ IPD or IPU resistor. To pull up a signal to the opposite supply rail, a 1-kΩ resistor should be used.)

Terminal Functions (Continued)

SIGNAL NAME	SIGNAL NO.	TYPE†	IPD/ IPU‡	DESCRIPTION
TIMER 1				
TOUT1	F1	O	IPD	Timer 1 or general-purpose output
TINP1	F2	I	IPD	Timer 1 or general-purpose input
TIMER 0				
TOUT0	G1	O	IPD	Timer 0 or general-purpose output
TINP0	G2	I	IPD	Timer 0 or general-purpose input
MULTICHANNEL BUFFERED SERIAL PORT 1 (McBSP1)				
CLKS1	E1	I	IPD	External clock source (as opposed to internal)
CLKR1	M1	I/O/Z	IPD	Receive clock
CLKX1	L3	I/O/Z	IPD	Transmit clock
DR1	M2	I	IPU	Receive data
DX1	L2	O/Z	IPU	Transmit data
FSR1	M3	I/O/Z	IPD	Receive frame sync
FSX1	L1	I/O/Z	IPD	Transmit frame sync
MULTICHANNEL BUFFERED SERIAL PORT 0 (McBSP0)				
CLKS0	K3	I	IPD	External clock source (as opposed to internal)
CLKR0	H3	I/O/Z	IPD	Receive clock
CLKX0	G3	I/O/Z	IPD	Transmit clock
DR0	J1	I	IPU	Receive data
DX0	H2	O/Z	IPU	Transmit data
FSR0	J3	I/O/Z	IPD	Receive frame sync
FSX0	H1	I/O/Z	IPD	Transmit frame sync
RESERVED FOR TEST				
RSV0	C12	O	IPU	Reserved (leave unconnected, ***do not*** connect to power or ground)
RSV1	D12	O	IPU	Reserved (leave unconnected, ***do not*** connect to power or ground)
RSV2	A5	O	IPU	Reserved (leave unconnected, ***do not*** connect to power or ground)
RSV3	D3	O		Reserved (leave unconnected, ***do not*** connect to power or ground)
RSV4	N2	O		Reserved (leave unconnected, ***do not*** connect to power or ground)
RSV5	Y20	O		Reserved (leave unconnected, ***do not*** connect to power or ground)

† I = Input, O = Output, Z = High impedance, S = Supply voltage, GND = Ground

‡ IPD = Internal pulldown, IPU = Internal pullup. (These IPD/IPU signal pins feature a 30-kΩ IPD or IPU resistor. To pull up a signal to the opposite supply rail, a 1-kΩ resistor should be used.)

Terminal Functions (Continued)

SIGNAL NAME	SIGNAL NO.	TYPE†	DESCRIPTION
SUPPLY VOLTAGE PINS			
DV_{DD}	A17	S	3.3-V supply voltage
	B3		
	B8		
	B13		
	C5		
	C10		
	D1		
	D16		
	D19		
	F3		
	H18		
	J2		
	M18		
	N1		
	R1		
	R18		
	T3		
	U5		
	U7		
	U12		
	U16		
	V13		
	V15		
	V19		
	W3		
	W9		
	W12		
	Y7		
	Y17		
CV_{DD}	A9	S	1.8-V supply voltage
	A10		
	A12		
	B2		
	B19		
	C3		
	C7		
	C18		
	D5		
	D6		
	D11		
	D14		

† I = Input, O = Output, Z = High impedance, S = Supply voltage, GND = Ground

Terminal Functions (Continued)

SIGNAL NAME	SIGNAL NO.	TYPE†	DESCRIPTION
SUPPLY VOLTAGE PINS (CONTINUED)			
CV_{DD}	D15	S	1.8-V supply voltage
	F4		
	F17		
	K1		
	K4		
	K17		
	L4		
	L17		
	L20		
	R4		
	R17		
	U6		
	U10		
	U11		
	U14		
	U15		
	V3		
	V18		
	W2		
	W19		
GROUND PINS			
V_{SS}	A1	GND	Ground pins
	A2		
	A11		
	A14		
	A19		
	A20		
	B1		
	B4		
	B11		
	B15		
	B20		
	C8		
	C9		
	D4		
	D8		
	D13		
	D17		
	E2		

† I = Input, O = Output, Z = High impedance, S = Supply voltage, GND = Ground

Terminal Functions (Continued)

SIGNAL NAME	SIGNAL NO.	TYPE†	DESCRIPTION
GROUND PINS (CONTINUED)			
V_{SS}	E4	GND	Ground pins
	E17		
	F19		
	G4		
	G17		
	H4		
	H17		
	J4		
	K2		
	K20		
	M4		
	M17		
	N4		
	N17		
	P4		
	P17		
	P19		
	T4		
	T17		
	U4		
	U8		
	U9		
	U13		
	U17		
	U20		
	W1		
	W5		
	W11		
	W16		
	W20		
	Y1		
	Y2		
	Y13		
	Y19		

† I = Input, O = Output, Z = High impedance, S = Supply voltage, GND = Ground

development support

TI offers an extensive line of development tools for the TMS320C6000™ DSP platform, including tools to evaluate the performance of the processors, generate code, develop algorithm implementations, and fully integrate and debug software and hardware modules.

The following products support development of C6000™ DSP-based applications:

Software Development Tools:
Code Composer Studio™ Integrated Development Environment (IDE): including Editor
C/C++/Assembly Code Generation, and Debug plus additional development tools
Scalable, Real-Time Foundation Software (DSP/BIOS™), which provides the basic run-time target software needed to support any DSP application.

Hardware Development Tools:
Extended Development System (XDS™) Emulator (supports C6000™ DSP multiprocessor system debug)
EVM (Evaluation Module)

For a complete listing of development-support tools for the TMS320C6000™ DSP platform, visit the Texas Instruments web site on the Worldwide Web at http://www.ti.com uniform resource locator (URL) and select “Find Development Tools”. For device-specific tools, under “Semiconductor Products”, select “Digital Signal Processors”, choose a product family, and select the particular DSP device. For information on pricing and availability, contact the nearest TI field sales office or authorized distributor.

Code Composer Studio, DSP/BIOS, and XDS are trademarks of Texas Instruments.

device and development-support tool nomenclature

To designate the stages in the product development cycle, TI assigns prefixes to the part numbers of all DSP devices and support tools. Each DSP commercial family member has one of three prefixes: TMX, TMP, or TMS (e.g., **TMS**320C6211GFN167). Texas Instruments recommends two of three possible prefix designators for support tools: TMDX and TMDS. These prefixes represent evolutionary stages of product development from engineering prototypes (TMX/TMDX) through fully qualified production devices/tools (TMS/TMDS).

Device development evolutionary flow:

TMX Experimental device that is not necessarily representative of the final device's electrical specifications

TMP Final silicon die that conforms to the device's electrical specifications but has not completed quality and reliability verification

TMS Fully qualified production device

Support tool development evolutionary flow:

TMDX Development-support product that has not yet completed Texas Instruments internal qualification testing.

TMDS Fully qualified development-support product

TMX and TMP devices and TMDX development-support tools are shipped with the following disclaimer:

"Developmental product is intended for internal evaluation purposes."

TMS devices and TMDS development-support tools have been characterized fully, and the quality and reliability of the device have been demonstrated fully. TI's standard warranty applies.

Predictions show that prototype devices (TMX or TMP) have a greater failure rate than the standard production devices. Texas Instruments recommends that these devices not be used in any production system because their expected end-use failure rate still is undefined. Only qualified production devices are to be used.

TI device nomenclature also includes a suffix with the device family name. This suffix indicates the package type (for example, GFN), the temperature range (for example, blank is the default commercial temperature range), and the device speed range in megahertz (for example, -167 is 167 MHz).

The ZFN package, like the GFN package, is a 256-ball plastic BGA *only* with Pb-free balls. For device part numbers and further ordering information for TMS320C6211/6211B in the GFN and ZFN, package types, see the TI website (http://www.ti.com) or contact your TI sales representative.

TMS320 is a trademark of Texas Instruments.

device and development-support tool nomenclature (continued)

TMS 320 C 6211 GFN ( ) 167

PREFIX

TMX = Experimental device
TMP = Prototype device
TMS = Qualified device
SMJ = MIL-PRF-38535, QML
SM = High Rel (non-38535)

DEVICE FAMILY

32 or 320 = TMS320™ DSP family

TECHNOLOGY

C = CMOS

DEVICE SPEED RANGE

100 MHz	200 MHz
120 MHz	233 MHz
150 MHz	250 MHz
167 MHz	300 MHz

TEMPERATURE RANGE (DEFAULT: 0°C TO 90°C)

Blank = 0°C to 90°C, commercial temperature
A = −40°C to 105°C, extended temperature

PACKAGE TYPE†‡

GDP = 272-pin plastic BGA
GFN = 256-pin plastic BGA
GGP = 352-pin plastic BGA
GJC = 352-pin plastic BGA
GJL = 352-pin plastic BGA
GLS = 384-pin plastic BGA
GLW = 340-pin plastic BGA
GNY = 384-pin plastic BGA
GNZ = 352-pin plastic BGA
GLZ = 532-pin plastic BGA
GHK = 288-pin plastic MicroStar BGA™
PYP = 208-pin PowerPAD™ plastic QFP
ZFN = 256-pin plastic BGA, with Pb-free soldered balls

DEVICE§

C6000 DSPs:

C6201	C6211B	DM641	C6712
C6202	C6411	DM642	C6712C
C6202B	C6412	C6701	C6712D
C6203B	C6414	C6711	C6713
C6204	C6415	C6711B	C6713B
C6205	C6416	C6711C	
C6211	DM640	C6711D	

† BGA = Ball Grid Array
QFP = Quad Flatpack
‡ The ZFN mechanical package designator represents the version of the GFN with Pb−Free soldered balls.
§ For actual device part numbers (P/Ns) and ordering information, see the Mechanical Data section of this document or the TI website (www.ti.com).

Figure 4. TMS320C6000™ DSP Device Nomenclature (Including the TMS320C6211 and TMS320C6211B Devices)

MicroStar BGA is a trademark of Texas Instruments.

documentation support

Extensive documentation supports all TMS320™ DSP family generations of devices from product announcement through applications development. The types of documentation available include: data sheets, such as this document, with design specifications; complete user's reference guides for all devices and tools; technical briefs; development-support tools; on-line help; and hardware and software applications. The following is a brief, descriptive list of support documentation specific to the C6000™ DSP devices:

For device-specific datasheets and related documentation, visit the TI web site at: **http://www.ti.com**.

The *TMS320C6000 CPU and Instruction Set Reference Guide* (literature number SPRU189) describes the C6000™ CPU (DSP core) architecture, instruction set, pipeline, and associated interrupts.

The *TMS320C6000 DSP Peripherals Overview Reference Guide* (literature number SPRU190) provides an overview and briefly describes the functionality of the peripherals available on the C6000™ DSP platform of devices. This document also includes a table listing the peripherals available on the C6000 devices along with literature numbers and hyperlinks to the associated peripheral documents.

The *TMS320C6000 Technical Brief* (literature number SPRU197) gives an introduction to the TMS320C62x™/TMS320C67x™ devices, associated development tools, and third-party support.

The *TMS320C6000 DSP Interrupt Selector Reference Guide* (literature number SPRU646) describes the interrupt selector, interrupt selector registers, and the available interrupts in the TMS320C6000 DSPs.

The *TMS320C6000 DSP Enhanced Direct Memory Access (EDMA) Controller Reference Guide* (literature number SPRU234) describes the operation of the enhanced direct memory access (EDMA) controller in the TMS320C6000 DSPs.

The *TMS320C62x/C67x Power Consumption Summary* application report (literature number SPRA486) discusses the power consumption for user applications with the TMS320C6211 and TMS320C6211B DSP devices.

The *TMS320C6211/TMS320C6211B Digital Signal Processors Silicon Errata* (literature number SPRZ154) describes the known exceptions to the functional specifications for the TMS320C6211 and TMS320C6211B DSP devices.

The *Using IBIS Models for Timing Analysis* application report (literature number SPRA839) describes how to properly use IBIS models to attain accurate timing analysis for a given system.

The tools support documentation is electronically available within the Code Composer Studio™ Integrated Development Environment (IDE). For a complete listing of C6000™ DSP latest documentation, visit the Texas Instruments web site on the Worldwide Web at http://www.ti.com uniform resource locator (URL).

See the Worldwide Web URL for the application reports *How To Begin Development Today with the TMS320C6211 DSP* (literature number SPRA474) and *How To Begin Development with the TMS320C6711 DSP* (literature number SPRA522), which describe in more detail the similarities/differences between the C6211 and C6711 C6000™ DSP devices.

TMS320C67x is a trademark of Texas Instruments.

clock PLL

All of the internal C62x™ clocks are generated from a single source through the CLKIN pin. This source clock either drives the PLL, which multiplies the source clock in frequency to generate the internal CPU clock, or bypasses the PLL to become the internal CPU clock.

To use the PLL to generate the CPU clock, the external PLL filter circuit must be properly designed. Figure 5 shows the external PLL circuitry for either x1 (PLL bypass) or x4 PLL multiply modes. Figure 6 shows the external PLL circuitry for a system with ONLY x1 (PLL bypass) mode.

To minimize the clock jitter, a single clean power supply should power both the C62x™ device and the external clock oscillator circuit. Noise coupling into PLLF will directly impact PLL clock jitter. The minimum CLKIN rise and fall times should also be observed. For the input clock timing requirements, see the *input and output clocks* electricals section.

Rise/fall times, duty cycles (high/low pulse durations), and the load capacitance of the external clock source must meet the DSP requirements in this data sheet (see the *electrical characteristics over recommended ranges of suppy voltage and operating case temperature* table and the *input and output clocks* electricals section). Table 17 lists some examples of compatible CLKIN external clock sources.

Table 17. Compatible CLKIN External Clock Sources

COMPATIBLE PARTS FOR EXTERNAL CLOCK SOURCES (CLKIN)	PART NUMBER	MANUFACTURER
Oscillators	JITO-2	Fox Electronix
	STA series, ST4100 series	SaRonix Corporation
	SG-636	Epson America
	342	Corning Frequency Control
PLL	MK1711-S, ICS525-02	Integrated Circuit Systems

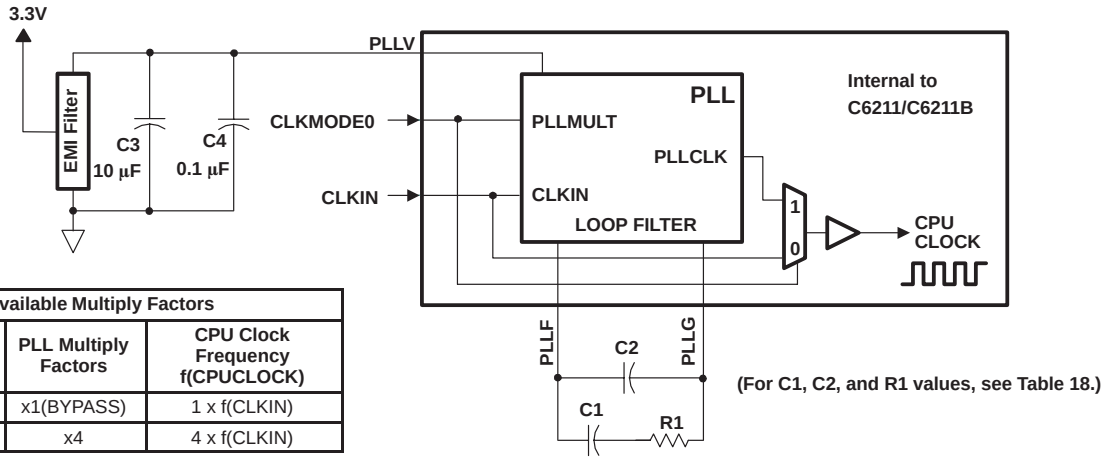

Available Multiply Factors		
CLKMODE0	PLL Multiply Factors	CPU Clock Frequency f(CPUCLOCK)
0	x1(BYPASS)	1 x f(CLKIN)
1	x4	4 x f(CLKIN)

NOTES: A. Keep the lead length and the number of vias between the PLLF pin, the PLLG pin, and R1, C1, and C2 to a minimum. In addition, place all PLL external components (R1, C1, C2, C3, C4, and the EMI Filter) as close to the C6000 device as possible. For the best performance, TI recommends that all the PLL external components be on a single side of the board without jumpers, switches, or components other than the ones shown.

B. For reduced PLL jitter, maximize the spacing between switching signals and the PLL external components (R1, C1, C2, C3, C4, and the EMI filter).

C. The 3.3-V supply for the EMI filter must be from the same 3.3-V power plane supplying the I/O voltage, DV_{DD}.

D. EMI filter manufacturer: TDK part number ACF451832-333, 223, 153, 103. Panasonic part number EXCCET103U.

Figure 5. External PLL Circuitry for Either PLL x4 Mode or x1 (Bypass) Mode

clock PLL (continued)

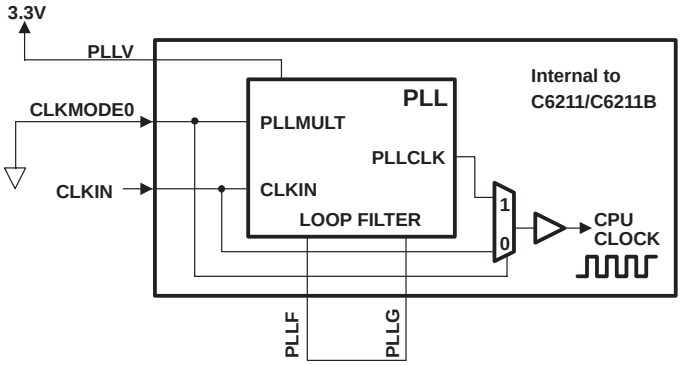

NOTES: A. For a system with ONLY PLL x1 (bypass) mode, short the PLLF terminal to the PLLG terminal.
B. The 3.3-V supply for the EMI filter must be from the same 3.3-V power plane supplying the I/O voltage, DV_{DD}.

Figure 6. External PLL Circuitry for x1 (Bypass) Mode Only

Table 18. C6211/C6211B PLL Component Selection

CLKMODE	CLKIN RANGE (MHz)	CPU CLOCK FREQUENCY (CLKOUT1) RANGE (MHz)	CLKOUT2 RANGE (MHz)	R1 [±1%] (Ω)	C1 [±10%] (nF)	C2 [±10%] (pF)	TYPICAL LOCK TIME (μs)†
x4	16.3−41.6	65−167	32.5−83	60.4	27	560	75

† Under some operating conditions, the maximum PLL lock time may vary as much as 150% from the specified typical value. For example, if the typical lock time is specified as 100 μs, the maximum value may be as long as 250 μs.

power-down mode logic

Figure 7 shows the power-down mode logic on the C6211/C6211B.

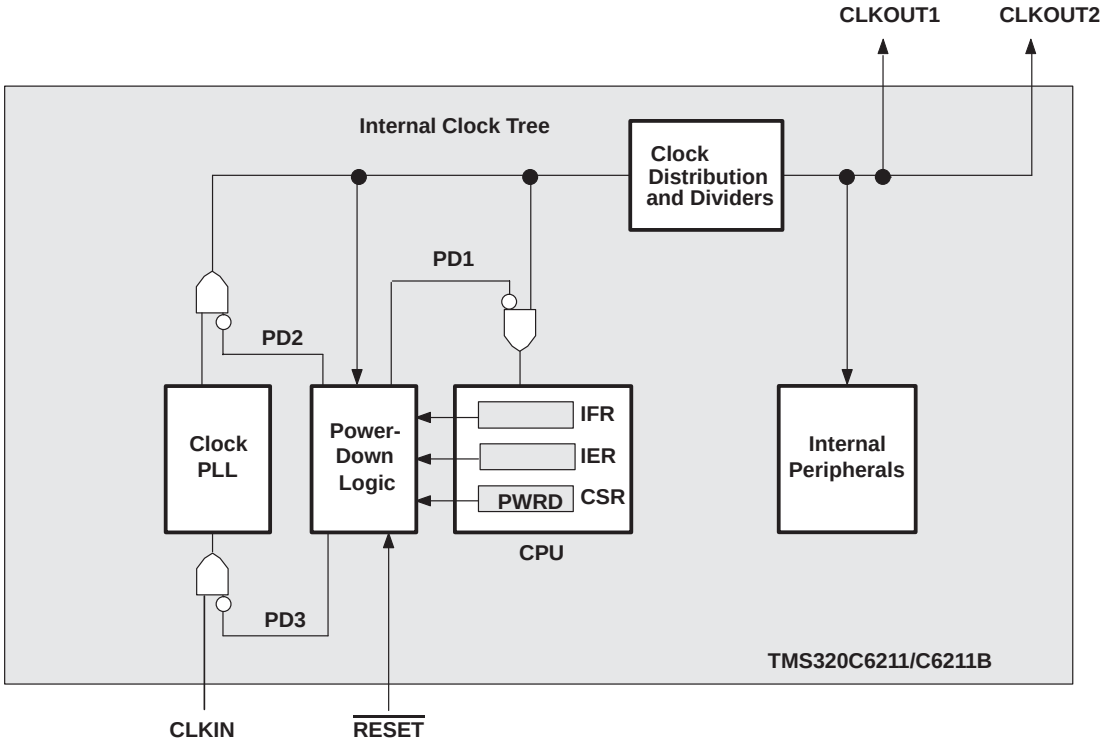

† External input clocks, with the exception of CLKIN, are *not* gated by the power-down mode logic.

Figure 7. Power-Down Mode Logic†

triggering, wake-up, and effects

The power-down modes and their wake-up methods are programmed by setting the PWRD field (bits 15−10) of the control status register (CSR). The PWRD field of the CSR is shown in Figure 8 and described in Table 19. When writing to the CSR, all bits of the PWRD field should be set at the same time. Logic 0 should be used when “writing” to the reserved bit (bit 15) of the PWRD field. The CSR is discussed in detail in the *TMS320C6000 CPU and Instruction Set Reference Guide* (literature number SPRU189).

31							16

15	14	13	12	11	10	9	8
Reserved	Enable or Non-Enabled Interrupt Wake	Enabled Interrupt Wake	PD3	PD2	PD1		
R/W-0	R/W-0	R/W-0	R/W-0	R/W-0	R/W-0		

7							0

Legend: R/W−x = Read/write reset value

NOTE: The shadowed bits are not part of the power-down logic discussion and therefore are not covered here. For information on these other bit fields in the CSR register, see the *TMS320C6000 CPU and Instruction Set Reference Guide* (literature number SPRU189).

Figure 8. PWRD Field of the CSR Register

A delay of up to nine clock cycles may occur after the instruction that sets the PWRD bits in the CSR before the PD mode takes effect. As best practice, NOPs should be padded after the PWRD bits are set in the CSR to account for this delay.

If PD1 mode is terminated by a non-enabled interrupt, the program execution returns to the instruction where PD1 took effect. If PD1 mode is terminated by an enabled interrupt, the interrupt service routine with be executed first, then the program execution returns to the instruction where PD1 took effect. In the case with an enabled interrupt, the GIE bit in the CSR and the NMIE bit in the interrupt enable register (IER) must also be set in order for the interrupt service routine to execute; otherwise, execution returns to the instruction where PD1 took effect upon PD1 mode termination by an enabled interrupt.

PD2 and PD3 modes can only be aborted by device reset. Table 19 summarizes all the power-down modes.

Table 19. Characteristics of the Power-Down Modes

PRWD FIELD (BITS 15−10)	POWER-DOWN MODE	WAKE-UP METHOD	EFFECT ON CHIP'S OPERATION
000000	No power-down	—	—
001001	PD1	Wake by an enabled interrupt	CPU halted (except for the interrupt logic) Power-down mode blocks the internal clock inputs at the boundary of the CPU, preventing most of the CPU's logic from switching. During PD1, EDMA transactions can proceed between peripherals and internal memory.
010001	PD1	Wake by an enabled or non-enabled interrupt	
011010	PD2†	Wake by a device reset	Output clock from PLL is halted, stopping the internal clock structure from switching and resulting in the entire chip being halted. All register and internal RAM contents are preserved. All functional I/O "freeze" in the last state when the PLL clock is turned off.
011100	PD3†	Wake by a device reset	Input clock to the PLL stops generating clocks. All register and internal RAM contents are preserved. All functional I/O "freeze" in the last state when the PLL clock is turned off. Following reset, the PLL needs time to re-lock, just as it does following power-up. Wake-up from PD3 takes longer than wake-up from PD2 because the PLL needs to be re-locked, just as it does following power-up.
All others	Reserved	—	—

† When entering PD2 and PD3, all functional I/O remains in the previous state. However, for peripherals which are asynchronous in nature or peripherals with an external clock source, output signals may transition in response to stimulus on the inputs. Under these conditions, peripherals will not operate according to specifications.

power-supply sequencing

TI DSPs do not require specific power sequencing between the core supply and the I/O supply. However, systems should be designed to ensure that neither supply is powered up for extended periods of time if the other supply is below the proper operating voltage.

system-level design considerations

System-level design considerations, such as bus contention, may require supply sequencing to be implemented. In this case, the core supply should be powered up at the same time as, or prior to (and powered down after), the I/O buffers. This is to ensure that the I/O buffers receive valid inputs from the core before the output buffers are powered up, thus, preventing bus contention with other chips on the board.

power-supply design considerations

For systems using the C6000™ DSP platform of devices, the core supply may be required to provide in excess of 2 A per DSP until the I/O supply is powered up. This extra current condition is a result of uninitialized logic within the DSP(s) and is corrected once the CPU sees an internal clock pulse. With the PLL enabled, as the I/O supply is powered on, a clock pulse is produced stopping the extra current draw from the supply. With the PLL disabled, as many as five external clock cycle pulses may be required to stop this extra current draw. A normal current state returns once the I/O power supply is turned on and the CPU sees a clock pulse. Decreasing the amount of time between the core supply power up and the I/O supply power up can minimize the effects of this current draw.

A dual-power supply with simultaneous sequencing, such as available with TPS563xx controllers or PT69xx plug-in power modules, can be used to eliminate the delay between core and I/O power up [see the *Using the TPS56300 to Power DSPs* application report (literature number SLVA088)]. A Schottky diode can also be used to tie the core rail to the I/O rail, effectively pulling up the I/O power supply to a level that can help initialize the logic within the DSP.

Core and I/O supply voltage regulators should be located close to the DSP (or DSP array) to minimize inductance and resistance in the power delivery path. Additionally, when designing for high-performance applications utilizing the C6000™ platform of DSPs, the PC board should include separate power planes for core, I/O, and ground, all bypassed with high-quality low-ESL/ESR capacitors.

IEEE 1149.1 JTAG compatibility statement

The TMS320C6211/C6211B DSP requires that both $\overline{\text{TRST}}$ and $\overline{\text{RESET}}$ resets be asserted upon power up to be properly initialized. While $\overline{\text{RESET}}$ initializes the DSP core, $\overline{\text{TRST}}$ initializes the DSP's emulation logic. Both resets are required for proper operation.

While both $\overline{\text{TRST}}$ and $\overline{\text{RESET}}$ need to be asserted upon power up, only $\overline{\text{RESET}}$ needs to be released for the DSP to boot properly. $\overline{\text{TRST}}$ may be asserted indefinitely for normal operation, keeping the JTAG port interface and DSP's emulation logic in the reset state.

$\overline{\text{TRST}}$ only needs to be released when it is necessary to use a JTAG controller to debug the DSP or exercise the DSP's boundary scan functionality.

For maximum reliability, the TMS320C6211/C6211B DSP includes an internal pulldown (IPD) on the $\overline{\text{TRST}}$ pin to ensure that $\overline{\text{TRST}}$ will always be asserted upon power up and the DSP's internal emulation logic will always be properly initialized.

JTAG controllers from Texas Instruments actively drive $\overline{\text{TRST}}$ high. However, some third-party JTAG controllers may not drive $\overline{\text{TRST}}$ high but expect the use of an external pullup resistor on $\overline{\text{TRST}}$.

When using this type of JTAG controller, assert $\overline{\text{TRST}}$ to initialize the DSP after powerup and externally drive $\overline{\text{TRST}}$ high before attempting any emulation or boundary scan operations. Following the release of $\overline{\text{RESET}}$, the low-to-high transition of $\overline{\text{TRST}}$ must be "seen" to latch the state of EMU1 and EMU0. The EMU[1:0] pins configure the device for either Boundary Scan mode or Emulation mode. For more detailed information, see the terminal functions section of this data sheet.

EMIF device speed

TI recommends utilizing the input/output buffer information specification (IBIS) models to analyze all AC timings. To properly use IBIS models to attain accurate timing analysis for a given system, see the *Using IBIS Models for Timing Analysis* application report (literature number SPRA839).

bootmode

The C62x™ device resets using the active-low signal $\overline{\text{RESET}}$ signal (for the C6211/C6211B device, the $\overline{\text{RESET}}$ signal is the same as the internal reset signal). While $\overline{\text{RESET}}$ is low, the internal reset is also asserted and the device is held in reset and is initialized to the prescribed reset state. Refer to reset timing for reset timing characteristics and states of device pins during reset. The release of the internal reset signal (see the Reset Phase 3 discussion in the Reset Timing section of this data sheet) starts the processor running with the prescribed device configuration and boot mode.

The C6211/C6211B has three types of boot modes:

- Host boot

  If host boot is selected, upon release of internal reset, the CPU is internally “stalled” while the remainder of the device is released. During this period, an external host can initialize the CPU’s memory space as necessary through the host interface, including internal configuration registers, such as those that control the EMIF or other peripherals. Once the host is finished with all necessary initialization, it must set the DSPINT bit in the HPIC register to complete the boot process. This transition causes the boot configuration logic to bring the CPU out of the “stalled” state. The CPU then begins execution from address 0. The DSPINT condition is not latched by the CPU, because it occurs while the CPU is still internally “stalled”. Also, DSPINT brings the CPU out of the “stalled” state only if the host boot process is selected. All memory may be written to and read by the host. This allows for the host to verify what it sends to the DSP if required. After the CPU is out of the “stalled” state, the CPU needs to clear the DSPINT, otherwise, no more DSPINTs can be received.

- Emulation boot

  Emulation boot mode is a variation of host boot. In this mode, it is not necessary for a host to load code or to set DSPINT to release the CPU from the “stalled” state. Instead, the emulator will set DSPINT if it has not been previously set so that the CPU can begin executing code from address 0. Prior to beginning execution, the emulator sets a breakpoint at address 0. This prevents the execution of invalid code by halting the CPU prior to executing the first instruction. Emulation boot is a good tool in the debug phase of development.

- EMIF boot (using default ROM timings)

  Upon the release of internal reset, the 1K-Byte ROM code located in the beginning of $\overline{\text{CE1}}$ is copied to address 0 by the EDMA using the default ROM timings, while the CPU is internally “stalled”. The data should be stored in the endian format that the system is using. The boot process also lets you choose the width of the ROM. In this case, the EMIF automatically assembles consecutive 8-bit bytes or 16-bit half-words to form the 32-bit instruction words to be copied. The transfer is automatically done by the EDMA as a single-frame block transfer from the ROM to address 0. After completion of the block transfer, the CPU is released from the “stalled” state and start running from address 0.

absolute maximum ratings over operating case temperature range (unless otherwise noted)†

Supply voltage range, CV_{DD} (see Note 1) . . . . . − 0.3 V to 2.3 V
Supply voltage range, DV_{DD} (see Note 1) . . . . . −0.3 V to 4 V
Input voltage range . . . . . −0.3 V to 4 V
Output voltage range . . . . . −0.3 V to 4 V
Operating case temperature ranges, T_C:(default) . . . . . 0°C to 90°C
(A version) [C6211BGFNA only] . . . . . −40°C to105°C
Storage temperature range, T_{stg} . . . . . −65°C to 150°C

† Stresses beyond those listed under “absolute maximum ratings” may cause permanent damage to the device. These are stress ratings only, and functional operation of the device at these or any other conditions beyond those indicated under “recommended operating conditions” is not implied. Exposure to absolute-maximum-rated conditions for extended periods may affect device reliability.
NOTE 1: All voltage values are with respect to V_{SS}.

recommended operating conditions

			MIN	NOM	MAX	UNIT
CV_{DD}	Supply voltage, Core		1.71	1.8	1.89	V
DV_{DD}	Supply voltage, I/O		3.14	3.3	3.46	V
V_{SS}	Supply ground		0	0	0	V
V_{IH}	High-level input voltage		2			V
V_{IL}	Low-level input voltage				0.8	V
I_{OH}	High-level output current	All signals except CLKOUT1, CLKOUT2, and ECLKOUT			−4	mA
		CLKOUT1, CLKOUT2, and ECLKOUT			−8	mA
I_{OL}	Low-level output current	All signals except CLKOUT1, CLKOUT2, and ECLKOUT			4	mA
		CLKOUT1, CLKOUT2, and ECLKOUT			8	mA
T_C	Operating case temperature	Default	0		90	°C
		A version (C6211BGFNA only)	−40		105	°C

electrical characteristics over recommended ranges of supply voltage and operating case temperature (unless otherwise noted)

PARAMETER		TEST CONDITIONS‡	MIN	TYP	MAX	UNIT
V_{OH}	High-level output voltage	DV_{DD} = MIN, I_{OH} = MAX	2.4			V
V_{OL}	Low-level output voltage	DV_{DD} = MIN, I_{OL} = MAX			0.4	V
I_I	Input current	$V_I = V_{SS}$ to DV_{DD}			±150	uA
I_{OZ}	Off-state output current	$V_O = DV_{DD}$ or 0 V			±10	uA
I_{DD2V}	Supply current, CPU + CPU memory access§	C6211, CV_{DD} = NOM, CPU clock = 150 MHz		270		mA
		C6211B, CV_{DD} = NOM, CPU clock = 150 MHz		270		mA
I_{DD2V}	Supply current, peripherals§	C6211, CV_{DD} = NOM, CPU clock = 150 MHz		220		mA
		C6211B, CV_{DD} = NOM, CPU clock = 150 MHz		220		mA
I_{DD3V}	Supply current, I/O pins§	C6211, DV_{DD} = NOM, CPU clock = 150 MHz		60		mA
		C6211B, DV_{DD} = NOM, CPU clock = 150 MHz		60		mA
C_i	Input capacitance				7	pF
C_o	Output capacitance				7	pF

‡ For test conditions shown as MIN, MAX, or NOM, use the appropriate value specified in the recommended operating conditions table.
§ Measured with average activity (50% high/50% low power). For more details on CPU, peripheral, and I/O activity, refer to the *TMS320C62x/C67x Power Consumption Summary* application report (literature number SPRA486).

PARAMETER MEASUREMENT INFORMATION

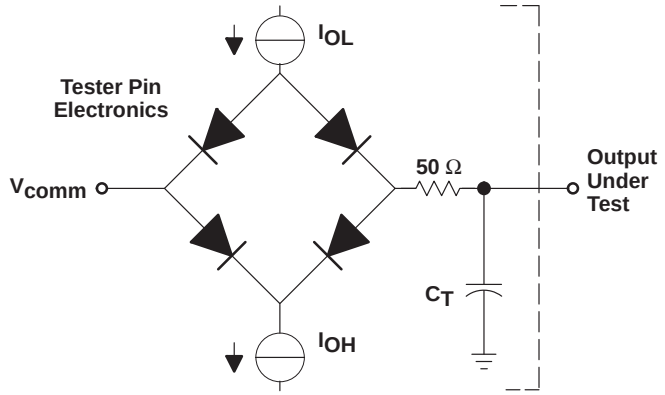

Where: I_{OL} = 2 mA
I_{OH} = 2 mA
V_{comm} = 0.8 V
C_T = 10−15-pF typical load-circuit capacitance

Figure 9. Test Load Circuit for AC Timing Measurements

signal transition levels

All input and output timing parameters are referenced to 1.5 V for both “0” and “1” logic levels.

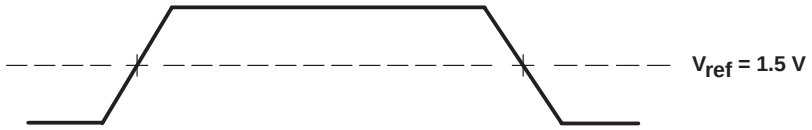

Figure 10. Input and Output Voltage Reference Levels for ac Timing Measurements

All rise and fall transition timing parameters are referenced to V_{IL} MAX and V_{IH} MIN for input clocks, and V_{OL} MAX and V_{OH} MIN for output clocks.

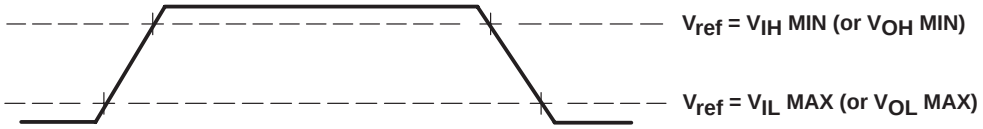

Figure 11. Rise and Fall Transition Time Voltage Reference Levels

PARAMETER MEASUREMENT INFORMATION (CONTINUED)

timing parameters and board routing analysis

The timing parameter values specified in this data sheet do *not* include delays by board routings. As a good board design practice, such delays must *always* be taken into account. Timing values may be adjusted by increasing/decreasing such delays. TI recommends utilizing the available I/O buffer information specification (IBIS) models to analyze the timing characteristics correctly. If needed, external logic hardware such as buffers may be used to compensate any timing differences. For example:

- In typical boards with the C6211B commercial temperature device, the routing delay improves the external memory's ability to meet the DSP's EMIF data input hold time requirement [$t_{h(EKOH-EDV)}$].
- In some boards with the C6211BGFNA extended temperature device, the routing delay improves the external memory's ability to meet the DSP's EMIF data input hold time requirement [$t_{h(EKOH-EDV)}$]. In addition, it may be necessary to add an extra delay to the input clock of the external memory to robustly meet the DSP's data input hold time requirement. If the extra delay approach is used, memory bus frequency adjustments may be needed to ensure the DPS's input setup time requirement [$t_{su(EDV-EKOH)}$] is still maintained.

For inputs, timing is most impacted by the round-trip propagation delay from the DSP to the external device and from the external device to the DSP. This round-trip delay tends to negatively impact the input setup time margin, but also tends to improve the input hold time margins (see Table 20 and Figure 12).

Figure 12 represents a general transfer between the DSP and an external device. The figure also represents board route delays and how they are perceived by the DSP and the external device.

PARAMETER MEASUREMENT INFORMATION (CONTINUED)

Table 20. IBIS Timing Parameters Example (see Figure 12)

NO.	DESCRIPTION
1	Clock route delay
2	Minimum DSP hold time
3	Minimum DSP setup time
4	External device hold time requirement
5	External device setup time requirement
6	Control signal route delay
7	External device hold time
8	External device access time
9	DSP hold time requirement
10	DSP setup time requirement
11	Data route delay

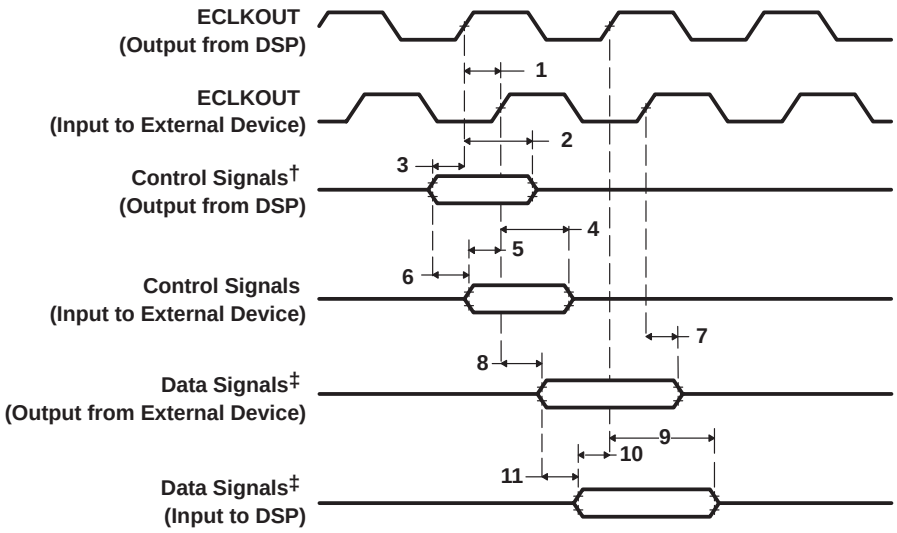

† Control signals include data for Writes.
‡ Data signals are generated during Reads from an external device.

Figure 12. IBIS Input/Output Timings

INPUT AND OUTPUT CLOCKS

timing requirements for CLKIN†‡ (see Figure 13)

NO.			−150				−167				UNIT
			CLKMODE = x4		CLKMODE = x1		CLKMODE = x4		CLKMODE = x1		
			MIN	MAX	MIN	MAX	MIN	MAX	MIN	MAX	
1	$t_{c(CLKIN)}$	Cycle time, CLKIN	26.7		6.7		24		6		ns
2	$t_{w(CLKINH)}$	Pulse duration, CLKIN high	0.4C		0.45C		0.4C		0.45C		ns
3	$t_{w(CLKINL)}$	Pulse duration, CLKIN low	0.4C		0.45C		0.4C		0.45C		ns
4	$t_{t(CLKIN)}$	Transition time, CLKIN		5		1		5		1	ns

† The reference points for the rise and fall transitions are measured at V_{IL} MAX and V_{IH} MIN.
‡ C = CLKIN cycle time in ns. For example, when CLKIN frequency is 40 MHz, use C = 25 ns.

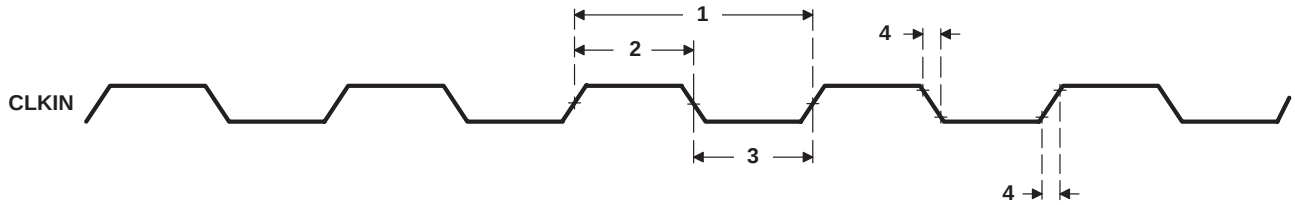

Figure 13. CLKIN Timings

INPUT AND OUTPUT CLOCKS (CONTINUED)

switching characteristics over recommended operating conditions for CLKOUT1[†‡§] (see Figure 14)

NO.	PARAMETER		−150 −167				UNIT
			CLKMODE = x4		CLKMODE = x1		
			MIN	MAX	MIN	MAX	
1	$t_{c(CKO1)}$	Cycle time, CLKOUT1	P − 0.7	P + 0.7	P − 0.7	P + 0.7	ns
2	$t_{w(CKO1H)}$	Pulse duration, CLKOUT1 high	(P/2) − 0.7	(P/2) + 0.7	PH − 0.7	PH + 0.7	ns
3	$t_{w(CKO1L)}$	Pulse duration, CLKOUT1 low	(P/2) − 0.7	(P/2) + 0.7	PL − 0.7	PL + 0.7	ns
4	$t_{t(CKO1)}$	Transition time, CLKOUT1		2		2	ns

† The reference points for the rise and fall transitions are measured at V_{OL} MAX and V_{OH} MIN.
‡ P = 1/CPU clock frequency in nanoseconds (ns)
§ PH is the high period of CLKIN in ns and PL is the low period of CLKIN in ns.

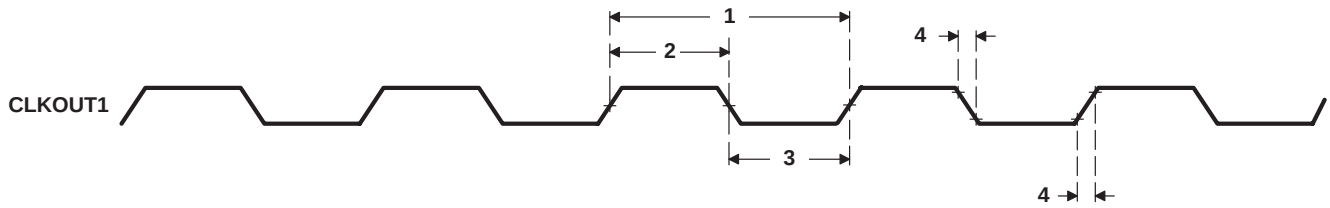

Figure 14. CLKOUT1 Timings

switching characteristics over recommended operating conditions for CLKOUT2[†‡] (see Figure 15)

NO.	PARAMETER		−150 −167		UNIT
			MIN	MAX	
1	$t_{c(CKO2)}$	Cycle time, CLKOUT2	2P − 0.7	2P + 0.7	ns
2	$t_{w(CKO2H)}$	Pulse duration, CLKOUT2 high	P − 0.7	P + 0.7	ns
3	$t_{w(CKO2L)}$	Pulse duration, CLKOUT2 low	P − 0.7	P + 0.7	ns
4	$t_{t(CKO2)}$	Transition time, CLKOUT2		2	ns

† The reference points for the rise and fall transitions are measured at V_{OL} MAX and V_{OH} MIN.
‡ P = 1/CPU clock frequency in ns

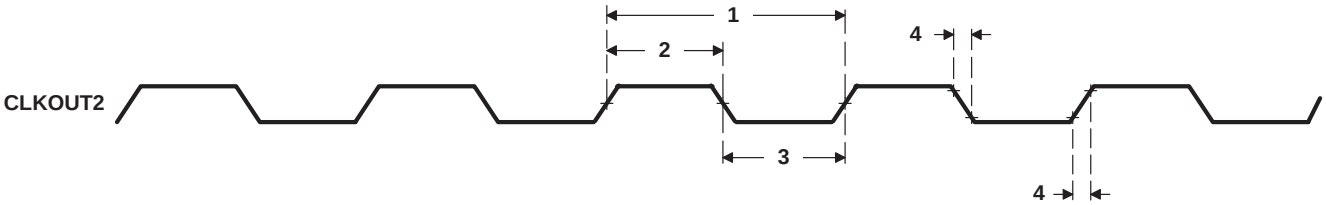

Figure 15. CLKOUT2 Timings

INPUT AND OUTPUT CLOCKS (CONTINUED)

timing requirements for ECLKIN† (see Figure 16)

NO.			−150 −167 MIN	−150 −167 MAX	UNIT
1	$t_{c(EKI)}$	Cycle time, ECLKIN	10		ns
2	$t_{w(EKIH)}$	Pulse duration, ECLKIN high	4.5		ns
3	$t_{w(EKIL)}$	Pulse duration, ECLKIN low	4.5		ns
4	$t_{t(EKI)}$	Transition time, ECLKIN		2.2	ns

† The reference points for the rise and fall transitions are measured at V_{IL} MAX and V_{IH} MIN.

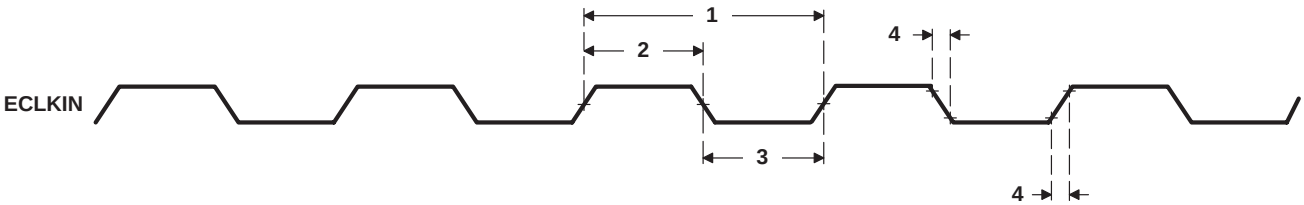

Figure 16. ECLKIN Timings

switching characteristics over recommended operating conditions for ECLKOUT‡§¶ (see Figure 17)

NO.	PARAMETER		−150 −167 MIN	−150 −167 MAX	UNIT
1	$t_{c(EKO)}$	Cycle time, ECLKOUT	E − 0.7	E + 0.7	ns
2	$t_{w(EKOH)}$	Pulse duration, ECLKOUT high	EH − 0.7	EH + 0.7	ns
3	$t_{w(EKOL)}$	Pulse duration, ECLKOUT low	EL − 0.7	EL + 0.7	ns
4	$t_{t(EKO)}$	Transition time, ECLKOUT		2	ns
5	$t_{d(EKIH-EKOH)}$	Delay time, ECLKIN high to ECLKOUT high	1	7	ns
6	$t_{d(EKIL-EKOL)}$	Delay time, ECLKIN low to ECLKOUT low	1	7	ns

‡ The reference points for the rise and fall transitions are measured at V_{OL} MAX and V_{OH} MIN.
§ E = ECLKIN period in ns
¶ EH is the high period of ECLKIN in ns and EL is the low period of ECLKIN in ns.

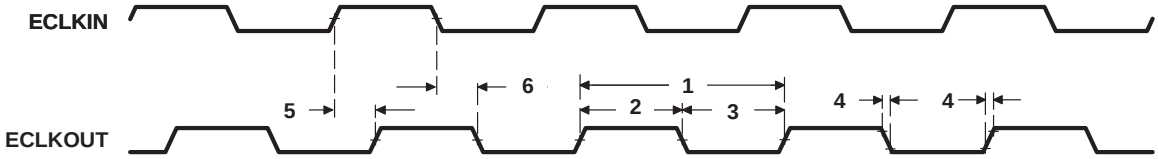

Figure 17. ECLKOUT Timings

ASYNCHRONOUS MEMORY TIMING

timing requirements for asynchronous memory cycles†‡§ (see Figure 18−Figure 19)

NO.			C6211−150 C6211−167		C6211B−150 C6211B−167 C6211BGFNA−150		UNIT
			MIN	MAX	MIN	MAX	
3	$t_{su(EDV-AREH)}$	Setup time, EDx valid before $\overline{ARE}$ high	9		9		ns
4	$t_{h(AREH-EDV)}$	Hold time, EDx valid after $\overline{ARE}$ high	1		2		ns
6	$t_{su(ARDY-EKOH)}$	Setup time, ARDY valid before ECLKOUT high	3		3		ns
7	$t_{h(EKOH-ARDY)}$	Hold time, ARDY valid after ECLKOUT high	1		2		ns

† To ensure data setup time, simply program the strobe width wide enough. ARDY is internally synchronized. The ARDY signal is recognized in the cycle for which the setup and hold time is met. To use ARDY as an asynchronous input, the pulse width of the ARDY signal should be wide enough (e.g., pulse width = 2E) to ensure setup and hold time is met.
‡ RS = Read setup, RST = Read strobe, RH = Read hold, WS = Write setup, WST = Write strobe, WH = Write hold. These parameters are programmed via the EMIF CE space control registers.
§ E = ECLKOUT period in ns

switching characteristics over recommended operating conditions for asynchronous memory cycles for C6211 and C6211B‡§¶ (see Figure 18−Figure 19)

NO.	PARAMETER		C6211−150 C6211−167		C6211B−150 C6211B−167		UNIT
			MIN	MAX	MIN	MAX	
1	$t_{osu(SELV-AREL)}$	Output setup time, select signals valid to $\overline{ARE}$ low	RS * E − 3		RS * E − 3		ns
2	$t_{oh(AREH-SELIV)}$	Output hold time, $\overline{ARE}$ high to select signals invalid	RH * E − 3		RH * E − 3		ns
5	$t_{d(EKOH-AREV)}$	Delay time, ECLKOUT high to $\overline{ARE}$ vaild	1.5	8	1.5	8	ns
8	$t_{osu(SELV-AWEL)}$	Output setup time, select signals valid to $\overline{AWE}$ low	WS * E − 3		WS * E − 3		ns
9	$t_{oh(AWEH-SELIV)}$	Output hold time, $\overline{AWE}$ high to select signals invalid	WH * E − 3		WH * E − 3		ns
10	$t_{d(EKOH-AWEV)}$	Delay time, ECLKOUT high to $\overline{AWE}$ vaild	1.5	8	1.2	8	ns

‡ RS = Read setup, RST = Read strobe, RH = Read hold, WS = Write setup, WST = Write strobe, WH = Write hold. These parameters are programmed via the EMIF CE space control registers.
§ E = ECLKOUT period in ns
¶ Select signals include: $\overline{CEx}$, $\overline{BE[3:0]}$, EA[21:2], $\overline{AOE}$; and for writes, include ED[31:0].

switching characteristics over recommended operating conditions for asynchronous memory cycles for C6211BGFNA‡§¶ (see Figure 18−Figure 19)

NO.	PARAMETER		C6211BGFNA−150		UNIT
			MIN	MAX	
1	$t_{osu(SELV-AREL)}$	Output setup time, select signals valid to $\overline{ARE}$ low	RS * E − 3		ns
2	$t_{oh(AREH-SELIV)}$	Output hold time, $\overline{ARE}$ high to select signals invalid	RH * E − 3		ns
5	$t_{d(EKOH-AREV)}$	Delay time, ECLKOUT high to $\overline{ARE}$ vaild	1.5	8	ns
8	$t_{osu(SELV-AWEL)}$	Output setup time, select signals valid to $\overline{AWE}$ low	WS * E − 3		ns
9	$t_{oh(AWEH-SELIV)}$	Output hold time, $\overline{AWE}$ high to select signals invalid	WH * E − 3		ns
10	$t_{d(EKOH-AWEV)}$	Delay time, ECLKOUT high to $\overline{AWE}$ vaild	1	8	ns

‡ RS = Read setup, RST = Read strobe, RH = Read hold, WS = Write setup, WST = Write strobe, WH = Write hold. These parameters are programmed via the EMIF CE space control registers.
§ E = ECLKOUT period in ns
¶ Select signals include: $\overline{CEx}$, $\overline{BE[3:0]}$, EA[21:2], $\overline{AOE}$; and for writes, include ED[31:0].

ASYNCHRONOUS MEMORY TIMING (CONTINUED)

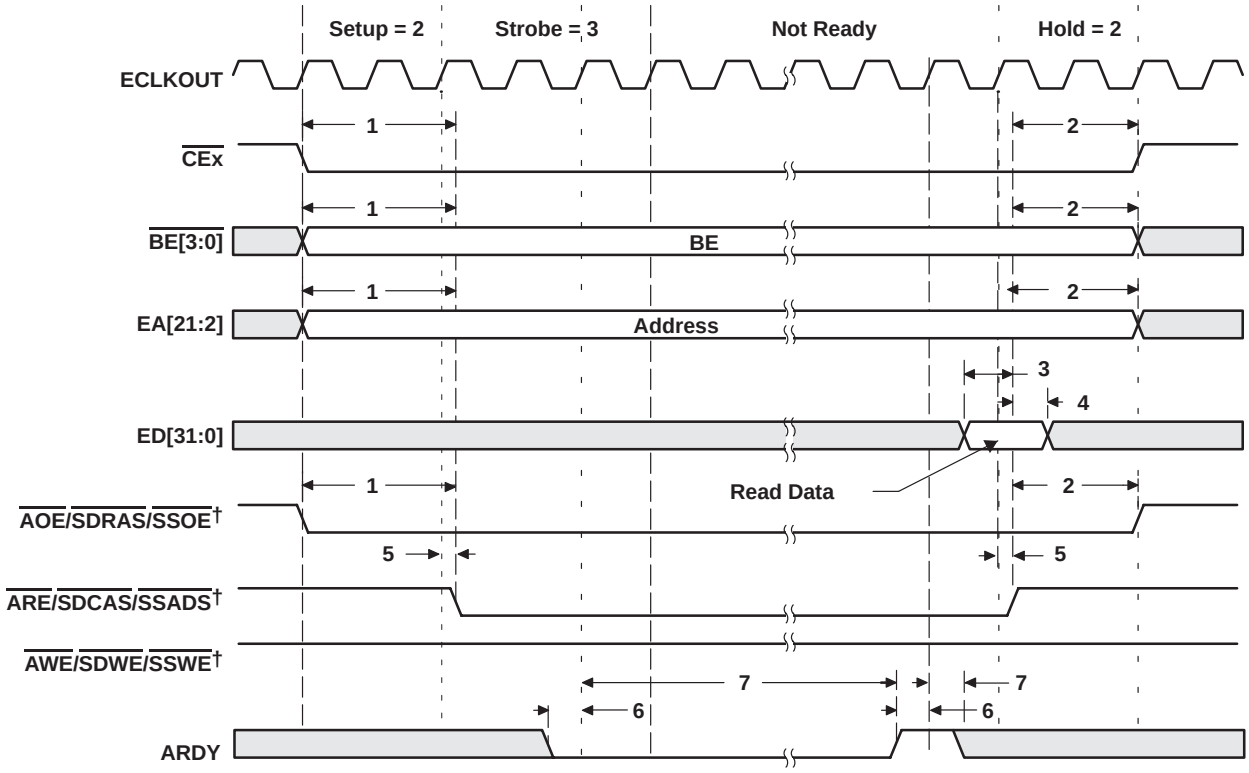

† AOE/SDRAS/SSOE, ARE/SDCAS/SSADS, and AWE/SDWE/SSWE operate as AOE (identified under select signals), ARE, and AWE, respectively, during asynchronous memory accesses.

Figure 18. Asynchronous Memory Read Timing

ASYNCHRONOUS MEMORY TIMING (CONTINUED)

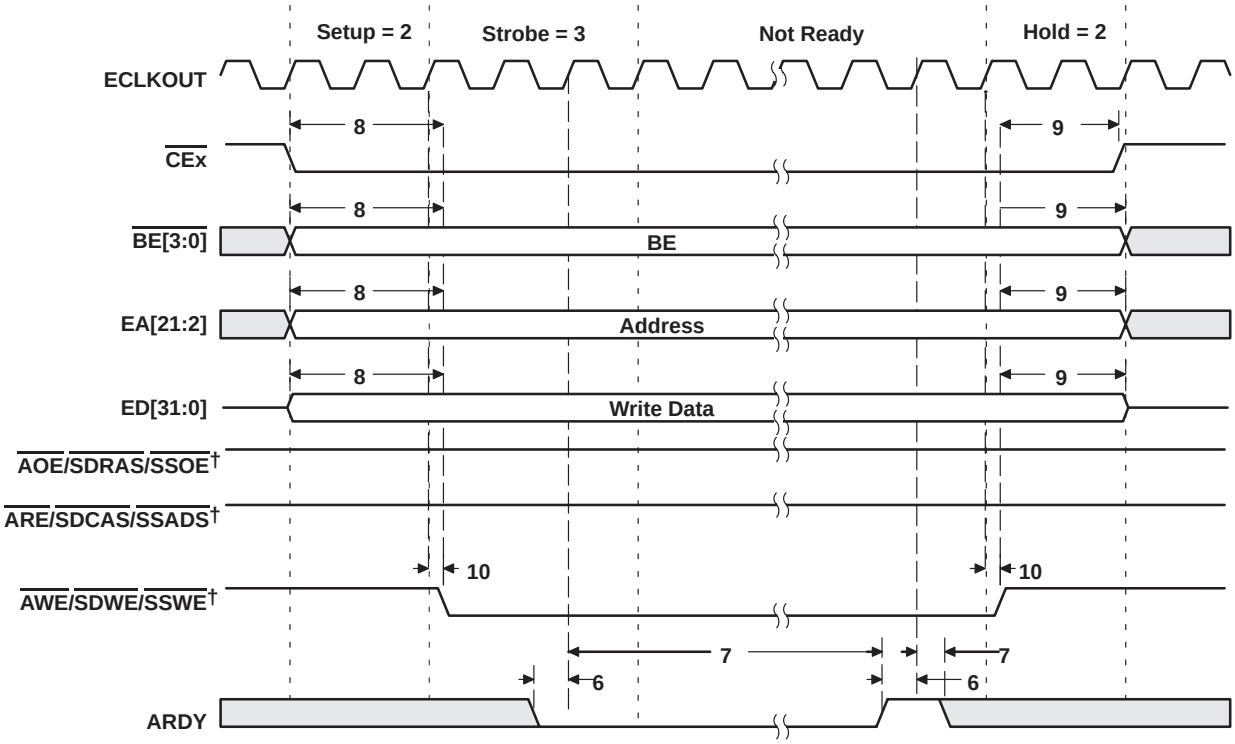

† AOE/SDRAS/SSOE, ARE/SDCAS/SSADS, and AWE/SDWE/SSWE operate as AOE (identified under select signals), ARE, and AWE, respectively, during asynchronous memory accesses.

Figure 19. Asynchronous Memory Write Timing

SYNCHRONOUS-BURST MEMORY TIMING

timing requirements for synchronous-burst SRAM cycles† (see Figure 20)

NO.			C6211−150 C6211−167		C6211BGFNA−150		C6211B−150 C6211B−167		UNIT
			MIN	MAX	MIN	MAX	MIN	MAX	
6	$t_{su(EDV-EKOH)}$	Setup time, read EDx valid before ECLKOUT high	2.5		2.5		2.5		ns
7	$t_{h(EKOH-EDV)}$	Hold time, read EDx valid after ECLKOUT high	1		2.5		2		ns

† The C6211/C6211B SBSRAM interface takes advantage of the internal burst counter in the SBSRAM. Accesses default to incrementing 4-word bursts, but random bursts and decrementing bursts are done by interrupting bursts in progress. All burst types can sustain continuous data flow.

switching characteristics over recommended operating conditions for synchronous-burst SRAM cycles†‡ (see Figure 20 and Figure 21)

NO.	PARAMETER		C6211−150 C6211−167		C6211BGFNA−150		C6211B−150 C6211B−167		UNIT
			MIN	MAX	MIN	MAX	MIN	MAX	
1	$t_{d(EKOH-CEV)}$	Delay time, ECLKOUT high to $\overline{CEx}$ valid	1.5	6.5	1	6.5	1.2	6.5	ns
2	$t_{d(EKOH-BEV)}$	Delay time, ECLKOUT high to $\overline{BEx}$ valid		6.5		6.5		6.5	ns
3	$t_{d(EKOH-BEIV)}$	Delay time, ECLKOUT high to $\overline{BEx}$ invalid	1.5		1		1.2		ns
4	$t_{d(EKOH-EAV)}$	Delay time, ECLKOUT high to EAx valid		6.5		6.5		6.5	ns
5	$t_{d(EKOH-EAIV)}$	Delay time, ECLKOUT high to EAx invalid	1.5		1		1.2		ns
8	$t_{d(EKOH-ADSV)}$	Delay time, ECLKOUT high to $\overline{ARE}/\overline{SDCAS}/\overline{SSADS}$ valid	1.5	6.5	1	6.5	1.2	6.5	ns
9	$t_{d(EKOH-OEV)}$	Delay time, ECLKOUT high to $\overline{AOE}/\overline{SDRAS}/\overline{SSOE}$ valid	1.5	6.5	1	6.5	1.2	6.5	ns
10	$t_{d(EKOH-EDV)}$	Delay time, ECLKOUT high to $\overline{EDx}$ valid		7		7		7	ns
11	$t_{d(EKOH-EDIV)}$	Delay time, ECLKOUT high to $\overline{EDx}$ invalid	1.5		1		1.2		ns
12	$t_{d(EKOH-WEV)}$	Delay time, ECLKOUT high to $\overline{AWE}/\overline{SDWE}/\overline{SSWE}$ valid	1.5	6.5	1	6.5	1.2	6.5	ns

† The C6211/C6211B SBSRAM interface takes advantage of the internal burst counter in the SBSRAM. Accesses default to incrementing 4-word bursts, but random bursts and decrementing bursts are done by interrupting bursts in progress. All burst types can sustain continuous data flow.
‡ $\overline{ARE}/\overline{SDCAS}/\overline{SSADS}$, $\overline{AOE}/\overline{SDRAS}/\overline{SSOE}$, and $\overline{AWE}/\overline{SDWE}/\overline{SSWE}$ operate as $\overline{SSADS}$, $\overline{SSOE}$, and $\overline{SSWE}$, respectively, during SBSRAM accesses.

SYNCHRONOUS-BURST MEMORY TIMING (CONTINUED)

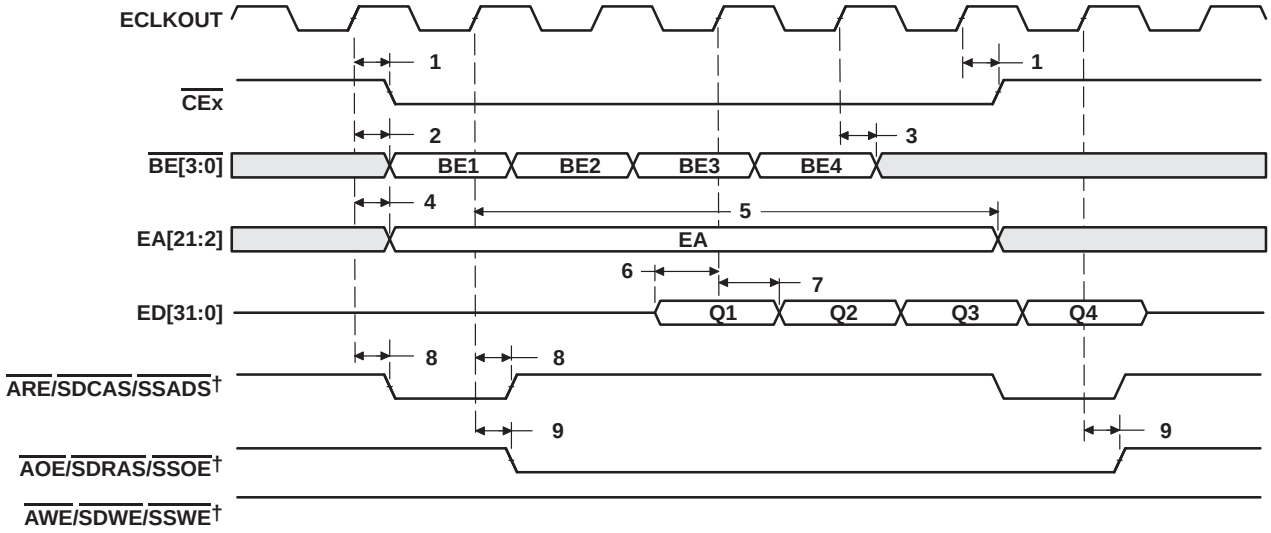

† $\overline{\text{ARE}}$/$\overline{\text{SDCAS}}$/$\overline{\text{SSADS}}$, $\overline{\text{AOE}}$/$\overline{\text{SDRAS}}$/$\overline{\text{SSOE}}$, and $\overline{\text{AWE}}$/$\overline{\text{SDWE}}$/$\overline{\text{SSWE}}$ operate as $\overline{\text{SSADS}}$, $\overline{\text{SSOE}}$, and $\overline{\text{SSWE}}$, respectively, during SBSRAM accesses.

Figure 20. SBSRAM Read Timing

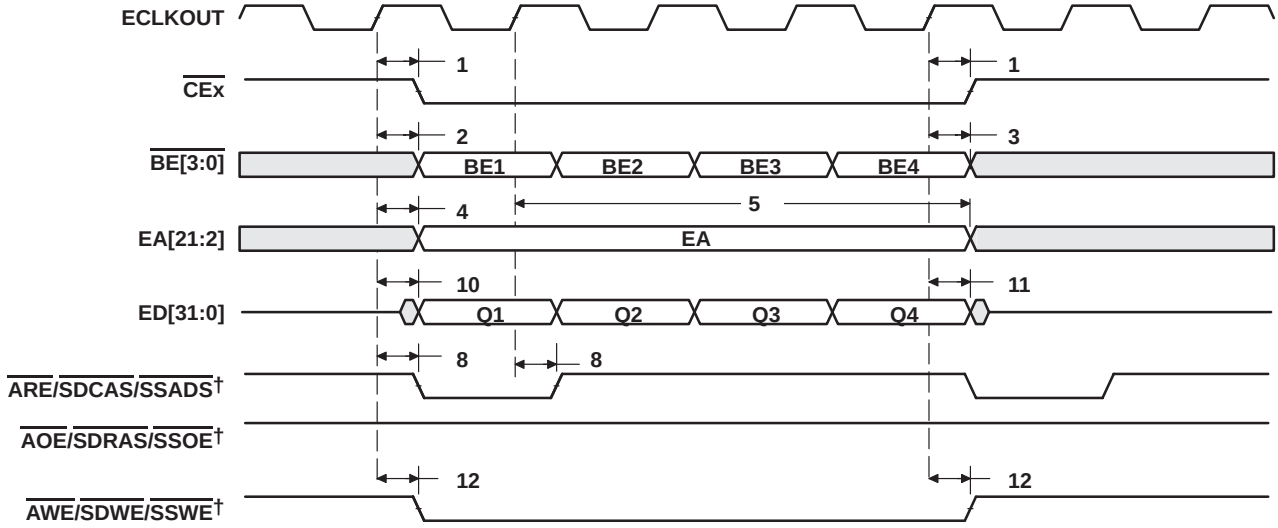

† $\overline{\text{ARE}}$/$\overline{\text{SDCAS}}$/$\overline{\text{SSADS}}$, $\overline{\text{AOE}}$/$\overline{\text{SDRAS}}$/$\overline{\text{SSOE}}$, and $\overline{\text{AWE}}$/$\overline{\text{SDWE}}$/$\overline{\text{SSWE}}$ operate as $\overline{\text{SSADS}}$, $\overline{\text{SSOE}}$, and $\overline{\text{SSWE}}$, respectively, during SBSRAM accesses.

Figure 21. SBSRAM Write Timing

SYNCHRONOUS DRAM TIMING

timing requirements for synchronous DRAM cycles† (see Figure 22)

NO.			C6211−150 C6211−167		C6211BGFNA−150		C6211B−150 C6211B−167		UNIT
			MIN	MAX	MIN	MAX	MIN	MAX	
6	$t_{su(EDV-EKOH)}$	Setup time, read EDx valid before ECLKOUT high	2.5		2.5		2.5		ns
7	$t_{h(EKOH-EDV)}$	Hold time, read EDx valid after ECLKOUT high	1		2.5		2		ns

† The C6211/C6211B SDRAM interface takes advantage of the internal burst counter in the SDRAM. Accesses default to incrementing 4-word bursts, but random bursts and decrementing bursts are done by interrupting bursts in progress. All burst types can sustain continuous data flow.

switching characteristics over recommended operating conditions for synchronous DRAM cycles†‡ (see Figure 22−Figure 28)

NO.	PARAMETER		C6211−150 C6211−167		C6211BGFNA−150		C6211B−150 C6211B−167		UNIT
			MIN	MAX	MIN	MAX	MIN	MAX	
1	$t_{d(EKOH-CEV)}$	Delay time, ECLKOUT high to $\overline{CEx}$ valid	1.5	6.5	1	6.5	1.2	6.5	ns
2	$t_{d(EKOH-BEV)}$	Delay time, ECLKOUT high to $\overline{BEx}$ valid		6.5		6.5		6.5	ns
3	$t_{d(EKOH-BEIV)}$	Delay time, ECLKOUT high to $\overline{BEx}$ invalid	1.5		1		1.2		ns
4	$t_{d(EKOH-EAV)}$	Delay time, ECLKOUT high to EAx valid		6.5		6.5		6.5	ns
5	$t_{d(EKOH-EAIV)}$	Delay time, ECLKOUT high to EAx invalid	1.5		1		1.2		ns
8	$t_{d(EKOH-CASV)}$	Delay time, ECLKOUT high to $\overline{ARE}/\overline{SDCAS}/\overline{SSADS}$ valid	1.5	6.5	1	6.5	1.2	6.5	ns
9	$t_{d(EKOH-EDV)}$	Delay time, ECLKOUT high to $\overline{EDx}$ valid		7		7		7	ns
10	$t_{d(EKOH-EDIV)}$	Delay time, ECLKOUT high to $\overline{EDx}$ invalid	1.5		1		1.2		ns
11	$t_{d(EKOH-WEV)}$	Delay time, ECLKOUT high to $\overline{AWE}/\overline{SDWE}/\overline{SSWE}$ valid	1.5	6.5	1	6.5	1.2	6.5	ns
12	$t_{d(EKOH-RAS)}$	Delay time, ECLKOUT high to $\overline{AOE}/\overline{SDRAS}/\overline{SSOE}$ valid	1.5	6.5	1	6.5	1.2	6.5	ns

† The C6211/C6211B SDRAM interface takes advantage of the internal burst counter in the SDRAM. Accesses default to incrementing 4-word bursts, but random bursts and decrementing bursts are done by interrupting bursts in progress. All burst types can sustain continuous data flow.
‡ $\overline{ARE}/\overline{SDCAS}/\overline{SSADS}$, $\overline{AWE}/\overline{SDWE}/\overline{SSWE}$, and $\overline{AOE}/\overline{SDRAS}/\overline{SSOE}$ operate as $\overline{SDCAS}$, $\overline{SDWE}$, and $\overline{SDRAS}$, respectively, during SDRAM accesses.

SYNCHRONOUS DRAM TIMING (CONTINUED)

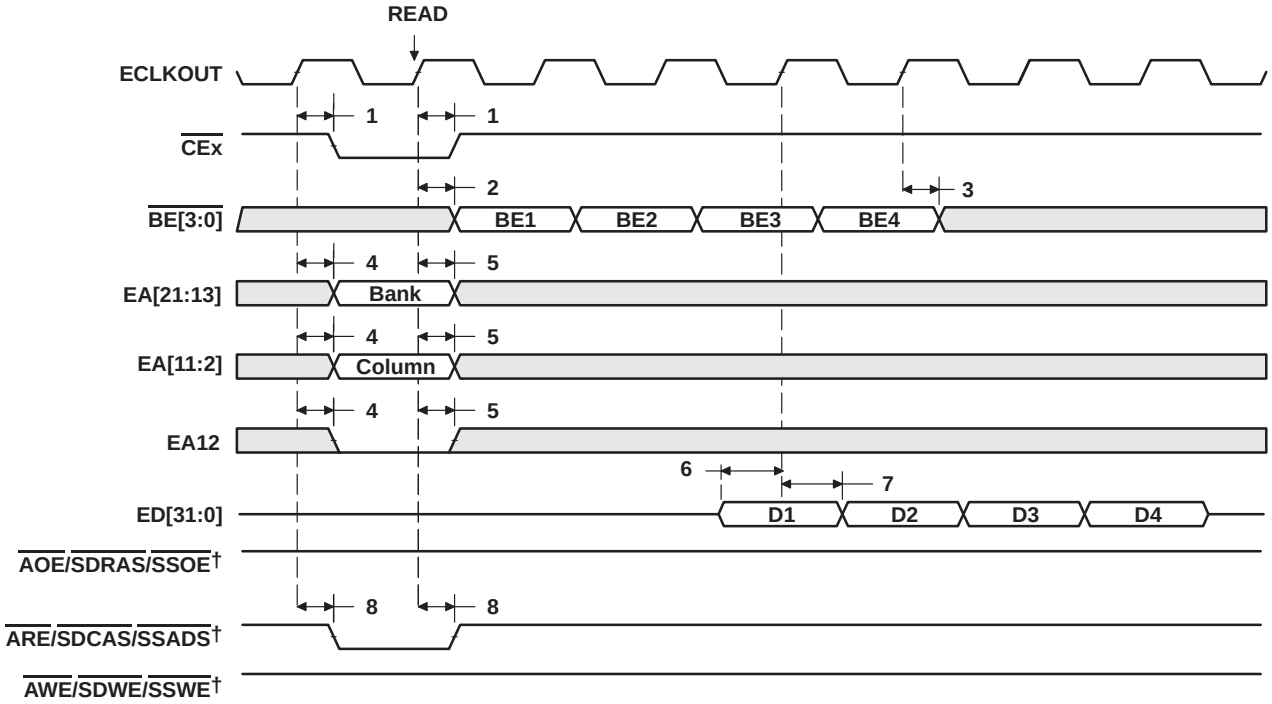

† ARE/SDCAS/SSADS, AWE/SDWE/SSWE, and AOE/SDRAS/SSOE operate as SDCAS, SDWE, and SDRAS, respectively, during SDRAM accesses.

Figure 22. SDRAM Read Command (CAS Latency 3)

SYNCHRONOUS DRAM TIMING (CONTINUED)

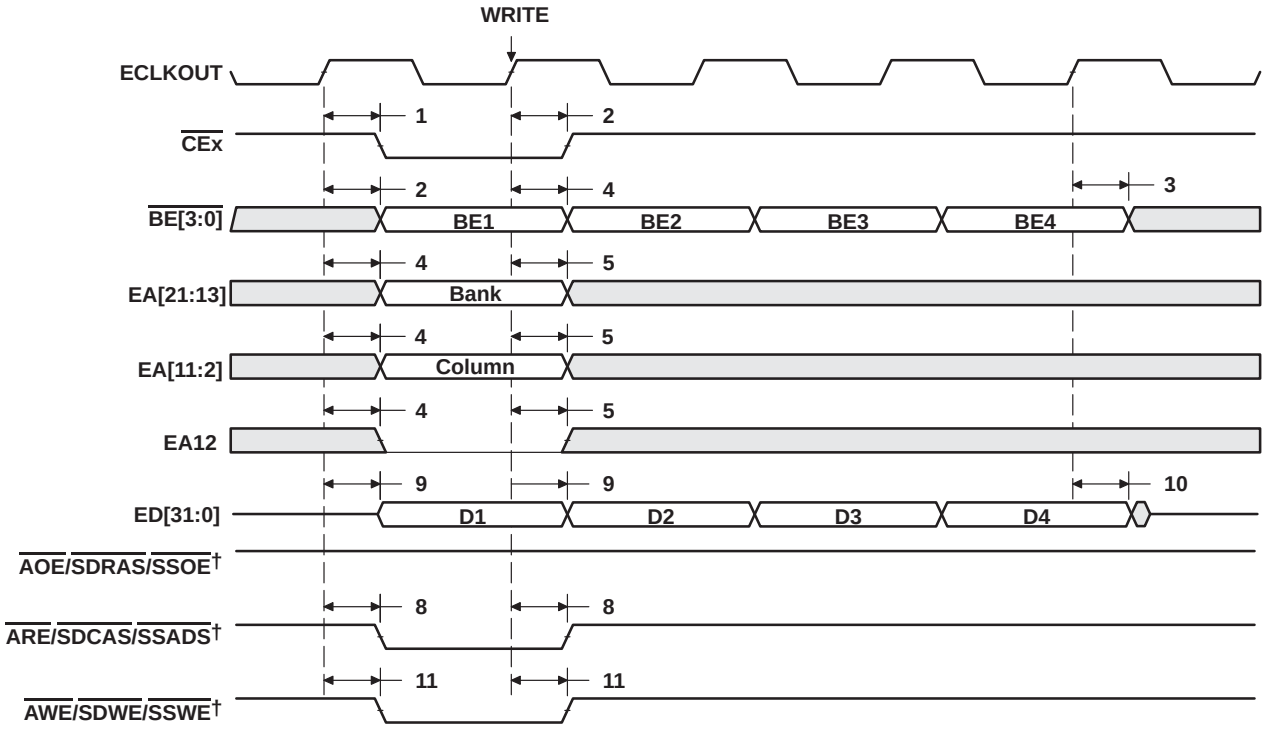

† ARE/SDCAS/SSADS, AWE/SDWE/SSWE, and AOE/SDRAS/SSOE operate as SDCAS, SDWE, and SDRAS, respectively, during SDRAM accesses.

Figure 23. SDRAM Write Command

SYNCHRONOUS DRAM TIMING (CONTINUED)

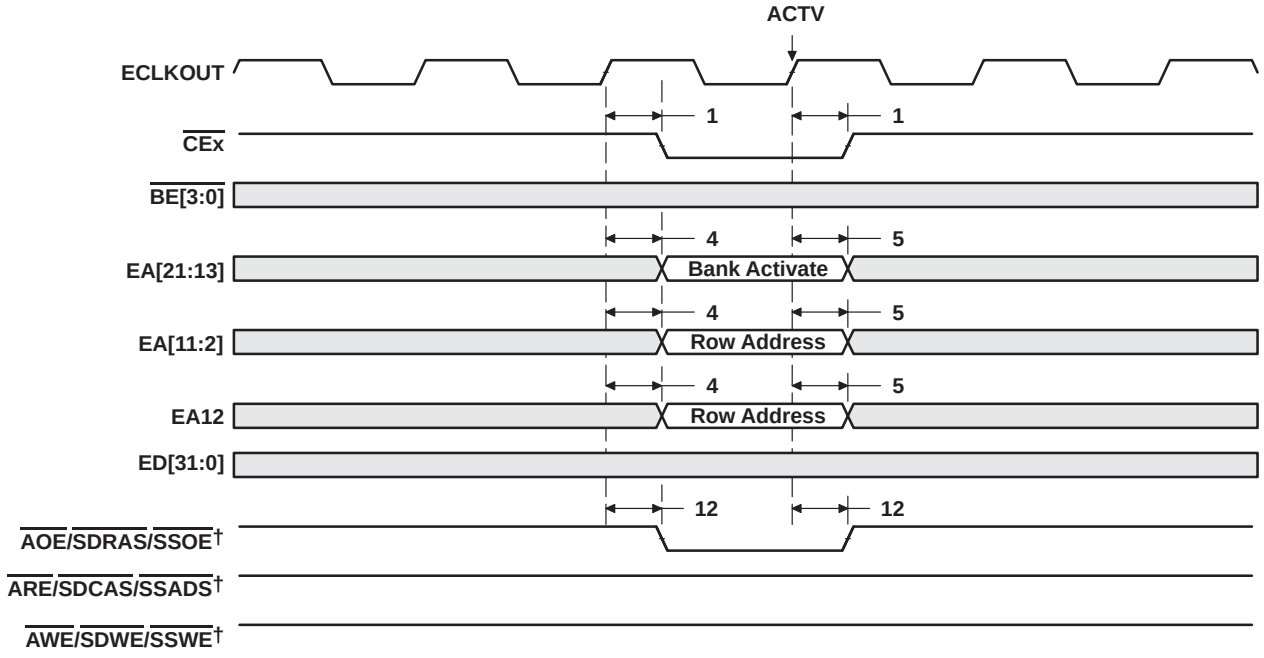

† ARE/SDCAS/SSADS, AWE/SDWE/SSWE, and AOE/SDRAS/SSOE operate as SDCAS, SDWE, and SDRAS, respectively, during SDRAM accesses.

Figure 24. SDRAM ACTV Command

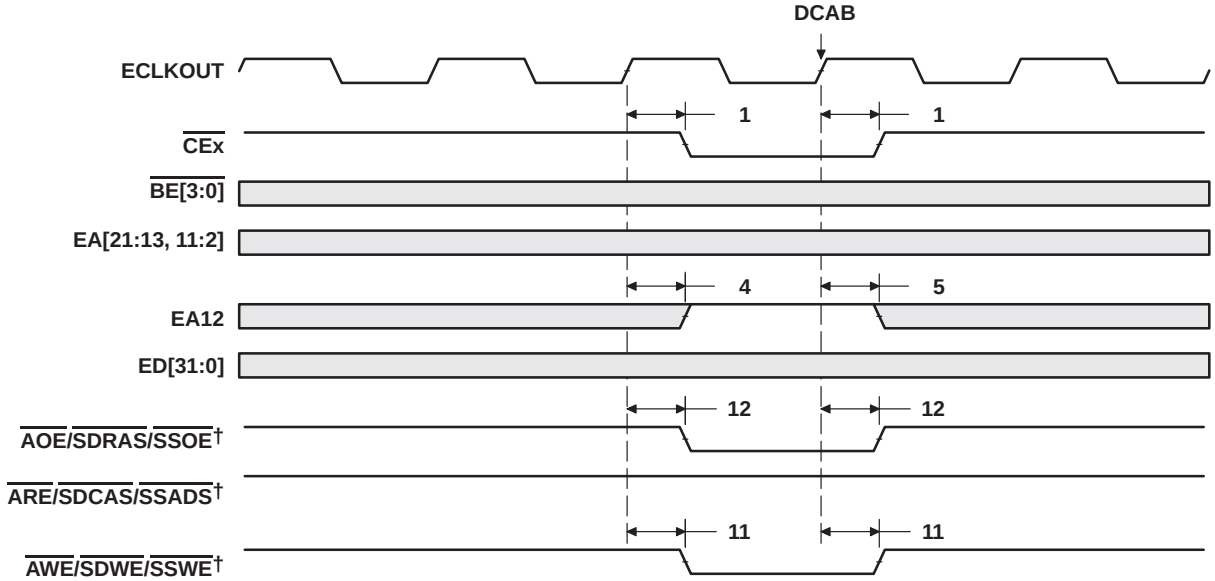

† ARE/SDCAS/SSADS, AWE/SDWE/SSWE, and AOE/SDRAS/SSOE operate as SDCAS, SDWE, and SDRAS, respectively, during SDRAM accesses.

Figure 25. SDRAM DCAB Command

SYNCHRONOUS DRAM TIMING (CONTINUED)

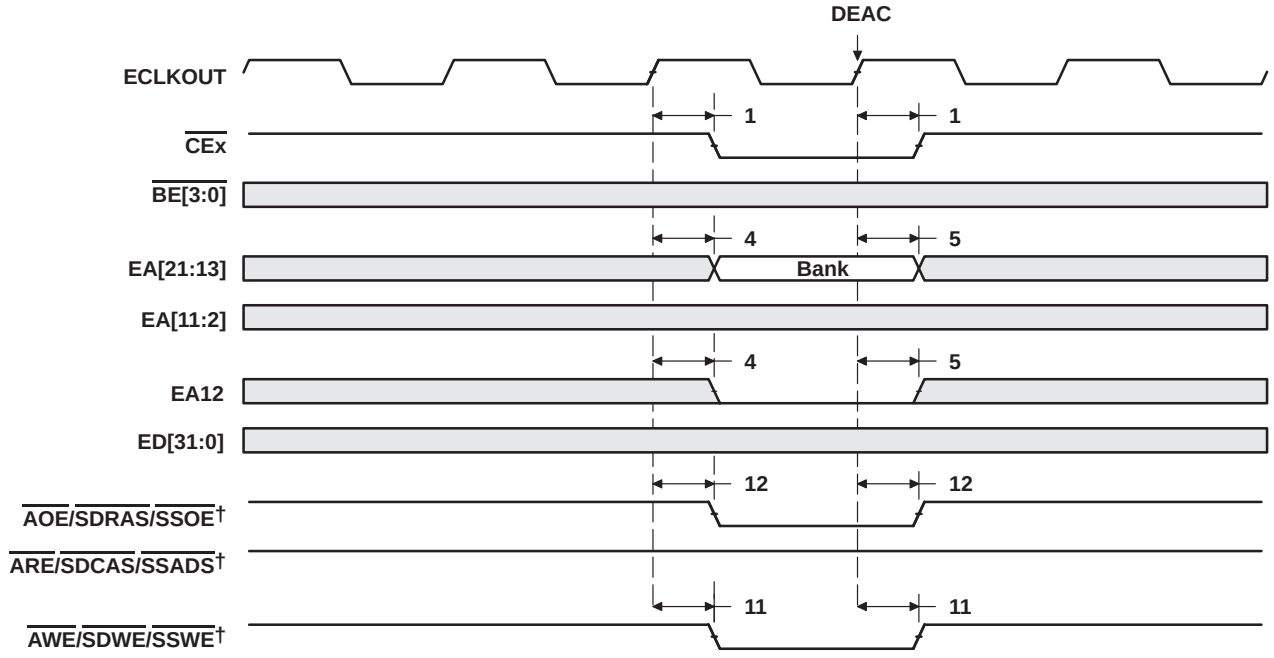

† ARE/SDCAS/SSADS, AWE/SDWE/SSWE, and AOE/SDRAS/SSOE operate as SDCAS, SDWE, and SDRAS, respectively, during SDRAM accesses.

Figure 26. SDRAM DEAC Command

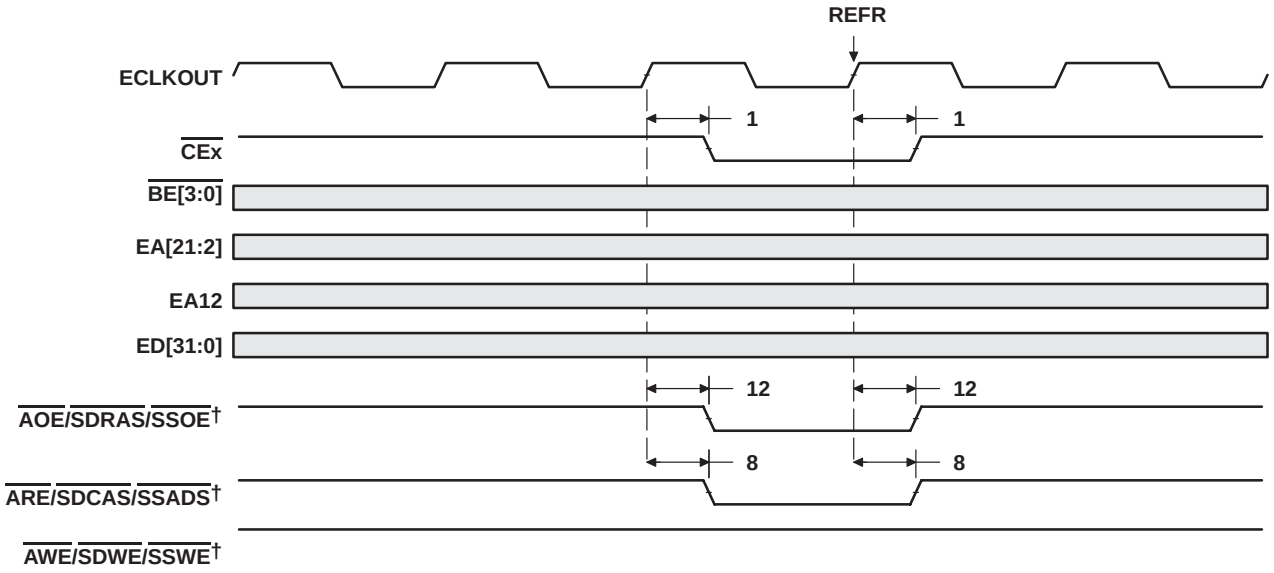

† ARE/SDCAS/SSADS, AWE/SDWE/SSWE, and AOE/SDRAS/SSOE operate as SDCAS, SDWE, and SDRAS, respectively, during SDRAM accesses.

Figure 27. SDRAM REFR Command

SYNCHRONOUS DRAM TIMING (CONTINUED)

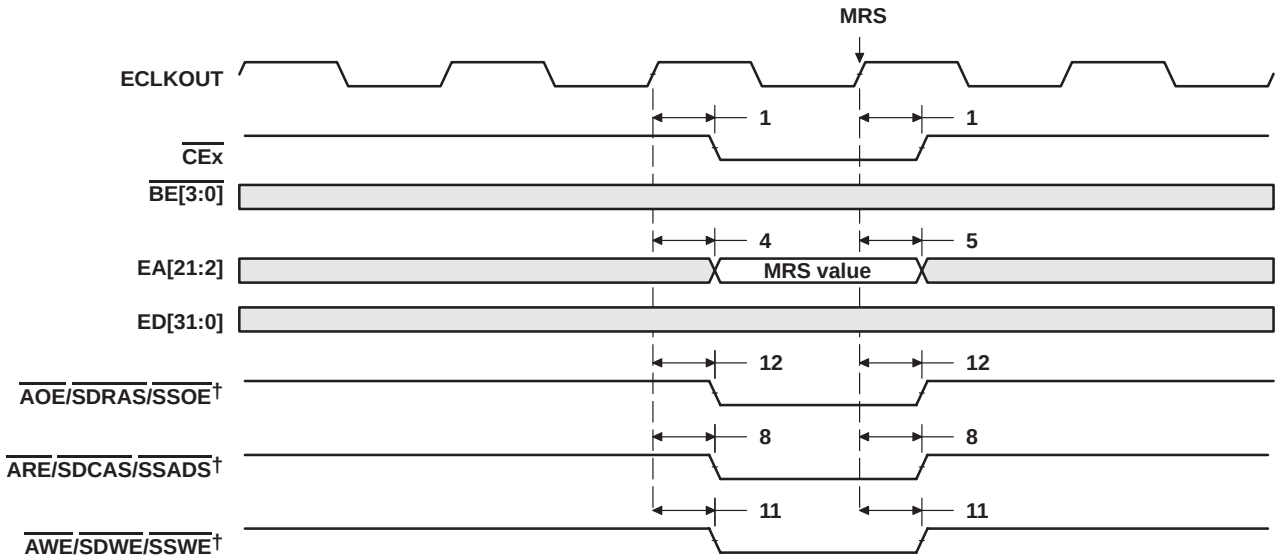

† ARE/SDCAS/SSADS, AWE/SDWE/SSWE, and AOE/SDRAS/SSOE operate as SDCAS, SDWE, and SDRAS, respectively, during SDRAM accesses.

Figure 28. SDRAM MRS Command

$\overline{\text{HOLD}}$/$\overline{\text{HOLDA}}$ TIMING

timing requirements for the $\overline{\text{HOLD}}$/$\overline{\text{HOLDA}}$ cycles† (see Figure 29)

NO.		−150 −167 MIN	−150 −167 MAX	UNIT
3	$t_{oh(HOLDAL-HOLDL)}$ Output hold time, $\overline{\text{HOLD}}$ low after $\overline{\text{HOLDA}}$ low	E		ns

† E = ECLKIN period in ns

switching characteristics over recommended operating conditions for the $\overline{\text{HOLD}}$/$\overline{\text{HOLDA}}$ cycles†‡ (see Figure 29)

NO.	PARAMETER	−150 −167 MIN	−150 −167 MAX	UNIT
1	$t_{d(HOLDL-EMHZ)}$ Delay time, $\overline{\text{HOLD}}$ low to EMIF Bus high impedance	2E	§	ns
2	$t_{d(EMHZ-HOLDAL)}$ Delay time, EMIF Bus high impedance to $\overline{\text{HOLDA}}$ low	0	2E	ns
4	$t_{d(HOLDH-EMLZ)}$ Delay time, $\overline{\text{HOLD}}$ high to EMIF Bus low impedance	2E	7E	ns
5	$t_{d(EMLZ-HOLDAH)}$ Delay time, EMIF Bus low impedance to $\overline{\text{HOLDA}}$ high	0	2E	ns

† E = ECLKIN period in ns
‡ EMIF Bus consists of $\overline{\text{CE}}$[3:0], $\overline{\text{BE}}$[3:0], ED[31:0], EA[21:2], $\overline{\text{ARE}}$/$\overline{\text{SDCAS}}$/$\overline{\text{SSADS}}$, $\overline{\text{AOE}}$/$\overline{\text{SDRAS}}$/$\overline{\text{SSOE}}$, and $\overline{\text{AWE}}$/$\overline{\text{SDWE}}$/$\overline{\text{SSWE}}$.
§ All pending EMIF transactions are allowed to complete before $\overline{\text{HOLDA}}$ is asserted. If no bus transactions are occurring, then the minimum delay time can be achieved. Also, bus hold can be indefinitely delayed by setting NOHOLD = 1.

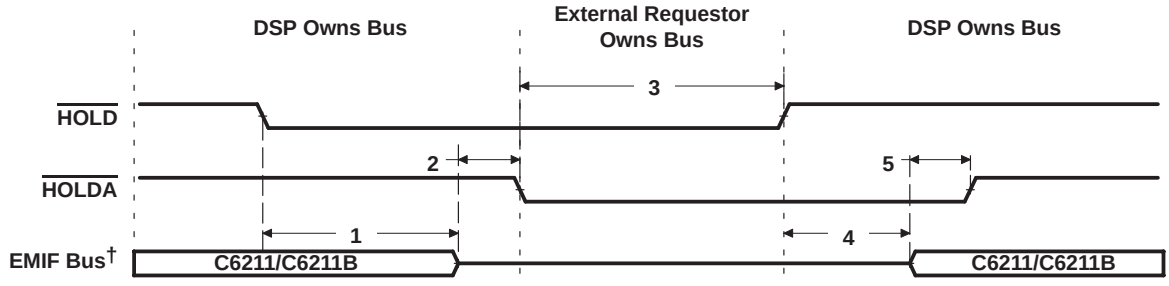

† EMIF Bus consists of $\overline{\text{CE}}$[3:0], $\overline{\text{BE}}$[3:0], ED[31:0], EA[21:2], $\overline{\text{ARE}}$/$\overline{\text{SDCAS}}$/$\overline{\text{SSADS}}$, $\overline{\text{AOE}}$/$\overline{\text{SDRAS}}$/$\overline{\text{SSOE}}$, and $\overline{\text{AWE}}$/$\overline{\text{SDWE}}$/$\overline{\text{SSWE}}$.

Figure 29. $\overline{\text{HOLD}}$/$\overline{\text{HOLDA}}$ Timing

BUSREQ TIMING

switching characteristics over recommended operating conditions for the BUSREQ cycles (see Figure 30)

NO.	PARAMETER		−150 −167		UNIT
			MIN	MAX	
1	$t_{d(EKOH-BUSRV)}$	Delay time, ECLKOUT high to BUSREQ valid	1.5	11	ns

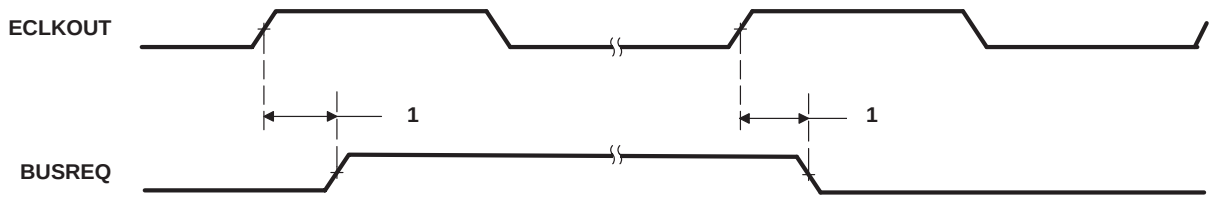

Figure 30. BUSREQ Timing

RESET TIMING

timing requirements for reset† (see Figure 31)

NO.			−150 −167 MIN	−150 −167 MAX	UNIT
1	$t_{w(RST)}$	Width of the $\overline{RESET}$ pulse (PLL stable)‡	10P		ns
		Width of the $\overline{RESET}$ pulse (PLL needs to sync up)§	250		µs
14	$t_{su(HD)}$	Setup time, HD boot configuration bits valid before $\overline{RESET}$ high¶	2P		ns
15	$t_{h(HD)}$	Hold time, HD boot configuration bits valid after $\overline{RESET}$ high¶	2P		ns

† P = 1/CPU clock frequency in ns. For example, when running parts at 167 MHz, use P = 6 ns.
‡ This parameter applies to CLKMODE x1 when CLKIN is stable, and applies to CLKMODE x4 when CLKIN and PLL are stable.
§ This parameter applies to CLKMODE x4 only (it does not apply to CLKMODE x1). The $\overline{RESET}$ signal is not connected internally to the clock PLL circuit. The PLL, however, may need up to 250 µs to stabilize following device power up or after PLL configuration has been changed. During that time, $\overline{RESET}$ must be asserted to ensure proper device operation. See the *clock PLL* section for PLL lock times.
¶ HD[4:3] are the boot configuration pins during device reset.

switching characteristics over recommended operating conditions during reset†#‖ (see Figure 31)

NO.	PARAMETER		−150 −167 MIN	−150 −167 MAX	UNIT
2	$t_{d(RSTL-ECKI)}$	Delay time, $\overline{RESET}$ low to ECLKIN synchronized internally	2P + 3E	3P + 4E	ns
3	$t_{d(RSTH-ECKI)}$	Delay time, $\overline{RESET}$ high to ECLKIN synchronized internally	2P + 3E	3P + 4E	ns
4	$t_{d(RSTL-EMIFZHZ)}$	Delay time, $\overline{RESET}$ low to EMIF Z group high impedance	2P + 3E		ns
5	$t_{d(RSTH-EMIFZV)}$	Delay time, $\overline{RESET}$ high to EMIF Z group valid		3P + 4E	ns
6	$t_{d(RSTL-EMIFHIV)}$	Delay time, $\overline{RESET}$ low to EMIF high group invalid	2P + 3E		ns
7	$t_{d(RSTH-EMIFHV)}$	Delay time, $\overline{RESET}$ high to EMIF high group valid		3P + 4E	ns
8	$t_{d(RSTL-EMIFLIV)}$	Delay time, $\overline{RESET}$ low to EMIF low group invalid	2P + 3E		ns
9	$t_{d(RSTH-EMIFLV)}$	Delay time, $\overline{RESET}$ high to EMIF low group valid		3P + 4E	ns
10	$t_{d(RSTL-HIGHIV)}$	Delay time, $\overline{RESET}$ low to high group invalid	2P		ns
11	$t_{d(RSTH-HIGHV)}$	Delay time, $\overline{RESET}$ high to high group valid		4P	ns
12	$t_{d(RSTL-ZHZ)}$	Delay time, $\overline{RESET}$ low to Z group high impedance	2P		ns
13	$t_{d(RSTH-ZV)}$	Delay time, $\overline{RESET}$ high to Z group valid	2P		ns

† P = 1/CPU clock frequency in ns. For example, when running parts at 167 MHz, use P = 6 ns.
# E = ECLKIN period in ns
‖ EMIF Z group consists of: EA[21:2], ED[31:0], $\overline{CE}$[3:0], $\overline{BE}$[3:0], $\overline{ARE}$/$\overline{SDCAS}$/$\overline{SSADS}$, $\overline{AWE}$/$\overline{SDWE}$/$\overline{SSWE}$, and $\overline{AOE}$/$\overline{SDRAS}$/$\overline{SSOE}$
EMIF high group consists of: HOLDA
EMIF low group consists of: BUSREQ
High group consists of: $\overline{HRDY}$ and $\overline{HINT}$
Z group consists of: HD[15:0], CLKX0, CLKX1, FSX0, FSX1, DX0, DX1, CLKR0, CLKR1, FSR0, FSR1, TOUT0, and TOUT1.

RESET TIMING (CONTINUED)

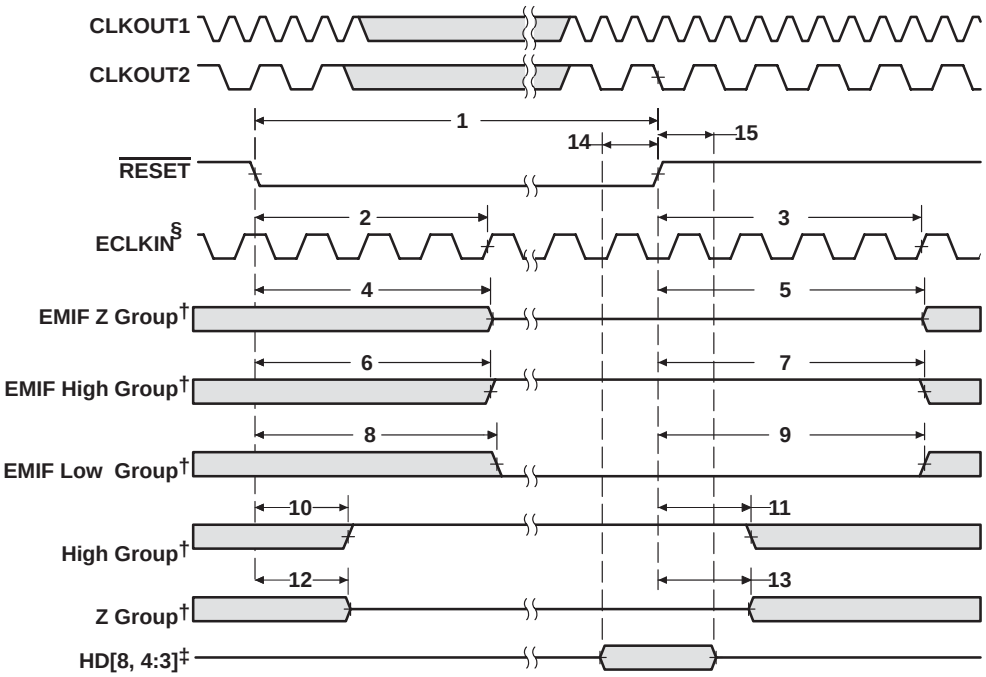

§ ECLKIN should be provided during reset in order to drive EMIF signals to the correct reset values. ECLKOUT continues to clock as long as ECLKIN is provided.

† EMIF Z group consists of: EA[21:2], ED[31:0], $\overline{\text{CE}}$[3:0], $\overline{\text{BE}}$[3:0], $\overline{\text{ARE}}$/$\overline{\text{SDCAS}}$/$\overline{\text{SSADS}}$, $\overline{\text{AWE}}$/$\overline{\text{SDWE}}$/$\overline{\text{SSWE}}$, and $\overline{\text{AOE}}$/$\overline{\text{SDRAS}}$/$\overline{\text{SSOE}}$
EMIF high group consists of: HOLDA
EMIF low group consists of: BUSREQ
High group consists of: $\overline{\text{HRDY}}$ and $\overline{\text{HINT}}$
Z group consists of: HD[15:0], CLKX0, CLKX1, FSX0, FSX1, DX0, DX1, CLKR0, CLKR1, FSR0, FSR1, TOUT0, and TOUT1.

‡ HD[8, 4:3] are the endianness and boot configuration pins during device reset.

Figure 31. Reset Timing

EXTERNAL INTERRUPT TIMING

timing requirements for external interrupts† (see Figure 32)

NO.			−150 −167		UNIT
			MIN	MAX	
1	$t_{w(ILOW)}$	Width of the interrupt pulse low	2P		ns
2	$t_{w(IHIGH)}$	Width of the interrupt pulse high	2P		ns

† P = 1/CPU clock frequency in ns. For example, when running parts at 167 MHz, use P = 6 ns.

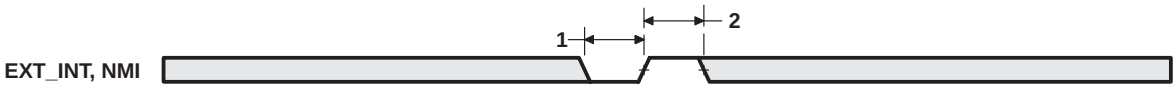

Figure 32. External/NMI Interrupt Timing

HOST-PORT INTERFACE TIMING

timing requirements for host-port interface cycles [C6211]†‡ (see Figure 33, Figure 34, Figure 35, and Figure 36)

NO.			C6211−150 C6211−167		UNIT
			MIN	MAX	
1	$t_{su(SELV-HSTBL)}$	Setup time, select signals§ valid before $\overline{HSTROBE}$ low	5		ns
2	$t_{h(HSTBL-SELV)}$	Hold time, select signals§ valid after $\overline{HSTROBE}$ low	4		ns
3	$t_{w(HSTBL)}$	Pulse duration, $\overline{HSTROBE}$ low	4P		ns
4	$t_{w(HSTBH)}$	Pulse duration, $\overline{HSTROBE}$ high between consecutive accesses	4P		ns
10	$t_{su(SELV-HASL)}$	Setup time, select signals§ valid before $\overline{HAS}$ low	5		ns
11	$t_{h(HASL-SELV)}$	Hold time, select signals§ valid after $\overline{HAS}$ low	3		ns
12	$t_{su(HDV-HSTBH)}$	Setup time, host data valid before $\overline{HSTROBE}$ high	5		ns
13	$t_{h(HSTBH-HDV)}$	Hold time, host data valid after $\overline{HSTROBE}$ high	3		ns
14	$t_{h(HRDYL-HSTBL)}$	Hold time, $\overline{HSTROBE}$ low after $\overline{HRDY}$ low. $\overline{HSTROBE}$ should not be inactivated until $\overline{HRDY}$ is active (low); otherwise, HPI writes will not complete properly.	2		ns
18	$t_{su(HASL-HSTBL)}$	Setup time, $\overline{HAS}$ low before $\overline{HSTROBE}$ low	2		ns
19	$t_{h(HSTBL-HASL)}$	Hold time, $\overline{HAS}$ low after $\overline{HSTROBE}$ low	2		ns

† $\overline{HSTROBE}$ refers to the following logical operation on $\overline{HCS}$, $\overline{HDS1}$, and $\overline{HDS2}$: [NOT($\overline{HDS1}$ XOR $\overline{HDS2}$)] OR $\overline{HCS}$.
‡ P = 1/CPU clock frequency in ns. For example, when running parts at 167 MHz, use P = 6 ns.
§ Select signals include: HCNTL[1:0], HR/$\overline{W}$, and HHWIL.

switching characteristics over recommended operating conditions during host-port interface cycles [C6211]†‡ (see Figure 33, Figure 34, Figure 35, and Figure 36)

NO.	PARAMETER		C6211−150 C6211−167		UNIT
			MIN	MAX	
5	$t_{d(HCS-HRDY)}$	Delay time, $\overline{HCS}$ to $\overline{HRDY}$¶	1	15	ns
6	$t_{d(HSTBL-HRDYH)}$	Delay time, $\overline{HSTROBE}$ low to $\overline{HRDY}$ high#	3	15	ns
7	$t_{d(HSTBL-HDLZ)}$	Delay time, $\overline{HSTROBE}$ low to HD low impedance for an HPI read	2		ns
8	$t_{d(HDV-HRDYL)}$	Delay time, HD valid to $\overline{HRDY}$ low	2P − 4	2P	ns
9	$t_{oh(HSTBH-HDV)}$	Output hold time, HD valid after $\overline{HSTROBE}$ high	3	15	ns
15	$t_{d(HSTBH-HDHZ)}$	Delay time, $\overline{HSTROBE}$ high to HD high impedance	3	15	ns
16	$t_{d(HSTBL-HDV)}$	Delay time, $\overline{HSTROBE}$ low to HD valid	3	15	ns
17	$t_{d(HSTBH-HRDYH)}$	Delay time, $\overline{HSTROBE}$ high to $\overline{HRDY}$ high‖	3	15	ns
20	$t_{d(HASL-HRDYH)}$	Delay time, $\overline{HAS}$ low to $\overline{HRDY}$ high	3	15	ns

† $\overline{HSTROBE}$ refers to the following logical operation on $\overline{HCS}$, $\overline{HDS1}$, and $\overline{HDS2}$: [NOT($\overline{HDS1}$ XOR $\overline{HDS2}$)] OR $\overline{HCS}$.
‡ P = 1/CPU clock frequency in ns. For example, when running parts at 167 MHz, use P = 6 ns.
¶ $\overline{HCS}$ enables $\overline{HRDY}$, and $\overline{HRDY}$ is always low when $\overline{HCS}$ is high. The case where $\overline{HRDY}$ goes high when $\overline{HCS}$ falls indicates that HPI is busy completing a previous HPID write or READ with autoincrement.
# This parameter is used during an HPID read. At the beginning of the first half-word transfer on the falling edge of $\overline{HSTROBE}$, the HPI sends the request to the EDMA internal address generation hardware, and $\overline{HRDY}$ remains high until the EDMA internal address generation hardware loads the requested data into HPID.
‖ This parameter is used after the second half-word of an HPID write or autoincrement read. $\overline{HRDY}$ remains low if the access is not an HPID write or autoincrement read. Reading or writing to HPIC or HPIA does not affect the $\overline{HRDY}$ signal.

HOST-PORT INTERFACE TIMING (CONTINUED)

timing requirements for host-port interface cycles [C6211BGFNA/C6211B]†‡ (see Figure 33, Figure 34, Figure 35, and Figure 36)

NO.			C6211B−150 C6211B−167 C6211BGFNA−150		UNIT
			MIN	MAX	
1	$t_{su(SELV-HSTBL)}$	Setup time, select signals§ valid before $\overline{HSTROBE}$ low	5		ns
2	$t_{h(HSTBL-SELV)}$	Hold time, select signals§ valid after $\overline{HSTROBE}$ low	4		ns
3	$t_{w(HSTBL)}$	Pulse duration, $\overline{HSTROBE}$ low	4P		ns
4	$t_{w(HSTBH)}$	Pulse duration, $\overline{HSTROBE}$ high between consecutive accesses	4P		ns
10	$t_{su(SELV-HASL)}$	Setup time, select signals§ valid before $\overline{HAS}$ low	5		ns
11	$t_{h(HASL-SELV)}$	Hold time, select signals§ valid after $\overline{HAS}$ low	3		ns
12	$t_{su(HDV-HSTBH)}$	Setup time, host data valid before $\overline{HSTROBE}$ high	5		ns
13	$t_{h(HSTBH-HDV)}$	Hold time, host data valid after $\overline{HSTROBE}$ high	3		ns
14	$t_{h(HRDYL-HSTBL)}$	Hold time, $\overline{HSTROBE}$ low after $\overline{HRDY}$ low. $\overline{HSTROBE}$ should not be inactivated until $\overline{HRDY}$ is active (low); otherwise, HPI writes will not complete properly.	2		ns
18	$t_{su(HASL-HSTBL)}$	Setup time, $\overline{HAS}$ low before $\overline{HSTROBE}$ low	2		ns
19	$t_{h(HSTBL-HASL)}$	Hold time, $\overline{HAS}$ low after $\overline{HSTROBE}$ low	2		ns

† $\overline{HSTROBE}$ refers to the following logical operation on $\overline{HCS}$, $\overline{HDS1}$, and $\overline{HDS2}$: [NOT($\overline{HDS1}$ XOR $\overline{HDS2}$)] OR $\overline{HCS}$.
‡ P = 1/CPU clock frequency in ns. For example, when running parts at 167 MHz, use P = 6 ns.
§ Select signals include: HCNTL[1:0], HR/$\overline{W}$, and HHWIL.

switching characteristics over recommended operating conditions during host-port interface cycles [C6211BGFNA/C6211B]†‡ (see Figure 33, Figure 34, Figure 35, and Figure 36)

NO.	PARAMETER		C6211BGFNA−150		C6211B−150 C6211B−167		UNIT
			MIN	MAX	MIN	MAX	
5	$t_{d(HCS-HRDY)}$	Delay time, $\overline{HCS}$ to $\overline{HRDY}$¶	1	13	1	12	ns
6	$t_{d(HSTBL-HRDYH)}$	Delay time, $\overline{HSTROBE}$ low to $\overline{HRDY}$ high#	3	13	3	12	ns
7	$t_{d(HSTBL-HDLZ)}$	Delay time, $\overline{HSTROBE}$ low to HD low impedance for an HPI read	2		2		ns
8	$t_{d(HDV-HRDYL)}$	Delay time, HD valid to $\overline{HRDY}$ low	2P − 4	2P	2P − 4	2P	ns
9	$t_{oh(HSTBH-HDV)}$	Output hold time, HD valid after $\overline{HSTROBE}$ high	3	13	3	12	ns
15	$t_{d(HSTBH-HDHZ)}$	Delay time, $\overline{HSTROBE}$ high to HD high impedance	3	13	3	12	ns
16	$t_{d(HSTBL-HDV)}$	Delay time, $\overline{HSTROBE}$ low to HD valid	3	13	3	12	ns
17	$t_{d(HSTBH-HRDYH)}$	Delay time, $\overline{HSTROBE}$ high to $\overline{HRDY}$ high‖	3	13	3	12	ns
20	$t_{d(HASL-HRDYH)}$	Delay time, $\overline{HAS}$ low to $\overline{HRDY}$ high	3	13	3	12	ns

† $\overline{HSTROBE}$ refers to the following logical operation on $\overline{HCS}$, $\overline{HDS1}$, and $\overline{HDS2}$: [NOT($\overline{HDS1}$ XOR $\overline{HDS2}$)] OR $\overline{HCS}$.
‡ P = 1/CPU clock frequency in ns. For example, when running parts at 167 MHz, use P = 6 ns.
¶ $\overline{HCS}$ enables $\overline{HRDY}$, and $\overline{HRDY}$ is always low when $\overline{HCS}$ is high. The case where $\overline{HRDY}$ goes high when $\overline{HCS}$ falls indicates that HPI is busy completing a previous HPID write or READ with autoincrement.
# This parameter is used during an HPID read. At the beginning of the first half-word transfer on the falling edge of $\overline{HSTROBE}$, the HPI sends the request to the EDMA internal address generation hardware, and $\overline{HRDY}$ remains high until the EDMA internal address generation hardware loads the requested data into HPID.
‖ This parameter is used after the second half-word of an HPID write or autoincrement read. $\overline{HRDY}$ remains low if the access is not an HPID write or autoincrement read. Reading or writing to HPIC or HPIA does not affect the $\overline{HRDY}$ signal.

HOST-PORT INTERFACE TIMING (CONTINUED)

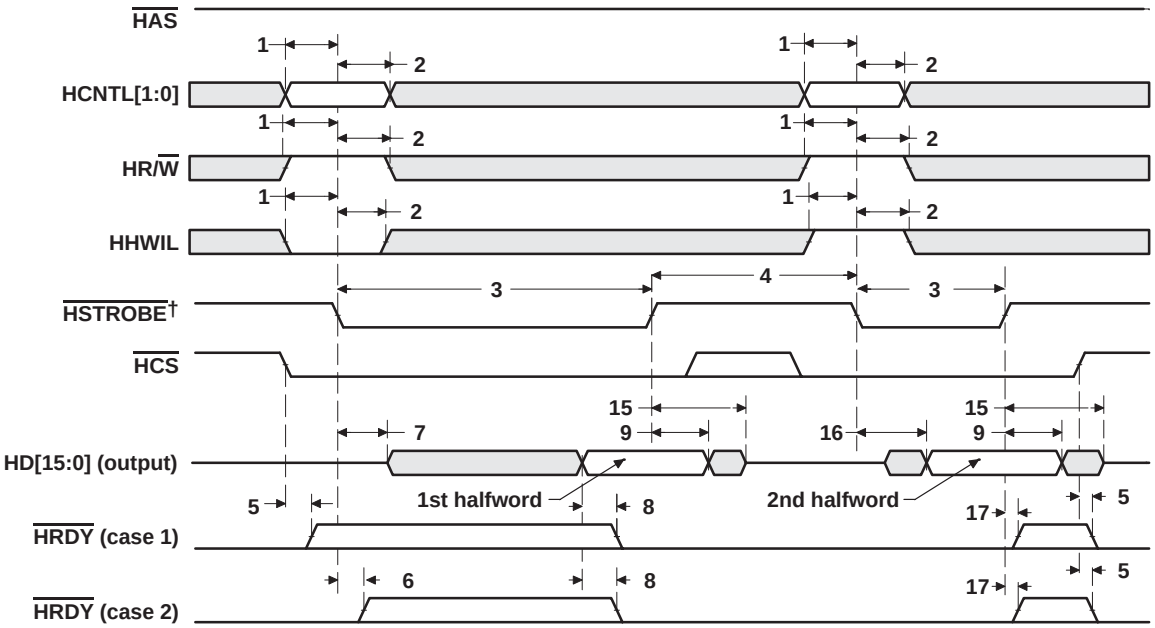

† HSTROBE refers to the following logical operation on HCS, HDS1, and HDS2: [NOT(HDS1 XOR HDS2)] OR HCS.

Figure 33. HPI Read Timing (HAS Not Used, Tied High)

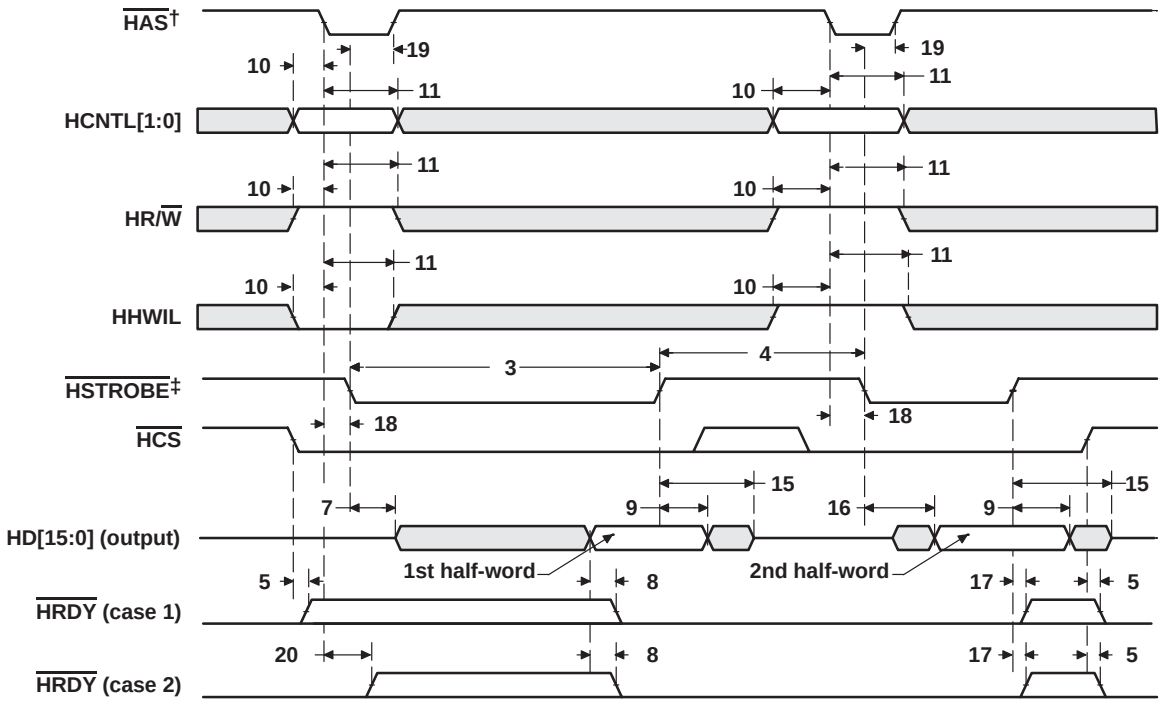

† For correct operation, strobe the HAS signal only once per HSTROBE active cycle.
‡ HSTROBE refers to the following logical operation on HCS, HDS1, and HDS2: [NOT(HDS1 XOR HDS2)] OR HCS.

Figure 34. HPI Read Timing (HAS Used)

HOST-PORT INTERFACE TIMING (CONTINUED)

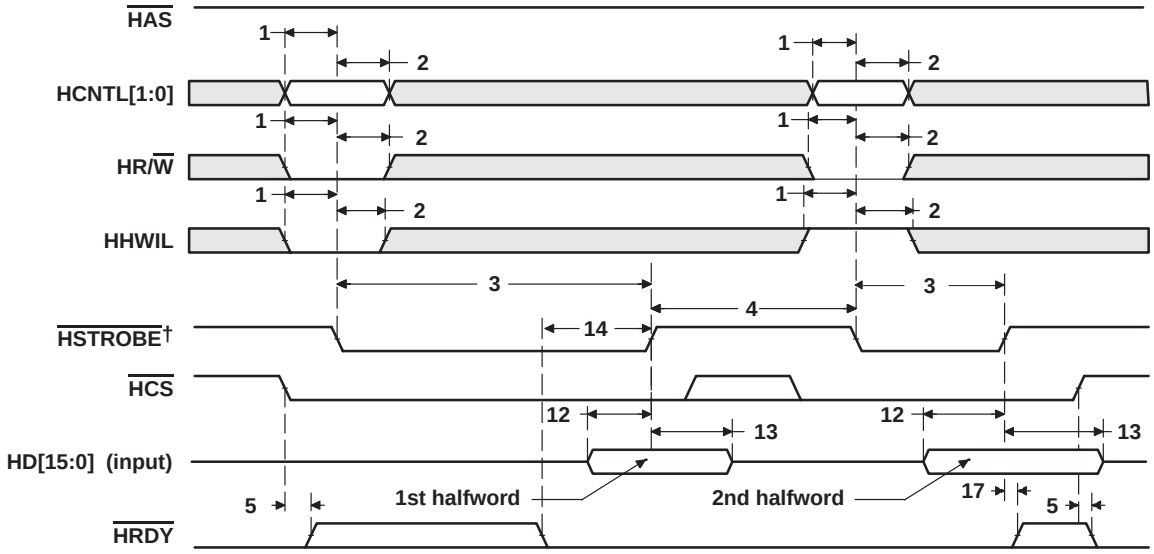

† HSTROBE refers to the following logical operation on HCS, HDS1, and HDS2: [NOT(HDS1 XOR HDS2)] OR HCS.

Figure 35. HPI Write Timing (HAS Not Used, Tied High)

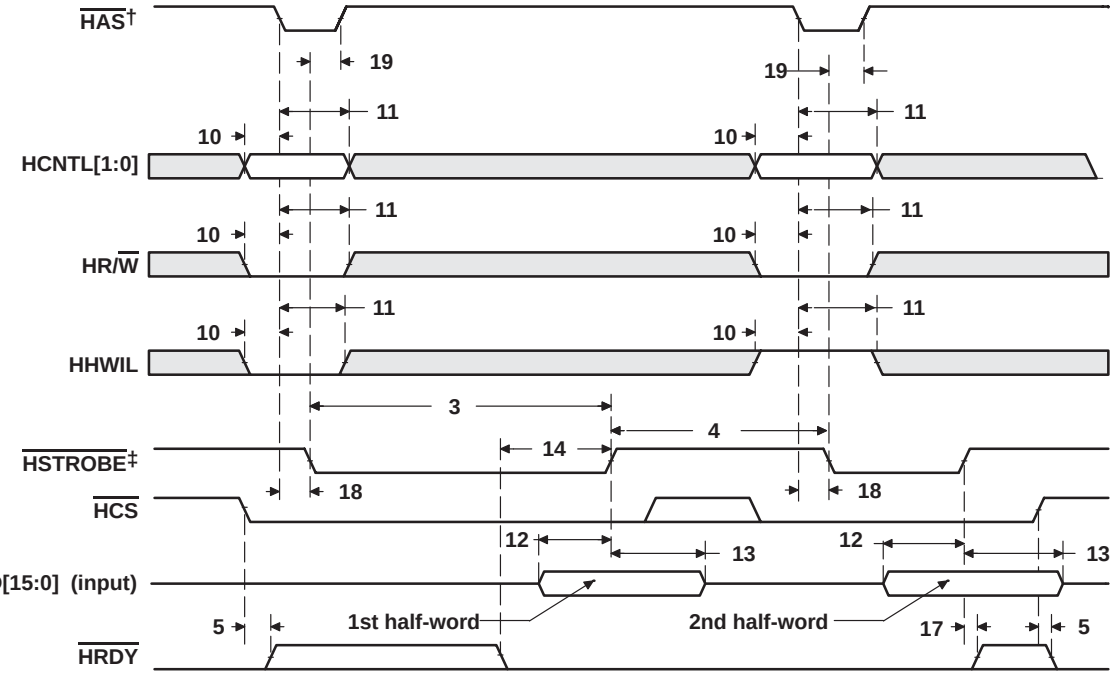

† For correct operation, strobe the HAS signal only once per HSTROBE active cycle.
‡ HSTROBE refers to the following logical operation on HCS, HDS1, and HDS2: [NOT(HDS1 XOR HDS2)] OR HCS.

Figure 36. HPI Write Timing (HAS Used)

MULTICHANNEL BUFFERED SERIAL PORT TIMING

timing requirements for McBSP†‡ (see Figure 37)

NO.				−150 −167 MIN	MAX	UNIT
2	$t_{c(CKRX)}$	Cycle time, CLKR/X	CLKR/X ext	2P§		ns
3	$t_{w(CKRX)}$	Pulse duration, CLKR/X high or CLKR/X low	CLKR/X ext	$0.5t_{c(CKRX)} - 1$		ns
5	$t_{su(FRH-CKRL)}$	Setup time, external FSR high before CLKR low	CLKR int	20		ns
			CLKR ext	1		
6	$t_{h(CKRL-FRH)}$	Hold time, external FSR high after CLKR low	CLKR int	6		ns
			CLKR ext	3		
7	$t_{su(DRV-CKRL)}$	Setup time, DR valid before CLKR low	CLKR int	22		ns
			CLKR ext	3		
8	$t_{h(CKRL-DRV)}$	Hold time, DR valid after CLKR low	CLKR int	3		ns
			CLKR ext	4		
10	$t_{su(FXH-CKXL)}$	Setup time, external FSX high before CLKX low	CLKX int	23		ns
			CLKX ext	1		
11	$t_{h(CKXL-FXH)}$	Hold time, external FSX high after CLKX low	CLKX int	6		ns
			CLKX ext	3		

† CLKRP = CLKXP = FSRP = FSXP = 0. If polarity of any of the signals is inverted, then the timing references of that signal are also inverted.
‡ P = 1/CPU clock frequency in ns. For example, when running parts at 167 MHz, use P = 6 ns.
§ The minimum CLKR/X period is twice the CPU cycle time (2P). This means that the maximum bit rate for communications between the McBSP and other device is 83 Mbps for 167 MHz CPU clock or 75 Mbps for 150 MHz CPU clock; where the McBSP is either the master or the slave. Care must be taken to ensure that the AC timings specified in this data sheet are met. The maximum bit rate for McBSP-to-McBSP communications is 33 Mbps; therefore, the minimum CLKR/X clock cycle is either twice the CPU cycle time (2P), or 30 ns (33 MHz), whichever value is larger. For example, when running parts at 167 MHz (P = 6 ns), use 30 ns as the minimum CLKR/X clock cycle (by setting the appropriate CLKGDV ratio or external clock source). When running parts at 60 MHz (P = 16.67 ns), use 2P = 33 ns (30 MHz) as the minimum CLKR/X clock cycle. The maximum bit rate for McBSP-to-McBSP communications applies when the serial port is a master of the clock and frame syncs (with CLKR connected to CLKX, FSR connected to FSX, CLKXM = FSXM = 1, and CLKRM = FSRM = 0) in data delay 1 or 2 mode (R/XDATDLY = 01b or 10b) and the other device the McBSP communicates to is a slave.

MULTICHANNEL BUFFERED SERIAL PORT TIMING (CONTINUED)

switching characteristics over recommended operating conditions for McBSP†‡ (see Figure 37)

NO.	PARAMETER			−150 −167 MIN	−150 −167 MAX	UNIT
1	$t_{d(CKSH-CKRXH)}$	Delay time, CLKS high to CLKR/X high for internal CLKR/X generated from CLKS input		4	26	ns
2	$t_{c(CKRX)}$	Cycle time, CLKR/X	CLKR/X int	2P§¶		ns
3	$t_{w(CKRX)}$	Pulse duration, CLKR/X high or CLKR/X low	CLKR/X int	C − 1#	C + 1#	ns
4	$t_{d(CKRH-FRV)}$	Delay time, CLKR high to internal FSR valid	CLKR int	−11	3	ns
9	$t_{d(CKXH-FXV)}$	Delay time, CLKX high to internal FSX valid	CLKX int	−11	3	ns
			CLKX ext	3	9	
12	$t_{dis(CKXH-DXHZ)}$	Disable time, DX high impedance following last data bit from CLKX high	CLKX int	−9	4	ns
			CLKX ext	3	9	
13	$t_{d(CKXH-DXV)}$	Delay time, CLKX high to DX valid	CLKX int	−9+ D1‖	4 + D2‖	ns
			CLKX ext	3 + D1‖	19 + D2‖	
14	$t_{d(FXH-DXV)}$	Delay time, FSX high to DX valid ONLY applies when in data delay 0 (XDATDLY = 00b) mode	FSX int	−1	3	ns
			FSX ext	3	9	

† CLKRP = CLKXP = FSRP = FSXP = 0. If polarity of any of the signals is inverted, then the timing references of that signal are also inverted.
‡ Minimum delay times also represent minimum output hold times.
§ P = 1/CPU clock frequency in ns. For example, when running parts at 167 MHz, use P = 6 ns.
¶ The minimum CLKR/X period is twice the CPU cycle time (2P). This means that the maximum bit rate for communications between the McBSP and other device is 83 Mbps for 167 MHz CPU clock or 75 Mbps for 150 MHz CPU clock; where the McBSP is either the master or the slave. Care must be taken to ensure that the AC timings specified in this data sheet are met. The maximum bit rate for McBSP-to-McBSP communications is 33 Mbps; therefore, the minimum CLKR/X clock cycle is either twice the CPU cycle time (2P), or 30 ns (33 MHz), whichever value is larger. For example, when running parts at 167 MHz (P = 6 ns), use 30 ns as the minimum CLKR/X clock cycle (by setting the appropriate CLKGDV ratio or external clock source). When running parts at 60 MHz (P = 16.67 ns), use 2P = 33 ns (30 MHz) as the minimum CLKR/X clock cycle. The maximum bit rate for McBSP-to-McBSP communications applies when the serial port is a master of the clock and frame syncs (with CLKR connected to CLKX, FSR connected to FSX, CLKXM = FSXM = 1, and CLKRM = FSRM = 0) in data delay 1 or 2 mode (R/XDATDLY = 01b or 10b) and the other device the McBSP communicates to is a slave.
# C = H or L
S = sample rate generator input clock = 2P if CLKSM = 1 (P = 1/CPU clock frequency)
= sample rate generator input clock = P_clks if CLKSM = 0 (P_clks = CLKS period)
H = CLKX high pulse width = (CLKGDV/2 + 1) * S if CLKGDV is even
= (CLKGDV + 1)/2 * S if CLKGDV is odd or zero
L = CLKX low pulse width = (CLKGDV/2) * S if CLKGDV is even
= (CLKGDV + 1)/2 * S if CLKGDV is odd or zero
CLKGDV should be set appropriately to ensure the McBSP bit rate does not exceed the maximum limit (see ¶ footnote above).
‖ Extra delay from CLKX high to DX valid applies *only* to the first data bit of a device, if and only if DXENA = 1 in SPCR.
If DXENA = 0, then D1 = D2 = 0
If DXENA = 1, then D1 = 2P, D2 = 4P

MULTICHANNEL BUFFERED SERIAL PORT TIMING (CONTINUED)

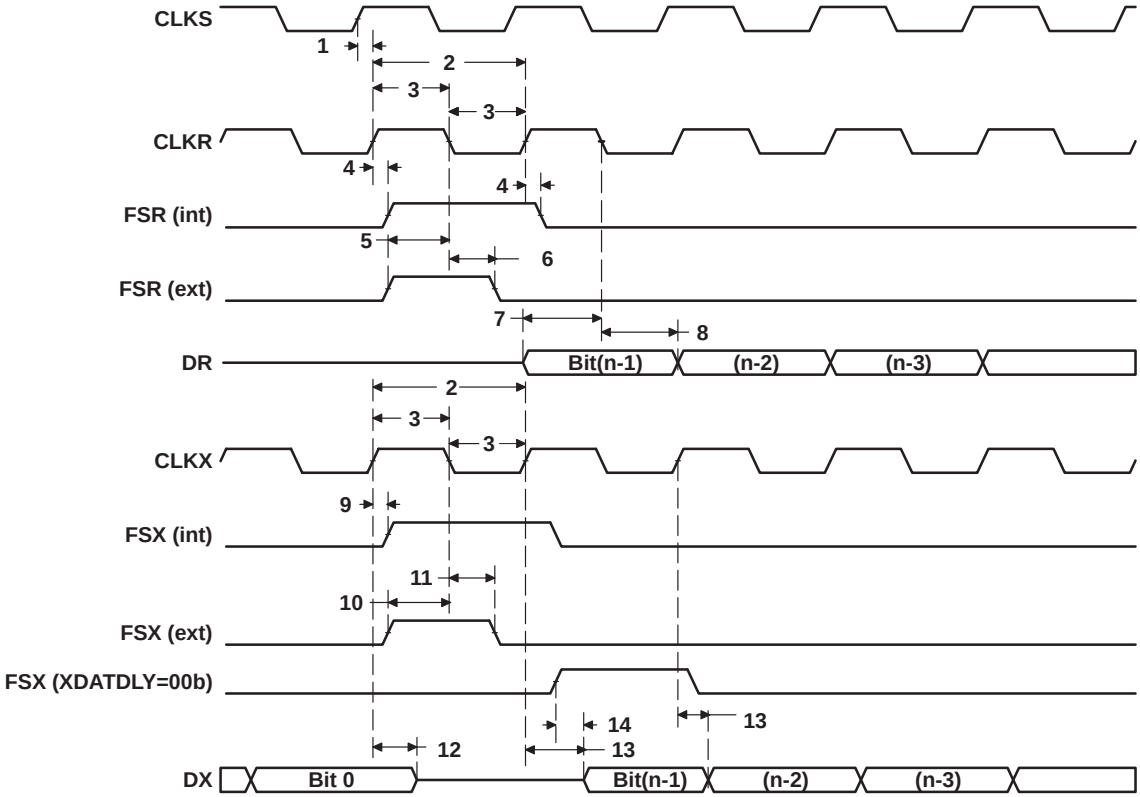

Figure 37. McBSP Timings

MULTICHANNEL BUFFERED SERIAL PORT TIMING (CONTINUED)

timing requirements for FSR when GSYNC = 1 (see Figure 38)

NO.		−150 −167		UNIT
		MIN	MAX	
1	$t_{su(FRH-CKSH)}$ Setup time, FSR high before CLKS high	4		ns
2	$t_{h(CKSH-FRH)}$ Hold time, FSR high after CLKS high	4		ns

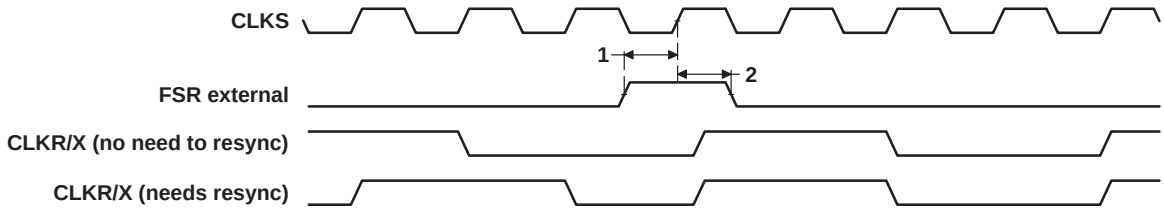

Figure 38. FSR Timing When GSYNC = 1

MULTICHANNEL BUFFERED SERIAL PORT TIMING (CONTINUED)

timing requirements for McBSP as SPI master or slave: CLKSTP = 10b, CLKXP = 0†‡ (see Figure 39)

NO.			−150 −167				UNIT
			MASTER		SLAVE		
			MIN	MAX	MIN	MAX	
4	$t_{su(DRV-CKXL)}$	Setup time, DR valid before CLKX low	26		2 − 6P		ns
5	$t_{h(CKXL-DRV)}$	Hold time, DR valid after CLKX low	4		6 + 12P		ns

† P = 1/CPU clock frequency in ns. For example, when running parts at 167 MHz, use P = 6 ns.
‡ For all SPI slave modes, CLKG is programmed as 1/2 of the CPU clock by setting CLKSM = CLKGDV = 1.

switching characteristics over recommended operating conditions for McBSP as SPI master or slave: CLKSTP = 10b, CLKXP = 0†‡ (see Figure 39)

NO.	PARAMETER		−150 −167				UNIT
			MASTER§		SLAVE		
			MIN	MAX	MIN	MAX	
1	$t_{h(CKXL-FXL)}$	Hold time, FSX low after CLKX low¶	T − 9	T + 9			ns
2	$t_{d(FXL-CKXH)}$	Delay time, FSX low to CLKX high#	L − 9	L + 9			ns
3	$t_{d(CKXH-DXV)}$	Delay time, CLKX high to DX valid	−9	9	6P + 4	10P + 20	ns
6	$t_{dis(CKXL-DXHZ)}$	Disable time, DX high impedance following last data bit from CLKX low	L − 9	L + 9			ns
7	$t_{dis(FXH-DXHZ)}$	Disable time, DX high impedance following last data bit from FSX high			2P + 3	6P + 20	ns
8	$t_{d(FXL-DXV)}$	Delay time, FSX low to DX valid			4P + 2	8P + 20	ns

† P = 1/CPU clock frequency in ns. For example, when running parts at 167 MHz, use P = 6 ns.
‡ For all SPI slave modes, CLKG is programmed as 1/2 of the CPU clock by setting CLKSM = CLKGDV = 1.
§ S = Sample rate generator input clock = 2P if CLKSM = 1 (P = 1/CPU clock frequency)
= Sample rate generator input clock = P_clks if CLKSM = 0 (P_clks = CLKS period)
T = CLKX period = (1 + CLKGDV) * S
H = CLKX high pulse width = (CLKGDV/2 + 1) * S if CLKGDV is even
= (CLKGDV + 1)/2 * S if CLKGDV is odd or zero
L = CLKX low pulse width = (CLKGDV/2) * S if CLKGDV is even
= (CLKGDV + 1)/2 * S if CLKGDV is odd or zero
¶ FSRP = FSXP = 1. As a SPI master, FSX is inverted to provide active-low slave-enable output. As a slave, the active-low signal input on FSX and FSR is inverted before being used internally.
CLKXM = FSXM = 1, CLKRM = FSRM = 0 for master McBSP
CLKXM = CLKRM = FSXM = FSRM = 0 for slave McBSP
# FSX should be low before the rising edge of clock to enable slave devices and then begin a SPI transfer at the rising edge of the master clock (CLKX).

MULTICHANNEL BUFFERED SERIAL PORT TIMING (CONTINUED)

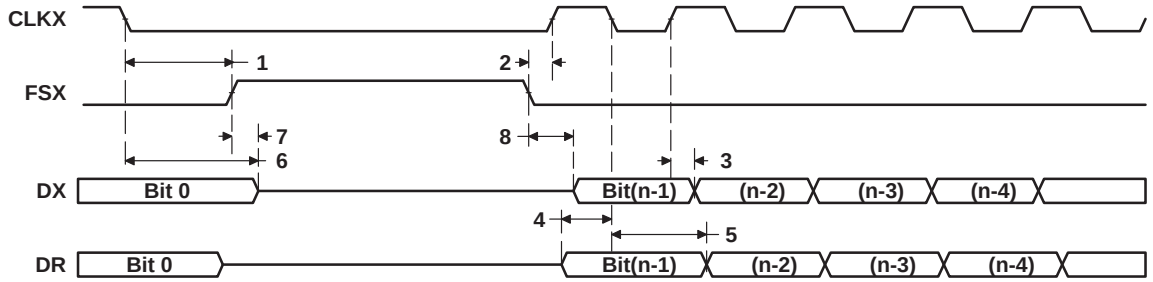

Figure 39. McBSP Timing as SPI Master or Slave: CLKSTP = 10b, CLKXP = 0

MULTICHANNEL BUFFERED SERIAL PORT TIMING (CONTINUED)

timing requirements for McBSP as SPI master or slave: CLKSTP = 11b, CLKXP = 0†‡ (see Figure 40)

NO.			−150 −167				UNIT
			MASTER		SLAVE		
			MIN	MAX	MIN	MAX	
4	$t_{su(DRV-CKXH)}$	Setup time, DR valid before CLKX high	26		2 − 6P		ns
5	$t_{h(CKXH-DRV)}$	Hold time, DR valid after CLKX high	4		6 + 12P		ns

† P = 1/CPU clock frequency in ns. For example, when running parts at 167 MHz, use P = 6 ns.
‡ For all SPI slave modes, CLKG is programmed as 1/2 of the CPU clock by setting CLKSM = CLKGDV = 1.

switching characteristics over recommended operating conditions for McBSP as SPI master or slave: CLKSTP = 11b, CLKXP = 0†‡ (see Figure 40)

NO.	PARAMETER		−150 −167				UNIT
			MASTER§		SLAVE		
			MIN	MAX	MIN	MAX	
1	$t_{h(CKXL-FXL)}$	Hold time, FSX low after CLKX low¶	L − 9	L + 9			ns
2	$t_{d(FXL-CKXH)}$	Delay time, FSX low to CLKX high#	T − 9	T + 9			ns
3	$t_{d(CKXL-DXV)}$	Delay time, CLKX low to DX valid	−9	9	6P + 4	10P + 20	ns
6	$t_{dis(CKXL-DXHZ)}$	Disable time, DX high impedance following last data bit from CLKX low	−9	9	6P + 3	10P + 20	ns
7	$t_{d(FXL-DXV)}$	Delay time, FSX low to DX valid	H − 9	H + 9	4P + 2	8P + 20	ns

† P = 1/CPU clock frequency in ns. For example, when running parts at 167 MHz, use P = 6 ns.
‡ For all SPI slave modes, CLKG is programmed as 1/2 of the CPU clock by setting CLKSM = CLKGDV = 1.
§ S = Sample rate generator input clock = 2P if CLKSM = 1 (P = 1/CPU clock frequency)
= Sample rate generator input clock = P_clks if CLKSM = 0 (P_clks = CLKS period)
T = CLKX period = (1 + CLKGDV) * S
H = CLKX high pulse width = (CLKGDV/2 + 1) * S if CLKGDV is even
= (CLKGDV + 1)/2 * S if CLKGDV is odd or zero
L = CLKX low pulse width = (CLKGDV/2) * S if CLKGDV is even
= (CLKGDV + 1)/2 * S if CLKGDV is odd or zero
¶ FSRP = FSXP = 1. As a SPI master, FSX is inverted to provide active-low slave-enable output. As a slave, the active-low signal input on FSX and FSR is inverted before being used internally.
CLKXM = FSXM = 1, CLKRM = FSRM = 0 for master McBSP
CLKXM = CLKRM = FSXM = FSRM = 0 for slave McBSP
# FSX should be low before the rising edge of clock to enable slave devices and then begin a SPI transfer at the rising edge of the master clock (CLKX).

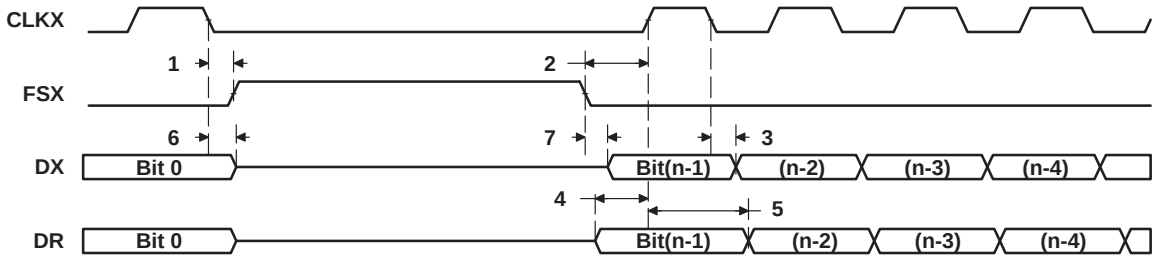

Figure 40. McBSP Timing as SPI Master or Slave: CLKSTP = 11b, CLKXP = 0

MULTICHANNEL BUFFERED SERIAL PORT TIMING (CONTINUED)

timing requirements for McBSP as SPI master or slave: CLKSTP = 10b, CLKXP = 1†‡ (see Figure 41)

NO.			−150 −167				UNIT
			MASTER		SLAVE		
			MIN	MAX	MIN	MAX	
4	$t_{su(DRV-CKXH)}$	Setup time, DR valid before CLKX high	26		2 − 6P		ns
5	$t_{h(CKXH-DRV)}$	Hold time, DR valid after CLKX high	4		6 + 12P		ns

† P = 1/CPU clock frequency in ns. For example, when running parts at 167 MHz, use P = 6 ns.
‡ For all SPI slave modes, CLKG is programmed as 1/2 of the CPU clock by setting CLKSM = CLKGDV = 1.

switching characteristics over recommended operating conditions for McBSP as SPI master or slave: CLKSTP = 10b, CLKXP = 1†‡ (see Figure 41)

NO.	PARAMETER		−150 −167				UNIT
			MASTER§		SLAVE		
			MIN	MAX	MIN	MAX	
1	$t_{h(CKXH-FXL)}$	Hold time, FSX low after CLKX high¶	T − 9	T + 9			ns
2	$t_{d(FXL-CKXL)}$	Delay time, FSX low to CLKX low#	H − 9	H + 9			ns
3	$t_{d(CKXL-DXV)}$	Delay time, CLKX low to DX valid	−9	9	6P + 4	10P + 20	ns
6	$t_{dis(CKXH-DXHZ)}$	Disable time, DX high impedance following last data bit from CLKX high	H − 9	H + 9			ns
7	$t_{dis(FXH-DXHZ)}$	Disable time, DX high impedance following last data bit from FSX high			2P + 3	6P + 20	ns
8	$t_{d(FXL-DXV)}$	Delay time, FSX low to DX valid			4P + 2	8P + 20	ns

† P = 1/CPU clock frequency in ns. For example, when running parts at 167 MHz, use P = 6 ns.
‡ For all SPI slave modes, CLKG is programmed as 1/2 of the CPU clock by setting CLKSM = CLKGDV = 1.
§ S = Sample rate generator input clock = 2P if CLKSM = 1 (P = 1/CPU clock frequency)
= Sample rate generator input clock = P_clks if CLKSM = 0 (P_clks = CLKS period)
T = CLKX period = (1 + CLKGDV) * S
H = CLKX high pulse width = (CLKGDV/2 + 1) * S if CLKGDV is even
= (CLKGDV + 1)/2 * S if CLKGDV is odd or zero
L = CLKX low pulse width = (CLKGDV/2) * S if CLKGDV is even
= (CLKGDV + 1)/2 * S if CLKGDV is odd or zero
¶ FSRP = FSXP = 1. As a SPI master, FSX is inverted to provide active-low slave-enable output. As a slave, the active-low signal input on FSX and FSR is inverted before being used internally.
CLKXM = FSXM = 1, CLKRM = FSRM = 0 for master McBSP
CLKXM = CLKRM = FSXM = FSRM = 0 for slave McBSP
# FSX should be low before the rising edge of clock to enable slave devices and then begin a SPI transfer at the rising edge of the master clock (CLKX).

MULTICHANNEL BUFFERED SERIAL PORT TIMING (CONTINUED)

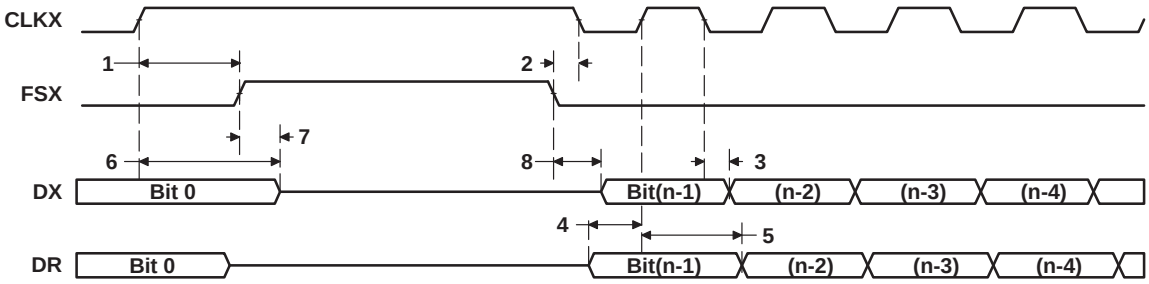

Figure 41. McBSP Timing as SPI Master or Slave: CLKSTP = 10b, CLKXP = 1

MULTICHANNEL BUFFERED SERIAL PORT TIMING (CONTINUED)

timing requirements for McBSP as SPI master or slave: CLKSTP = 11b, CLKXP = 1†‡ (see Figure 42)

NO.			−150 −167				UNIT
			MASTER		SLAVE		
			MIN	MAX	MIN	MAX	
4	$t_{su(DRV-CKXH)}$	Setup time, DR valid before CLKX high	26		2 − 6P		ns
5	$t_{h(CKXH-DRV)}$	Hold time, DR valid after CLKX high	4		6 + 12P		ns

† P = 1/CPU clock frequency in ns. For example, when running parts at 167 MHz, use P = 6 ns.
‡ For all SPI slave modes, CLKG is programmed as 1/2 of the CPU clock by setting CLKSM = CLKGDV = 1.

switching characteristics over recommended operating conditions for McBSP as SPI master or slave: CLKSTP = 11b, CLKXP = 1†‡ (see Figure 42)

NO.	PARAMETER		−150 −167				UNIT
			MASTER§		SLAVE		
			MIN	MAX	MIN	MAX	
1	$t_{h(CKXH-FXL)}$	Hold time, FSX low after CLKX high¶	H − 9	H + 9			ns
2	$t_{d(FXL-CKXL)}$	Delay time, FSX low to CLKX low#	T − 9	T + 9			ns
3	$t_{d(CKXH-DXV)}$	Delay time, CLKX high to DX valid	−9	9	6P + 4	10P + 20	ns
6	$t_{dis(CKXH-DXHZ)}$	Disable time, DX high impedance following last data bit from CLKX high	−9	9	6P + 3	10P + 20	ns
7	$t_{d(FXL-DXV)}$	Delay time, FSX low to DX valid	L − 9	L + 9	4P + 2	8P + 20	ns

† P = 1/CPU clock frequency in ns. For example, when running parts at 167 MHz, use P = 6 ns.
‡ For all SPI slave modes, CLKG is programmed as 1/2 of the CPU clock by setting CLKSM = CLKGDV = 1.
§ S = Sample rate generator input clock = 2P if CLKSM = 1 (P = 1/CPU clock frequency)
= Sample rate generator input clock = P_clks if CLKSM = 0 (P_clks = CLKS period)
T = CLKX period = (1 + CLKGDV) * S
H = CLKX high pulse width = (CLKGDV/2 + 1) * S if CLKGDV is even
= (CLKGDV + 1)/2 * S if CLKGDV is odd or zero
L = CLKX low pulse width = (CLKGDV/2) * S if CLKGDV is even
= (CLKGDV + 1)/2 * S if CLKGDV is odd or zero
¶ FSRP = FSXP = 1. As a SPI master, FSX is inverted to provide active-low slave-enable output. As a slave, the active-low signal input on FSX and FSR is inverted before being used internally.
CLKXM = FSXM = 1, CLKRM = FSRM = 0 for master McBSP
CLKXM = CLKRM = FSXM = FSRM = 0 for slave McBSP
# FSX should be low before the rising edge of clock to enable slave devices and then begin a SPI transfer at the rising edge of the master clock (CLKX).

MULTICHANNEL BUFFERED SERIAL PORT TIMING (CONTINUED)

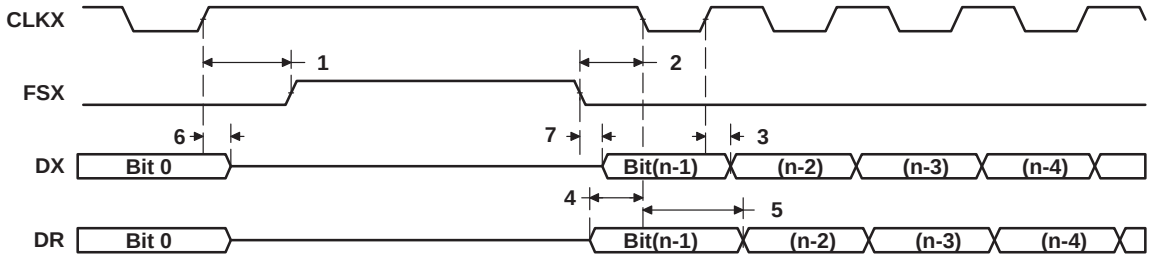

Figure 42. McBSP Timing as SPI Master or Slave: CLKSTP = 11b, CLKXP = 1

TIMER TIMING

timing requirements for timer inputs† (see Figure 43)

NO.		−150 −167 MIN	MAX	UNIT
1	$t_{w(TINPH)}$ Pulse duration, TINP high	2P		ns
2	$t_{w(TINPL)}$ Pulse duration, TINP low	2P		ns

† P = 1/CPU clock frequency in ns. For example, when running parts at 167 MHz, use P = 6 ns.

switching characteristics over recommended operating conditions for timer outputs† (see Figure 43)

NO.	PARAMETER	−150 −167 MIN	MAX	UNIT
3	$t_{w(TOUTH)}$ Pulse duration, TOUT high	4P−3		ns
4	$t_{w(TOUTL)}$ Pulse duration, TOUT low	4P−3		ns

† P = 1/CPU clock frequency in ns. For example, when running parts at 167 MHz, use P = 6 ns.

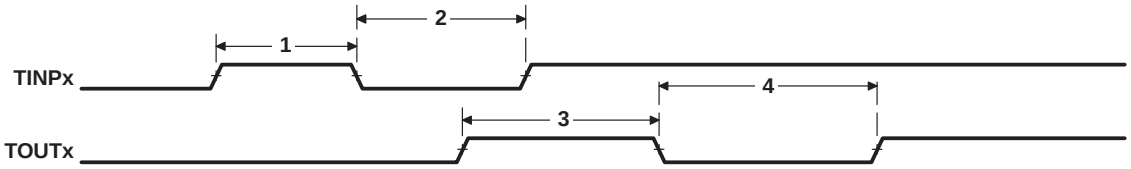

Figure 43. Timer Timing

JTAG TEST-PORT TIMING

timing requirements for JTAG test port (see Figure 44)

NO.			−150 −167 MIN	−150 −167 MAX	UNIT
1	$t_{c(TCK)}$	Cycle time, TCK	35		ns
3	$t_{su(TDIV-TCKH)}$	Setup time, TDI/TMS/$\overline{TRST}$ valid before TCK high	10		ns
4	$t_{h(TCKH-TDIV)}$	Hold time, TDI/TMS/$\overline{TRST}$ valid after TCK high	9		ns

switching characteristics over recommended operating conditions for JTAG test port (see Figure 44)

NO.	PARAMETER		−150 −167 MIN	−150 −167 MAX	UNIT
2	$t_{d(TCKL-TDOV)}$	Delay time, TCK low to TDO valid	–3	18	ns

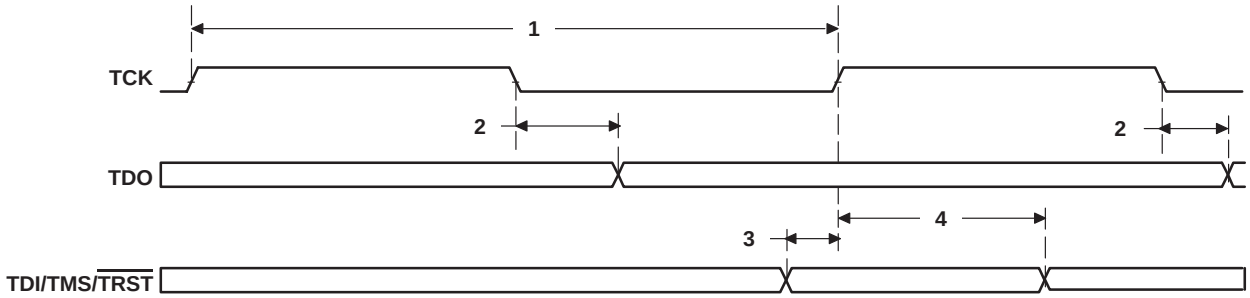

Figure 44. JTAG Test-Port Timing

MECHANICAL DATA

The following tables show the thermal resistance characteristics for the GFN and ZFN mechanical packages.

thermal resistance characteristics (S-PBGA package) for GFN

NO		°C/W	Air Flow (m/s)†
1	$R\Theta_{JC}$ Junction-to-case	6.4	N/A
2	$R\Theta_{JA}$ Junction-to-free air	25.5	0.0
3	$R\Theta_{JA}$ Junction-to-free air	23.1	0.5
4	$R\Theta_{JA}$ Junction-to-free air	22.3	1.0
5	$R\Theta_{JA}$ Junction-to-free air	21.2	2.0

† m/s = meters per second

thermal resistance characteristics (S-PBGA package) for ZFN

NO		°C/W	Air Flow (m/s)†
1	$R\Theta_{JC}$ Junction-to-case	6.4	N/A
2	$R\Theta_{JA}$ Junction-to-free air	25.5	0.0
3	$R\Theta_{JA}$ Junction-to-free air	23.1	0.5
4	$R\Theta_{JA}$ Junction-to-free air	22.3	1.0
5	$R\Theta_{JA}$ Junction-to-free air	21.2	2.0

† m/s = meters per second

packaging information

The following packaging information and addendum reflect the most current released data available for the designated device(s). This data is subject to change without notice and without revision of this document.

PACKAGING INFORMATION

Orderable Device	Status (1)	Package Type	Package Drawing	Pins	Package Qty	Eco Plan (2)	Lead/ Ball Finish	MSL Peak Temp (3)	Samples (Requires Login)
TMS320C6211BGFN150	ACTIVE	BGA	GFN	256	1	TBD	SNPB	Level-4-220C-72 HR	
TMS320C6211BGFN167	ACTIVE	BGA	GFN	256	40	TBD	SNPB	Level-4-220C-72 HR	
TMS320C6211BGFN180	OBSOLETE	BGA	GFN	256		TBD	Call TI	Call TI	
TMS320C6211BZFN150	ACTIVE	BGA	ZFN	256	1	Pb-Free (RoHS)	SNAGCU	Level-4-260C-72HRS	
TMS320C6211BZFN167	ACTIVE	BGA	ZFN	256	1	Pb-Free (RoHS)	SNAGCU	Level-4-260C-72HRS	
TMS320C6211GFN150	OBSOLETE	BGA	GFN	256		TBD	Call TI	Call TI	
TMS320C6211GFN167	OBSOLETE	BGA	GFN	256		TBD	Call TI	Call TI	
TMS320C6211GFN180	OBSOLETE	BGA	GFN	256		TBD	Call TI	Call TI	
TMS32C6211B1GFN167	OBSOLETE	BGA	GFN	256		TBD	Call TI	Call TI	
TMS32C6211BGFNA150	ACTIVE	BGA	GFN	256	40	TBD	SNPB	Level-4-220C-72 HR	
TMS32C6211BZFNA150	ACTIVE	BGA	ZFN	256	1	Pb-Free (RoHS)	SNAGCU	Level-4-260C-72HRS	
TMX320C6211GFN	OBSOLETE	BGA	GFN	256		TBD	Call TI	Call TI	
TMX320C6211GFN150	OBSOLETE	BGA	GFN	256		TBD	Call TI	Call TI	
TMX320C6211GFN167	OBSOLETE	BGA	GFN	256		TBD	Call TI	Call TI	
TMX320C6211GFN180	OBSOLETE	BGA	GFN	256		TBD	Call TI	Call TI	
TMX320C6211GFN21	OBSOLETE	BGA	GFN	256		TBD	Call TI	Call TI	
TMX320C6211GFNB	OBSOLETE	BGA	GFN	256		TBD	Call TI	Call TI	

(1) The marketing status values are defined as follows:
ACTIVE: Product device recommended for new designs.
LIFEBUY: TI has announced that the device will be discontinued, and a lifetime-buy period is in effect.
NRND: Not recommended for new designs. Device is in production to support existing customers, but TI does not recommend using this part in a new design.
PREVIEW: Device has been announced but is not in production. Samples may or may not be available.
OBSOLETE: TI has discontinued the production of the device.

(2) Eco Plan - The planned eco-friendly classification: Pb-Free (RoHS), Pb-Free (RoHS Exempt), or Green (RoHS & no Sb/Br) - please check http://www.ti.com/productcontent for the latest availability information and additional product content details.
TBD: The Pb-Free/Green conversion plan has not been defined.
Pb-Free (RoHS): TI's terms "Lead-Free" or "Pb-Free" mean semiconductor products that are compatible with the current RoHS requirements for all 6 substances, including the requirement that lead not exceed 0.1% by weight in homogeneous materials. Where designed to be soldered at high temperatures, TI Pb-Free products are suitable for use in specified lead-free processes.
Pb-Free (RoHS Exempt): This component has a RoHS exemption for either 1) lead-based flip-chip solder bumps used between the die and package, or 2) lead-based die adhesive used between the die and leadframe. The component is otherwise considered Pb-Free (RoHS compatible) as defined above.
Green (RoHS & no Sb/Br): TI defines "Green" to mean Pb-Free (RoHS compatible), and free of Bromine (Br) and Antimony (Sb) based flame retardants (Br or Sb do not exceed 0.1% by weight in homogeneous material)

(3) MSL, Peak Temp. -- The Moisture Sensitivity Level rating according to the JEDEC industry standard classifications, and peak solder temperature.

Important Information and Disclaimer: The information provided on this page represents TI's knowledge and belief as of the date that it is provided. TI bases its knowledge and belief on information provided by third parties, and makes no representation or warranty as to the accuracy of such information. Efforts are underway to better integrate information from third parties. TI has taken and continues to take reasonable steps to provide representative and accurate information but may not have conducted destructive testing or chemical analysis on incoming materials and chemicals. TI and TI suppliers consider certain information to be proprietary, and thus CAS numbers and other limited information may not be available for release.

In no event shall TI's liability arising out of such information exceed the total purchase price of the TI part(s) at issue in this document sold by TI to Customer on an annual basis.

GFN (S-PBGA-N256) **PLASTIC BALL GRID ARRAY**

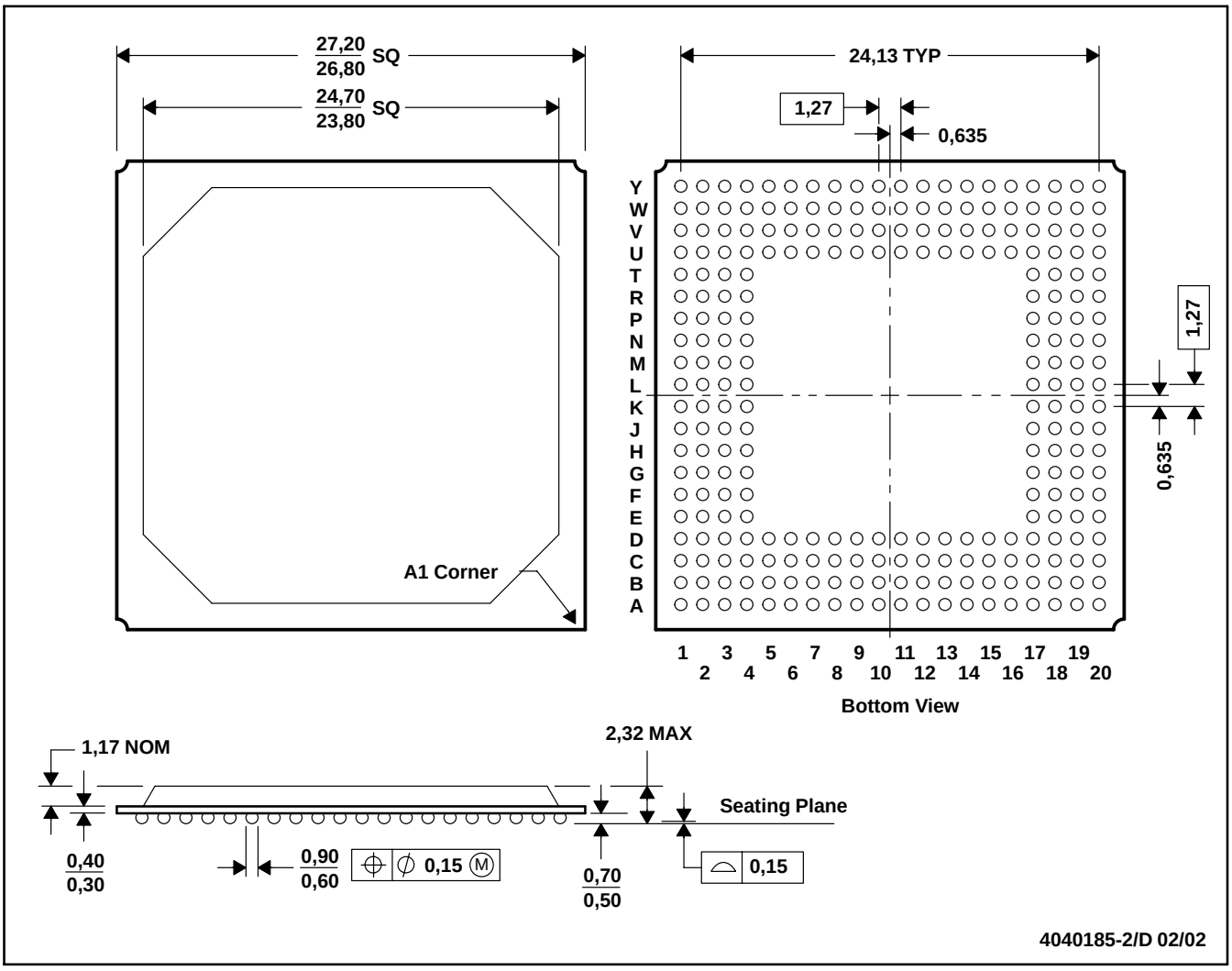

NOTES: A. All linear dimensions are in millimeters.
B. This drawing is subject to change without notice.
C. Falls within JEDEC MO-151

ZFN (S–PBGA–N256) PLASTIC BALL GRID ARRAY

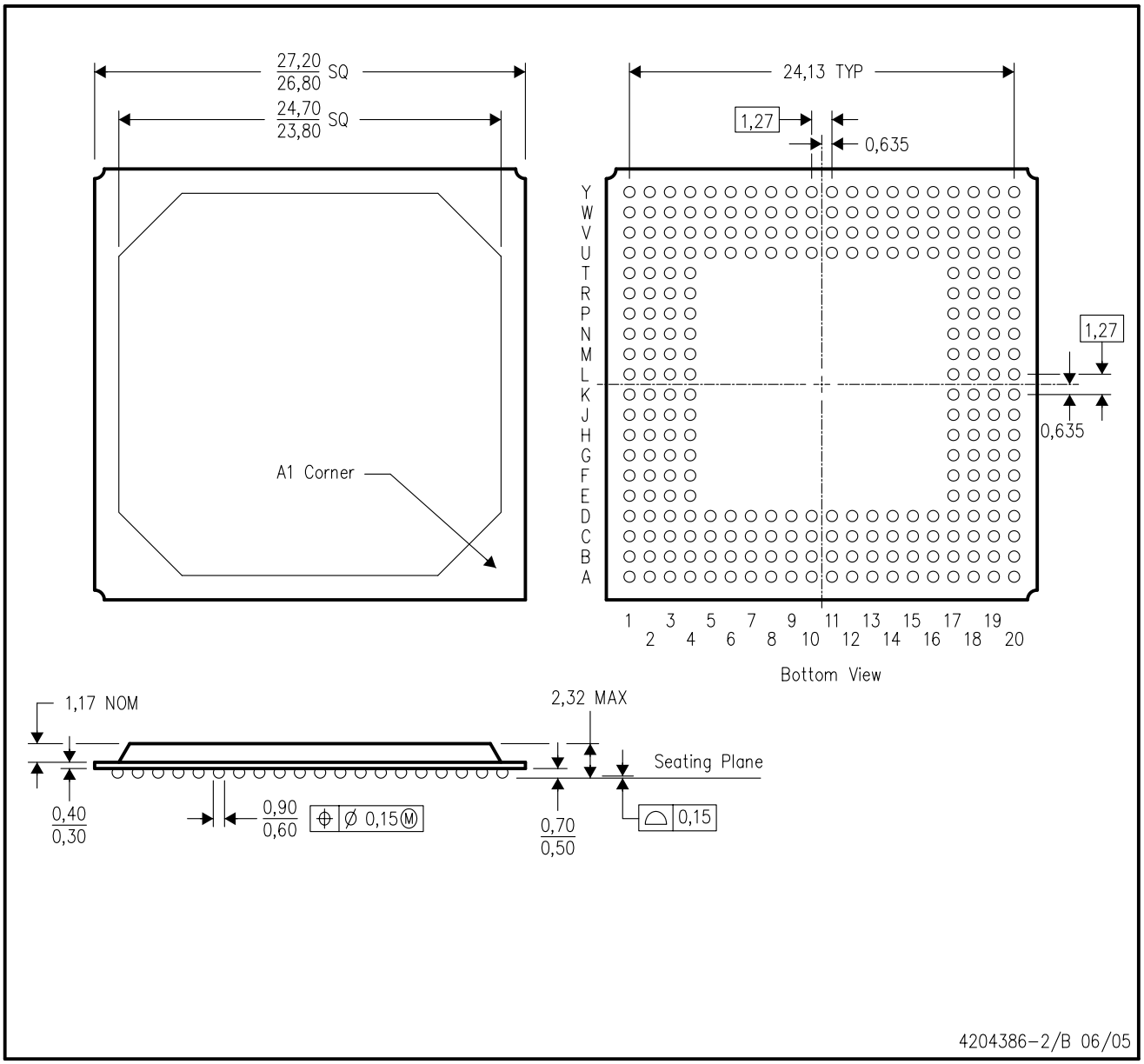

NOTES:
A. All linear dimensions are in millimeters.
B. This drawing is subject to change without notice.
C. Falls within JEDEC MO–151
D. This package is a lead–free solder ball design.

IMPORTANT NOTICE

Texas Instruments Incorporated and its subsidiaries (TI) reserve the right to make corrections, modifications, enhancements, improvements, and other changes to its products and services at any time and to discontinue any product or service without notice. Customers should obtain the latest relevant information before placing orders and should verify that such information is current and complete. All products are sold subject to TI's terms and conditions of sale supplied at the time of order acknowledgment.

TI warrants performance of its hardware products to the specifications applicable at the time of sale in accordance with TI's standard warranty. Testing and other quality control techniques are used to the extent TI deems necessary to support this warranty. Except where mandated by government requirements, testing of all parameters of each product is not necessarily performed.

TI assumes no liability for applications assistance or customer product design. Customers are responsible for their products and applications using TI components. To minimize the risks associated with customer products and applications, customers should provide adequate design and operating safeguards.

TI does not warrant or represent that any license, either express or implied, is granted under any TI patent right, copyright, mask work right, or other TI intellectual property right relating to any combination, machine, or process in which TI products or services are used. Information published by TI regarding third-party products or services does not constitute a license from TI to use such products or services or a warranty or endorsement thereof. Use of such information may require a license from a third party under the patents or other intellectual property of the third party, or a license from TI under the patents or other intellectual property of TI.

Reproduction of TI information in TI data books or data sheets is permissible only if reproduction is without alteration and is accompanied by all associated warranties, conditions, limitations, and notices. Reproduction of this information with alteration is an unfair and deceptive business practice. TI is not responsible or liable for such altered documentation. Information of third parties may be subject to additional restrictions.

Resale of TI products or services with statements different from or beyond the parameters stated by TI for that product or service voids all express and any implied warranties for the associated TI product or service and is an unfair and deceptive business practice. TI is not responsible or liable for any such statements.

TI products are not authorized for use in safety-critical applications (such as life support) where a failure of the TI product would reasonably be expected to cause severe personal injury or death, unless officers of the parties have executed an agreement specifically governing such use. Buyers represent that they have all necessary expertise in the safety and regulatory ramifications of their applications, and acknowledge and agree that they are solely responsible for all legal, regulatory and safety-related requirements concerning their products and any use of TI products in such safety-critical applications, notwithstanding any applications-related information or support that may be provided by TI. Further, Buyers must fully indemnify TI and its representatives against any damages arising out of the use of TI products in such safety-critical applications.

TI products are neither designed nor intended for use in military/aerospace applications or environments unless the TI products are specifically designated by TI as military-grade or "enhanced plastic." Only products designated by TI as military-grade meet military specifications. Buyers acknowledge and agree that any such use of TI products which TI has not designated as military-grade is solely at the Buyer's risk, and that they are solely responsible for compliance with all legal and regulatory requirements in connection with such use.

TI products are neither designed nor intended for use in automotive applications or environments unless the specific TI products are designated by TI as compliant with ISO/TS 16949 requirements. Buyers acknowledge and agree that, if they use any non-designated products in automotive applications, TI will not be responsible for any failure to meet such requirements.

Following are URLs where you can obtain information on other Texas Instruments products and application solutions:

Products		**Applications**	
Audio	www.ti.com/audio	Communications and Telecom	www.ti.com/communications
Amplifiers	amplifier.ti.com	Computers and Peripherals	www.ti.com/computers
Data Converters	dataconverter.ti.com	Consumer Electronics	www.ti.com/consumer-apps
DLP® Products	www.dlp.com	Energy and Lighting	www.ti.com/energy
DSP	dsp.ti.com	Industrial	www.ti.com/industrial
Clocks and Timers	www.ti.com/clocks	Medical	www.ti.com/medical
Interface	interface.ti.com	Security	www.ti.com/security
Logic	logic.ti.com	Space, Avionics and Defense	www.ti.com/space-avionics-defense
Power Mgmt	power.ti.com	Transportation and Automotive	www.ti.com/automotive
Microcontrollers	microcontroller.ti.com	Video and Imaging	www.ti.com/video
RFID	www.ti-rfid.com	Wireless	www.ti.com/wireless-apps
RF/IF and ZigBee® Solutions	www.ti.com/lprf		

TI E2E Community Home Page e2e.ti.com

Mailing Address: Texas Instruments, Post Office Box 655303, Dallas, Texas 75265
Copyright © 2011, Texas Instruments Incorporated