- **High-Performance Fixed-Point Digital Signal Processors (DSPs) – TMS320C62x™**
  - **5-, 4-, 3.33-ns Instruction Cycle Time**
  - **200-, 250-, 300-MHz Clock Rate**
  - **Eight 32-Bit Instructions/Cycle**
  - **1600, 2000, 2400 MIPS**
- **C6202 and C6203B GLS Ball Grid Array (BGA) Packages are Pin-Compatible With the C6204 GLW BGA Package†**
- **C6202B and C6203B GNZ and GNY Packages are Pin-Compatible**
- **VelociTI™ Advanced Very-Long-Instruction-Word (VLIW) C62x™ DSP Core**
  - **Eight Highly Independent Functional Units:**
    - **Six ALUs (32-/40-Bit)**
    - **Two 16-Bit Multipliers (32-Bit Result)**
  - **Load-Store Architecture With 32 32-Bit General-Purpose Registers**
  - **Instruction Packing Reduces Code Size**
  - **All Instructions Conditional**
- **Instruction Set Features**
  - **Byte-Addressable (8-, 16-, 32-Bit Data)**
  - **8-Bit Overflow Protection**
  - **Saturation**
  - **Bit-Field Extract, Set, Clear**
  - **Bit-Counting**
  - **Normalization**
- **3M-Bit On-Chip SRAM**
  - **2M-Bit Internal Program/Cache (64K 32-Bit Instructions)**
  - **1M-Bit Dual-Access Internal Data (128K Bytes)**
    - **Organized as Two 64K-Byte Blocks for Improved Concurrency**
- **32-Bit External Memory Interface (EMIF)**
  - **Glueless Interface to Synchronous Memories: SDRAM or SBSRAM**
  - **Glueless Interface to Asynchronous Memories: SRAM and EPROM**
  - **52M-Byte Addressable External Memory Space**
- **Four-Channel Bootloading Direct-Memory-Access (DMA) Controller With an Auxiliary Channel**
- **Flexible Phase-Locked-Loop (PLL) Clock Generator**
- **32-Bit Expansion Bus (XBus)**
  - **Glueless/Low-Glue Interface to Popular PCI Bridge Chips**
  - **Glueless/Low-Glue Interface to Popular Synchronous or Asynchronous Microprocessor Buses**
  - **Master/Slave Functionality**
  - **Glueless Interface to Synchronous FIFOs and Asynchronous Peripherals**
- **Three Multichannel Buffered Serial Ports (McBSPs)**
  - **Direct Interface to T1/E1, MVIP, SCSA Framers**
  - **ST-Bus-Switching Compatible**
  - **Up to 256 Channels Each**
  - **AC97-Compatible**
  - **Serial-Peripheral Interface (SPI) Compatible (Motorola™)**
- **Two 32-Bit General-Purpose Timers**
- **IEEE-1149.1 (JTAG‡) Boundary-Scan-Compatible**
- **352-Pin BGA Package (GJL) (C6202)**
- **352-Pin BGA Package (GNZ) (C6202B)**
- **384-Pin BGA Package (GLS) (C6202)**
- **384-Pin BGA Package (GNY) (C6202B)**
- **0.18-μm/5-Level Metal Process (C6202)**
  **0.15-μm/5-Level Metal Process (C6202B)**
  - **CMOS Technology**
- **3.3-V I/Os, 1.8-V Internal (C6202)**
  **3.3-V I/Os, 1.5-V Internal (C6202B)**

Please be aware that an important notice concerning availability, standard warranty, and use in critical applications of Texas Instruments semiconductor products and disclaimers thereto appears at the end of this data sheet.

TMS320C62x, VelociTI, and C62x are trademarks of Texas Instruments.
Motorola is a trademark of Motorola, Inc.
Other trademarks are the property of their respective owners.

† For more details, see the GLS BGA package bottom view.
‡ IEEE Standard 1149.1-1990 Standard-Test-Access Port and Boundary Scan Architecture.

PRODUCTION DATA information is current as of publication date. Products conform to specifications per the terms of Texas Instruments standard warranty. Production processing does not necessarily include testing of all parameters.

Copyright © 2004, Texas Instruments Incorporated

**Table of Contents**

GJL, GNZ, GLS, and GNY BGA packages . . . . . 3
description . . . . . 5
device characteristics . . . . . 6
C62x device compatibility . . . . . 8
functional and CPU (DSP core) block diagram . . . . . 9
CPU (DSP core) description . . . . . 10
memory map summary . . . . . 12
peripheral register descriptions . . . . . 13
DMA synchronization events . . . . . 18
interrupt sources and interrupt selector . . . . . 19
signal groups description . . . . . 20
signal descriptions . . . . . 23
development support . . . . . 34
documentation support . . . . . 37
clock PLL . . . . . 37
power-down mode logic . . . . . 40
power-supply sequencing . . . . . 43
IEEE 1149.1 JTAG compatibility statement . . . . . 45
absolute maximum ratings over operating case temperature ranges . . . . . 46
recommended operating conditions . . . . . 46
electrical characteristics over recommended ranges of supply voltage and operating case temperature 46
parameter measurement information . . . . . 47
signal transition levels . . . . . 47
timing parameters and board routing analysis . . . . . 48
input and output clocks . . . . . 49
asynchronous memory timing . . . . . 52
synchronous-burst memory timing . . . . . 56
synchronous DRAM timing . . . . . 59
$\overline{\text{HOLD}}$/$\overline{\text{HOLDA}}$ timing . . . . . 64
reset timing . . . . . 65
external interrupt timing . . . . . 67
expansion bus synchronous FIFO timing . . . . . 68
expansion bus asynchronous peripheral timing . . . . . 70
expansion bus synchronous host-port timing . . . . . 74
expansion bus asynchronous host-port timing . . . . . 80
XHOLD/XHOLDA timing . . . . . 82
multichannel buffered serial port timing . . . . . 84
DMAC, timer, power-down timing . . . . . 96
JTAG test-port timing . . . . . 98
revision history . . . . . 99
thermal/mechanical data . . . . . 100

## GJL, GNZ, GLS, and GNY BGA packages

**GJL 352-PIN BALL GRID ARRAY (BGA) PACKAGE (BOTTOM VIEW) [C6202 only]**

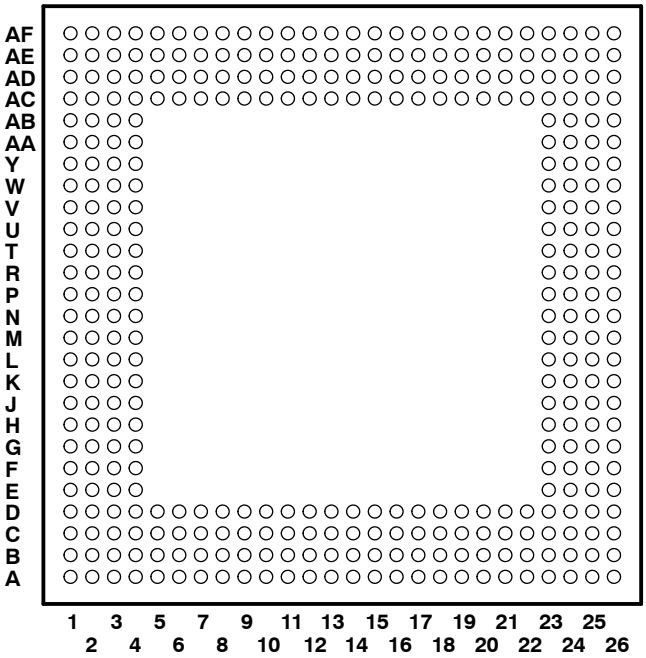

## GJL, GNZ, GLS, and GNY BGA packages (continued)

**GNZ 352-PIN BALL GRID ARRAY (BGA) PACKAGE (BOTTOM VIEW) [C6202B only]**

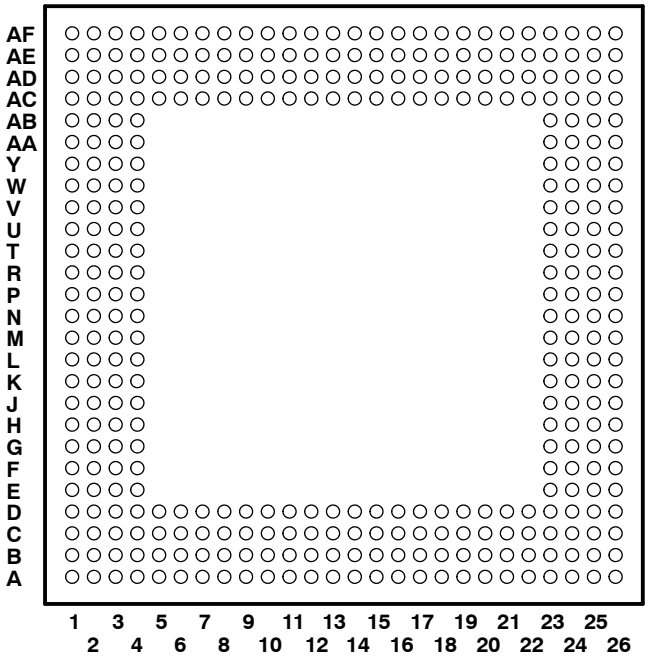


**GLS 384-PIN BGA PACKAGE (BOTTOM VIEW) [C6202 only]**

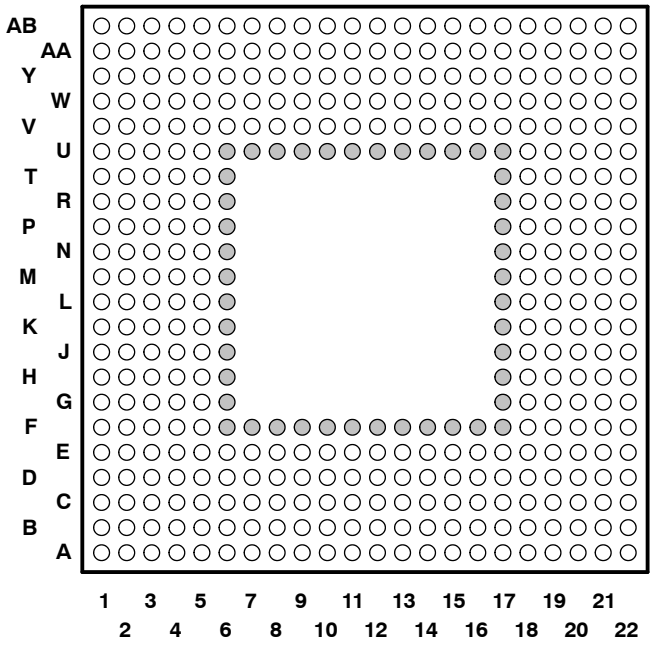


**The C6202 and C6203B GLS BGA packages are pin-compatible with the C6204 GLW package except that the inner row of balls (which are additional power and ground pins) are removed for the C6204 GLW package.**

**These balls are *NOT* applicable for the C6204 devices 340-pin GLW BGA package.**

## GJL, GNZ, GLS, and GNY BGA packages (continued)

**GNY 384-PIN BGA PACKAGE (BOTTOM VIEW) [C6202B only]**

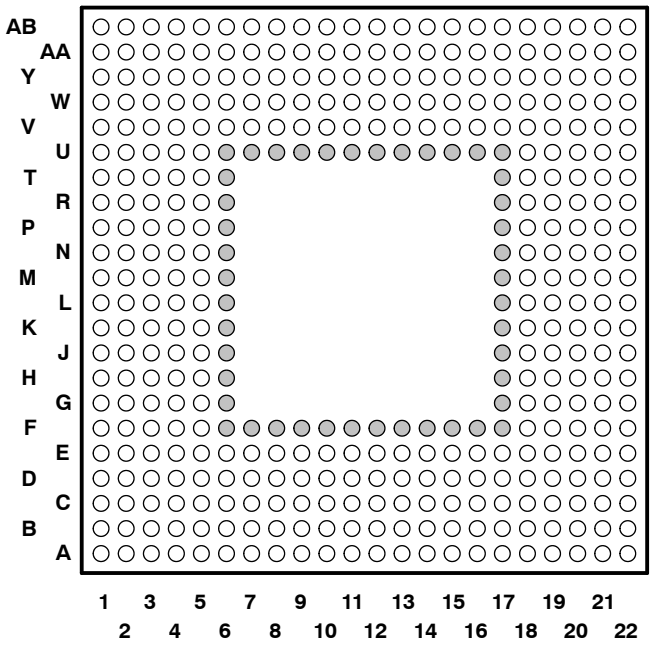


## description

The TMS320C6202 and TMS320C6202B devices are part of the TMS320C62x™ fixed-point DSP generation in the TMS320C6000™ DSP platform. The C62x™ DSP devices are based on the high-performance, advanced VelociTI™ very-long-instruction-word (VLIW) architecture developed by Texas Instruments (TI), making these DSPs an excellent choice for multichannel and multifunction applications.

The TMS320C62x™ DSP offers cost-effective solutions to high-performance DSP-programming challenges. The TMS320C6202/02B has a performance capability of up to 2400 million instructions per second (MIPS) at 300 MHz. The C6202/02B DSP possesses the operational flexibility of high-speed controllers and the numerical capability of array processors. These processors have 32 general-purpose registers of 32-bit word length and eight highly independent functional units. The eight functional units provide six arithmetic logic units (ALUs) for a high degree of parallelism and two 16-bit multipliers for a 32-bit result. The C6202/02B can produce two multiply-accumulates (MACs) per cycle. This gives a total of 600 million MACs per second (MMACS) for the C6202/02B device. The C6202/02B DSP also has application-specific hardware logic, on-chip memory, and additional on-chip peripherals.

The C6202/02B devices program memory consists of two blocks, with a 128K-byte block configured as memory-mapped program space, and the other 128K-byte block user-configurable as cache or memory-mapped program space. Data memory for the C6202/02B consists of two 64K-byte blocks of RAM.

TMS320C6000 is a trademark of Texas Instruments.

## description (continued)

The C6202/02B device has a powerful and diverse set of peripherals. The peripheral set includes three multichannel buffered serial ports (McBSPs), two general-purpose timers, a 32-bit expansion bus (XBus) that offers ease of interface to synchronous or asynchronous industry-standard host bus protocols, and a glueless 32-bit external memory interface (EMIF) capable of interfacing to SDRAM or SBSRAM and asynchronous peripherals.

The C62x™ devices have a complete set of development tools which includes: a new C compiler, an assembly optimizer to simplify programming and scheduling, and a Windows™ debugger interface for visibility into source code execution.

## device characteristics

Table 1 provides an overview of the TMS320C6202, TMS320C6202B, TMS320C6203B, and the TMS320C6204 pin-compatible DSPs. The table shows significant features of each device, including the capacity of on-chip RAM, the peripherals, the execution time, and the package type with pin count, etc. This data sheet primarily focuses on the functionality of the TMS320C6202/02B devices although it also identifies to the user the pin-compatibility of the C6202 and C6203B GLS, and the C6204 GLW BGA packages. This data sheet also identifies the pin-compatibility of the C6202B and the C6203B GNZ and GNY packages. For the functionality information on the TMS320C6203B device, see the *TMS320C6203B Fixed-Point Digital Signal Processor* data sheet (literature number SPRS086). For the functionality information on the TMS320C6204 device, see the *TMS320C6204 Fixed-Point Digital Signal Processor* data sheet (literature number SPRS152). And for more details on the C6000™ DSP device part numbers and part numbering, see Table 16 and Figure 4.

C6000 is a trademark of Texas Instruments.
Windows is a registered trademark of the Microsoft Corporation.

## device characteristics (continued)

### Table 1. Characteristics of the Pin-Compatible DSPs

| HARDWARE FEATURES | | C6202 | C6202B | C6203B | C6204 |
|---|---|---|---|---|---|
| Peripherals | EMIF | √ | √ | √ | √ |
| | DMA | 4-Channel | 4-Channel With Throughput Enhancements | 4-Channel With Throughput Enhancements | 4-Channel With Throughput Enhancements |
| | Expansion Bus | √ | √ | √ | √ |
| | McBSPs | 3 | 3 | 3 | 2 |
| | 32-Bit Timers | 2 | 2 | 2 | 2 |
| Internal Program Memory | Size (Bytes) | 256K | 256K | 384K | 64K |
| | Organization | Block 0: 128K-Byte Mapped Program Block 1: 128K-Byte Cache/Mapped Program | Block 0: 128K-Byte Mapped Program Block 1: 128K-Byte Cache/Mapped Program | Block 0: 256K-Byte Mapped Program Block 1: 128K-Byte Cache/Mapped Program | 1 Block: 64K-Byte Cache/Mapped Program |
| Internal Data Memory | Size (Bytes) | 128K | 128K | 512K | 64K |
| | Organization | 2 Blocks: Four 16-Bit Banks per Block 50/50 Split | 2 Blocks: Four 16-Bit Banks per Block 50/50 Split | 2 Blocks: Four 16-Bit Banks per Block 50/50 Split | 2 Blocks: Four 16-Bit Banks per Block 50/50 Split |
| CPU ID + CPU Rev ID | Control Status Register (CSR.[31:16]) | 0x0002 | 0x0003 | 0x0003 | 0x0003 |
| Frequency | MHz | 200, 250 | 250, 300 | 250, 300 | 200 |
| Cycle Time | ns | 4 ns (6202-250) 5 ns (6202-200) | 3.33 ns (6202B-300) 4 ns (6202B-250) 4 ns (02BGNZA-250) | 3.33 ns (6203B-300) 4 ns (6203B-250) 4 ns (03BGNZA-250) | 5 ns (6204-200) |
| Voltage | Core (V) | 1.8 | 1.5 | 1.5<br>1.7 | 1.5 |
| | I/O (V) | 3.3 | 3.3 | 3.3 | 3.3 |
| PLL Options | CLKIN frequency multiplier [Bypass (x1), x4, x6, x7, x8, x9, x10, and x11] | x1, x4 (Both Pkgs) | All PLL Options (GNY Pkg)<br>x1, x4, x8, x10 (GNZ Pkg) | All PLL Options (GLS/GNY Pkgs)<br>x1, x4, x8, x10 (GNZ Pkg) | x1, x4 (Both Pkgs) |
| BGA Packages | 27 x 27 mm | 352-pin GJL | 352-pin GNZ | 352-pin GNZ | – |
| | 18 x 18 mm | 384-pin GLS | – | 384-pin GLS | 340-pin GLW |
| | 18 x 18 mm | – | 384-pin GNY | 384-pin GNY (2.x, 3.x only) | – |
| | 16 x 16 mm | – | – | – | 288-pin GHK |
| Process Technology | μm | 0.18 μm | 0.15 μm | 0.15 μm | 0.15 μm |
| Product Status† | Product Preview (PP) Advance Information (AI) Production Data (PD) | PD | PD | PD | PD |

† PRODUCTION DATA information is current as of publication date. Products conform to specifications per the terms of Texas Instruments standard warranty. Production processing does not necessarily include testing of all parameters.

## C62x™ device compatibility

The TMS320C6202, C6202B, C6203B, and C6204 devices are pin-compatible; thus, making new system designs easier and providing faster time to market. The following list summarizes the C62x DSP device characteristic differences:

- Core Supply Voltage (1.8 V versus 1.7 V versus 1.5 V)

  The C6202 device core supply voltage is 1.8 V while the C6202B, C6203B, C6204 devices have core supply voltages of 1.5 V. Furthermore, the C6203B-300 speed devices (GNY and GNZ packages) also have a 1.7-V core supply voltage.

- Device Clock Speeds

  The C6202B and C6203B devices run at –250 and –300 MHz clock speeds (with a C620xBGNZA extended temperature device that also runs at –250 MHz), while the C6202 device runs at –200 and –250 MHz, and the C6204 device runs at –200 MHz clock speed.

- PLL Options Availability

  Table 1 identifies the available PLL multiply factors [e.g., CLKIN x1 (PLL bypassed), x4, etc.] for each of the C62x DSP devices. For additional details on the PLL clock module and specific options for the C6202/02B devices, see the Clock PLL section of this data sheet.

  For additional details on the PLL clock module and specific options for the C6203B device, see the Clock PLL section of the *TMS320C6203B Fixed-Point Digital Signal Processor Data Sheet* (literature number SPRS086).

  And for additional details on the PLL clock module and specific options for the C6204 device, see the *Clock PLL* section of the *TMS320C6204 Fixed-Point Digital Signal Processor Data Sheet* (literature number SPRS152).

- On-Chip Memory Size

  The C6202/02B, C6203B, and C6204 devices have different on-chip program memory and data memory sizes (see Table 1).

- McBSPs

  The C6202, C6202B, and C6203B devices have three McBSPs while the C6204 device has two McBSPs on-chip.

For a more detailed discussion on migration concerns, and similarities/differences between the C6202, C6202B, C6203B, and C6204 devices, see the *How to Begin Development Today and Migrate Across the TMS320C6202/02B/03B/04 DSPs Application Report* (literature number SPRA603).

## functional and CPU (DSP core) block diagram

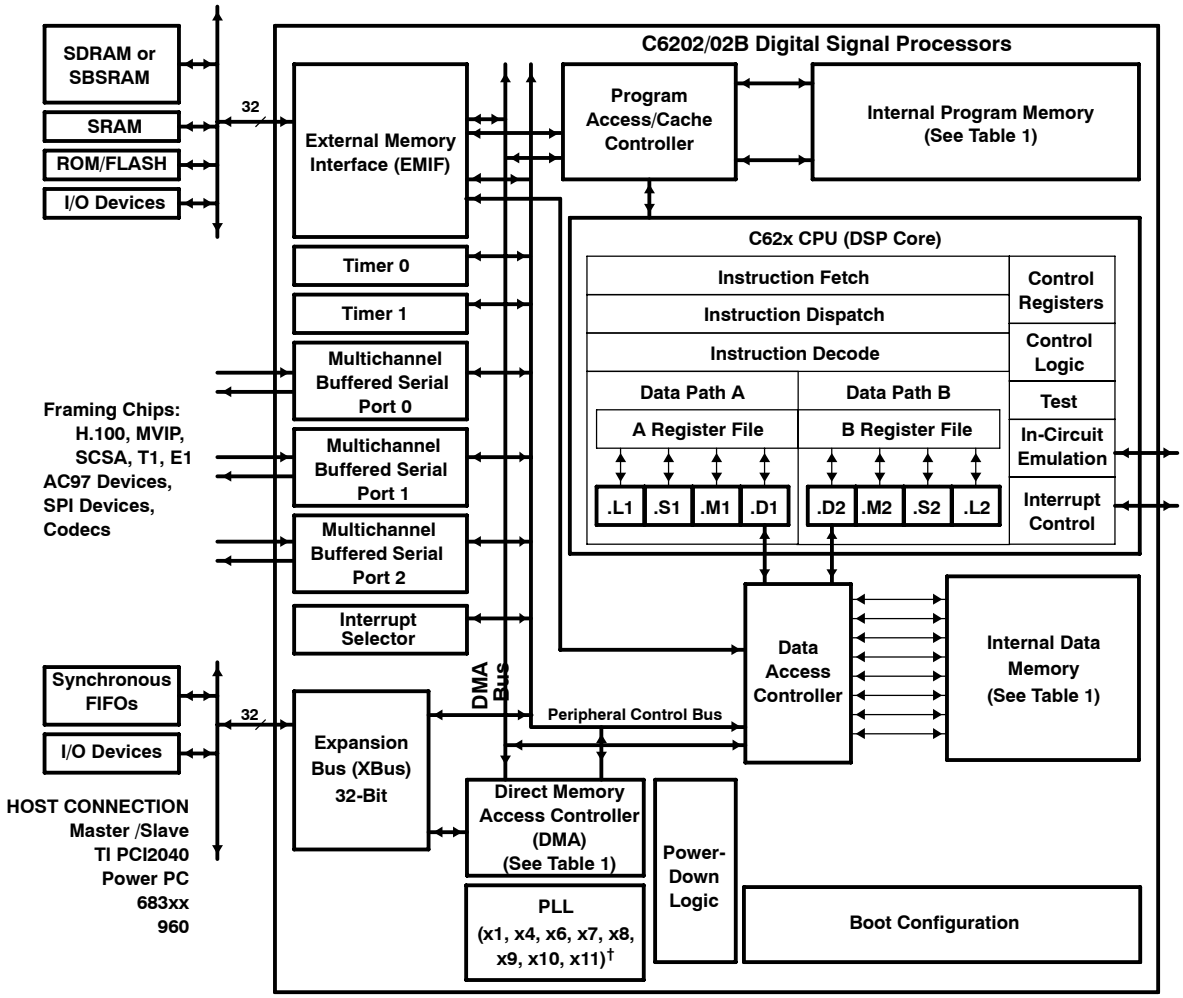


† For additional details on the PLL clock module and specific options for the C6202/02B devices, see Table 1 and the Clock PLL section of this data sheet.

## CPU (DSP core) description

The CPU fetches VelociTI advanced very-long instruction words (VLIW) (256 bits wide) to supply up to eight 32-bit instructions to the eight functional units during every clock cycle. The VelociTI VLIW architecture features controls by which all eight units do not have to be supplied with instructions if they are not ready to execute. The first bit of every 32-bit instruction determines if the next instruction belongs to the same execute packet as the previous instruction, or whether it should be executed in the following clock as a part of the next execute packet. Fetch packets are always 256 bits wide; however, the execute packets can vary in size. The variable-length execute packets are a key memory-saving feature, distinguishing the C62x CPU from other VLIW architectures.

The CPU features two sets of functional units. Each set contains four units and a register file. One set contains functional units .L1, .S1, .M1, and .D1; the other set contains units .D2, .M2, .S2, and .L2. The two register files each contain 16 32-bit registers for a total of 32 general-purpose registers. The two sets of functional units, along with two register files, compose sides A and B of the CPU [see the functional and CPU (DSP core) block diagram and Figure 1]. The four functional units on each side of the CPU can freely share the 16 registers belonging to that side. Additionally, each side features a single data bus connected to all the registers on the other side, by which the two sets of functional units can access data from the register files on the opposite side. While register access by functional units on the same side of the CPU as the register file can service all the units in a single clock cycle, register access using the register file across the CPU supports one read and one write per cycle.

Another key feature of the C62x CPU is the load/store architecture, where all instructions operate on registers (as opposed to data in memory). Two sets of data-addressing units (.D1 and .D2) are responsible for all data transfers between the register files and the memory. The data address driven by the .D units allows data addresses generated from one register file to be used to load or store data to or from the other register file. The C62x CPU supports a variety of indirect addressing modes using either linear- or circular-addressing modes with 5- or 15-bit offsets. All instructions are conditional, and most can access any one of the 32 registers. Some registers, however, are singled out to support specific addressing or to hold the condition for conditional instructions (if the condition is not automatically “true”). The two .M functional units are dedicated for multiplies. The two .S and .L functional units perform a general set of arithmetic, logical, and branch functions with results available every clock cycle.

The processing flow begins when a 256-bit-wide instruction fetch packet is fetched from a program memory. The 32-bit instructions destined for the individual functional units are “linked” together by “1” bits in the least significant bit (LSB) position of the instructions. The instructions that are “chained” together for simultaneous execution (up to eight in total) compose an execute packet. A “0” in the LSB of an instruction breaks the chain, effectively placing the instructions that follow it in the next execute packet. If an execute packet crosses the 256-bit-wide fetch-packet boundary, the assembler places it in the next fetch packet, while the remainder of the current fetch packet is padded with NOP instructions. The number of execute packets within a fetch packet can vary from one to eight. Execute packets are dispatched to their respective functional units at the rate of one per clock cycle and the next 256-bit fetch packet is not fetched until all the execute packets from the current fetch packet have been dispatched. After decoding, the instructions simultaneously drive all active functional units for a maximum execution rate of eight instructions every clock cycle. While most results are stored in 32-bit registers, they can be subsequently moved to memory as bytes or half-words as well. All load and store instructions are byte-, half-word, or word-addressable.

## CPU (DSP core) description (continued)

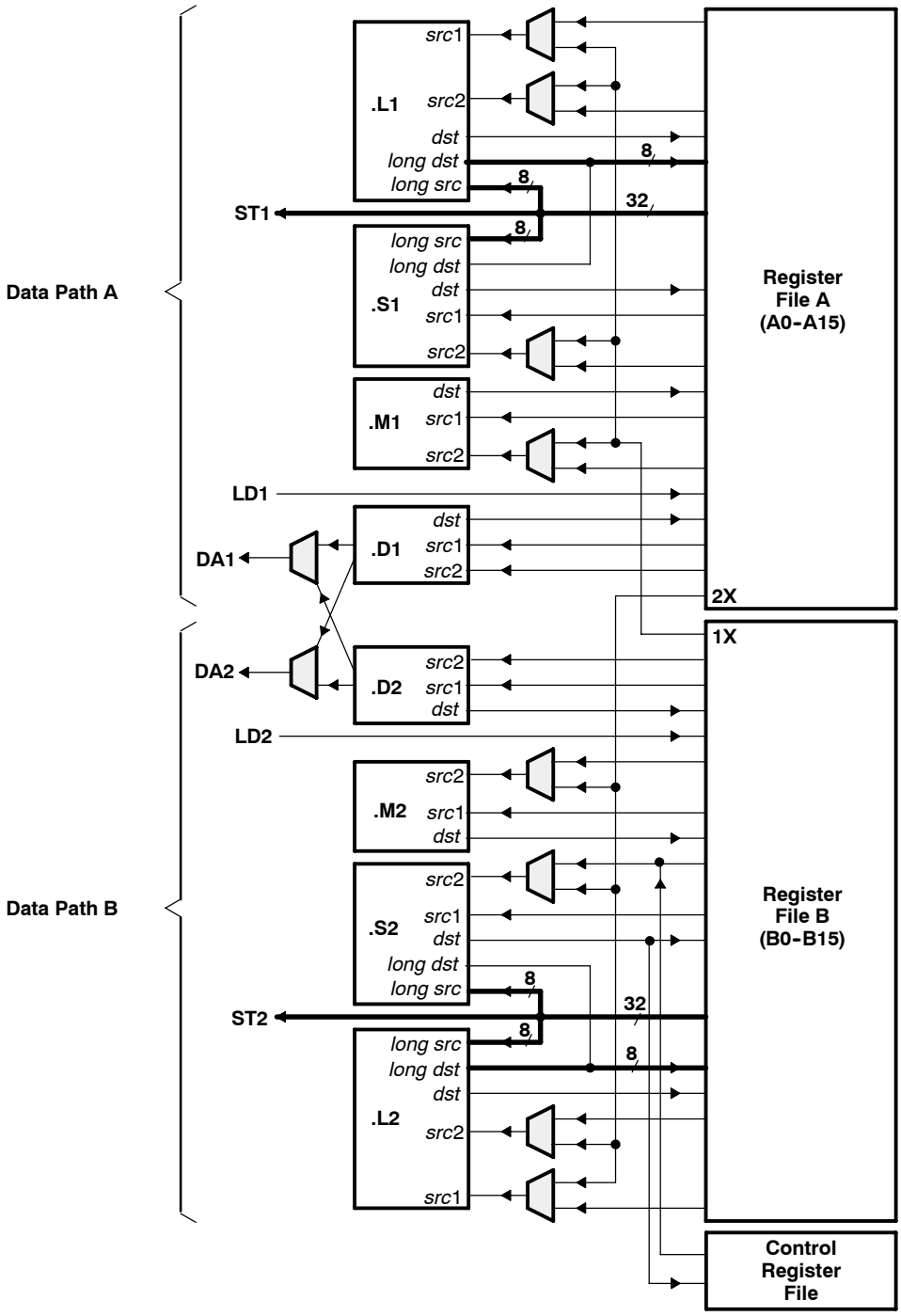


**Figure 1. TMS320C62x CPU (DSP Core) Data Paths**

## memory map summary

Table 2 shows the memory map address ranges of the C6202/02B device. The C6202/02B device has the capability of a MAP 0 or MAP 1 memory block configuration. These memory block configurations are set up at reset by the boot configuration pins (generically called BOOTMODE[4:0]). For the C6202/02B device, the BOOTMODE configuration is handled, at reset, by the expansion bus module (specifically XD[4:0] pins). For more detailed information on the C6202/02B device settings, which include the device boot mode configuration at reset and other device-specific configurations, see *TMS320C620x/C670x DSP Boot Modes and Configuration* (literature number SPRU642).

**Table 2. TMS320C6202/02B Memory Map Summary**

| MEMORY BLOCK DESCRIPTION | | BLOCK SIZE (BYTES) | HEX ADDRESS RANGE |
|---|---|---|---|
| MAP 0 | MAP 1 | | |
| External Memory Interface (EMIF) CE0 | Internal Program RAM | 256K | 0000_0000–0003_FFFF |
| EMIF CE0 | Reserved | 4M–256K | 0004_0000–003F_FFFF |
| EMIF CE0 | EMIF CE0 | 12M | 0040_0000–00FF_FFFF |
| EMIF CE1 | EMIF CE0 | 4M | 0100_0000–013F_FFFF |
| Internal Program RAM | EMIF CE1 | 256K | 0140_0000–0143_FFFF |
| Reserved | EMIF CE1 | 4M–256K | 0144_0000–017F_FFFF |
| EMIF Registers | | 256K | 0180_0000–0183_FFFF |
| DMA Controller Registers | | 256K | 0184_0000–0187_FFFF |
| Expansion Bus (XBus) Registers | | 256K | 0188_0000–018B_FFFF |
| McBSP 0 Registers | | 256K | 018C_0000–018F_FFFF |
| McBSP 1 Registers | | 256K | 0190_0000–0193_FFFF |
| Timer 0 Registers | | 256K | 0194_0000–0197_FFFF |
| Timer 1 Registers | | 256K | 0198_0000–019B_FFFF |
| Interrupt Selector Registers | | 512 | 019C_0000–019C_01FF |
| Power-Down Registers | | 256K–512 | 019C_0200–019F_FFFF |
| Reserved | | 256K | 01A0_0000–01A3_FFFF |
| McBSP 2 Registers | | 256K | 01A4_0000–01A7_FFFF |
| Reserved | | 5.5M | 01A8_0000–01FF_FFFF |
| EMIF CE2 | | 16M | 0200_0000–02FF_FFFF |
| EMIF CE3 | | 16M | 0300_0000–03FF_FFFF |
| Reserved | | 1G–64M | 0400_0000–3FFF_FFFF |
| XBus XCE0 | | 256M | 4000_0000–4FFF_FFFF |
| XBus XCE1 | | 256M | 5000_0000–5FFF_FFFF |
| XBus XCE2 | | 256M | 6000_0000–6FFF_FFFF |
| XBus XCE3 | | 256M | 7000_0000–7FFF_FFFF |
| Internal Data RAM | | 128K | 8000_0000–8001_FFFF |
| Reserved | | 2G–128K | 8002_0000–FFFF_FFFF |

## peripheral register descriptions

Table 3 through Table 13 identify the peripheral registers for the C6202/02B device by their register names, acronyms, and hex address or hex address range. For more detailed information on the register contents, bit names, and their descriptions, see the peripheral reference guide referenced in *TMS320C6000 DSP Peripherals Overview Reference Guide* (literature number SPRU190).

**Table 3. EMIF Registers**

| HEX ADDRESS RANGE | ACRONYM | REGISTER NAME | COMMENTS |
|---|---|---|---|
| 0180 0000 | GBLCTL | EMIF global control | |
| 0180 0004 | CECTL1 | EMIF CE1 space control | External or internal; dependent on MAP0 or MAP1 configuration (selected by the MAP bit in the EMIF GBLCTL register) |
| 0180 0008 | CECTL0 | EMIF CE0 space control | External or internal; dependent on MAP0 or MAP1 configuration (selected by the MAP bit in the EMIF GBLCTL register) |
| 0180 000C | – | Reserved | |
| 0180 0010 | CECTL2 | EMIF CE2 space control | Corresponds to EMIF CE2 memory space: [0200 0000–02FF FFFF] |
| 0180 0014 | CECTL3 | EMIF CE3 space control | Correspond to EMIF CE3 memory space: [0300 0000–03FF FFFF] |
| 0180 0018 | SDCTL | EMIF SDRAM control | |
| 0180 001C | SDTIM | EMIF SDRAM refresh control | |
| 0180 0020 – 0180 0054 | — | Reserved | |
| 0180 0058 – 0183 FFFF | — | Reserved | |

**Table 4. DMA Registers**

| HEX ADDRESS RANGE | ACRONYM | REGISTER NAME |
|---|---|---|
| 0184 0000 | PRICTL0 | DMA channel 0 primary control |
| 0184 0004 | PRICTL2 | DMA channel 2 primary control |
| 0184 0008 | SECCTL0 | DMA channel 0 secondary control |
| 0184 000C | SECCTL2 | DMA channel 2 secondary control |
| 0184 0010 | SRC0 | DMA channel 0 source address |
| 0184 0014 | SRC2 | DMA channel 2 source address |
| 0184 0018 | DST0 | DMA channel 0 destination address |
| 0184 001C | DST2 | DMA channel 2 destination address |
| 0184 0020 | XFRCNT0 | DMA channel 0 transfer counter |
| 0184 0024 | XFRCNT2 | DMA channel 2 transfer counter |
| 0184 0028 | GBLCNTA | DMA global count reload register A |
| 0184 002C | GBLCNTB | DMA global count reload register B |
| 0184 0030 | GBLIDXA | DMA global index register A |
| 0184 0034 | GBLIDXB | DMA global index register B |
| 0184 0038 | GBLADDRA | DMA global address register A |
| 0184 003C | GBLADDRB | DMA global address register B |
| 0184 0040 | PRICTL1 | DMA channel 1 primary control |
| 0184 0044 | PRICTL3 | DMA channel 3 primary control |

## peripheral register descriptions (continued)

### Table 4. DMA Registers (Continued)

| HEX ADDRESS RANGE | ACRONYM | REGISTER NAME |
|---|---|---|
| 0184 0048 | SECCTL1 | DMA channel 1 secondary control |
| 0184 004C | SECCTL3 | DMA channel 3 secondary control |
| 0184 0050 | SRC1 | DMA channel 1 source address |
| 0184 0054 | SRC3 | DMA channel 3 source address |
| 0184 0058 | DST1 | DMA channel 1 destination address |
| 0184 005C | DST3 | DMA channel 3 destination address |
| 0184 0060 | XFRCNT1 | DMA channel 1 transfer counter |
| 0184 0064 | XFRCNT3 | DMA channel 3 transfer counter |
| 0184 0068 | GBLADDRC | DMA global address register C |
| 0184 006C | GBLADDRD | DMA global address register D |
| 0184 0070 | AUXCTL | DMA auxiliary control register |
| 0184 0074–0187 FFFF | — | Reserved |

### Table 5. Expansion Bus (XBUS) Registers

| HEX ADDRESS RANGE | ACRONYM | REGISTER NAME | COMMENTS |
|---|---|---|---|
| 0188 0000 | XBGC | Expansion bus global control register | |
| 0188 0004 | XCECTL1 | XCE1 space control register | Corresponds to XBus XCE0 memory space: [4000 0000–4FFF FFFF] |
| 0188 0008 | XCECTL0 | XCE0 space control register | Corresponds to XBus XCE1 memory space: [5000 0000–5FFF FFFF] |
| 0188 000C | XBHC | Expansion bus host port interface control register | DSP read/write access only |
| 0188 0010 | XCECTL2 | XCE2 space control register | Corresponds to XBus XCE2 memory space: [6000 0000–6FFF FFFF] |
| 0188 0014 | XCECTL3 | XCE3 space control register | Corresponds to XBus XCE3 memory space: [7000 0000–7FFF FFFF] |
| 0188 0018 | — | Reserved | |
| 0188 001C | — | Reserved | |
| 0188 0020 | XBIMA | Expansion bus internal master address register | DSP read/write access only |
| 0188 0024 | XBEA | Expansion bus external address register | DSP read/write access only |
| 0188 0028 – 018B FFFF | — | Reserved | |
| — | XBISA | Expansion bus internal slave address | |
| — | XBD | Expansion bus data | |

## peripheral register descriptions (continued)

### Table 6. Interrupt Selector Registers

| HEX ADDRESS RANGE | ACRONYM | REGISTER NAME | COMMENTS |
|---|---|---|---|
| 019C 0000 | MUXH | Interrupt multiplexer high | Selects which interrupts drive CPU interrupts 10–15 (INT10–INT15) |
| 019C 0004 | MUXL | Interrupt multiplexer low | Selects which interrupts drive CPU interrupts 4–9 (INT04–INT09) |
| 019C 0008 | EXTPOL | External interrupt polarity | Sets the polarity of the external interrupts (EXT_INT4–EXT_INT7) |
| 019C 000C–019C 01FF | — | Reserved | |
| 019C 0200 | PDCTL | Peripheral power-down control register | |
| 019C 0204–019F FFFF | — | Reserved | |

### Table 7. Peripheral Power-Down Control Register

| HEX ADDRESS RANGE | ACRONYM | REGISTER NAME |
|---|---|---|
| 019C 0200 | PDCTL | Peripheral power-down control register |

### Table 8. McBSP 0 Registers

| HEX ADDRESS RANGE | ACRONYM | REGISTER NAME | COMMENTS |
|---|---|---|---|
| 018C 0000 | DRR0 | McBSP0 data receive register | The CPU and DMA controller can only read this register; they cannot write to it. |
| 018C 0004 | DXR0 | McBSP0 data transmit register | |
| 018C 0008 | SPCR0 | McBSP0 serial port control register | |
| 018C 000C | RCR0 | McBSP0 receive control register | |
| 018C 0010 | XCR0 | McBSP0 transmit control register | |
| 018C 0014 | SRGR0 | McBSP0 sample rate generator register | |
| 018C 0018 | MCR0 | McBSP0 multichannel control register | |
| 018C 001C | RCER0 | McBSP0 receive channel enable register | |
| 018C 0020 | XCER0 | McBSP0 transmit channel enable register | |
| 018C 0024 | PCR0 | McBSP0 pin control register | |
| 018C 0028–018F FFFF | — | Reserved | |

## peripheral register descriptions (continued)

### Table 9. McBSP 1 Registers

| HEX ADDRESS RANGE | ACRONYM | REGISTER NAME | COMMENTS |
|---|---|---|---|
| 0190 0000 | DRR1 | Data receive register | The CPU and DMA controller can only read this register; they cannot write to it. |
| 0190 0004 | DXR1 | McBSP1 data transmit register | |
| 0190 0008 | SPCR1 | McBSP1 serial port control register | |
| 0190 000C | RCR1 | McBSP1 receive control register | |
| 0190 0010 | XCR1 | McBSP1 transmit control register | |
| 0190 0014 | SRGR1 | McBSP1 sample rate generator register | |
| 0190 0018 | MCR1 | McBSP1 multichannel control register | |
| 0190 001C | RCER1 | McBSP1 receive channel enable register | |
| 0190 0020 | XCER1 | McBSP1 transmit channel enable register | |
| 0190 0024 | PCR1 | McBSP1 pin control register | |
| 0190 0028–0193 FFFF | — | Reserved | |

### Table 10. McBSP 1 Registers

| HEX ADDRESS RANGE | ACRONYM | REGISTER NAME | COMMENTS |
|---|---|---|---|
| 0190 0000 | DRR1 | Data receive register | The CPU and DMA controller can only read this register; they cannot write to it. |
| 0190 0004 | DXR1 | McBSP1 data transmit register | |
| 0190 0008 | SPCR1 | McBSP1 serial port control register | |
| 0190 000C | RCR1 | McBSP1 receive control register | |
| 0190 0010 | XCR1 | McBSP1 transmit control register | |
| 0190 0014 | SRGR1 | McBSP1 sample rate generator register | |
| 0190 0018 | MCR1 | McBSP1 multichannel control register | |
| 0190 001C | RCER1 | McBSP1 receive channel enable register | |
| 0190 0020 | XCER1 | McBSP1 transmit channel enable register | |
| 0190 0024 | PCR1 | McBSP1 pin control register | |
| 0190 0028–0193 FFFF | — | Reserved | |

## peripheral register descriptions (continued)

### Table 11. McBSP 2 Registers

| HEX ADDRESS RANGE | ACRONYM | REGISTER NAME | COMMENTS |
|---|---|---|---|
| 01A4 0000 | DRR2 | McBSP2 data receive register | The CPU and DMA controller can only read this register; they cannot write to it. |
| 01A4 0004 | DXR2 | McBSP2 data transmit register | |
| 01A4 0008 | SPCR2 | McBSP2 serial port control register | |
| 01A4 000C | RCR2 | McBSP2 receive control register | |
| 01A4 0010 | XCR2 | McBSP2 transmit control register | |
| 01A4 0014 | SRGR2 | McBSP2 sample rate generator register | |
| 01A4 0018 | MCR2 | McBSP2 multichannel control register | |
| 01A4 001C | RCER2 | McBSP2 receive channel enable register | |
| 01A4 0020 | XCER2 | McBSP2 transmit channel enable register | |
| 01A4 0024 | PCR2 | McBSP2 pin control register | |
| 01A4 0028–01A7 FFFF | — | Reserved | |

### Table 12. Timer 0 Registers

| HEX ADDRESS RANGE | ACRONYM | REGISTER NAME | COMMENTS |
|---|---|---|---|
| 0194 0000 | CTL0 | Timer 0 control register | Determines the operating mode of the timer, monitors the timer status, and controls the function of the TOUT pin. |
| 0194 0004 | PRD0 | Timer 0 period register | Contains the number of timer input clock cycles to count. This number controls the TSTAT signal frequency. |
| 0194 0008 | CNT0 | Timer 0 counter register | Contains the current value of the incrementing counter. |
| 0194 000C–0197 FFFF | — | Reserved | |

### Table 13. Timer 1 Registers

| HEX ADDRESS RANGE | ACRONYM | REGISTER NAME | COMMENTS |
|---|---|---|---|
| 0198 0000 | CTL1 | Timer 1 control register | Determines the operating mode of the timer, monitors the timer status, and controls the function of the TOUT pin. |
| 0198 0004 | PRD1 | Timer 1 period register | Contains the number of timer input clock cycles to count. This number controls the TSTAT signal frequency. |
| 0198 0008 | CNT1 | Timer 1 counter register | Contains the current value of the incrementing counter. |
| 0198 000C–019B FFFF | — | Reserved | |

## DMA synchronization events

The C6202/C6202B DMA supports up to four independent programmable DMA channels. The four main DMA channels can be read/write synchronized based on the events shown in Table 14. Selection of these events is done via the RSYNC and WSYNC fields in the Primary Control registers of the specific DMA channel. For more detailed information on the DMA module, associated channels, and event-synchronization, see the *TMS320C620x/C670x DSP Program and Data Memory Controller / Direct Memory Access (DMA) Comtroller Reference Guide* (literature number SPRU577).

**Table 14. TMS320C6202/02B DMA Synchronization Events**

| DMA EVENT NUMBER (BINARY) | EVENT NAME | EVENT DESCRIPTION |
|---|---|---|
| 00000 | Reserved | Reserved |
| 00001 | TINT0 | Timer 0 interrupt |
| 00010 | TINT1 | Timer 1 interrupt |
| 00011 | SD_INT | EMIF SDRAM timer interrupt |
| 00100 | EXT_INT4 | External interrupt pin 4 |
| 00101 | EXT_INT5 | External interrupt pin 5 |
| 00110 | EXT_INT6 | External interrupt pin 6 |
| 00111 | EXT_INT7 | External interrupt pin 7 |
| 01000 | DMA_INT0 | DMA channel 0 interrupt |
| 01001 | DMA_INT1 | DMA channel 1 interrupt |
| 01010 | DMA_INT2 | DMA channel 2 interrupt |
| 01011 | DMA_INT3 | DMA channel 3 interrupt |
| 01100 | XEVT0 | McBSP0 transmit event |
| 01101 | REVT0 | McBSP0 receive event |
| 01110 | XEVT1 | McBSP1 transmit event |
| 01111 | REVT1 | McBSP1 receive event |
| 10000 | DSP_INT | Host processor-to-DSP interrupt |
| 10001 | XEVT2 | McBSP2 transmit event |
| 10010 | REVT2 | McBSP2 receive event |
| 10011 –11111 | Reserved | Reserved. Not used. |

## interrupt sources and interrupt selector

The C62x DSP core supports 16 prioritized interrupts, which are listed in Table 15. The highest-priority interrupt is INT_00 (dedicated to RESET) while the lowest-priority interrupt is INT_15. The first four interrupts (INT_00–INT_03) are non-maskable and fixed. The remaining interrupts (INT_04–INT_15) are maskable and default to the interrupt source specified in Table 15. The interrupt source for interrupts 4–15 can be programmed by modifying the selector value (binary value) in the corresponding fields of the Interrupt Selector Control registers: MUXH (address 0x019C0000) and MUXL (address 0x019C0004).

**Table 15. C6202/02B DSP Interrupts**

| CPU INTERRUPT NUMBER | INTERRUPT SELECTOR CONTROL REGISTER | SELECTOR VALUE (BINARY) | INTERRUPT EVENT | INTERRUPT SOURCE |
|---|---|---|---|---|
| INT_00† | — | — | RESET | |
| INT_01† | — | — | NMI | |
| INT_02† | — | — | Reserved | Reserved. Do not use. |
| INT_03† | — | — | Reserved | Reserved. Do not use. |
| INT_04‡ | MUXL[4:0] | 00100 | EXT_INT4 | External interrupt pin 4 |
| INT_05‡ | MUXL[9:5] | 00101 | EXT_INT5 | External interrupt pin 5 |
| INT_06‡ | MUXL[14:10] | 00110 | EXT_INT6 | External interrupt pin 6 |
| INT_07‡ | MUXL[20:16] | 00111 | EXT_INT7 | External interrupt pin 7 |
| INT_08‡ | MUXL[25:21] | 01000 | DMA_INT0 | DMA channel 0 interrupt |
| INT_09‡ | MUXL[30:26] | 01001 | DMA_INT1 | DMA channel 1 interrupt |
| INT_10‡ | MUXH[4:0] | 00011 | SD_INT | EMIF SDRAM timer interrupt |
| INT_11‡ | MUXH[9:5] | 01010 | DMA_INT2 | DMA channel 2 interrupt |
| INT_12‡ | MUXH[14:10] | 01011 | DMA_INT3 | DMA channel 3 interrupt |
| INT_13‡ | MUXH[20:16] | 00000 | DSP_INT | Host-processor-to-DSP interrupt |
| INT_14‡ | MUXH[25:21] | 00001 | TINT0 | Timer 0 interrupt |
| INT_15‡ | MUXH[30:26] | 00010 | TINT1 | Timer 1 interrupt |
| — | — | 01100 | XINT0 | McBSP0 transmit interrupt |
| — | — | 01101 | RINT0 | McBSP0 receive interrupt |
| — | — | 01110 | XINT1 | McBSP1 transmit interrupt |
| — | — | 01111 | RINT1 | McBSP1 receive interrupt |
| — | — | 10000 | Reserved | Reserved. Not used. |
| — | — | 10001 | XINT2 | McBSP2 transmit interrupt |
| — | — | 10010 | RINT2 | McBSP2 receive interrupt |
| — | — | 10011 – 11111 | Reserved | Reserved. Do not use. |

† Interrupts INT_00 through INT_03 are non-maskable and fixed.

‡ Interrupts INT_04 through INT_15 are programmable by modifying the binary selector values in the Interrupt Selector Control registers fields. Table 15 shows the default interrupt sources for Interrupts INT_04 through INT_15. For more detailed information on interrupt sources and selection, see *TMS320C6000 DSP Interrupt Selector Reference Guide* (literature number SPRU646).

## signal groups description

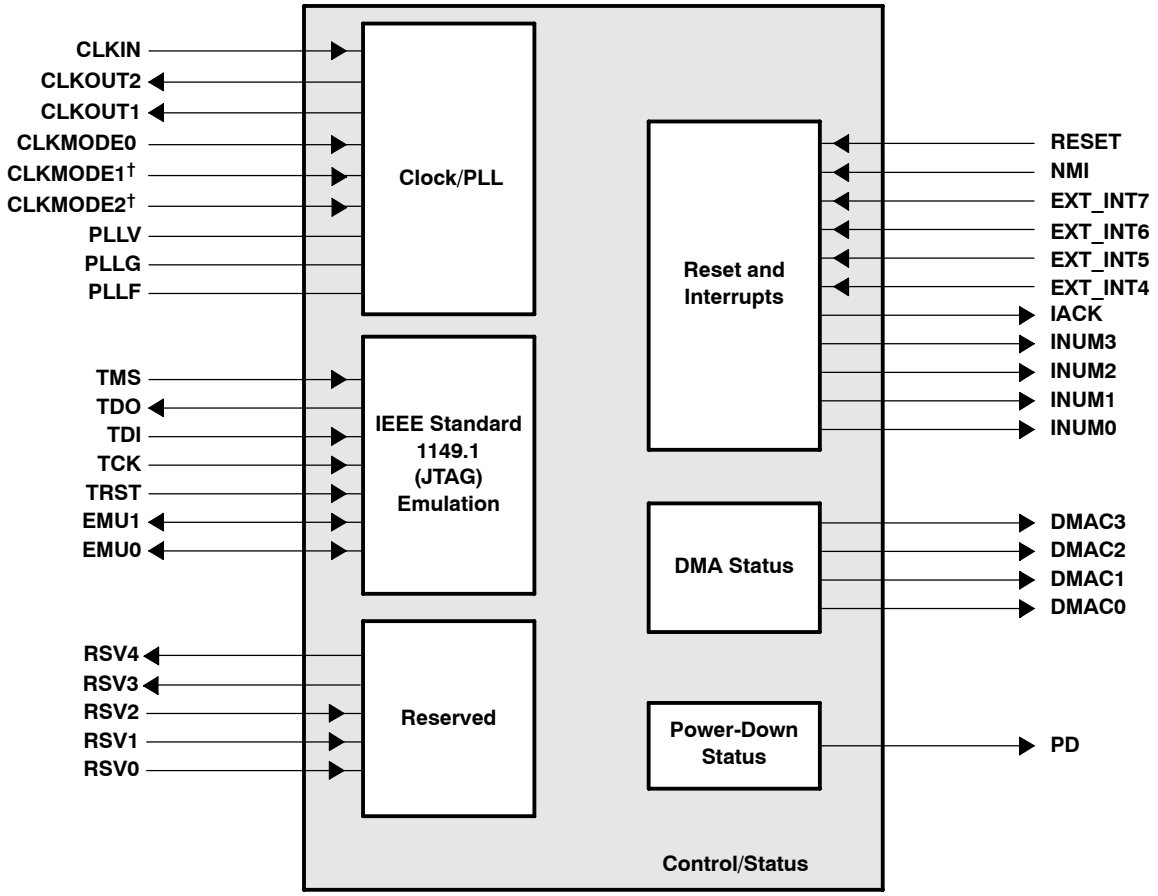


† CLKMODE1 and CLKMODE2 are NOT available on the C6202 device GJL package.
CLKMODE2 is also NOT available on the GNZ package for the C6202B device.

**Figure 2. CPU (DSP Core) Signals**

## signal groups description (continued)

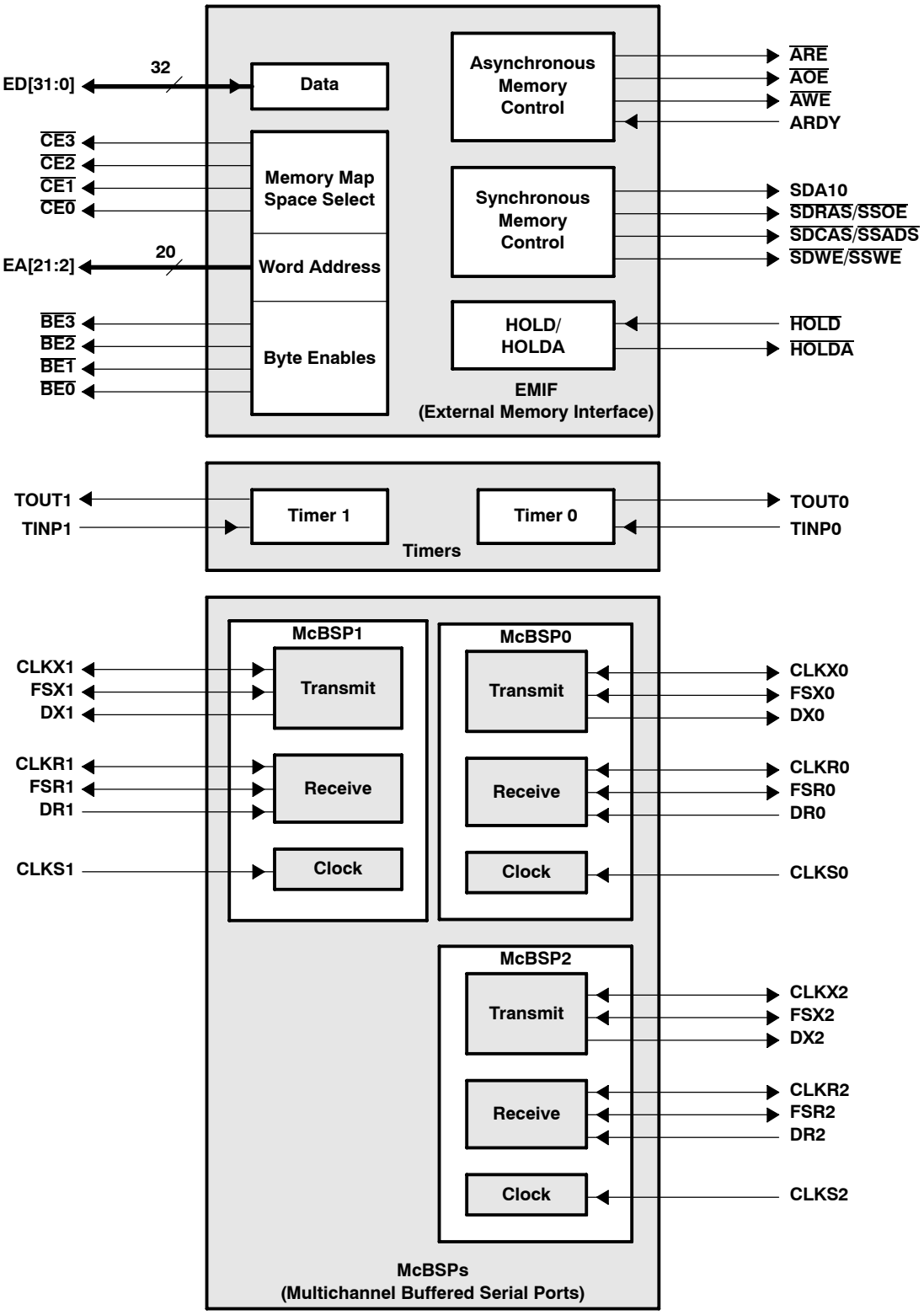


**Figure 3. Peripheral Signals**

## signal groups description (continued)

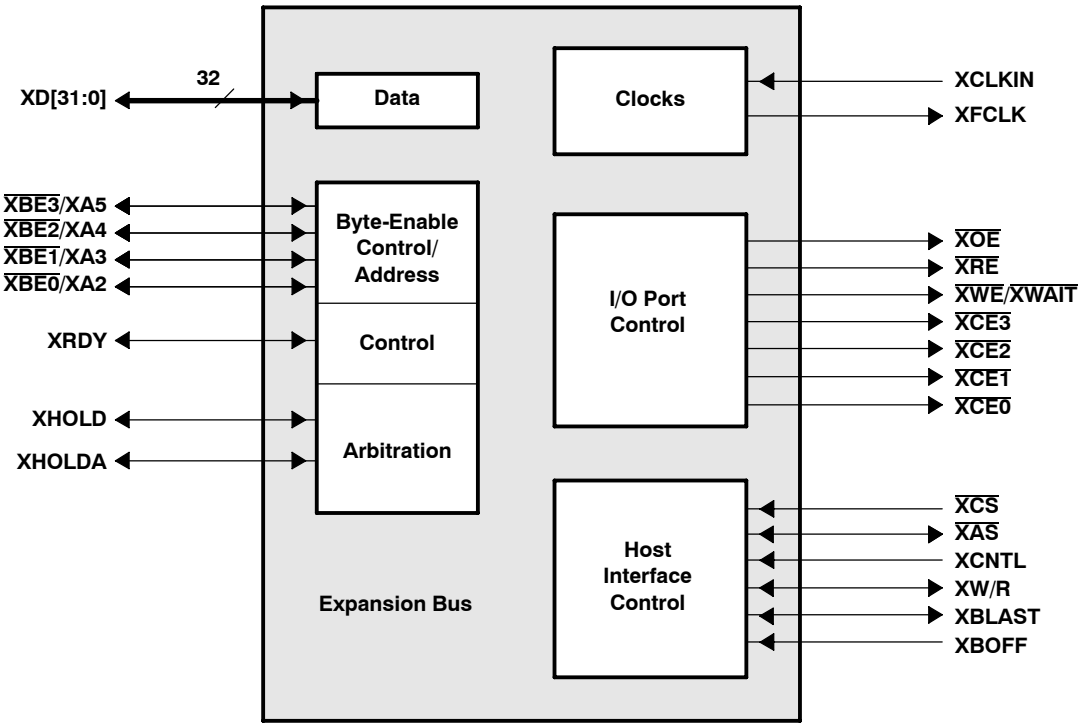


**Figure 3. Peripheral Signals (Continued)**

## Signal Descriptions

| SIGNAL NAME | PIN NO. GJL/ GNZ | PIN NO. GLS/ GNY | TYPE† | DESCRIPTION |
|---|---|---|---|---|
| **CLOCK/PLL** | | | | |
| CLKIN | C12 | B10 | I | Clock Input |
| CLKOUT1 | AD20 | Y18 | O | Clock output at full device speed |
| CLKOUT2 | AC19 | AB19 | O | Clock output at half (1/2) of device speed<br>❑ Used for synchronous memory interface |
| CLKMODE0 | B15 | B12 | I | Clock mode selects<br>❑ Selects what multiply factors of the input clock frequency the CPU frequency equals. For more details on the GJL, GNZ, GLS, and GNY CLKMODE pins and the PLL multiply factors for the C6202 and C6202B devices, see the Clock PLL section of this data sheet. |
| CLKMODE1 | C11‡ | A9§ | I | |
| CLKMODE2 | – | A14§ | I | |
| PLLV¶ | D13 | C11 | A# | PLL analog $V_{CC}$ connection for the low-pass filter |
| PLLG¶ | D14 | C12 | A# | PLL analog GND connection for the low-pass filter |
| PLLF¶ | C13 | A11 | A# | PLL low-pass filter connection to external components and a bypass capacitor |
| **JTAG EMULATION** | | | | |
| TMS | AD7 | Y5 | I | JTAG test-port mode select (features an internal pullup) |
| TDO | AE6 | AA4 | O/Z | JTAG test-port data out |
| TDI | AF5 | Y4 | I | JTAG test-port data in (features an internal pullup) |
| TCK | AE5 | AB2 | I | JTAG test-port clock |
| $\overline{\text{TRST}}$ | AC7 | AA3 | I | JTAG test-port reset (features an internal pulldown) |
| EMU1 | AF6 | AA5 | I/O/Z | Emulation pin 1, pullup with a dedicated 20-kΩ resistor‖ |
| EMU0 | AC8 | AB4 | I/O/Z | Emulation pin 0, pullup with a dedicated 20-kΩ resistor‖ |
| **RESET AND INTERRUPTS** | | | | |
| $\overline{\text{RESET}}$ | K2 | J3 | I | Device reset |
| NMI | L2 | K2 | I | Nonmaskable interrupt<br>❑ Edge-driven (rising edge) |
| EXT_INT7 | V4 | U2 | I | External interrupts<br>❑ Edge-driven<br>❑ Polarity independently selected via the external interrupt polarity register bits (EXTPOL.[3:0]) |
| EXT_INT6 | Y2 | U3 | | |
| EXT_INT5 | AA1 | W1 | | |
| EXT_INT4 | W4 | V2 | | |
| IACK | Y1 | V1 | O | Interrupt acknowledge for all active interrupts serviced by the CPU |
| INUM3 | V2 | R3 | O | Active interrupt identification number<br>❑ Valid during IACK for all active interrupts (not just external)<br>❑ Encoding order follows the interrupt-service fetch-packet ordering |
| INUM2 | U4 | T1 | | |
| INUM1 | V3 | T2 | | |
| INUM0 | W2 | T3 | | |

† I = Input, O = Output, Z = High Impedance, S = Supply Voltage, GND = Ground
‡ For the C6202 GJL package only, the C11 pin is ground ($V_{SS}$). For all C62x™ GNZ packages, the C11 pin is CLKMODE1.
§ For the C6202 GLS package, the CLKMODE2 (A14) and CLKMODE1 (A9) pins are internally unconnected.
¶ PLLV, PLLG, and PLLF are not part of external voltage supply or ground. See the Clock PLL section for information on how to connect these pins.
# A = Analog Signal (PLL Filter)
‖ For emulation and normal operation, pull up EMU1 and EMU0 with a dedicated 20-kΩ resistor. For boundary scan, pull down EMU1 and EMU0 with a dedicated 20-kΩ resistor.

## Signal Descriptions (Continued)

| SIGNAL NAME | PIN NO. GJL/ GNZ | PIN NO. GLS/ GNY | TYPE† | DESCRIPTION |
|---|---|---|---|---|
| **POWER-DOWN STATUS** | | | | |
| PD | AB2 | Y2 | O | Power-down modes 2 or 3 (active if high) |
| **EXPANSION BUS** | | | | |
| XCLKIN | A9 | C8 | I | Expansion bus synchronous host interface clock input |
| XFCLK | B9 | A8 | O | Expansion bus FIFO interface clock output |
| XD31 | D15 | C13 | I/O/Z | Expansion bus data<br>❑ Used for transfer of data, address, and control<br>❑ Also controls initialization of DSP modes and expansion bus at reset<br>[Note: For more information on pin control and boot configuration fields, see the Boot Modes and Configuration chapter of the *TMS320C6000 DSP Peripherals Overview Reference Guide* (literature number SPRU190).]<br>XD[30:16] – $\overline{\text{XCE[3:0]}}$ memory type<br>XD13 – XBLAST polarity<br>XD12 – XW/R polarity<br>XD11 – Asynchronous or synchronous host operation<br>XD10 – Arbitration mode (internal or external)<br>XD9 – FIFO mode<br>XD8 – Little endian/big endian<br>XD[4:0] – Boot mode<br>All other expansion bus data pins not listed should be pulled down. |
| XD30 | B16 | A13 | | |
| XD29 | A17 | C14 | | |
| XD28 | B17 | B14 | | |
| XD27 | D16 | B15 | | |
| XD26 | A18 | C15 | | |
| XD25 | B18 | A15 | | |
| XD24 | D17 | B16 | | |
| XD23 | C18 | C16 | | |
| XD22 | A20 | A17 | | |
| XD21 | D18 | B17 | | |
| XD20 | C19 | C17 | | |
| XD19 | A21 | B18 | | |
| XD18 | D19 | A19 | | |
| XD17 | C20 | C18 | | |
| XD16 | B21 | B19 | | |
| XD15 | A22 | C19 | | |
| XD14 | D20 | B20 | | |
| XD13 | B22 | A21 | | |
| XD12 | E25 | C21 | | |
| XD11 | F24 | D20 | | |
| XD10 | E26 | B22 | | |
| XD9 | F25 | D21 | | |
| XD8 | G24 | E20 | | |
| XD7 | H23 | E21 | | |
| XD6 | F26 | D22 | | |
| XD5 | G25 | F20 | | |
| XD4 | J23 | F21 | | |
| XD3 | G26 | E22 | | |
| XD2 | H25 | G20 | | |
| XD1 | J24 | G21 | | |
| XD0 | K23 | G22 | | |

† I = Input, O = Output, Z = High Impedance, S = Supply Voltage, GND = Ground

## Signal Descriptions (Continued)

| SIGNAL NAME | PIN NO. GJL/ GNZ | PIN NO. GLS/ GNY | TYPE† | DESCRIPTION |
|---|---|---|---|---|
| **EXPANSION BUS (CONTINUED)** | | | | |
| $\overline{XCE3}$ | F2 | D2 | O/Z | Expansion bus I/O port memory space enables<br>❑ Enabled by bits 28, 29, and 30 of the word address<br>❑ Only one asserted during any I/O port data access |
| $\overline{XCE2}$ | E1 | B1 | | |
| $\overline{XCE1}$ | F3 | D3 | | |
| $\overline{XCE0}$ | E2 | C2 | | |
| $\overline{XBE3}$/XA5 | C7 | C5 | I/O/Z | Expansion bus multiplexed byte-enable control/address signals<br>❑ Act as byte-enable for host-port operation<br>❑ Act as address for I/O port operation |
| $\overline{XBE2}$/XA4 | D8 | A4 | | |
| $\overline{XBE1}$/XA3 | A6 | B5 | | |
| $\overline{XBE0}$/XA2 | C8 | C6 | | |
| $\overline{XOE}$ | A7 | A6 | O/Z | Expansion bus I/O port output-enable |
| $\overline{XRE}$ | C9 | C7 | O/Z | Expansion bus I/O port read-enable |
| $\overline{XWE}$/$\overline{XWAIT}$ | D10 | B7 | O/Z | Expansion bus I/O port write-enable and host-port wait signals |
| $\overline{XCS}$ | A10 | C9 | I | Expansion bus host-port chip-select input |
| $\overline{XAS}$ | D9 | B6 | I/O/Z | Expansion bus host-port address strobe |
| XCNTL | B10 | B9 | I | Expansion bus host control. XCNTL selects between expansion bus address or data register. |
| XW/R | D11 | B8 | I/O/Z | Expansion bus host-port write/read-enable. XW/R polarity is selected at reset. |
| XRDY | A5 | C4 | I/O/Z | Expansion bus host-port ready (active low) and I/O port ready (active high) |
| XBLAST | B6 | B4 | I/O/Z | Expansion bus host-port burst last-polarity selected at reset |
| XBOFF | B11 | A10 | I | Expansion bus back off |
| XHOLD | B5 | A2 | I/O/Z | Expansion bus hold request |
| XHOLDA | D7 | B3 | I/O/Z | Expansion bus hold acknowledge |
| **EMIF – CONTROL SIGNALS COMMON TO ALL TYPES OF MEMORY** | | | | |
| $\overline{CE3}$ | AB25 | Y21 | O/Z | Memory space enables<br>❑ Enabled by bits 24 and 25 of the word address<br>❑ Only one asserted during any external data access |
| $\overline{CE2}$ | AA24 | W20 | | |
| $\overline{CE1}$ | AB26 | AA22 | | |
| $\overline{CE0}$ | AA25 | W21 | | |
| $\overline{BE3}$ | Y24 | V20 | O/Z | Byte-enable control<br>❑ Decoded from the two lowest bits of the internal address<br>❑ Byte-write enables for most types of memory<br>❑ Can be directly connected to SDRAM read and write mask signal (SDQM) |
| $\overline{BE2}$ | W23 | V21 | | |
| $\overline{BE1}$ | AA26 | W22 | | |
| $\overline{BE0}$ | Y25 | U20 | | |

† I = Input, O = Output, Z = High Impedance, S = Supply Voltage, GND = Ground

## Signal Descriptions (Continued)

| SIGNAL NAME | PIN NO. GJL/ GNZ | PIN NO. GLS/ GNY | TYPE† | DESCRIPTION |
|---|---|---|---|---|
| **EMIF – ADDRESS** | | | | |
| EA21 | J25 | H20 | O/Z | External address (word address) |
| EA20 | J26 | H21 | | |
| EA19 | L23 | H22 | | |
| EA18 | K25 | J20 | | |
| EA17 | L24 | J21 | | |
| EA16 | L25 | K21 | | |
| EA15 | M23 | K20 | | |
| EA14 | M24 | K22 | | |
| EA13 | M25 | L21 | | |
| EA12 | N23 | L20 | | |
| EA11 | P24 | L22 | | |
| EA10 | P23 | M20 | | |
| EA9 | R25 | M21 | | |
| EA8 | R24 | N22 | | |
| EA7 | R23 | N20 | | |
| EA6 | T25 | N21 | | |
| EA5 | T24 | P21 | | |
| EA4 | U25 | P20 | | |
| EA3 | T23 | R22 | | |
| EA2 | V26 | R21 | | |
| **EMIF – DATA** | | | | |
| ED31 | AD8 | Y6 | I/O/Z | External data |
| ED30 | AC9 | AA6 | | |
| ED29 | AF7 | AB6 | | |
| ED28 | AD9 | Y7 | | |
| ED27 | AC10 | AA7 | | |
| ED26 | AE9 | AB8 | | |
| ED25 | AF9 | Y8 | | |
| ED24 | AC11 | AA8 | | |
| ED23 | AE10 | AA9 | | |
| ED22 | AD11 | Y9 | | |
| ED21 | AE11 | AB10 | | |
| ED20 | AC12 | Y10 | | |
| ED19 | AD12 | AA10 | | |
| ED18 | AE12 | AA11 | | |
| ED17 | AC13 | Y11 | | |
| ED16 | AD14 | AB12 | | |
| ED15 | AC14 | Y12 | | |
| ED14 | AE15 | AA12 | | |

† I = Input, O = Output, Z = High Impedance, S = Supply Voltage, GND = Ground

## Signal Descriptions (Continued)

| SIGNAL NAME | PIN NO. GJL/ GNZ | PIN NO. GLS/ GNY | TYPE† | DESCRIPTION |
|---|---|---|---|---|
| **EMIF – DATA (CONTINUED)** | | | | |
| ED13 | AD15 | AA13 | I/O/Z | External data |
| ED12 | AC15 | Y13 | | |
| ED11 | AE16 | AB13 | | |
| ED10 | AD16 | Y14 | | |
| ED9 | AE17 | AA14 | | |
| ED8 | AC16 | AA15 | | |
| ED7 | AF18 | Y15 | | |
| ED6 | AE18 | AB15 | | |
| ED5 | AC17 | AA16 | | |
| ED4 | AD18 | Y16 | | |
| ED3 | AF20 | AB17 | | |
| ED2 | AC18 | AA17 | | |
| ED1 | AD19 | Y17 | | |
| ED0 | AF21 | AA18 | | |
| **EMIF – ASYNCHRONOUS MEMORY CONTROL** | | | | |
| $\overline{\text{ARE}}$ | V24 | T21 | O/Z | Asynchronous memory read-enable |
| $\overline{\text{AOE}}$ | V25 | R20 | O/Z | Asynchronous memory output-enable |
| $\overline{\text{AWE}}$ | U23 | T22 | O/Z | Asynchronous memory write-enable |
| ARDY | W25 | T20 | I | Asynchronous memory ready input |
| **EMIF – SYNCHRONOUS DRAM (SDRAM)/SYNCHRONOUS BURST SRAM (SBSRAM) CONTROL** | | | | |
| SDA10 | AE21 | AA19 | O/Z | SDRAM address 10 (separate for deactivate command) |
| $\overline{\text{SDCAS}}$/$\overline{\text{SSADS}}$ | AE22 | AB21 | O/Z | SDRAM column-address strobe/SBSRAM address strobe |
| $\overline{\text{SDRAS}}$/$\overline{\text{SSOE}}$ | AF22 | Y19 | O/Z | SDRAM row-address strobe/SBSRAM output-enable |
| $\overline{\text{SDWE}}$/$\overline{\text{SSWE}}$ | AC20 | AA20 | O/Z | SDRAM write-enable/SBSRAM write-enable |
| **EMIF – BUS ARBITRATION** | | | | |
| $\overline{\text{HOLD}}$ | Y26 | V22 | I | Hold request from the host |
| $\overline{\text{HOLDA}}$ | V23 | U21 | O | Hold-request-acknowledge to the host |
| **TIMER 0** | | | | |
| TOUT0 | F1 | D1 | O | Timer 0 or general-purpose output |
| TINP0 | H4 | E2 | I | Timer 0 or general-purpose input |
| **TIMER 1** | | | | |
| TOUT1 | J4 | F2 | O | Timer 1 or general-purpose output |
| TINP1 | G2 | F3 | I | Timer 1 or general-purpose input |
| **DMA ACTION COMPLETE STATUS** | | | | |
| DMAC3 | Y3 | V3 | O | DMA action complete |
| DMAC2 | AA2 | W2 | | |
| DMAC1 | AB1 | AA1 | | |
| DMAC0 | AA3 | W3 | | |

† I = Input, O = Output, Z = High Impedance, S = Supply Voltage, GND = Ground

## Signal Descriptions (Continued)

| SIGNAL NAME | PIN NO. GJL/ GNZ | PIN NO. GLS/ GNY | TYPE† | DESCRIPTION |
|---|---|---|---|---|
| **MULTICHANNEL BUFFERED SERIAL PORT 0 (McBSP0)** | | | | |
| CLKS0 | M4 | K3 | I | External clock source (as opposed to internal) |
| CLKR0 | M2 | L2 | I/O/Z | Receive clock |
| CLKX0 | M3 | K1 | I/O/Z | Transmit clock |
| DR0 | R2 | M2 | I | Receive data |
| DX0 | P4 | M3 | O/Z | Transmit data |
| FSR0 | N3 | M1 | I/O/Z | Receive frame sync |
| FSX0 | N4 | L3 | I/O/Z | Transmit frame sync |
| **MULTICHANNEL BUFFERED SERIAL PORT 1 (McBSP1)** | | | | |
| CLKS1 | G1 | E1 | I | External clock source (as opposed to internal) |
| CLKR1 | J3 | G2 | I/O/Z | Receive clock |
| CLKX1 | H2 | G3 | I/O/Z | Transmit clock |
| DR1 | L4 | H1 | I | Receive data |
| DX1 | J1 | H2 | O/Z | Transmit data |
| FSR1 | J2 | H3 | I/O/Z | Receive frame sync |
| FSX1 | K4 | G1 | I/O/Z | Transmit frame sync |
| **MULTICHANNEL BUFFERED SERIAL PORT 2 (McBSP2)** | | | | |
| CLKS2 | R3 | N1 | I | External clock source (as opposed to internal) |
| CLKR2 | T2 | N2 | I/O/Z | Receive clock |
| CLKX2 | R4 | N3 | I/O/Z | Transmit clock |
| DR2 | V1 | R2 | I | Receive data |
| DX2 | T4 | R1 | O/Z | Transmit data |
| FSR2 | U2 | P3 | I/O/Z | Receive frame sync |
| FSX2 | T3 | P2 | I/O/Z | Transmit frame sync |
| **RESERVED FOR TEST** | | | | |
| RSV0 | L3 | J2 | I | Reserved for testing, pullup with a dedicated 20-kΩ resistor |
| RSV1 | G3 | E3 | I | Reserved for testing, pullup with a dedicated 20-kΩ resistor |
| RSV2 | A12 | B11 | I | Reserved for testing, pullup with a dedicated 20-kΩ resistor |
| RSV3 | C15 | B13 | O | Reserved (leave unconnected, ***do not*** connect to power or ground) |
| RSV4 | D12 | C10 | O | Reserved (leave unconnected, ***do not*** connect to power or ground) |

† I = Input, O = Output, Z = High Impedance, S = Supply Voltage, GND = Ground

## Signal Descriptions (Continued)

| SIGNAL NAME | PIN NO. GJL/ GNZ | PIN NO. GLS/ GNY | TYPE† | DESCRIPTION |
|---|---|---|---|---|
| SUPPLY VOLTAGE PINS | | | | |
| $DV_{DD}$ | A11 | A3 | S | 3.3-V supply voltage (I/O) |
| | A16 | A7 | | |
| | B7 | A16 | | |
| | B8 | A20 | | |
| | B19 | D4 | | |
| | B20 | D6 | | |
| | C6 | D7 | | |
| | C10 | D9 | | |
| | C14 | D10 | | |
| | C17 | D13 | | |
| | C21 | D14 | | |
| | G4 | D16 | | |
| | G23 | D17 | | |
| | H3 | D19 | | |
| | H24 | F1 | | |
| | K3 | F4 | | |
| | K24 | F19 | | |
| | L1 | F22 | | |
| | L26 | G4 | | |
| | N24 | G19 | | |
| | P3 | J4 | | |
| | T1 | J19 | | |
| | T26 | K4 | | |
| | U3 | K19 | | |
| | U24 | L1 | | |
| | W3 | M22 | | |
| | W24 | N4 | | |
| | Y4 | N19 | | |
| | Y23 | P4 | | |
| | AD6 | P19 | | |
| | AD10 | T4 | | |
| | AD13 | T19 | | |
| | AD17 | U1 | | |
| | AD21 | U4 | | |
| | AE7 | U19 | | |
| | AE8 | U22 | | |
| | AE19 | W4 | | |
| | AE20 | W6 | | |
| | AF11 | W7 | | |

† I = Input, O = Output, Z = High Impedance, S = Supply Voltage, GND = Ground

## Signal Descriptions (Continued)

| SIGNAL NAME | PIN NO. GJL/ GNZ | PIN NO. GLS/ GNY | TYPE† | DESCRIPTION |
|---|---|---|---|---|
| **SUPPLY VOLTAGE PINS (CONTINUED)** | | | | |
| $DV_{DD}$ | AF16 | W9 | S | 3.3-V supply voltage (I/O) |
| | – | W10 | | |
| | – | W13 | | |
| | – | W14 | | |
| | – | W16 | | |
| | – | W17 | | |
| | – | W19 | | |
| | – | AB5 | | |
| | – | AB9 | | |
| | – | AB14 | | |
| | – | AB18 | | |
| $CV_{DD}$ | A1 | E7 | S | 1.5-V supply voltage (core) (C6202B only)<br>1.8-V supply voltage (core) (C6202 only) |
| | A2 | E8 | | |
| | A3 | E10 | | |
| | A24 | E11 | | |
| | A25 | E12 | | |
| | A26 | E13 | | |
| | B1 | E15 | | |
| | B2 | E16 | | |
| | B3 | F7 | | |
| | B24 | F8 | | |
| | B25 | F9 | | |
| | B26 | F11 | | |
| | C1 | F12 | | |
| | C2 | F14 | | |
| | C3 | F15 | | |
| | C4 | F16 | | |
| | C23 | G5 | | |
| | C24 | G6 | | |
| | C25 | G17 | | |
| | C26 | G18 | | |
| | D3 | H5 | | |
| | D4 | H6 | | |
| | D5 | H17 | | |
| | D22 | H18 | | |
| | D23 | J6 | | |
| | D24 | J17 | | |
| | E4 | K5 | | |
| | E23 | K18 | | |
| | AB4 | L5 | | |

† I = Input, O = Output, Z = High Impedance, S = Supply Voltage, GND = Ground

## Signal Descriptions (Continued)

| SIGNAL NAME | PIN NO. GJL/ GNZ | PIN NO. GLS/ GNY | TYPE† | DESCRIPTION |
|---|---|---|---|---|
| **SUPPLY VOLTAGE PINS (CONTINUED)** | | | | |
| $CV_{DD}$ | AB23 | L6 | S | 1.5-V supply voltage (core) (C6202B only)<br>1.8-V supply voltage (core) (C6202 only) |
| | AC3 | L17 | | |
| | AC4 | L18 | | |
| | AC5 | M5 | | |
| | AC22 | M6 | | |
| | AC23 | M17 | | |
| | AC24 | M18 | | |
| | AD1 | N5 | | |
| | AD2 | N18 | | |
| | AD3 | P6 | | |
| | AD4 | P17 | | |
| | AD23 | R5 | | |
| | AD24 | R6 | | |
| | AD25 | R17 | | |
| | AD26 | R18 | | |
| | AE1 | T5 | | |
| | AE2 | T6 | | |
| | AE3 | T17 | | |
| | AE24 | T18 | | |
| | AE25 | U7 | | |
| | AE26 | U8 | | |
| | AF1 | U9 | | |
| | AF2 | U11 | | |
| | AF3 | U12 | | |
| | AF24 | U14 | | |
| | AF25 | U15 | | |
| | AF26 | U16 | | |
| | – | V7 | | |
| | – | V8 | | |
| | – | V10 | | |
| | – | V11 | | |
| | – | V12 | | |
| | – | V13 | | |
| | – | V15 | | |
| | – | V16 | | |
| **GROUND PINS** | | | | |
| $V_{SS}$ | A4 | A1 | GND | Ground pins |
| | A8 | A5 | | |
| | A13 | A12 | | |
| | A14 | A18 | | |

† I = Input, O = Output, Z = High Impedance, S = Supply Voltage, GND = Ground

## Signal Descriptions (Continued)

| SIGNAL NAME | PIN NO. GJL/ GNZ | PIN NO. GLS/ GNY | TYPE† | DESCRIPTION |
|---|---|---|---|---|
| GROUND PINS (CONTINUED) | | | | |
| $V_{SS}$ | A15 | A22 | GND | Ground pins |
| | A19 | B2 | | |
| | A23 | B21 | | |
| | B4 | C1 | | |
| | B12 | C3 | | |
| | B13 | C20 | | |
| | B14 | C22 | | |
| | B23 | D5 | | |
| | C5 | D8 | | |
| | C11‡ | D11 | | |
| | C16 | D12 | | |
| | C22 | D15 | | |
| | D1 | D18 | | |
| | D2 | E4 | | |
| | D6 | E5 | | |
| | D21 | E6 | | |
| | D25 | E9 | | |
| | D26 | E14 | | |
| | E3 | E17 | | |
| | E24 | E18 | | |
| | F4 | E19 | | |
| | F23 | F5 | | |
| | H1 | F6 | | |
| | H26 | F10 | | |
| | K1 | F13 | | |
| | K26 | F17 | | |
| | M1 | F18 | | |
| | M26 | H4 | | |
| | N1 | H19 | | |
| | N2 | J1 | | |
| | N25 | J5 | | |
| | N26 | J18 | | |
| | P1 | J22 | | |
| | P2 | K6 | | |
| | P25 | K17 | | |
| | P26 | L4 | | |

† I = Input, O = Output, Z = High Impedance, S = Supply Voltage, GND = Ground
‡ For the C6202 GJL package only, the C11 pin is ground ($V_{SS}$). For all C62x™ GNZ packages, the C11 pin is CLKMODE1.

## Signal Descriptions (Continued)

| SIGNAL NAME | PIN NO. GJL/ GNZ | PIN NO. GLS/ GNY | TYPE† | DESCRIPTION |
|---|---|---|---|---|
| GROUND PINS (CONTINUED) | | | | |
| $V_{SS}$ | R1 | L19 | GND | Ground pins |
| | R26 | M4 | | |
| | U1 | M19 | | |
| | U26 | N6 | | |
| | W1 | N17 | | |
| | W26 | P1 | | |
| | AA4 | P5 | | |
| | AA23 | P18 | | |
| | AB3 | P22 | | |
| | AB24 | R4 | | |
| | AC1 | R19 | | |
| | AC2 | U5 | | |
| | AC6 | U6 | | |
| | AC21 | U10 | | |
| | AC25 | U13 | | |
| | AC26 | U17 | | |
| | AD5 | U18 | | |
| | AD22 | V4 | | |
| | AE4 | V5 | | |
| | AE13 | V6 | | |
| | AE14 | V9 | | |
| | AE23 | V14 | | |
| | AF4 | V17 | | |
| | AF8 | V18 | | |
| | AF10 | V19 | | |
| | AF12 | W5 | | |
| | AF13 | W8 | | |
| | AF14 | W11 | | |
| | AF15 | W12 | | |
| | AF17 | W15 | | |
| | AF19 | W18 | | |
| | AF23 | Y1 | | |
| | — | Y3 | | |
| | — | Y20 | | |
| | — | Y22 | | |
| | — | AA2 | | |
| | — | AA21 | | |

† I = Input, O = Output, Z = High Impedance, S = Supply Voltage, GND = Ground

**Signal Descriptions (Continued)**

| SIGNAL NAME | PIN NO. GJL/ GNZ | PIN NO. GLS/ GNY | TYPE† | DESCRIPTION |
|---|---|---|---|---|
| GROUND PINS (CONTINUED) | | | | |
| $V_{SS}$ | — | AB1 | GND | Ground pins |
| | — | AB3 | | |
| | — | AB7 | | |
| | — | AB11 | | |
| | — | AB16 | | |
| | — | AB20 | | |
| | — | AB22 | | |

† I = Input, O = Output, Z = High Impedance, S = Supply Voltage, GND = Ground

## development support

TI offers an extensive line of development tools for the TMS320C6000 DSP platform, including tools to evaluate the performance of the processors, generate code, develop algorithm implementations, and fully integrate and debug software and hardware modules.

The following products support development of C6000™ DSP-based applications:

**Software Development Tools:**
Code Composer Studio™ Integrated Development Environment (IDE) including Editor
C/C++/Assembly Code Generation, and Debug plus additional development tools
Scalable, Real-Time Foundation Software (DSP/BIOS™), which provides the basic run-time target software needed to support any DSP application.

**Hardware Development Tools:**
Extended Development System (XDS™) Emulator (supports C6000 DSP multiprocessor system debug)
EVM (Evaluation Module)

For a complete listing of development-support tools for the TMS320C6000 DSP platform, visit the Texas Instruments web site on the Worldwide Web at http://www.ti.com uniform resource locator (URL). For information on pricing and availability, contact the nearest TI field sales office or authorized distributor.

Code Composer Studio, DSP/BIOS, XDS, and TMS320 are trademarks of Texas Instruments.

## device and development-support tool nomenclature

To designate the stages in the product development cycle, TI assigns prefixes to the part numbers of all TMS320 DSP devices and support tools. Each TMS320 DSP commercial family member has one of three prefixes: TMX, TMP, or TMS. Texas Instruments recommends two of three possible prefix designators for support tools: TMDX and TMDS. These prefixes represent evolutionary stages of product development from engineering prototypes (TMX/TMDX) through fully qualified production devices/tools (TMS/TMDS).

Device development evolutionary flow:

**TMX** Experimental device that is not necessarily representative of the final device's electrical specifications

**TMP** Final silicon die that conforms to the device's electrical specifications but has not completed quality and reliability verification

**TMS** Fully qualified production device

Support tool development evolutionary flow:

**TMDX** Development-support product that has not yet completed Texas Instruments internal qualification testing.

**TMDS** Fully qualified development-support product

TMX and TMP devices and TMDX development-support tools are shipped against the following disclaimer:

"Developmental product is intended for internal evaluation purposes."

TMS devices and TMDS development-support tools have been characterized fully, and the quality and reliability of the device have been demonstrated fully. TI's standard warranty applies.

Predictions show that prototype devices (TMX or TMP) have a greater failure rate than the standard production devices. Texas Instruments recommends that these devices not be used in any production system because their expected end-use failure rate still is undefined. Only qualified production devices are to be used.

TI device nomenclature also includes a suffix with the device family name. This suffix indicates the package type (for example, GLS), the temperature range (for example, blank is the default commercial temperature range), and the device speed range in megahertz (for example, -250 is 250 MHz).

Table 16 lists the device orderable part numbers (P/Ns) and Figure 4 provides a legend for reading the complete device name for any member of the TMS320C6000 DSP platform. For more information on the C6202/02B device orderable P/Ns, visit the Texas Instruments web site on the Worldwide web at http://www.ti.com URL, or contact the nearest TI field sales office or authorized distributor.

## device and development-support tool nomenclature (continued)

### Table 16. TMS320C6202/02B Device Part Numbers (P/Ns) and Ordering Information

| DEVICE ORDERABLE P/N | DEVICE SPEED | $CV_{DD}$ (CORE VOLTAGE) | $DV_{DD}$ (I/O VOLTAGE) | OPERATING CASE TEMPERATURE RANGE |
|---|---|---|---|---|
| **C6202** | | | | |
| TMS320C6202GJL200 | 200 MHz/1600 MIPS | 1.8 V | 3.3 V | 0°C to 90°C |
| TMS320C6202GJL250 | 250 MHz/2000 MIPS | 1.8 V | 3.3 V | 0°C to 90°C |
| TMS320C6202GJLA200 | 200 MHz/1600 MIPS | 1.8 V | 3.3 V | –40°C to105°C |
| TMS320C6202GLS200 | 200 MHz/1600 MIPS | 1.8 V | 3.3 V | 0°C to 90°C |
| TMS320C6202GLS250 | 250 MHz/2000 MIPS | 1.8 V | 3.3 V | 0°C to 90°C |
| **C6202B** | | | | |
| TMS320C6202BGNY250 | 250 MHz/2000 MIPS | 1.5 V | 3.3 V | 0°C to 90°C |
| TMS320C6202BGNY300 | 300 MHz/2400 MIPS | 1.5 V | 3.3 V | 0°C to 90°C |
| TMS320C6202BGNZ250 | 250 MHz/2000 MIPS | 1.5 V | 3.3 V | 0°C to 90°C |
| TMS320C6202BGNZ300 | 300 MHz/2400 MIPS | 1.5 V | 3.3 V | 0°C to 90°C |
| TMS32C6202BGNZA250 | 250 MHz/2000 MIPS | 1.5 V | 3.3 V | –40°C to 105°C |

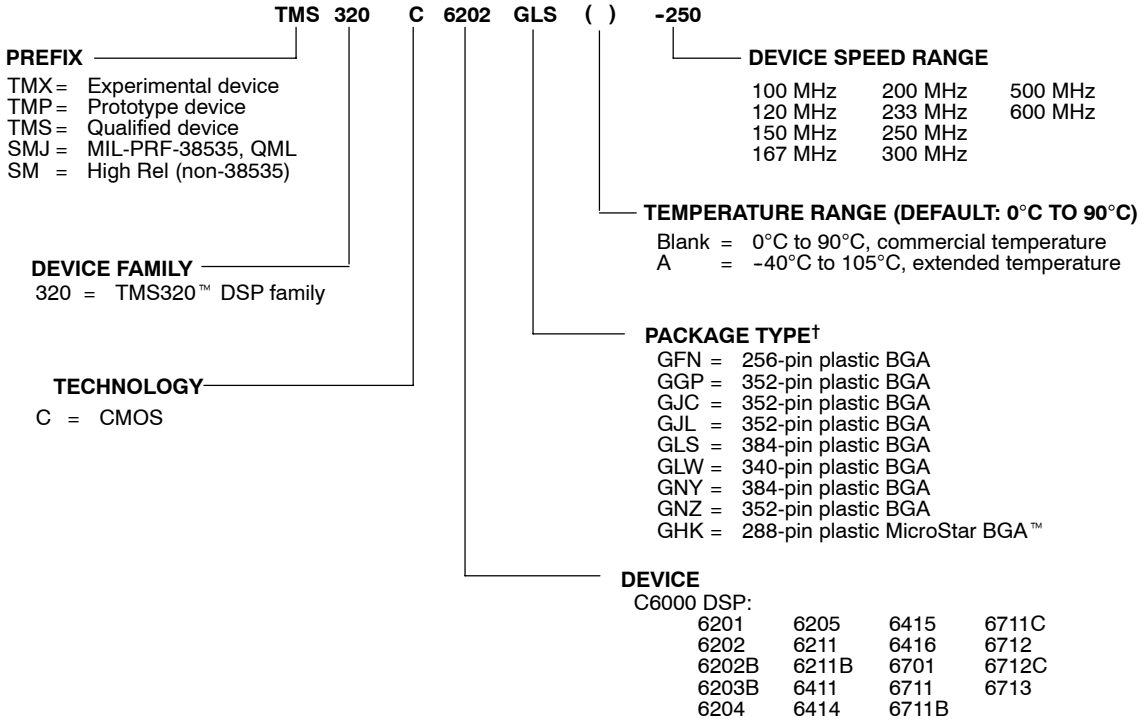


† BGA = Ball Grid Array

**Figure 4. TMS320C6000™ DSP Platform Device Nomenclature (Including TMS320C6202 and C6202B)**

MicroStar BGA is a trademark of Texas Instruments.

## documentation support

Extensive documentation supports all TMS320 DSP family devices from product announcement through applications development. The types of documentation available include: data sheets, such as this document, with design specifications; complete user's reference guides for all devices and tools; technical briefs; development-support tools; on-line help; and hardware and software applications. The following is a brief, descriptive list of support documentation specific to the C6000 DSP devices:

The *TMS320C6000 CPU and Instruction Set Reference Guide* (literature number SPRU189) describes the C6000 CPU (DSP core) architecture, instruction set, pipeline, and associated interrupts.

The *TMS320C6000 DSP Peripherals Overview Reference Guide* (literature number SPRU190) briefly describes the functionality of the peripherals available on the C6000 DSP platform of devices, such as the 64-/32-/16-bit external memory interfaces (EMIFs), 32-/16-bit host-port interfaces (HPIs), multichannel buffered serial ports (McBSPs), direct memory access (DMA), enhanced direct-memory-access (EDMA) controller, expansion bus (XBus), peripheral component interconnect (PCI), clocking and phase-locked loop (PLL); and power-down modes.

The *How to Begin Development Today and Migrate Across the TMS320C6202/02B/03B/04 DSPs Application Report* (literature number SPRA603) describes the migration concerns and identifies the similarities and differences between the C6202, C6202B, C6203B, and C6204 C6000 DSP devices.

The *TMS320C6202, TMS320C6202B Digital Signal Processors Silicon Errata* (literature number SPRZ152) describes the known exceptions to the functional specifications for particular silicon revisions of the TMS320C6202 device . There are currently *no* known silicon advisories on the TMS320C6202B device.

The *Using IBIS Models for Timing Analysis Application Report* (literature number SPRA839) describes how to properly use IBIS models to attain accurate timing analysis for a given system.

The tools support documentation is electronically available within the Code Composer Studio™ IDE. For a complete listing of the latest C6000 DSP documentation, visit the Texas Instruments web site on the Worldwide Web at http://www.ti.com uniform resource locator (URL).

## clock PLL

All of the internal C6202/02B clocks are generated from a single source through the CLKIN pin. This source clock either drives the PLL, which multiplies the source clock in frequency to generate the internal CPU clock, or bypasses the PLL to become the internal CPU clock.

To use the PLL to generate the CPU clock, the external PLL filter circuit must be properly designed. Figure 5, and Table 17 through Table 20 show the external PLL circuitry for either x1 (PLL bypass) or x4 PLL multiply modes. Figure 6 shows the external PLL circuitry for a system with ONLY x1 (PLL bypass) mode.

To minimize the clock jitter, a single clean power supply should power both the C6202/02B device and the external clock oscillator circuit. Noise coupling into PLLF directly impacts PLL clock jitter. The minimum CLKIN rise and fall times should also be observed. For the input clock timing requirements, see the Input and Output Clocks electricals section.

## clock PLL (continued)

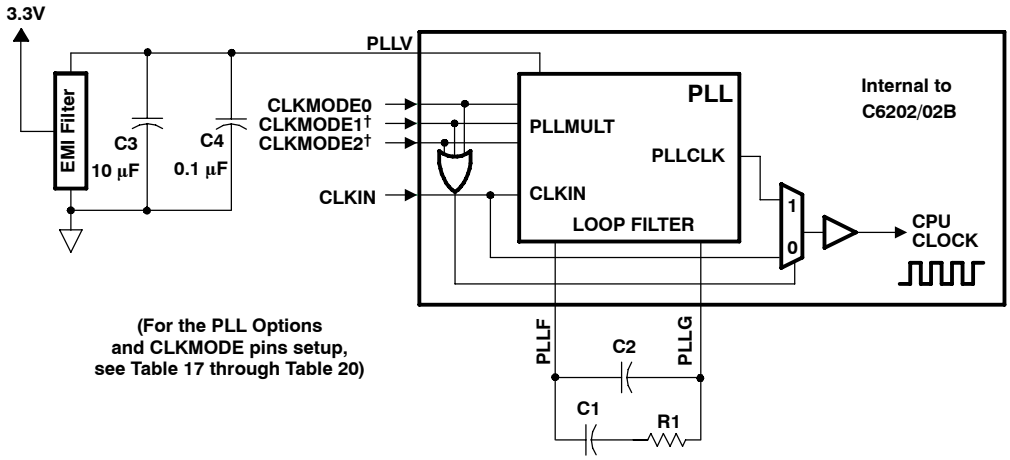


† CLKMODE1 and CLKMODE2 pins are not applicable (N/A) to the C6202 GJL package. The CLKMODE2 pin is also N/A on the C6202B GNZ package.

NOTES: A. Keep the lead length and the number of vias between pin PLLF, pin PLLG, R1, C1, and C2 to a minimum. In addition, place all PLL components (R1, C1, C2, C3, C4, and EMI Filter) as close to the C6000 DSP device as possible. Best performance is achieved with the PLL components on a single side of the board without jumpers, switches, or components other than the ones shown.

B. For reduced PLL jitter, maximize the spacing between switching signals and the PLL external components (R1, C1, C2, C3, C4, and the EMI Filter).

C. The 3.3-V supply for the EMI filter must be from the same 3.3-V power plane supplying the I/O voltage, $DV_{DD}$.

D. EMI filter manufacturer: TDK part number ACF451832-333, 223, 153, 103. Panasonic part number EXCCET103U.

**Figure 5. External PLL Circuitry for Either PLL Multiply Modes or x1 (Bypass) Mode**

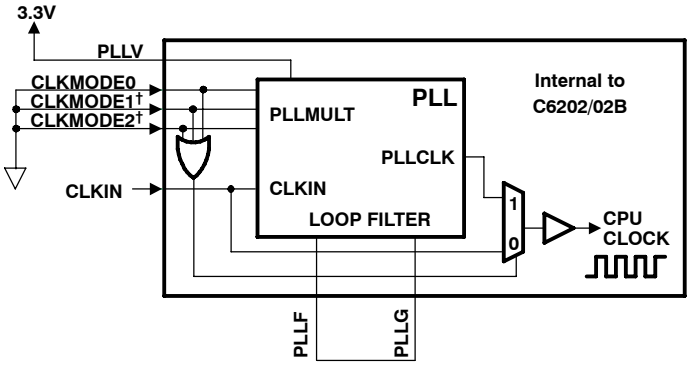


† CLKMODE1 and CLKMODE2 pins are not applicable (N/A) to the C6202 GJL package. The CLKMODE2 pin is also N/A on the C6202B GNZ package.

NOTES: A. For a system with ONLY PLL x1 (bypass) mode, short the PLLF to PLLG.

B. The 3.3-V supply for PLLV must be from the same 3.3-V power plane supplying the I/O voltage, $DV_{DD}$.

**Figure 6. External PLL Circuitry for x1 (Bypass) PLL Mode Only**

## clock PLL (continued)

### Table 17. TMS320C6202 GLS and C6202B GNY Packages PLL Multiply and Bypass (x1) Options†

| GLS PACKAGE – 18 X 18 MM BGA [C6202 ONLY] AND GNY PACKAGE – 18 X 18 MM BGA [C6202B ONLY] | | | | | |
|---|---|---|---|---|---|
| BIT (PIN NO.) | CLKMODE2 (A14) | CLKMODE1 (A9) | CLKMODE0 (B12) | DEVICES AND PLL CLOCK OPTIONS | |
| | | | | C6202 (GLS)‡ | C6202B (GNY) |
| Value | 0 | 0 | 0 | Bypass (x1) | Bypass (x1) |
| | 0 | 0 | 1 | x4 | x4 |
| | 0 | 1 | 0 | Bypass (x1) | x8 |
| | 0 | 1 | 1 | x4 | x10 |
| | 1 | 0 | 0 | Bypass (x1) | x6 |
| | 1 | 0 | 1 | x4 | x9 |
| | 1 | 1 | 0 | Bypass (x1) | x7 |
| | 1 | 1 | 1 | x4 | x11 |

† f(CPU Clock) = f(CLKIN) x (PLL mode)
‡ For the C6202 GLS package, the CLKMODE2 (A14) and CLKMODE1 (A9) pins are internally unconnected.

### Table 18. TMS320C6202 GJL and TMS320C6202B GNZ Packages PLL Multiply and Bypass (x1) Options†

| GJL PACKAGE 27 X 27 MM BGA [C6202 ONLY] AND GNZ PACKAGE – 27 X 27 MM BGA [C6202B ONLY] | | | | | |
|---|---|---|---|---|---|
| BIT (PIN NO.) | CLKMODE2 (N/A)§ | CLKMODE1 (C11)§ | CLKMODE0 (B15) | DEVICES AND PLL CLOCK OPTIONS | |
| | | | | C6202 (GJL)§ | C6202B (GNZ)§ |
| Value | N/A | 0 | 0 | Bypass (x1) | Bypass (x1) |
| | | 0 | 1 | x4 | x4 |
| | | 1 | 0 | N/A | x8 |
| | | 1 | 1 | | x10 |

† f(CPU Clock) = f(CLKIN) x (PLL mode)
§ CLKMODE2 and CLKMODE1 pins are *not* available on the C6202 GJL package.
The CLKMODE2 pin is *not* available (N/A) on the C6202B GNZ package.

### Table 19. TMS320C6202 PLL Component Selection Table†

| CLKMODE | CLKIN RANGE (MHZ) | CPU CLOCK FREQUENCY (CLKOUT1) RANGE (MHZ) | CLKOUT2 RANGE (MHZ) | R1 [±1%] | C1 [±10%] | C2 [±10%] | TYPICAL LOCK TIME (μS) |
|---|---|---|---|---|---|---|---|
| x4 | 32.5–62.5 | 130–250 | 65–125 | 60.4 Ω | 27 nF | 560 pF | 75 |

† Under some operating conditions, the maximum PLL lock time may vary by as much as 150% from the specified typical value. For example, if the typical lock time is specified as 100 μs, the maximum value may be as long as 250 μs.

## clock PLL (continued)

**Table 20. TMS320C6202B PLL Component Selection Table†**

| CLKMODE‡ | CLKIN RANGE (MHZ) | CPU CLOCK FREQUENCY RANGE (MHZ) | CLKOUT2 RANGE (MHZ) | R1 [±1%] | C1 [±10%] | C2 [±10%] | TYPICAL LOCK TIME (μS) |
|---|---|---|---|---|---|---|---|
| x4 | 32.5–75 | 130–300 | 65–150 | 45.3 Ω | 47 nF | 10 pF | 75 |
| x6 | 21.7–50 | | | | | | |
| x7 | 18.6–42.9 | | | | | | |
| x8 | 16.3–37.5 | | | | | | |
| x9 | 14.4–33.3 | | | | | | |
| x10 | 13–30 | | | | | | |
| x11 | 11.8–27.3 | | | | | | |

† Under some operating conditions, the maximum PLL lock time may vary by as much as 150% from the specified typical value. For example, if the typical lock time is specified as 100 μs, the maximum value may be as long as 250 μs.

‡ CLKMODE x1, x4, x6, x7, x8, x9, x10, and x11 apply to the C6202B GNY devices. The C6202B GNZ device is restricted to x1, x4, x8, and x10 multiply factors.

## power-down mode logic

Figure 7 shows the power-down logic on for the 6202/6202B.

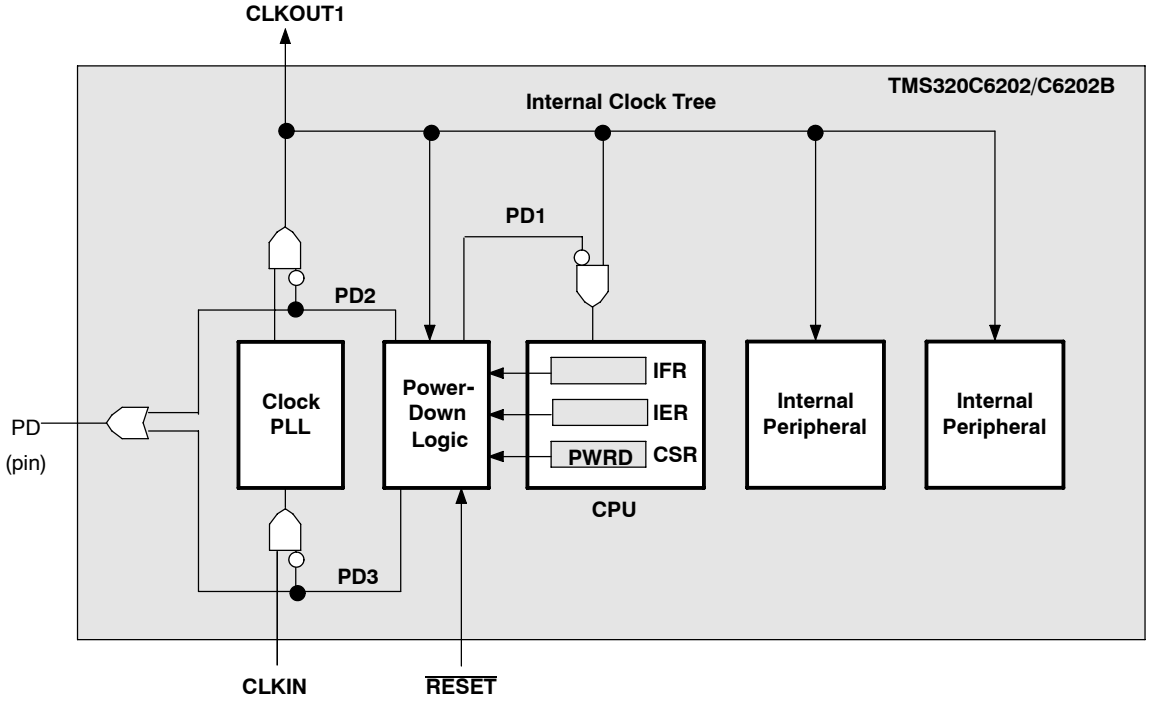


**Figure 7. Power-Down Mode Logic**

### triggering, wake-up, and effects

The power-down modes and their wake-up methods are programmed by setting the PWRD field (bits 10–15) of the control status register (CSR). The PWRD field of the CSR is shown in Figure 8 and described in Table 21. When writing to the CSR, all bits of the PWRD field should be set at the same time. Logic 0 should be used when writing to the reserved bit (bit 15) of the PWRD field. The CSR is discussed in detail in the *TMS320C6000 CPU and Instruction Set Reference Guide* (literature number SPRU189).

| 31 | | | | | | | 16 |
|---|---|---|---|---|---|---|---|
| | | | | | | | |

| 15 | 14 | 13 | 12 | 11 | 10 | 9 | 8 |
|---|---|---|---|---|---|---|---|
| Reserved | Enable or non-enabled interrupt wake | Enabled interrupt wake | PD3 | PD2 | PD1 | | |
| R/W-0 | R/W-0 | R/W-0 | R/W-0 | R/W-0 | R/W-0 | | |

| 7 | | | | | | | 0 |
|---|---|---|---|---|---|---|---|
| | | | | | | | |

**Legend:** R/W–x = Read/write reset value

NOTE: The shadowed bits are not part of the power-down logic discussion and therefore are not covered here. For information on these other bit fields in the CSR register, see the *TMS320C6000 CPU and Instruction Set Reference Guide* (literature number SPRU189).

**Figure 8. PWRD Field of the CSR Register**

Power-down mode PD1 takes effect eight to nine clock cycles after the instruction that sets the PWRD bits in the CSR.

If PD1 mode is terminated by a non-enabled interrupt, the program execution returns to the instruction where PD1 took effect. If PD1 mode is terminated by an enabled interrupt, the interrupt service routine will be executed first, then the program execution returns to the instruction where PD1 took effect. The GIE bit in CSR and the NMIE bit in the interrupt enable register (IER) must also be set in order for the interrupt service routine to execute; otherwise, execution returns to the instruction where PD1 took effect upon PD1 mode termination by an enabled interrupt.

PD2 and PD3 modes can only be aborted by device reset. Table 21 summarizes all the power-down modes.

### triggering, wake-up, and effects (continued)

**Table 21. Characteristics of the Power-Down Modes**

| PRWD BITS 15–10 | POWER-DOWN MODE | WAKE-UP METHOD | EFFECT ON CHIP'S OPERATION |
|---|---|---|---|
| 000000 | No power-down | — | |
| 001001 | PD1 | Wake by an enabled interrupt | CPU halted (except for the interrupt logic)<br>Power-down mode blocks the internal clock inputs at the boundary of the CPU, preventing most of its logic from switching. During PD1, DMA transactions can proceed between peripherals and internal memory. |
| 010001 | PD1 | Wake by an enabled or non-enabled interrupt | |
| 011010 | PD2† | Wake by a device reset | Output clock from PLL is halted, stopping the internal clock structure from switching and resulting in the entire chip being halted. Signal terminal PD is driven high. All register and internal RAM contents are preserved. All functional I/O "freeze" in the last state when the PLL clock is turned off.‡ |
| 011100 | PD3† | Wake by a device reset | Input clock to the PLL stops generating clocks. Signal terminal PD is driven high. All register and internal RAM contents are preserved. All functional I/O "freeze" in the last state when the PLL clock is turned off.† Following reset, the PLL needs time to re-lock, just as it does following power-up.<br>Wake-up from PD3 takes longer than wake-up from PD2 because the PLL needs to be re-locked. |
| other | Reserved | — | |

† On the C6202/C6202B, both the PD2 and PD3 signals assert the PD pin for external recognition of these two power-down modes.
‡ When entering PD2 and PD3, all functional I/O will remain in the previous state. However, for peripherals which are asynchronous in nature (HPI) or peripherals with an external clock source (McBSP, XBUS, timers), output signals may transition in response to stimulus on the inputs. Peripheral operation may not perform as intended under these conditions.

### peripheral power-down mode for TMS320C6202/6202B

The C6202/C6202B has the ability to turn off clocks to individual peripherals on the device. This feature allows the user to selectively turn off peripherals which are not being used for a specific application and not pay the extra price in power consumption for unused peripherals.

The Figure 9 title displays the peripheral power down register address location and Figure 9 itself shows the register fields.

| 31 – 16 | 15 – 8 | 7 – 5 | 4 | 3 | 2 | 1 | 0 |
|---|---|---|---|---|---|---|---|
| Reserved | Reserved | Reserved | MCBSP2 | MCBSP1 | MCBSP0 | EMIF | DMA |
| R-0 | R-0 | R-0 | R/W-0 | R/W-0 | R/W-0 | R/W-0 | R/W-0 |

**Legend:** R/W–x = Read/write reset value

**Figure 9. Peripheral Power-Down Control Register (PDCTL) for TMS320C6202/6202B (019C 0200h)**

### peripheral power-down mode for TMS320C6202/6202B (continued)

Table 22 lists and describes the fields in the peripheral power-down control register (PDCTL).

**Table 22. Power-Down Control Register (PDCTL) Field Descriptions**

| BIT | FIELD | VALUES | DESCRIPTION |
|---|---|---|---|
| 31–5 | Reserved | | Reserved. The reserved bit location is always read as zero. A value written to this field has no effect. |
| 4 | MCBSP2 | | Internal McBSP2 clock enable bit. |
| | | 0 | Internal McBSP2 clock is enabled. |
| | | 1 | Internal McBSP2 clock is disabled. McBSP2 is not functional. |
| 3 | MCBSP1 | | Internal McBSP1 clock enable bit. |
| | | 0 | Internal McBSP1 clock is enabled. |
| | | 1 | Internal McBSP1 clock is disabled. McBSP1 is not functional. |
| 2 | MCBSP0 | | Internal McBSP0 clock enable bit. |
| | | 0 | Internal McBSP0 clock is enabled. |
| | | 1 | Internal McBSP0 clock is disabled. McBSP1 is not functional. |
| 1 | EMIF | | Internal EMIF clock enable bit. |
| | | 0 | Internal EMIF clock is enabled. |
| | | 1 | Internal EMIF clock is disabled. EMIF is not functional. |
| 0 | DMA | | Internal DMA clock enable bit. |
| | | 0 | Internal DMA clock is enabled. |
| | | 1 | Internal DMA clock is disabled. DMA is not functional. |

The user must be careful to not disable a portion of the device which is being used, since the peripheral becomes non-operational once disabled. A clock-off mode can be entered and exited depending on the needs of the application. For example, if an application does not need the serial ports, the ports can be disabled and then re-enabled when needed. While a peripheral is in power-down mode, no writes to the peripheral's registers will occur; and reads from the peripheral will produce invalid data.

When re-enabling any of the peripheral power-down bits, the CPU should wait at least 5 additional clock cycles before attempting to access that peripheral.

## power-supply sequencing

TI DSPs do not require specific power sequencing between the core supply and the I/O supply. However, systems should be designed to ensure that neither supply is powered up for extended periods of time (>1 second) if the other supply is below the proper operating voltage.

### system-level design considerations

System-level design considerations, such as bus contention, may require supply sequencing to be implemented. In this case, the core supply should be powered up at the same time as, or prior to (and powered down after), the I/O buffers. This is to ensure that the I/O buffers receive valid inputs from the core before the output buffers are powered up, thus, preventing bus contention with other chips on the board.

### power-supply design considerations

A dual-power supply with simultaneous sequencing can be used to eliminate the delay between core and I/O power up. A Schottky diode can also be used to tie the core rail to the I/O rail (see Figure 10).

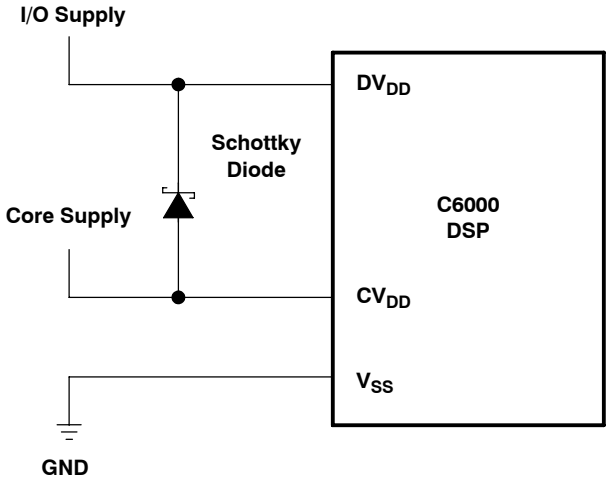


**Figure 10. Schottky Diode Diagram**

Core and I/O supply voltage regulators should be located close to the DSP (or DSP array) to minimize inductance and resistance in the power delivery path. Additionally, when designing for high-performance applications utilizing the C6000 platform of DSPs, the PC board should include separate power planes for core, I/O, and ground, all bypassed with high-quality low-ESL/ESR capacitors.

On systems using C62x and C67x DSPs, the core may consume in excess of 2 A per DSP until the I/O supply powers on. This extra current results from uninitialized logic within the DSP(s). A normal current state returns once the I/O power supply turns on and the CPU sees a clock pulse. Decreasing the amount of time between the core supply power-up and the I/O supply power-up reduces the effects of the current draw. If the external supply to the DSP core cannot supply the excess current, the minimum core voltage may not be achieved until after normal current returns. This voltage starvation of the core supply during power up does not affect run-time operation. Voltage starvation can affect power supply systems that gate the I/O supply via the core supply, causing the I/O supply to never turn on. During the transition from excess to normal current, a voltage spike may be seen on the core supply. Care must be taken when designing overvoltage protection circuitry on the core supply to not restart the power sequence due to this spike. Otherwise, the supply may cycle indefinitely.

## IEEE 1149.1 JTAG compatibility statement

For compatibility with IEEE 1149.1 JTAG programmers, the $\overline{\text{TRST}}$ pin may need to be externally pulled up via a 1-kΩ resistor. For these C62x devices, this pin is internally pulled down, holding the JTAG port in reset by default. This is typically only a problem in systems where the DSP shares a scan chain with some other device. Some JTAG programmers for these other devices do not actively drive $\overline{\text{TRST}}$ high, leaving the scan chain inoperable while the C62x JTAG port is held in reset. TI emulators *do* drive $\overline{\text{TRST}}$ high, so the external pullup resistor is not needed in systems where TI emulators are the only devices that control JTAG scan chains on which the DSP(s) reside. If the system has other devices in the same scan chain as the DSP, and the programmer for these devices does *not* drive $\overline{\text{TRST}}$ high, then an external 1-kΩ pullup resistor is required.

With this external 1-kΩ pullup resistor installed, care must be taken to keep the DSP in a usable state under all circumstances. When $\overline{\text{TRST}}$ is pulled up, the JTAG driver must maintain the TMS signal high for 5 TCLK cycles, forcing the DSP(s) into the test logic reset (TLR) state. From the TLR state, the DSP's data scan path can be put in bypass (scan all 1s into the IR) to scan the other devices. The TLR state also allows normal operation of the DSP. If operation without anything driving the JTAG port is desired, the pullup resistor should be jumpered so that it can be engaged for programming the other devices and disconneted for running without a JTAG programmer or emulator.

## absolute maximum ratings over operating case temperature ranges (unless otherwise noted)†

Supply voltage range, $CV_{DD}$ (see Note 1) . . . . . – 0.3 V to 2.3 V
Supply voltage range, $DV_{DD}$ (see Note 1) . . . . . –0.3 V to 4 V
Input voltage range . . . . . –0.3 V to 4 V
Output voltage range . . . . . –0.3 V to 4 V
Operating case temperature ranges, $T_C$: (default) . . . . . 0°C to 90°C
(A version): C6202BGNZA-250 . . . . . –40°C to105°C
Storage temperature range, $T_{stg}$ . . . . . –65°C to 150°C
Temperature cycle range, (1000-cycle performance) . . . . . –40°C to 125°C

† Stresses beyond those listed under "absolute maximum ratings" may cause permanent damage to the device. These are stress ratings only, and functional operation of the device at these or any other conditions beyond those indicated under "recommended operating conditions" is not implied. Exposure to absolute-maximum-rated conditions for extended periods may affect device reliability.
NOTE 1: All voltage values are with respect to $V_{SS}$.

## recommended operating conditions

| | | | MIN | NOM | MAX | UNIT |
|---|---|---|---|---|---|---|
| $CV_{DD}$ | Supply voltage, Core | C6202B only | 1.43 | 1.5 | 1.57 | V |
| $CV_{DD}$ | Supply voltage, Core | C6202 only | 1.71 | 1.8 | 1.89 | V |
| $DV_{DD}$ | Supply voltage, I/O | | 3.14 | 3.3 | 3.46 | V |
| $V_{SS}$ | Supply ground | | 0 | 0 | 0 | V |
| $V_{IH}$ | High-level input voltage | | 2 | | | V |
| $V_{IL}$ | Low-level input voltage | | | | 0.8 | V |
| $I_{OH}$ | High-level output current | | | | –8 | mA |
| $I_{OL}$ | Low-level output current | | | | 8 | mA |
| $T_C$ | Operating case temperature | Default | 0 | | 90 | °C |
| | | A version: C6202BGNZA-250 | –40 | | 105 | °C |

## electrical characteristics over recommended ranges of supply voltage and operating case temperature (unless otherwise noted)

| PARAMETER | | TEST CONDITIONS | MIN | TYP | MAX | UNIT |
|---|---|---|---|---|---|---|
| $V_{OH}$ | High-level output voltage | $DV_{DD}$ = MIN, $I_{OH}$ = MAX | 2.4 | | | V |
| $V_{OL}$ | Low-level output voltage | $DV_{DD}$ = MIN, $I_{OL}$ = MAX | | | 0.6 | V |
| $I_I$ | Input current‡ | $V_I = V_{SS}$ to $DV_{DD}$ | | | ±10 | uA |
| $I_{OZ}$ | Off-state output current | $V_O = DV_{DD}$ or 0 V | | | ±10 | uA |
| $I_{DD2V}$ | Supply current, CPU + CPU memory access§ | C6202, $CV_{DD}$ = NOM, CPU clock = 200 MHz | | 520 | | mA |
| | | C6202B, $CV_{DD}$ = NOM, CPU clock = 200 MHz | | 340 | | mA |
| $I_{DD2V}$ | Supply current, peripherals§ | C6202, $CV_{DD}$ = NOM, CPU clock = 200 MHz | | 390 | | mA |
| | | C6202B, $CV_{DD}$ = NOM, CPU clock = 200 MHz | | 235 | | mA |
| $I_{DD3V}$ | Supply current, I/O pins§ | C6202, $DV_{DD}$ = NOM, CPU clock = 200 MHz | | 70 | | mA |
| | | C6202B, $DV_{DD}$ = NOM, CPU clock = 200 MHz | | 45 | | mA |
| $C_i$ | Input capacitance | | | | 10 | pF |
| $C_o$ | Output capacitance | | | | 10 | pF |

‡ TMS and TDI are not included due to internal pullups. $\overline{TRST}$ is not included due to internal pulldown.
§ Measured with average activity (50% high / 50% low power). For more details on CPU, peripheral, and I/O activity, see the *TMS320C62x/C67x Power Consumption Summary* application report (literature number SPRA486).

## PARAMETER MEASUREMENT INFORMATION

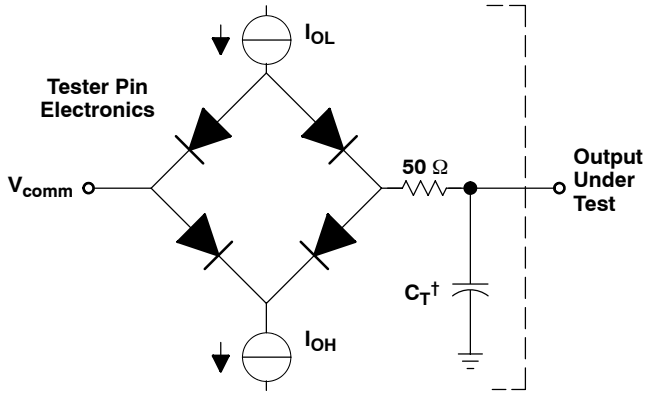


Where: $I_{OL}$ = 2 mA
$I_{OH}$ = 2 mA
$V_{comm}$ = 1.5 V
$C_T$ = 15-pF typical load-circuit capacitance

† Typical distributed load circuit capacitance

**Figure 11. Test Load Circuit for AC Timing Measurements**

### signal transition levels

All input and output timing parameters are referenced to 1.5 V for both “0” and “1” logic levels.

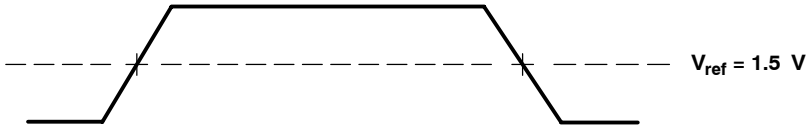


**Figure 12. Input and Output Voltage Reference Levels for ac Timing Measurements**

All rise and fall transition timing parameters are referenced to $V_{IL}$ MAX and $V_{IH}$ MIN for input clocks, and $V_{OL}$ MAX and $V_{OH}$ MIN for output clocks.

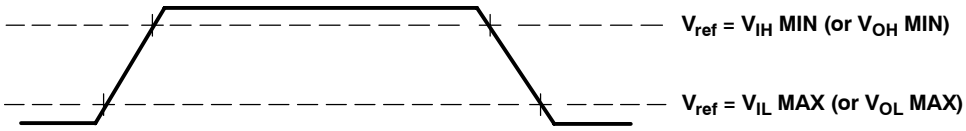


**Figure 13. Rise and Fall Transition Time Voltage Reference Levels**

## PARAMETER MEASUREMENT INFORMATION (CONTINUED)

### timing parameters and board routing analysis

The timing parameter values specified in this data sheet do *not* include delays by board routings. As a good board design practice, such delays must *always* be taken into account. Timing values may be adjusted by increasing/decreasing such delays. TI recommends utilizing the available I/O buffer information specification (IBIS) models to analyze the timing characteristics correctly. To properly use IBIS models to attain accurate timing analysis for a given system, see the *Using IBIS Models for Timing Analysis Application Repor*t (literature number SPRA839). If needed, external logic hardware such as buffers may be used to compensate any timing differences.

For inputs, timing is most impacted by the round-trip propagation delay from the DSP to the external device and from the external device to the DSP. This round-trip delay tends to negatively impact the input setup time margin, but also tends to improve the input hold time margins (see Table 23 and Figure 14).

Figure 14 represents a general transfer between the DSP and an external device. The figure also represents board route delays and how they are perceived by the DSP and the external device.

**Table 23. Board-Level TImings Example (see Figure 14)**

| NO. | DESCRIPTION |
|---|---|
| 1 | Clock route delay |
| 2 | Minimum DSP hold time |
| 3 | Minimum DSP setup time |
| 4 | External device hold time requirement |
| 5 | External device setup time requirement |
| 6 | Control signal route delay |
| 7 | External device hold time |
| 8 | External device access time |
| 9 | DSP hold time requirement |
| 10 | DSP setup time requirement |
| 11 | Data route delay |

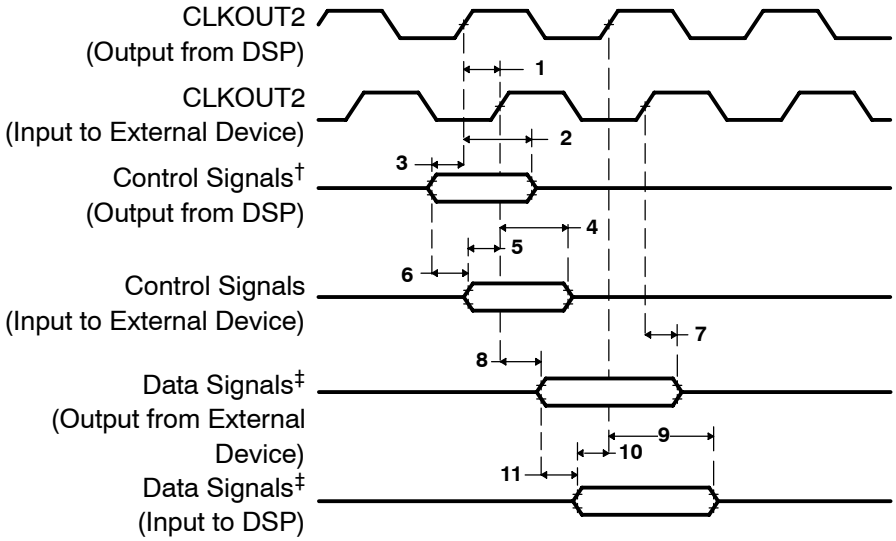


† Control signals include data for Writes.

‡ Data signals are generated during Reads from an external device.

**Figure 14. Board-Level Input/Output Timings**

## INPUT AND OUTPUT CLOCKS

### timing requirements for CLKIN (PLL used)†‡§ (see Figure 15)

| NO. | | | C6202-200 | | C6202-250 C6202B-250 | | C6202B-300 | | UNIT |
|---|---|---|---|---|---|---|---|---|---|
| | | | MIN | MAX | MIN | MAX | MIN | MAX | |
| 1 | $t_{c(CLKIN)}$ | Cycle time, CLKIN | 5 * M | | 4 * M | | 3.33 * M | | ns |
| 2 | $t_{w(CLKINH)}$ | Pulse duration, CLKIN high | 0.4C | | 0.4C | | 0.4C | | ns |
| 3 | $t_{w(CLKINL)}$ | Pulse duration, CLKIN low | 0.4C | | 0.4C | | 0.4C | | ns |
| 4 | $t_{t(CLKIN)}$ | Transition time, CLKIN | | 5 | | 5 | | 5 | ns |

† The reference points for the rise and fall transitions are measured at $V_{IL}$ MAX and $V_{IH}$ MIN.
‡ M = the PLL multiplier factor (x4, x6, x7, x8, x9, x10, or x11) for C6202 GLS and C6202B GNY only.
M = the PLL multiplier factor (x4, x6, x8, or x10) for C6202B GNZ only.
For more details, see the *Clock PLL* section of this data sheet.
§ C = CLKIN cycle time in ns. For example, when CLKIN frequency is 50 MHz, use C = 20 ns.

### timing requirements for CLKIN [PLL bypassed (x1)]†¶ (see Figure 15)

| NO. | | | C6202-200 | | C6202-250 C6202B-250 | | C6202B-300 | | UNIT |
|---|---|---|---|---|---|---|---|---|---|
| | | | MIN | MAX | MIN | MAX | MIN | MAX | |
| 1 | $t_{c(CLKIN)}$ | Cycle time, CLKIN | 5 | | 4 | | 3.33 | | ns |
| 2 | $t_{w(CLKINH)}$ | Pulse duration, CLKIN high | 0.45C | | 0.45C | | 0.45C | | ns |
| 3 | $t_{w(CLKINL)}$ | Pulse duration, CLKIN low | 0.45C | | 0.45C | | 0.45C | | ns |
| 4 | $t_{t(CLKIN)}$ | Transition time, CLKIN | | 0.6 | | 0.6 | | 0.6 | ns |

† The reference points for the rise and fall transitions are measured at $V_{IL}$ MAX and $V_{IH}$ MIN.
¶ C = CLKIN cycle time in ns. For example, when CLKIN frequency is 50 MHz, use C = 20 ns. The maximum CLKIN cycle time is PLL bypass mode (x1) is 200 MHz.

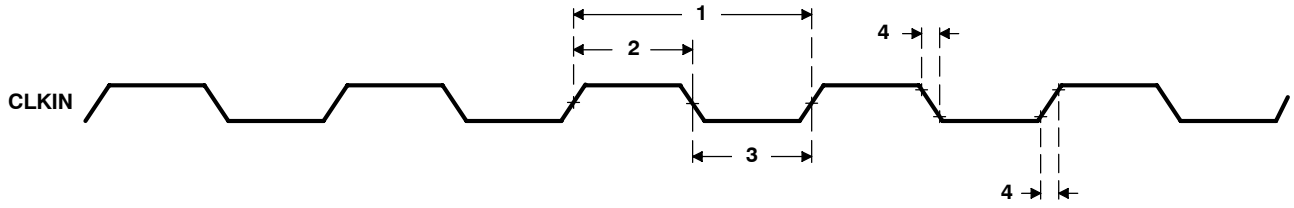


**Figure 15. CLKIN Timings**

## INPUT AND OUTPUT CLOCKS (CONTINUED)

### timing requirements for XCLKIN† (see Figure 16)

| NO. | | | C6202-200 C6202-250 C6202B-250 C6202B-300 | | UNIT |
|---|---|---|---|---|---|
| | | | MIN | MAX | |
| 1 | $t_{c(XCLKIN)}$ | Cycle time, XCLKIN | 4P | | ns |
| 2 | $t_{w(XCLKINH)}$ | Pulse duration, XCLKIN high | 1.8P | | ns |
| 3 | $t_{w(XCLKINL)}$ | Pulse duration, XCLKIN low | 1.8P | | ns |

† P = 1/CPU clock frequency in nanoseconds (ns).

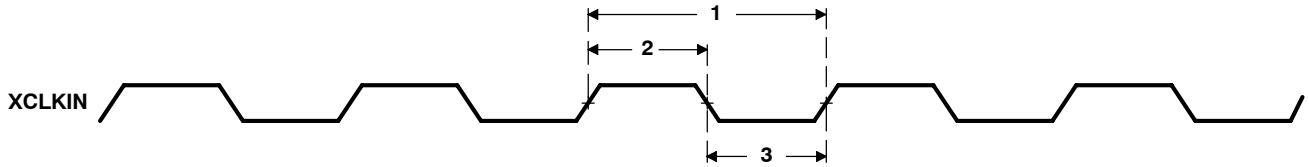


**Figure 16. XCLKIN Timings**

### switching characteristics over recommended operating conditions for CLKOUT2‡§ (see Figure 17)

| NO. | PARAMETER | | C6202-200 C6202-250 C6202B-250 C6202B-300 | | UNIT |
|---|---|---|---|---|---|
| | | | MIN | MAX | |
| 2 | $t_{w(CKO2H)}$ | Pulse duration, CLKOUT2 high | P – 0.7 | P + 0.7 | ns |
| 3 | $t_{w(CKO2L)}$ | Pulse duration, CLKOUT2 low | P – 0.7 | P + 0.7 | ns |

‡ P = 1/CPU clock frequency in ns.
§ The reference points for the rise and fall transitions are measured at $V_{OL}$ MAX and $V_{OH}$ MIN.

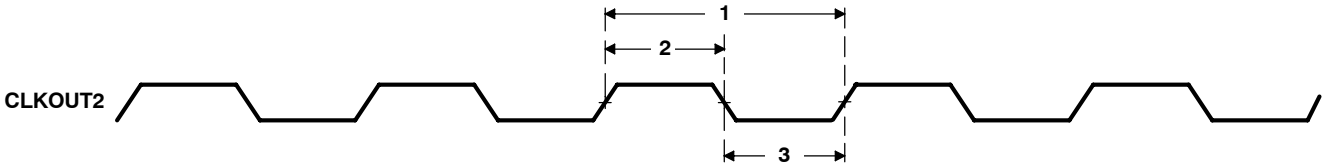


**Figure 17. CLKOUT2 Timings**

## INPUT AND OUTPUT CLOCKS (CONTINUED)

### switching characteristics over recommended operating conditions for XFCLK†‡ (see Figure 18)

| NO. | PARAMETER | | C6202-200<br>C6202-250<br>C6202B-250<br>C6202B-300 | | UNIT |
|---|---|---|---|---|---|
| | | | MIN | MAX | |
| 1 | $t_{c(XFCK)}$ | Cycle time, XFCLK | D * P – 0.7 | D * P + 0.7 | ns |
| 2 | $t_{w(XFCKH)}$ | Pulse duration, XFCLK high | (D/2) * P – 0.7 | (D/2) * P + 0.7 | ns |
| 3 | $t_{w(XFCKL)}$ | Pulse duration, XFCLK low | (D/2) * P – 0.7 | (D/2) * P + 0.7 | ns |

† P = 1/CPU clock frequency in ns.
‡ D = 8, 6, 4, or 2; FIFO clock divide ratio, user-programmable

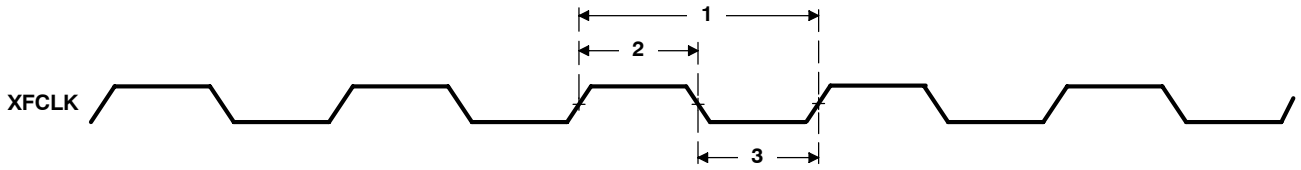


**Figure 18. XFCLK Timings**

## ASYNCHRONOUS MEMORY TIMING

### timing requirements for asynchronous memory cycles†‡§¶ (see Figure 19 – Figure 22)

| NO. | | | C6202-200 C6202-250 | | C6202B-250 C6202B-300 | | UNIT |
|---|---|---|---|---|---|---|---|
| | | | MIN | MAX | MIN | MAX | |
| 3 | $t_{su(EDV-AREH)}$ | Setup time, EDx valid before $\overline{ARE}$ high | 1 | | 1 | | ns |
| 4 | $t_{h(AREH-EDV)}$ | Hold time, EDx valid after $\overline{ARE}$ high | 3.5 | | 4.9 | | ns |
| 6 | $t_{su(ARDYH-AREL)}$ | Setup time, ARDY high before $\overline{ARE}$ low | –[(RST – 3) * P – 6] | | –[(RST – 3) * P – 6] | | ns |
| 7 | $t_{h(AREL-ARDYH)}$ | Hold time, ARDY high after $\overline{ARE}$ low | (RST – 3) * P + 2 | | (RST – 3) * P + 2 | | ns |
| 9 | $t_{su(ARDYL-AREL)}$ | Setup time, ARDY low before $\overline{ARE}$ low | –[(RST – 3) * P – 6] | | –[(RST – 3) * P – 6] | | ns |
| 10 | $t_{h(AREL-ARDYL)}$ | Hold time, ARDY low after $\overline{ARE}$ low | (RST – 3) * P + 2 | | (RST – 3) * P + 2 | | ns |
| 11 | $t_{w(ARDYH)}$ | Pulse width, ARDY high | 2P | | 2P | | ns |
| 15 | $t_{su(ARDYH-AWEL)}$ | Setup time, ARDY high before $\overline{AWE}$ low | –[(WST – 3) * P – 6] | | –[(WST – 3) * P – 6] | | ns |
| 16 | $t_{h(AWEL-ARDYH)}$ | Hold time, ARDY high after $\overline{AWE}$ low | (WST – 3) * P + 2 | | (WST – 3) * P + 2 | | ns |
| 18 | $t_{su(ARDYL-AWEL)}$ | Setup time, ARDY low before $\overline{AWE}$ low | –[(WST – 3) * P – 6] | | –[(WST – 3) * P – 6] | | ns |
| 19 | $t_{h(AWEL-ARDYL)}$ | Hold time, ARDY low after $\overline{AWE}$ low | (WST – 3) * P + 2 | | (WST – 3) * P + 2 | | ns |

† To ensure data setup time, simply program the strobe width wide enough. ARDY is internally synchronized. If ARDY does meet setup or hold time, it may be recognized in the current cycle or the next cycle. Thus, ARDY can be an asynchronous input.
‡ RS = Read Setup, RST = Read Strobe, RH = Read Hold, WS = Write Setup, WST = Write Strobe, WH = Write Hold. These parameters are programmed via the EMIF CE space control registers.
§ P = 1/CPU clock frequency in ns. For example, when running parts at 250 MHz, use P = 4 ns.
¶ The sum of RS and RST (or WS and WST) must be a minimum of 4 in order to use ARDY input to extend strobe width.

## ASYNCHRONOUS MEMORY TIMING (CONTINUED)

### switching characteristics over recommended operating conditions for asynchronous memory cycles†‡§¶ (see Figure 19 – Figure 22)

| NO. | PARAMETER | | C6202-200 C6202-250 | | | C6202B-250 C6202B-300 | | | UNIT |
|---|---|---|---|---|---|---|---|---|---|
| | | | MIN | TYP | MAX | MIN | TYP | MAX | |
| 1 | $t_{osu(SELV-AREL)}$ | Output setup time, select signals valid to $\overline{ARE}$ low | RS * P – 2 | | | RS * P – 2 | | | ns |
| 2 | $t_{oh(AREH-SELIV)}$ | Output hold time, $\overline{ARE}$ high to select signals invalid | RH * P – 2 | | | RH * P – 2 | | | ns |
| 5 | $t_{w(AREL)}$ | Pulse width, $\overline{ARE}$ low | | RST * P | | | RST * P | | ns |
| 8 | $t_{d(ARDYH-AREH)}$ | Delay time, ARDY high to $\overline{ARE}$ high | 3P | | 4P + 5 | 3P | | 4P + 5 | ns |
| 12 | $t_{osu(SELV-AWEL)}$ | Output setup time, select signals valid to $\overline{AWE}$ low | WS * P – 3 | | | WS * P – 2 | | | ns |
| 13 | $t_{oh(AWEH-SELIV)}$ | Output hold time, $\overline{AWE}$ high to select signals invalid | WH * P – 2 | | | WH * P – 2 | | | ns |
| 14 | $t_{w(AWEL)}$ | Pulse width, $\overline{AWE}$ low | | WST * P | | | WST * P | | ns |
| 17 | $t_{d(ARDYH-AWEH)}$ | Delay time, ARDY high to $\overline{AWE}$ high | 3P | | 4P + 5 | 3P | | 4P + 5 | ns |

† RS = Read Setup, RST = Read Strobe, RH = Read Hold, WS = Write Setup, WST = Write Strobe, WH = Write Hold. These parameters are programmed via the EMIF CE space control registers.

‡ P = 1/CPU clock frequency in ns. For example, when running parts at 250 MHz, use P = 4 ns.

§ The sum of RS and RST (or WS and WST) must be a minimum of 4 in order to use ARDY input to extend strobe width.

¶ Select signals include: $\overline{CEx}$, $\overline{BE[3:0]}$, EA[21:2], $\overline{AOE}$; and for writes, include ED[31:0], with the exception that $\overline{CEx}$ can stay active for an additional 7P ns following the end of the cycle.

## ASYNCHRONOUS MEMORY TIMING (CONTINUED)

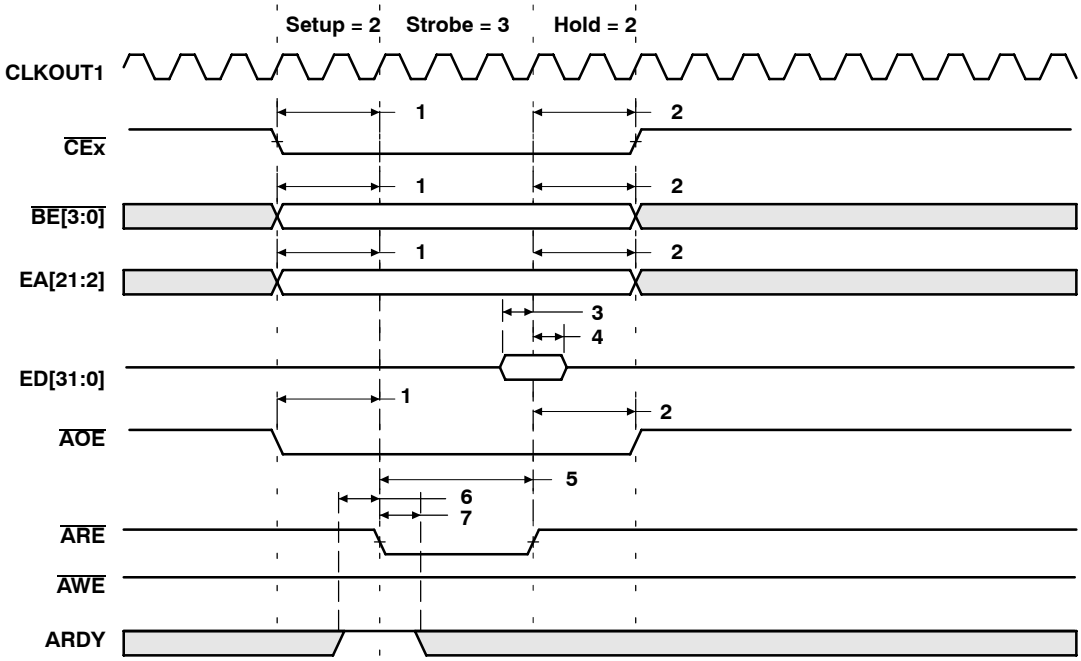


**Figure 19. Asynchronous Memory Read Timing (ARDY Not Used)**

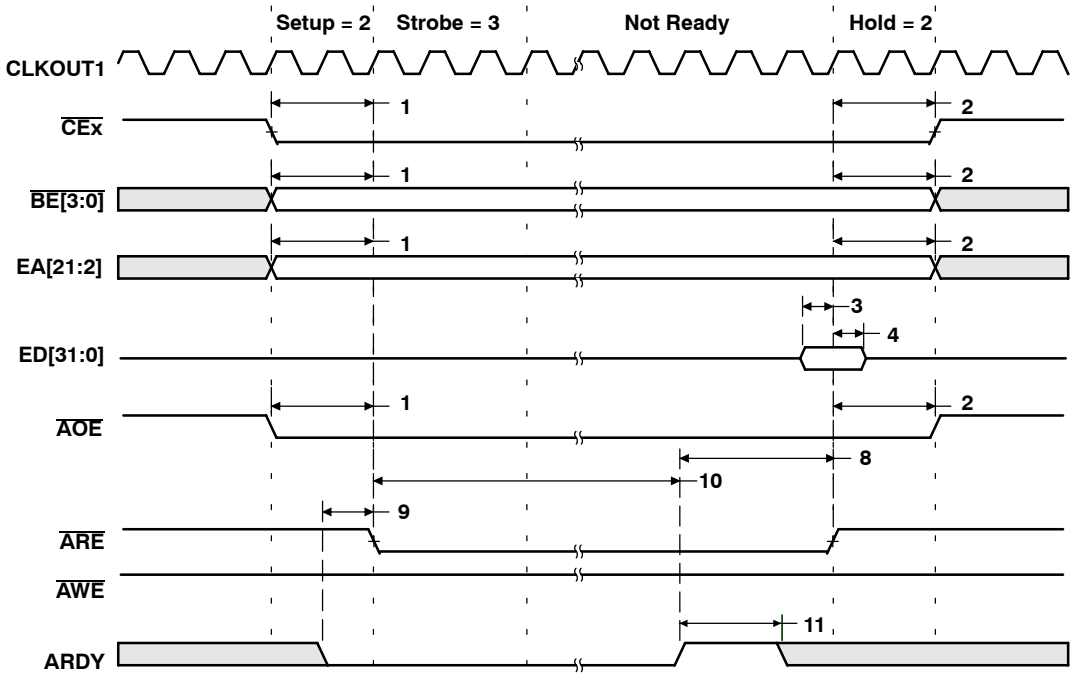


**Figure 20. Asynchronous Memory Read Timing (ARDY Used)**

## ASYNCHRONOUS MEMORY TIMING (CONTINUED)

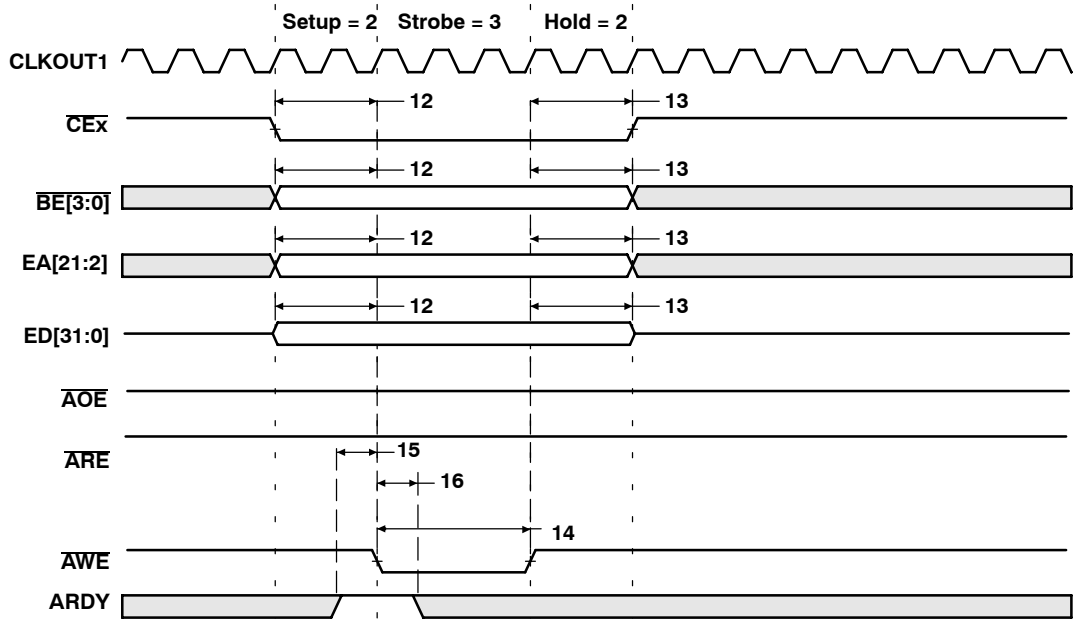


**Figure 21. Asynchronous Memory Write Timing (ARDY Not Used)**

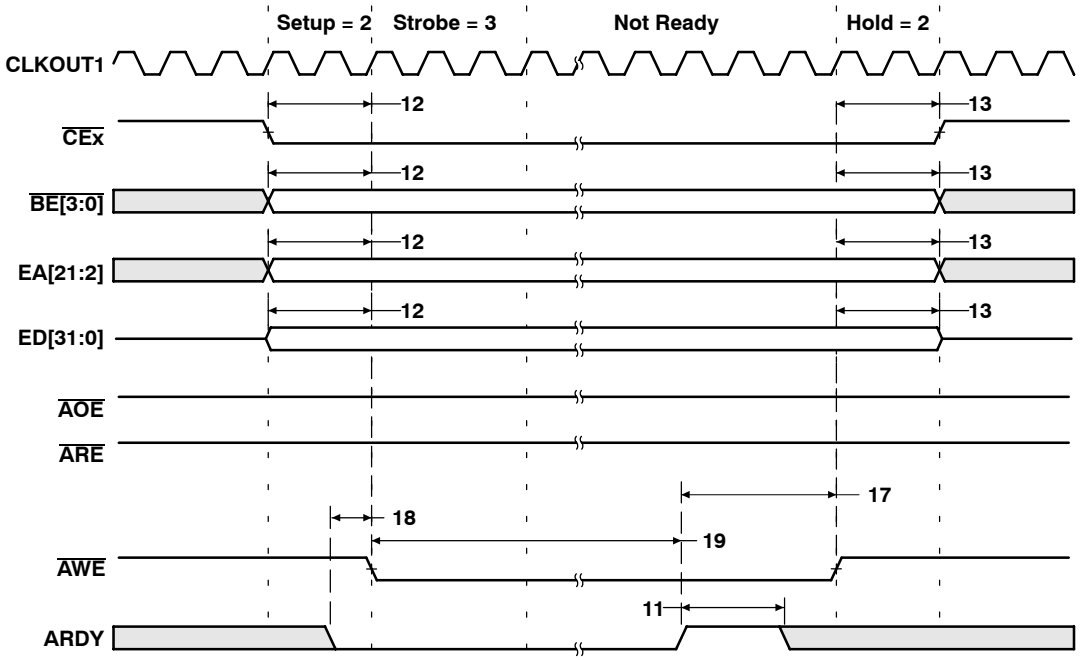


**Figure 22. Asynchronous Memory Write Timing (ARDY Used)**

## SYNCHRONOUS-BURST MEMORY TIMING

### timing requirements for synchronous-burst SRAM cycles for C6202 devices (see Figure 23)

| NO. | | | C6202-200 | | C6202-250 | | UNIT |
|---|---|---|---|---|---|---|---|
| | | | MIN | MAX | MIN | MAX | |
| 7 | $t_{su(EDV-CKO2H)}$ | Setup time, read EDx valid before CLKOUT2 high | 2.5 | | 2.0 | | ns |
| 8 | $t_{h(CKO2H-EDV)}$ | Hold time, read EDx valid after CLKOUT2 high | 2.0 | | 2.0 | | ns |

### switching characteristics over recommended operating conditions for synchronous-burst SRAM cycles for C6202 devices†‡ (see Figure 23 and Figure 24)

| NO. | PARAMETER | | C6202-200 | | C6202-250 | | UNIT |
|---|---|---|---|---|---|---|---|
| | | | MIN | MAX | MIN | MAX | |
| 1 | $t_{osu(CEV-CKO2H)}$ | Output setup time, $\overline{CEx}$ valid before CLKOUT2 high | P – 0.8 | | P – 0.8 | | ns |
| 2 | $t_{oh(CKO2H-CEV)}$ | Output hold time, $\overline{CEx}$ valid after CLKOUT2 high | P – 4 | | P – 3 | | ns |
| 3 | $t_{osu(BEV-CKO2H)}$ | Output setup time, $\overline{BEx}$ valid before CLKOUT2 high | P – 0.8 | | P – 0.8 | | ns |
| 4 | $t_{oh(CKO2H-BEIV)}$ | Output hold time, $\overline{BEx}$ invalid after CLKOUT2 high | P – 4 | | P – 3 | | ns |
| 5 | $t_{osu(EAV-CKO2H)}$ | Output setup time, EAx valid before CLKOUT2 high | P – 0.8 | | P – 0.8 | | ns |
| 6 | $t_{oh(CKO2H-EAIV)}$ | Output hold time, EAx invalid after CLKOUT2 high | P – 4 | | P – 3 | | ns |
| 9 | $t_{osu(ADSV-CKO2H)}$ | Output setup time, $\overline{SDCAS}/\overline{SSADS}$ valid before CLKOUT2 high | P – 0.8 | | P – 0.8 | | ns |
| 10 | $t_{oh(CKO2H-ADSV)}$ | Output hold time, $\overline{SDCAS}/\overline{SSADS}$ valid after CLKOUT2 high | P – 4 | | P – 3 | | ns |
| 11 | $t_{osu(OEV-CKO2H)}$ | Output setup time, $\overline{SDRAS}/\overline{SSOE}$ valid before CLKOUT2 high | P – 0.8 | | P – 0.8 | | ns |
| 12 | $t_{oh(CKO2H-OEV)}$ | Output hold time, $\overline{SDRAS}/\overline{SSOE}$ valid after CLKOUT2 high | P – 4 | | P – 3 | | ns |
| 13 | $t_{osu(EDV-CKO2H)}$ | Output setup time, EDx valid before CLKOUT2 high§ | P – 1.2 | | P – 1.2 | | ns |
| 14 | $t_{oh(CKO2H-EDIV)}$ | Output hold time, EDx invalid after CLKOUT2 high | P – 4 | | P – 3 | | ns |
| 15 | $t_{osu(WEV-CKO2H)}$ | Output setup time, $\overline{SDWE}/\overline{SSWE}$ valid before CLKOUT2 high | P – 0.8 | | P – 0.8 | | ns |
| 16 | $t_{oh(CKO2H-WEV)}$ | Output hold time, $\overline{SDWE}/\overline{SSWE}$ valid after CLKOUT2 high | P – 4 | | P – 3 | | ns |

† P = 1/CPU clock frequency in ns. For example, when running parts at 250 MHz, use P = 4 ns.
‡ $\overline{SDCAS}/\overline{SSADS}$, $\overline{SDRAS}/\overline{SSOE}$, and $\overline{SDWE}/\overline{SSWE}$ operate as $\overline{SSADS}$, $\overline{SSOE}$, and $\overline{SSWE}$, respectively, during SBSRAM accesses.
§ For the first write in a series of one or more consecutive adjacent writes, the write data is generated one CLKOUT2 cycle early to accommodate the ED enable time.

## SYNCHRONOUS-BURST MEMORY TIMING (CONTINUED)

### timing requirements for synchronous-burst SRAM cycles C6202B devices (see Figure 23)

| NO. | | | C6202B-250 | | C6202B-300 | | UNIT |
|---|---|---|---|---|---|---|---|
| | | | MIN | MAX | MIN | MAX | |
| 7 | $t_{su(EDV-CKO2H)}$ | Setup time, read EDx valid before CLKOUT2 high | 2.9 | | 1.6 | | ns |
| 8 | $t_{h(CKO2H-EDV)}$ | Hold time, read EDx valid after CLKOUT2 high | 2.1 | | 2.3 | | ns |

### switching characteristics over recommended operating conditions for synchronous-burst SRAM cycles for C6202B devices†‡ (see Figure 23 and Figure 24)

| NO. | PARAMETER | | C6202B-250 | | C6202B-300 | | UNIT |
|---|---|---|---|---|---|---|---|
| | | | MIN | MAX | MIN | MAX | |
| 1 | $t_{osu(CEV-CKO2H)}$ | Output setup time, $\overline{CEx}$ valid before CLKOUT2 high | P – 1.7 | | P – 1 | | ns |
| 2 | $t_{oh(CKO2H-CEV)}$ | Output hold time, $\overline{CEx}$ valid after CLKOUT2 high | P – 3.4 | | P – 2.7 | | ns |
| 3 | $t_{osu(BEV-CKO2H)}$ | Output setup time, $\overline{BEx}$ valid before CLKOUT2 high | P – 1.7 | | P – 1 | | ns |
| 4 | $t_{oh(CKO2H-BEIV)}$ | Output hold time, $\overline{BEx}$ invalid after CLKOUT2 high | P – 3.4 | | P – 2.7 | | ns |
| 5 | $t_{osu(EAV-CKO2H)}$ | Output setup time, EAx valid before CLKOUT2 high | P – 1.7 | | P – 1 | | ns |
| 6 | $t_{oh(CKO2H-EAIV)}$ | Output hold time, EAx invalid after CLKOUT2 high | P – 3.4 | | P – 2.7 | | ns |
| 9 | $t_{osu(ADSV-CKO2H)}$ | Output setup time, $\overline{SDCAS}/\overline{SSADS}$ valid before CLKOUT2 high | P – 1.7 | | P – 1 | | ns |
| 10 | $t_{oh(CKO2H-ADSV)}$ | Output hold time, $\overline{SDCAS}/\overline{SSADS}$ valid after CLKOUT2 high | P – 3.4 | | P – 2.7 | | ns |
| 11 | $t_{osu(OEV-CKO2H)}$ | Output setup time, $\overline{SDRAS}/\overline{SSOE}$ valid before CLKOUT2 high | P – 1.7 | | P – 1 | | ns |
| 12 | $t_{oh(CKO2H-OEV)}$ | Output hold time, $\overline{SDRAS}/\overline{SSOE}$ valid after CLKOUT2 high | P – 3.4 | | P – 2.7 | | ns |
| 13 | $t_{osu(EDV-CKO2H)}$ | Output setup time, EDx valid before CLKOUT2 high§ | P – 2.3 | | P – 1.6 | | ns |
| 14 | $t_{oh(CKO2H-EDIV)}$ | Output hold time, EDx invalid after CLKOUT2 high | P – 3.2 | | P – 2.5 | | ns |
| 15 | $t_{osu(WEV-CKO2H)}$ | Output setup time, $\overline{SDWE}/\overline{SSWE}$ valid before CLKOUT2 high | P – 1.7 | | P – 1 | | ns |
| 16 | $t_{oh(CKO2H-WEV)}$ | Output hold time, $\overline{SDWE}/\overline{SSWE}$ valid after CLKOUT2 high | P – 3.4 | | P – 2.7 | | ns |

† P = 1/CPU clock frequency in ns. For example, when running parts at 250 MHz, use P = 4 ns.
‡ $\overline{SDCAS}/\overline{SSADS}$, $\overline{SDRAS}/\overline{SSOE}$, and $\overline{SDWE}/\overline{SSWE}$ operate as $\overline{SSADS}$, $\overline{SSOE}$, and $\overline{SSWE}$, respectively, during SBSRAM accesses.
§ For the first write in a series of one or more consecutive adjacent writes, the write data is generated one CLKOUT2 cycle early to accommodate the ED enable time.

## SYNCHRONOUS-BURST MEMORY TIMING (CONTINUED)

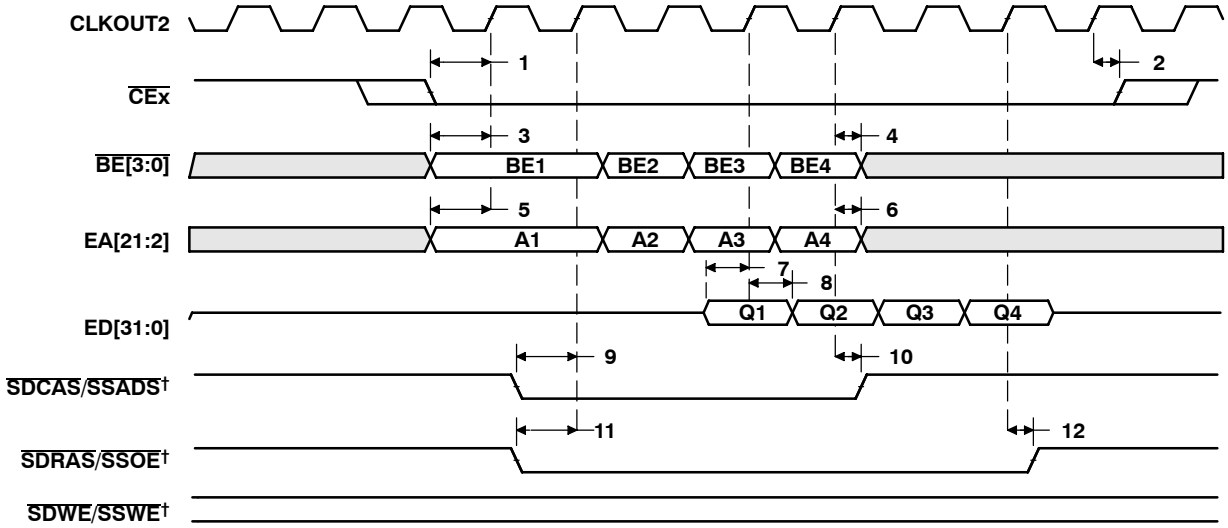


† SDCAS/SSADS, SDRAS/SSOE, and SDWE/SSWE operate as SSADS, SSOE, and SSWE, respectively, during SBSRAM accesses.

**Figure 23. SBSRAM Read Timing**

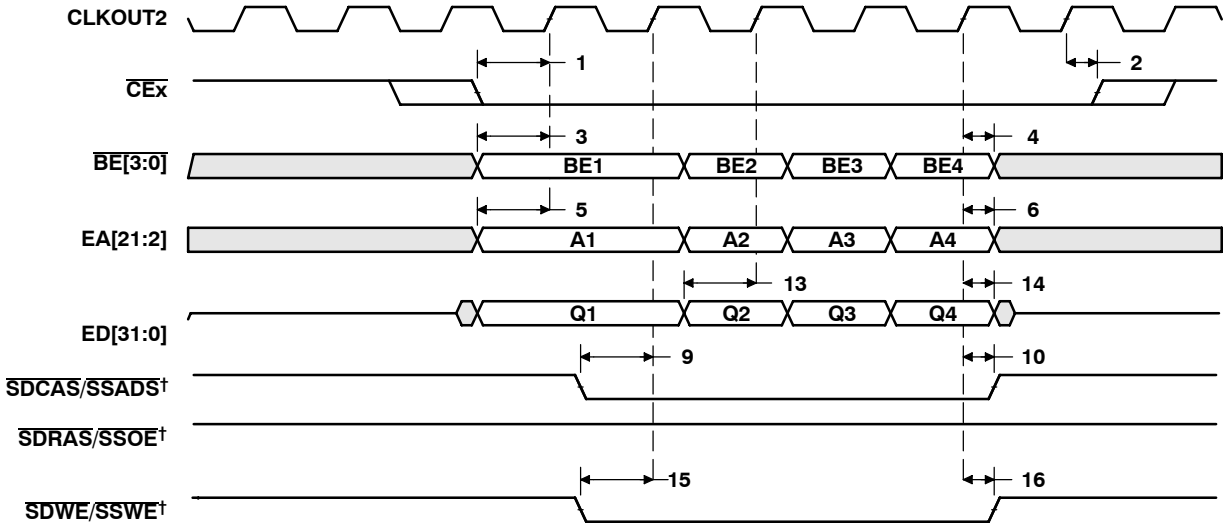


† SDCAS/SSADS, SDRAS/SSOE, and SDWE/SSWE operate as SSADS, SSOE, and SSWE, respectively, during SBSRAM accesses.

**Figure 24. SBSRAM Write Timing**

## SYNCHRONOUS DRAM TIMING

### timing requirements for synchronous DRAM cycles for C6202 devices (see Figure 25)

| NO. | | | C6202-200 | | C6202-250 | | UNIT |
|---|---|---|---|---|---|---|---|
| | | | MIN | MAX | MIN | MAX | |
| 7 | $t_{su(EDV-CKO2H)}$ | Setup time, read EDx valid before CLKOUT2 high | 1.2 | | 1.2 | | ns |
| 8 | $t_{h(CKO2H-EDV)}$ | Hold time, read EDx valid after CLKOUT2 high | 3 | | 2.7 | | ns |

### switching characteristics over recommended operating conditions for synchronous DRAM cycles for C6202 devices†‡ (see Figure 25–Figure 30)

| NO. | PARAMETER | | C6202-200 | | C6202-250 | | UNIT |
|---|---|---|---|---|---|---|---|
| | | | MIN | MAX | MIN | MAX | |
| 1 | $t_{osu(CEV-CKO2H)}$ | Output setup time, $\overline{CEx}$ valid before CLKOUT2 high | P – 1 | | P – 0.9 | | ns |
| 2 | $t_{oh(CKO2H-CEV)}$ | Output hold time, $\overline{CEx}$ valid after CLKOUT2 high | P – 3.5 | | P – 2.9 | | ns |
| 3 | $t_{osu(BEV-CKO2H)}$ | Output setup time, $\overline{BEx}$ valid before CLKOUT2 high | P – 1 | | P – 0.9 | | ns |
| 4 | $t_{oh(CKO2H-BEIV)}$ | Output hold time, $\overline{BEx}$ invalid after CLKOUT2 high | P – 3.5 | | P – 2.9 | | ns |
| 5 | $t_{osu(EAV-CKO2H)}$ | Output setup time, EAx valid before CLKOUT2 high | P – 1 | | P – 0.9 | | ns |
| 6 | $t_{oh(CKO2H-EAIV)}$ | Output hold time, EAx invalid after CLKOUT2 high | P – 3.5 | | P – 2.9 | | ns |
| 9 | $t_{osu(CASV-CKO2H)}$ | Output setup time, $\overline{SDCAS}/\overline{SSADS}$ valid before CLKOUT2 high | P – 1 | | P – 0.9 | | ns |
| 10 | $t_{oh(CKO2H-CASV)}$ | Output hold time, $\overline{SDCAS}/\overline{SSADS}$ valid after CLKOUT2 high | P – 3.5 | | P – 2.9 | | ns |
| 11 | $t_{osu(EDV-CKO2H)}$ | Output setup time, EDx valid before CLKOUT2 high§ | P – 1 | | P – 1.5 | | ns |
| 12 | $t_{oh(CKO2H-EDIV)}$ | Output hold time, EDx invalid after CLKOUT2 high | P – 3.5 | | P – 2.8 | | ns |
| 13 | $t_{osu(WEV-CKO2H)}$ | Output setup time, $\overline{SDWE}/\overline{SSWE}$ valid before CLKOUT2 high | P – 1 | | P – 0.9 | | ns |
| 14 | $t_{oh(CKO2H-WEV)}$ | Output hold time, $\overline{SDWE}/\overline{SSWE}$ valid after CLKOUT2 high | P – 3.5 | | P – 2.9 | | ns |
| 15 | $t_{osu(SDA10V-CKO2H)}$ | Output setup time, SDA10 valid before CLKOUT2 high | P – 1 | | P – 0.9 | | ns |
| 16 | $t_{oh(CKO2H-SDA10IV)}$ | Output hold time, SDA10 invalid after CLKOUT2 high | P – 3.5 | | P – 2.9 | | ns |
| 17 | $t_{osu(RASV-CKO2H)}$ | Output setup time, $\overline{SDRAS}/\overline{SSOE}$ valid before CLKOUT2 high | P – 1 | | P – 0.9 | | ns |
| 18 | $t_{oh(CKO2H-RASV)}$ | Output hold time, $\overline{SDRAS}/\overline{SSOE}$ valid after CLKOUT2 high | P – 3.5 | | P – 2.9 | | ns |

† P = 1/CPU clock frequency in ns. For example, when running parts at 250 MHz, use P = 4 ns.
‡ $\overline{SDCAS}/\overline{SSADS}$, $\overline{SDRAS}/\overline{SSOE}$, and $\overline{SDWE}/\overline{SSWE}$ operate as $\overline{SDCAS}$, $\overline{SDRAS}$, and $\overline{SDWE}$, respectively, during SDRAM accesses.
§ For the first write in a series of one or more consecutive adjacent writes, the write data is generated one CLKOUT2 cycle early to accommodate the ED enable time.

## SYNCHRONOUS DRAM TIMING (CONTINUED)

### timing requirements for synchronous DRAM cycles for C6202B devices (see Figure 25)

| NO. | | | C6202B-250 | | C6202B-300 | | UNIT |
|---|---|---|---|---|---|---|---|
| | | | MIN | MAX | MIN | MAX | |
| 7 | $t_{su(EDV-CKO2H)}$ | Setup time, read EDx valid before CLKOUT2 high | 1.3 | | 0 | | ns |
| 8 | $t_{h(CKO2H-EDV)}$ | Hold time, read EDx valid after CLKOUT2 high | 2.3 | | 2.3 | | ns |

### switching characteristics over recommended operating conditions for synchronous DRAM cycles for C6202B devices†‡ (see Figure 25–Figure 30)

| NO. | PARAMETER | | C6202B-250 | | C6202B-300 | | UNIT |
|---|---|---|---|---|---|---|---|
| | | | MIN | MAX | MIN | MAX | |
| 1 | $t_{osu(CEV-CKO2H)}$ | Output setup time, $\overline{CEx}$ valid before CLKOUT2 high | P – 1.7 | | P – 1 | | ns |
| 2 | $t_{oh(CKO2H-CEV)}$ | Output hold time, $\overline{CEx}$ valid after CLKOUT2 high | P – 3 | | P – 2.3 | | ns |
| 3 | $t_{osu(BEV-CKO2H)}$ | Output setup time, $\overline{BEx}$ valid before CLKOUT2 high | P – 1.7 | | P – 1 | | ns |
| 4 | $t_{oh(CKO2H-BEIV)}$ | Output hold time, $\overline{BEx}$ invalid after CLKOUT2 high | P – 3 | | P – 2.3 | | ns |
| 5 | $t_{osu(EAV-CKO2H)}$ | Output setup time, EAx valid before CLKOUT2 high | P – 1.7 | | P – 1 | | ns |
| 6 | $t_{oh(CKO2H-EAIV)}$ | Output hold time, EAx invalid after CLKOUT2 high | P – 3 | | P – 2.3 | | ns |
| 9 | $t_{osu(CASV-CKO2H)}$ | Output setup time, $\overline{SDCAS}/\overline{SSADS}$ valid before CLKOUT2 high | P – 1.7 | | P – 1 | | ns |
| 10 | $t_{oh(CKO2H-CASV)}$ | Output hold time, $\overline{SDCAS}/\overline{SSADS}$ valid after CLKOUT2 high | P – 3 | | P – 2.3 | | ns |
| 11 | $t_{osu(EDV-CKO2H)}$ | Output setup time, EDx valid before CLKOUT2 high§ | P – 2.3 | | P – 1.6 | | ns |
| 12 | $t_{oh(CKO2H-EDIV)}$ | Output hold time, EDx invalid after CLKOUT2 high | P – 2.7 | | P – 2 | | ns |
| 13 | $t_{osu(WEV-CKO2H)}$ | Output setup time, $\overline{SDWE}/\overline{SSWE}$ valid before CLKOUT2 high | P – 1.7 | | P – 1 | | ns |
| 14 | $t_{oh(CKO2H-WEV)}$ | Output hold time, $\overline{SDWE}/\overline{SSWE}$ valid after CLKOUT2 high | P – 3 | | P – 2.3 | | ns |
| 15 | $t_{osu(SDA10V-CKO2H)}$ | Output setup time, SDA10 valid before CLKOUT2 high | P – 1.7 | | P – 1 | | ns |
| 16 | $t_{oh(CKO2H-SDA10IV)}$ | Output hold time, SDA10 invalid after CLKOUT2 high | P – 3 | | P – 2.3 | | ns |
| 17 | $t_{osu(RASV-CKO2H)}$ | Output setup time, $\overline{SDRAS}/\overline{SSOE}$ valid before CLKOUT2 high | P – 1.7 | | P – 1 | | ns |
| 18 | $t_{oh(CKO2H-RASV)}$ | Output hold time, $\overline{SDRAS}/\overline{SSOE}$ valid after CLKOUT2 high | P – 3 | | P – 2.3 | | ns |

† P = 1/CPU clock frequency in ns. For example, when running parts at 250 MHz, use P = 4 ns.
‡ $\overline{SDCAS}/\overline{SSADS}$, $\overline{SDRAS}/\overline{SSOE}$, and $\overline{SDWE}/\overline{SSWE}$ operate as $\overline{SDCAS}$, $\overline{SDRAS}$, and $\overline{SDWE}$, respectively, during SDRAM accesses.
§ For the first write in a series of one or more consecutive adjacent writes, the write data is generated one CLKOUT2 cycle early to accommodate the ED enable time.

## SYNCHRONOUS DRAM TIMING (CONTINUED)

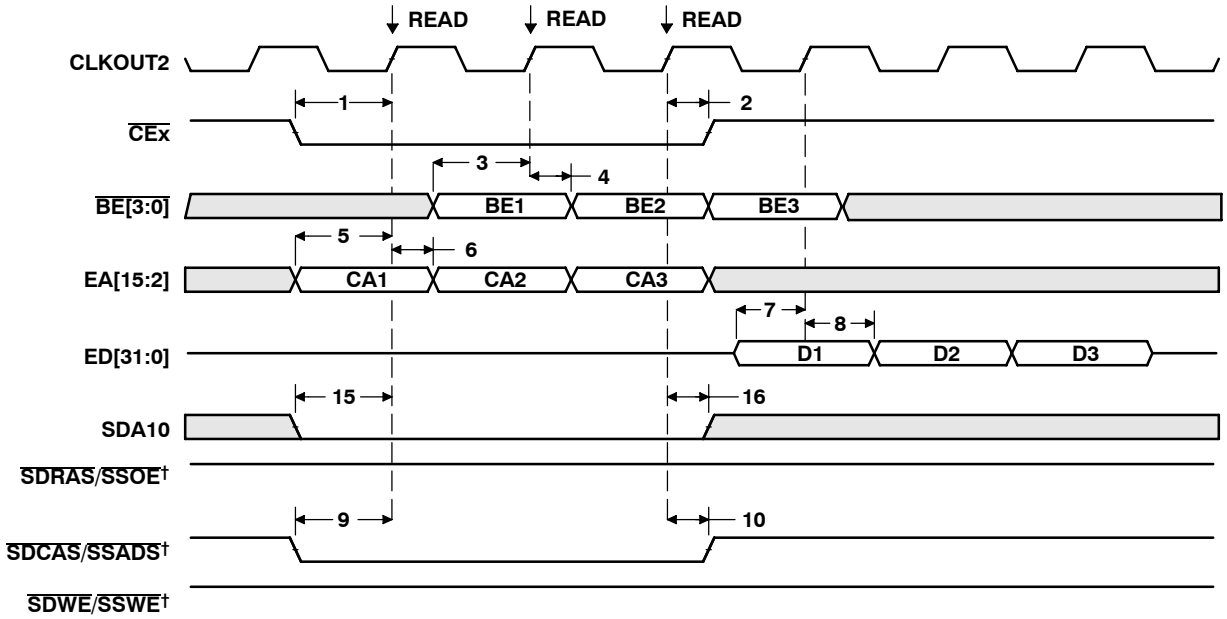


† $\overline{\text{SDCAS}}$/$\overline{\text{SSADS}}$, $\overline{\text{SDRAS}}$/$\overline{\text{SSOE}}$, and $\overline{\text{SDWE}}$/$\overline{\text{SSWE}}$ operate as $\overline{\text{SDCAS}}$, $\overline{\text{SDRAS}}$, and $\overline{\text{SDWE}}$, respectively, during SDRAM accesses.

**Figure 25. Three SDRAM READ Commands**

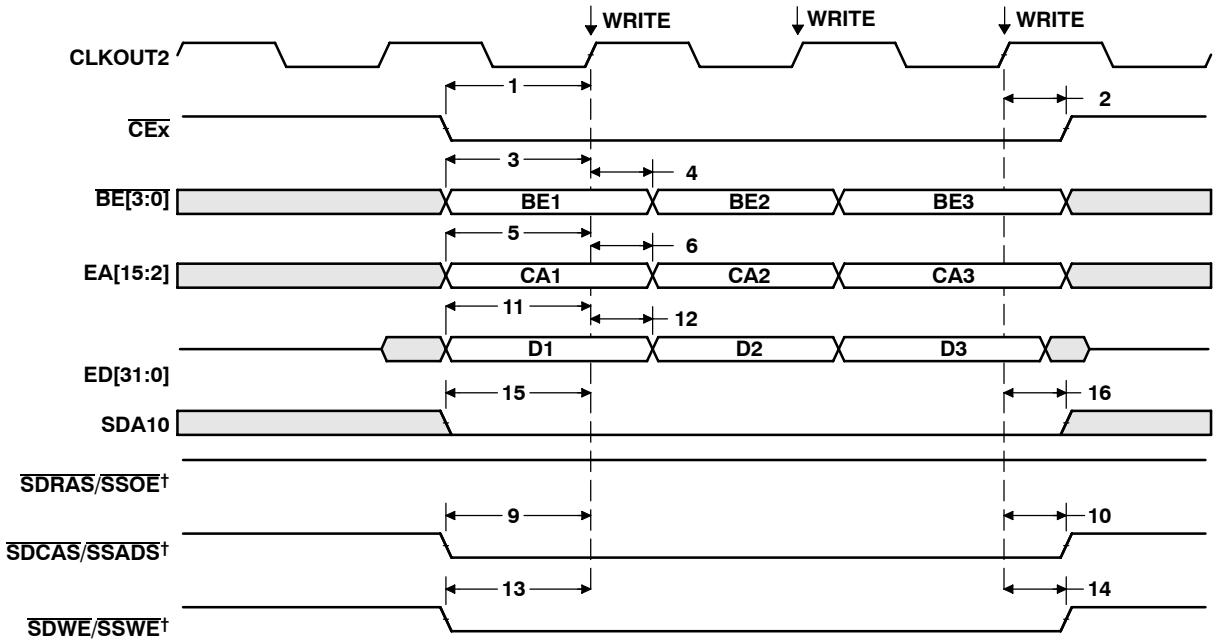


† $\overline{\text{SDCAS}}$/$\overline{\text{SSADS}}$, $\overline{\text{SDRAS}}$/$\overline{\text{SSOE}}$, and $\overline{\text{SDWE}}$/$\overline{\text{SSWE}}$ operate as $\overline{\text{SDCAS}}$, $\overline{\text{SDRAS}}$, and $\overline{\text{SDWE}}$, respectively, during SDRAM accesses.

**Figure 26. Three SDRAM WRT Commands**

## SYNCHRONOUS DRAM TIMING (CONTINUED)

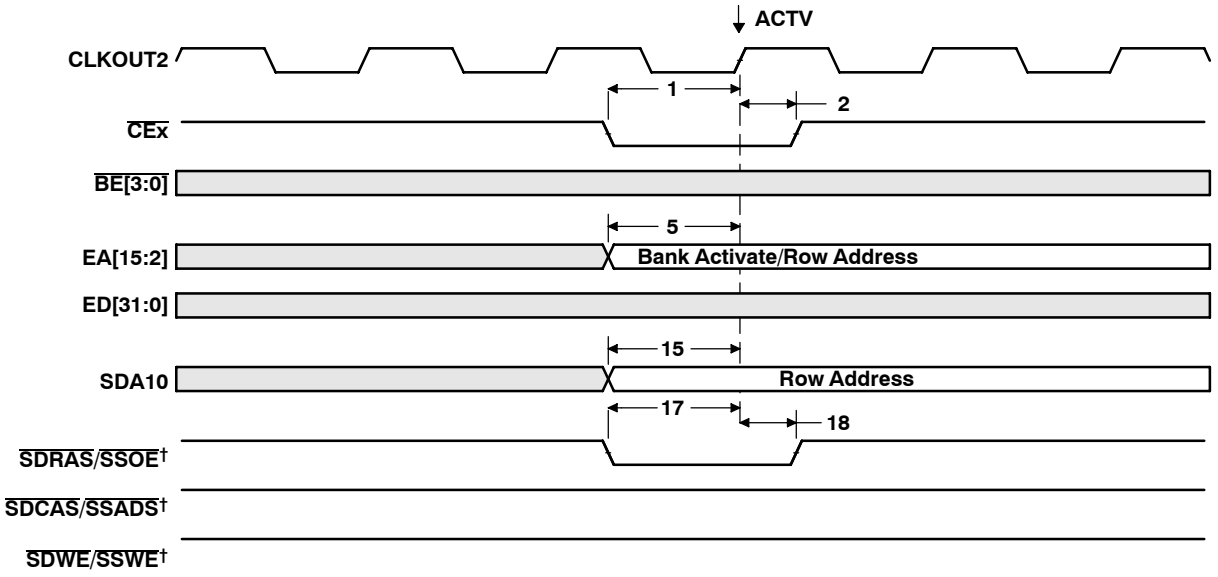


† SDCAS/SSADS, SDRAS/SSOE, and SDWE/SSWE operate as SDCAS, SDRAS, and SDWE, respectively, during SDRAM accesses.

**Figure 27. SDRAM ACTV Command**

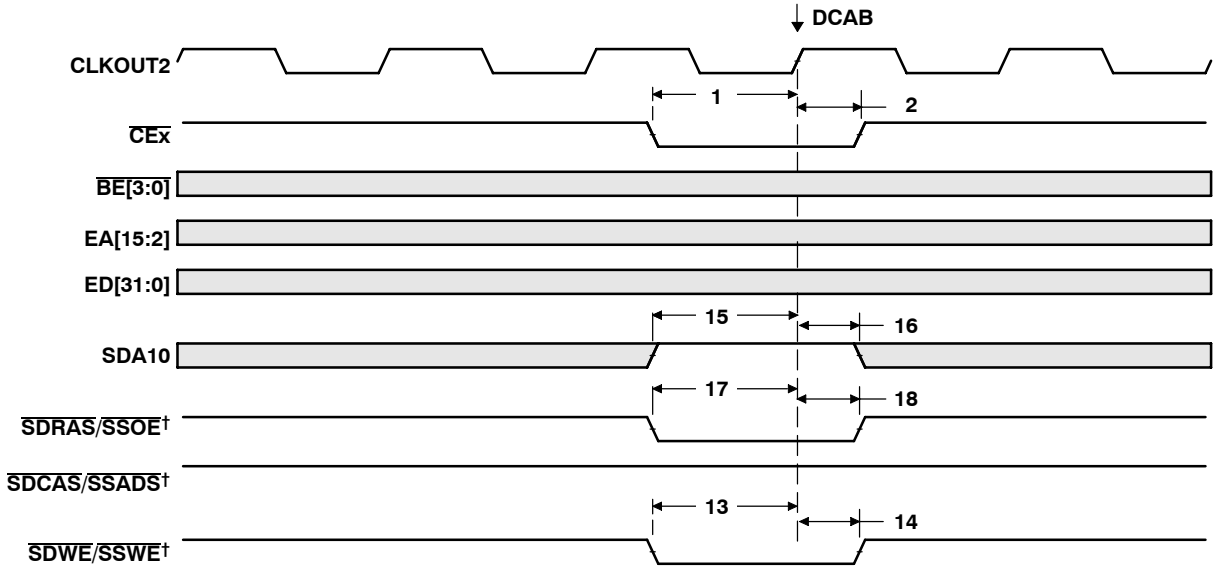


† SDCAS/SSADS, SDRAS/SSOE, and SDWE/SSWE operate as SDCAS, SDRAS, and SDWE, respectively, during SDRAM accesses.

**Figure 28. SDRAM DCAB Command**

## SYNCHRONOUS DRAM TIMING (CONTINUED)

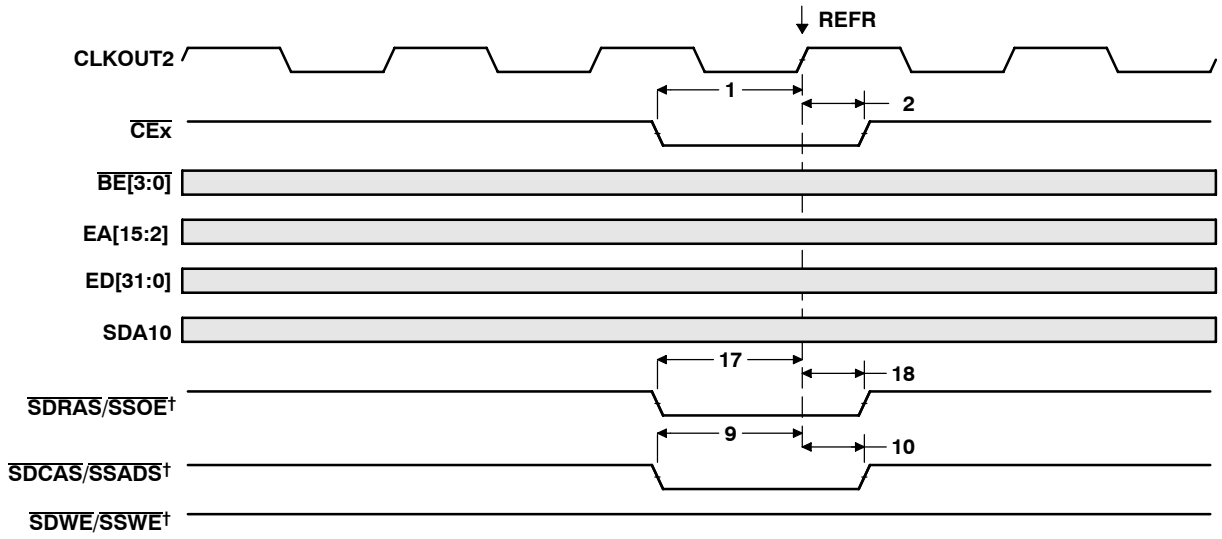


† SDCAS/SSADS, SDRAS/SSOE, and SDWE/SSWE operate as SDCAS, SDRAS, and SDWE, respectively, during SDRAM accesses.

**Figure 29. SDRAM REFR Command**

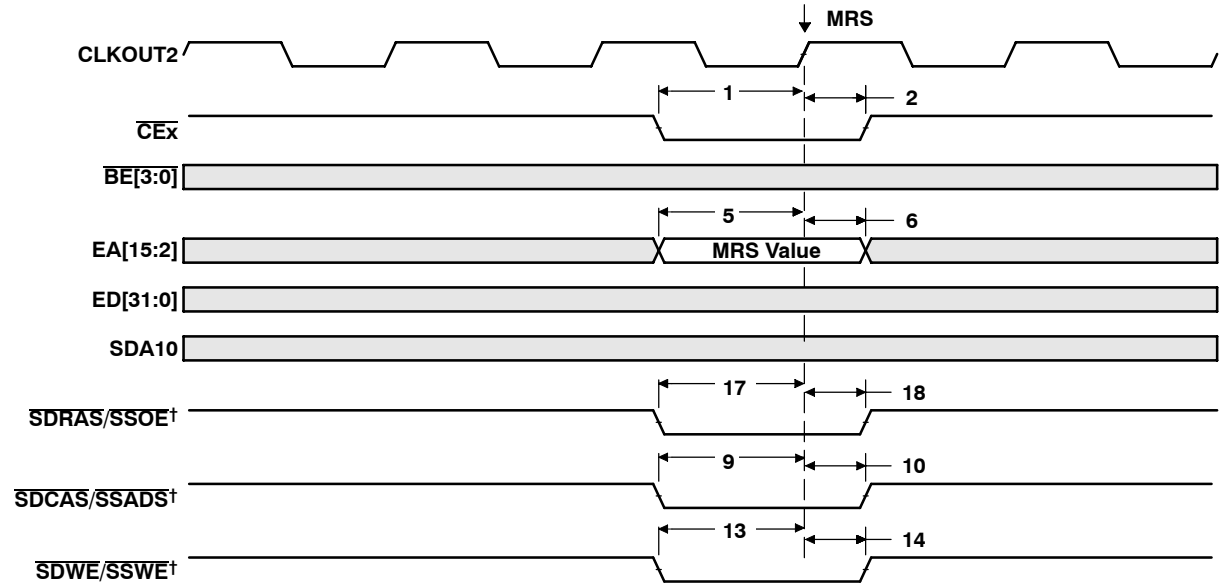


† SDCAS/SSADS, SDRAS/SSOE, and SDWE/SSWE operate as SDCAS, SDRAS, and SDWE, respectively, during SDRAM accesses.

**Figure 30. SDRAM MRS Command**

## $\overline{\text{HOLD}}$/$\overline{\text{HOLDA}}$ TIMING

### timing requirements for the $\overline{\text{HOLD}}$/$\overline{\text{HOLDA}}$ cycles† (see Figure 31)

| NO. | | | C6202-200 C6202-250 C6202B-250 C6202B-300 | | UNIT |
|---|---|---|---|---|---|
| | | | MIN | MAX | |
| 3 | $t_{oh(HOLDAL-HOLDL)}$ | Output hold time, $\overline{\text{HOLD}}$ low after $\overline{\text{HOLDA}}$ low | P | | ns |

† P = 1/CPU clock frequency in ns. For example, when running parts at 250 MHz, use P = 4 ns.

### switching characteristics over recommended operating conditions for the $\overline{\text{HOLD}}$/$\overline{\text{HOLDA}}$ cycles†‡ (see Figure 31)

| NO. | PARAMETER | | C6202-200 C6202-250 C6202B-250 C6202B-300 | | UNIT |
|---|---|---|---|---|---|
| | | | MIN | MAX | |
| 1 | $t_{d(HOLDL-EMHZ)}$ | Delay time, $\overline{\text{HOLD}}$ low to EMIF Bus high impedance | 3P | § | ns |
| 2 | $t_{d(EMHZ-HOLDAL)}$ | Delay time, EMIF Bus high impedance to $\overline{\text{HOLDA}}$ low | 0 | 2P | ns |
| 4 | $t_{d(HOLDH-EMLZ)}$ | Delay time, $\overline{\text{HOLD}}$ high to EMIF Bus low impedance | 3P | 7P | ns |
| 5 | $t_{d(EMLZ-HOLDAH)}$ | Delay time, EMIF Bus low impedance to $\overline{\text{HOLDA}}$ high | 0 | 2P | ns |

† P = 1/CPU clock frequency in ns. For example, when running parts at 250 MHz, use P = 4 ns.
‡ EMIF Bus consists of $\overline{\text{CE}}$[3:0], $\overline{\text{BE}}$[3:0], ED[31:0], EA[21:2], $\overline{\text{ARE}}$, $\overline{\text{AOE}}$, $\overline{\text{AWE}}$, $\overline{\text{SDCAS}}$/$\overline{\text{SSADS}}$, $\overline{\text{SDRAS}}$/$\overline{\text{SSOE}}$, $\overline{\text{SDWE}}$/$\overline{\text{SSWE}}$, and SDA10.
§ All pending EMIF transactions are allowed to complete before $\overline{\text{HOLDA}}$ is asserted. The worst case for this is an asynchronous read or write with external ARDY used or a minimum of eight consecutive SDRAM reads or writes when RBTR8 = 1. If no bus transactions are occurring, then the minimum delay time can be achieved. Also, bus hold can be indefinitely delayed by setting NOHOLD = 1.

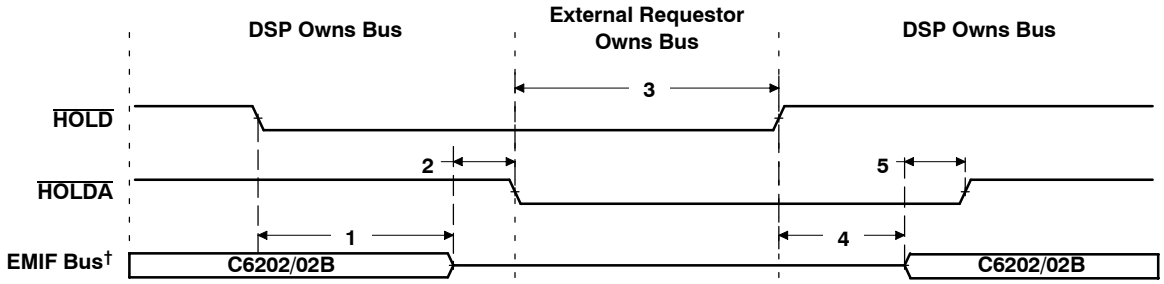


† EMIF Bus consists of $\overline{\text{CE}}$[3:0], $\overline{\text{BE}}$[3:0], ED[31:0], EA[21:2], $\overline{\text{ARE}}$, $\overline{\text{AOE}}$, $\overline{\text{AWE}}$, $\overline{\text{SDCAS}}$/$\overline{\text{SSADS}}$, $\overline{\text{SDRAS}}$/$\overline{\text{SSOE}}$, $\overline{\text{SDWE}}$/$\overline{\text{SSWE}}$, and SDA10.

**Figure 31. $\overline{\text{HOLD}}$/$\overline{\text{HOLDA}}$ Timing**

## RESET TIMING

### timing requirements for reset† (see Figure 32)

| NO. | | | C6202-200 C6202-250 C6202B-250 C6202B-300 MIN | MAX | UNIT |
|---|---|---|---|---|---|
| 1 | $t_{w(RST)}$ | Width of the $\overline{RESET}$ pulse (PLL stable)‡ | 10P | | ns |
| | | Width of the $\overline{RESET}$ pulse (PLL needs to sync up)§ | 250 | | μs |
| 10 | $t_{su(XD)}$ | Setup time, XD configuration bits valid before $\overline{RESET}$ high¶ | 5P | | ns |
| 11 | $t_{h(XD)}$ | Hold time, XD configuration bits valid after $\overline{RESET}$ high¶ | 5P | | ns |

† P = 1/CPU clock frequency in ns. For example, when running parts at 250 MHz, use P = 4 ns.
‡ This parameter applies to CLKMODE x1 when CLKIN is stable, and applies to CLKMODE x4 only when CLKIN and PLL are stable for C6202. This parameter applies to CLKMODE x4, x6, x7, x8, x9, x10, and x11 when CLKIN and PLL are stable for C6202B GNY devices. This parameter applies to CLKMODE x4, x6, x8, and x10 only when CLKIN and PLL are stable for C6202B GNZ devices.
§ This parameter applies to CLKMODE x4 only (it does not apply to CLKMODE x1) for C6202. This parameter applies to CLKMODE x4, x6, x7, x8, x9, x10, and x11 only (it does not apply to CLKMODE x1) for C6202B GNY devices. This parameter applies to CLKMODE x4, x6, x8, and x10 only (it does not apply to CLKMODE x1) for C6202B GNZ devices. The $\overline{RESET}$ signal is not connected internally to the clock PLL circuit. The PLL, however, may need up to 250 μs to stabilize following device power up or after PLL configuration has been changed. During that time, $\overline{RESET}$ must be asserted to ensure proper device operation. See the Clock PLL section for PLL lock times.
¶ XD[31:0] are the boot configuration pins during device reset.

### switching characteristics over recommended operating conditions during reset†# (see Figure 32)

| NO. | PARAMETER | | C6202-200 C6202-250 C6202B-250 C6202B-300 MIN | MAX | UNIT |
|---|---|---|---|---|---|
| 2 | $t_{d(RSTL-CKO2IV)}$ | Delay time, $\overline{RESET}$ low to CLKOUT2 invalid | P | | ns |
| 3 | $t_{d(RSTH-CKO2V)}$ | Delay time, $\overline{RESET}$ high to CLKOUT2 valid | | 4P | ns |
| 4 | $t_{d(RSTL-HIGHIV)}$ | Delay time, $\overline{RESET}$ low to high group invalid | P | | ns |
| 5 | $t_{d(RSTH-HIGHV)}$ | Delay time, $\overline{RESET}$ high to high group valid | | 4P | ns |
| 6 | $t_{d(RSTL-LOWIV)}$ | Delay time, $\overline{RESET}$ low to low group invalid | P | | ns |
| 7 | $t_{d(RSTH-LOWV)}$ | Delay time, $\overline{RESET}$ high to low group valid | | 4P | ns |
| 8 | $t_{d(RSTL-ZHZ)}$ | Delay time, $\overline{RESET}$ low to Z group high impedance | P | | ns |
| 9 | $t_{d(RSTH-ZV)}$ | Delay time, $\overline{RESET}$ high to Z group valid | | 4P | ns |

† P = 1/CPU clock frequency in ns. For example, when running parts at 250 MHz, use P = 4 ns.
# High group consists of: XFCLK, $\overline{HOLDA}$
Low group consists of: IACK, INUM[3:0], DMAC[3:0], PD, TOUT0, and TOUT1
Z group consists of: EA[21:2], ED[31:0], $\overline{CE}$[3:0], $\overline{BE}$[3:0], $\overline{ARE}$, $\overline{AWE}$, $\overline{AOE}$, $\overline{SDCAS}$/$\overline{SSADS}$, $\overline{SDRAS}$/$\overline{SSOE}$, $\overline{SDWE}$/$\overline{SSWE}$, SDA10, CLKX0, CLKX1, CLKX2, FSX0, FSX1, FSX2, DX0, DX1, DX2, CLKR0, CLKR1, CLKR2, FSR0, FSR1, FSR2, $\overline{XCE}$[3:0], $\overline{XBE}$[3:0]/XA[5:2], $\overline{XOE}$, $\overline{XRE}$, $\overline{XWE}$/$\overline{XWAIT}$, $\overline{XAS}$, XW/R, XRDY, XBLAST, XHOLD, and XHOLDA

## RESET TIMING (CONTINUED)

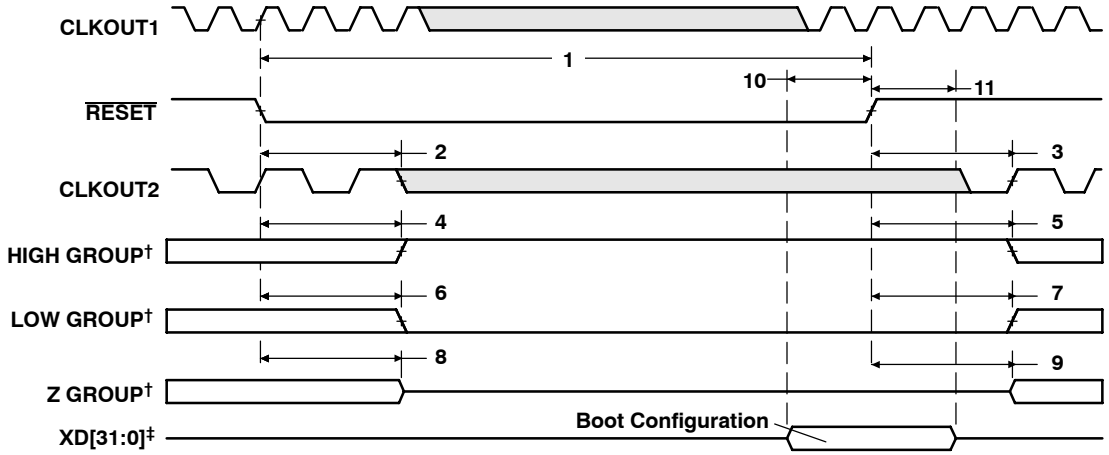


† High group consists of: XFCLK, $\overline{\text{HOLDA}}$
Low group consists of: IACK, INUM[3:0], DMAC[3:0], PD, TOUT0, and TOUT1.
Z group consists of: EA[21:2], ED[31:0], $\overline{\text{CE}}$[3:0], $\overline{\text{BE}}$[3:0], $\overline{\text{ARE}}$, $\overline{\text{AWE}}$, $\overline{\text{AOE}}$, $\overline{\text{SDCAS}}$/$\overline{\text{SSADS}}$, $\overline{\text{SDRAS}}$/$\overline{\text{SSOE}}$, $\overline{\text{SDWE}}$/$\overline{\text{SSWE}}$, SDA10, CLKX0, CLKX1, CLKX2, FSX0, FSX1, FSX2, DX0, DX1, DX2, CLKR0, CLKR1, CLKR2, FSR0, FSR1, FSR2, $\overline{\text{XCE}}$[3:0], $\overline{\text{XBE}}$[3:0]/XA[5:2], $\overline{\text{XOE}}$, $\overline{\text{XRE}}$, $\overline{\text{XWE}}$/$\overline{\text{XWAIT}}$, $\overline{\text{XAS}}$, XW/R, XRDY, XBLAST, XHOLD, and XHOLDA.

‡ XD[31:0] are the boot configuration pins during device reset.

**Figure 32. Reset Timing**

## EXTERNAL INTERRUPT TIMING

### timing requirements for interrupt response cycles† (see Figure 33)

| NO. | | | C6202-200 C6202-250 C6202B-250 C6202B-300 | | UNIT |
|---|---|---|---|---|---|
| | | | MIN | MAX | |
| 2 | $t_{w(ILOW)}$ | Width of the interrupt pulse low | 2P | | ns |
| 3 | $t_{w(IHIGH)}$ | Width of the interrupt pulse high | 2P | | ns |

† P = 1/CPU clock frequency in ns. For example, when running parts at 250 MHz, use P = 4 ns.

### switching characteristics over recommended operating conditions during interrupt response cycles† (see Figure 33)

| NO. | PARAMETER | | C6202-200 C6202-250 | | C6202B-250 C6202B-300 | | UNIT |
|---|---|---|---|---|---|---|---|
| | | | MIN | MAX | MIN | MAX | |
| 1 | $t_{R(EINTH - IACKH)}$ | Response time, EXT_INTx high to IACK high | 9P | | 9P | | ns |
| 4 | $t_{d(CKO2L-IACKV)}$ | Delay time, CLKOUT2 low to IACK valid | 1 | 10 | –1.5 | 10 | ns |
| 5 | $t_{d(CKO2L-INUMV)}$ | Delay time, CLKOUT2 low to INUMx valid | 0 | 10 | –2.0 | 10 | ns |
| 6 | $t_{d(CKO2L-INUMIV)}$ | Delay time, CLKOUT2 low to INUMx invalid | 0 | 10 | –2.0 | 10 | ns |

† P = 1/CPU clock frequency in ns. For example, when running parts at 250 MHz, use P = 4 ns.

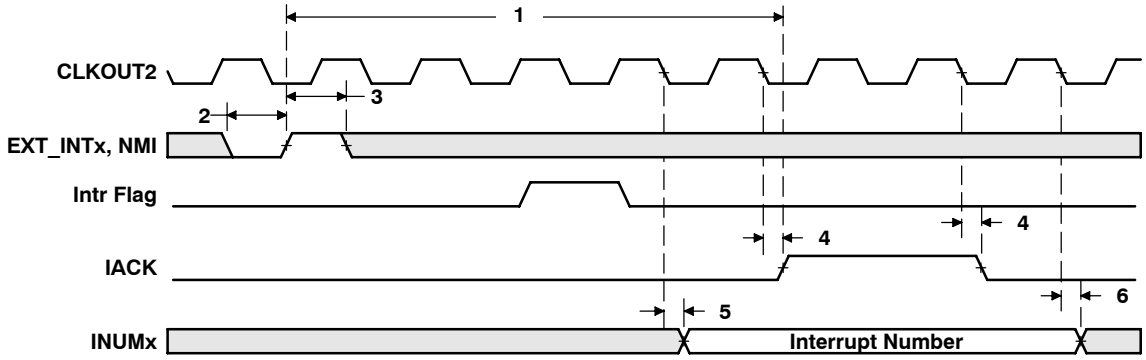


**Figure 33. Interrupt Timing**

## EXPANSION BUS SYNCHRONOUS FIFO TIMING

### timing requirements for synchronous FIFO interface (see Figure 34, Figure 35, and Figure 36)

| NO. | | | C6202-200 C6202-250 | | C6202B-250 C6202B-300 | | UNIT |
|---|---|---|---|---|---|---|---|
| | | | MIN | MAX | MIN | MAX | |
| 5 | $t_{su(XDV-XFCKH)}$ | Setup time, read XDx valid before XFCLK high | 3 | | 3 | | ns |
| 6 | $t_{h(XFCKH-XDV)}$ | Hold time, read XDx valid after XFCLK high | 2.5 | | 2.5 | | ns |

### switching characteristics over recommended operating conditions for synchronous FIFO interface (see Figure 34, Figure 35, and Figure 36)

| NO. | PARAMETER | | C6202-200 C6202-250 | | C6202B-250 C6202B-300 | | UNIT |
|---|---|---|---|---|---|---|---|
| | | | MIN | MAX | MIN | MAX | |
| 1 | $t_{d(XFCKH-XCEV)}$ | Delay time, XFCLK high to $\overline{XCEx}$ valid | 1.5 | 5.2 | 1.5 | 5.5 | ns |
| 2 | $t_{d(XFCKH-XAV)}$ | Delay time, XFCLK high to $\overline{XBE[3:0]}$/XA[5:2] valid† | 1.5 | 5.2 | 1.5 | 5.5 | ns |
| 3 | $t_{d(XFCKH-XOEV)}$ | Delay time, XFCLK high to $\overline{XOE}$ valid | 1.5 | 5.2 | 1.5 | 5.5 | ns |
| 4 | $t_{d(XFCKH-XREV)}$ | Delay time, XFCLK high to $\overline{XRE}$ valid | 1.5 | 5.2 | 1.5 | 5.5 | ns |
| 7 | $t_{d(XFCKH-XWEV)}$ | Delay time, XFCLK high to $\overline{XWE}$/$\overline{XWAIT}$‡ valid | 1.5 | 5.2 | 1.5 | 5.5 | ns |
| 8 | $t_{d(XFCKH-XDV)}$ | Delay time, XFCLK high to XDx valid | | 5.2 | | 6 | ns |
| 9 | $t_{d(XFCKH-XDIV)}$ | Delay time, XFCLK high to XDx invalid | 1.5 | | 1.5 | | ns |

† $\overline{XBE[3:0]}$/XA[5:2] operate as address signals XA[5:2] during synchronous FIFO accesses.
‡ $\overline{XWE}$/$\overline{XWAIT}$ operates as the write-enable signal $\overline{XWE}$ during synchronous FIFO accesses.

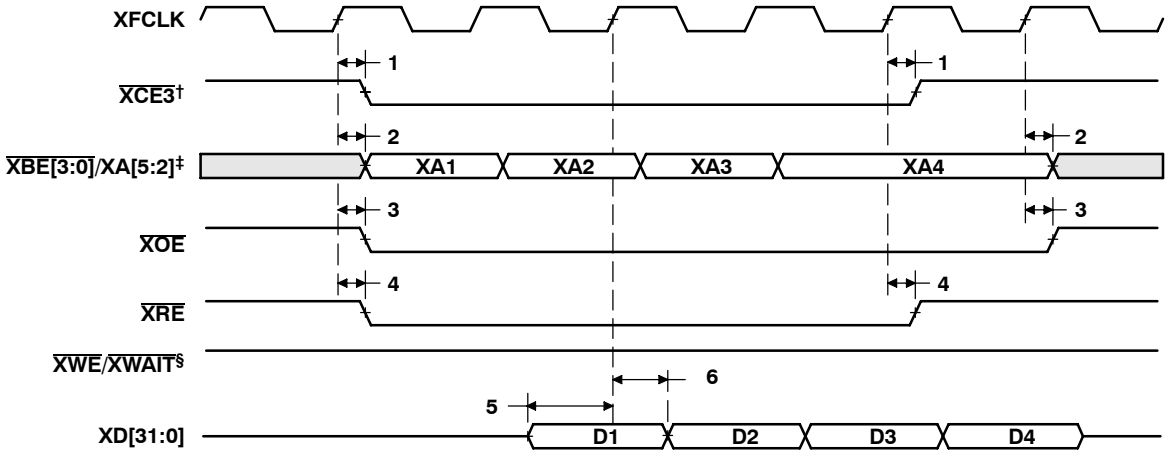


† FIFO read (glueless) mode only available in $\overline{XCE3}$.
‡ $\overline{XBE[3:0]}$/XA[5:2] operate as address signals XA[5:2] during synchronous FIFO accesses.
§ $\overline{XWE}$/$\overline{XWAIT}$ operates as the write-enable signal $\overline{XWE}$ during synchronous FIFO accesses.

**Figure 34. FIFO Read Timing (Glueless Read Mode)**

## EXPANSION BUS SYNCHRONOUS FIFO TIMING (CONTINUED)

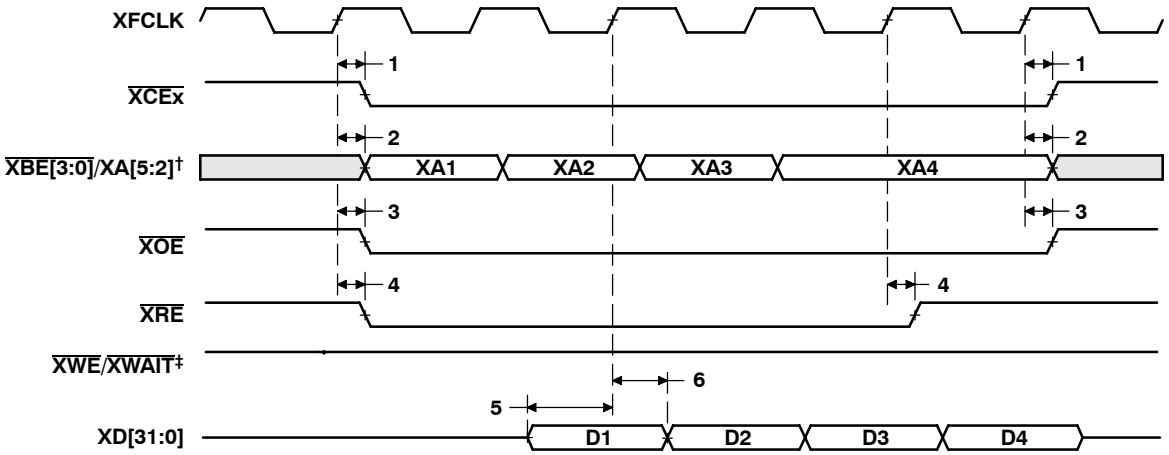


† $\overline{\text{XBE[3:0]}}$/XA[5:2] operate as address signals XA[5:2] during synchronous FIFO accesses.
‡ $\overline{\text{XWE}}$/$\overline{\text{XWAIT}}$ operates as the write-enable signal $\overline{\text{XWE}}$ during synchronous FIFO accesses.

**Figure 35. FIFO Read Timing**

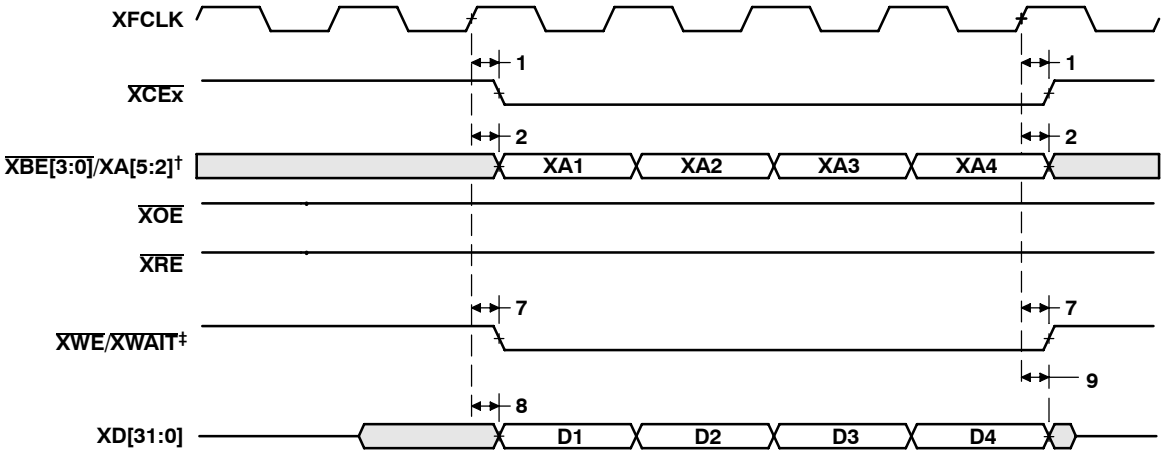


† $\overline{\text{XBE[3:0]}}$/XA[5:2] operate as address signals XA[5:2] during synchronous FIFO accesses.
‡ $\overline{\text{XWE}}$/$\overline{\text{XWAIT}}$ operates as the write-enable signal $\overline{\text{XWE}}$ during synchronous FIFO accesses.

**Figure 36. FIFO Write Timing**

## EXPANSION BUS ASYNCHRONOUS PERIPHERAL TIMING

### timing requirements for asynchronous peripheral cycles†‡§¶ (see Figure 37–Figure 40)

| NO. | | | C6202-200 C6202-250 | | C6202B-250 C6202B-300 | | UNIT |
|---|---|---|---|---|---|---|---|
| | | | MIN | MAX | MIN | MAX | |
| 3 | $t_{su(XDV-XREH)}$ | Setup time, XDx valid before $\overline{XRE}$ high | 4.5 | | 4.5 | | ns |
| 4 | $t_{h(XREH-XDV)}$ | Hold time, XDx valid after $\overline{XRE}$ high | 1 | | 2.5 | | ns |
| 6 | $t_{su(XRDYH-XREL)}$ | Setup time, XRDY high before $\overline{XRE}$ low | –[(RST – 3) * P – 6] | | –[(RST – 3) * P – 6] | | ns |
| 7 | $t_{h(XREL-XRDYH)}$ | Hold time, XRDY high after $\overline{XRE}$ low | (RST – 3) * P + 2 | | (RST – 3) * P + 2 | | ns |
| 9 | $t_{su(XRDYL-XREL)}$ | Setup time, XRDY low before $\overline{XRE}$ low | –[(RST – 3) * P – 6] | | –[(RST – 3) * P – 6] | | ns |
| 10 | $t_{h(XREL-XRDYL)}$ | Hold time, XRDY low after $\overline{XRE}$ low | (RST – 3) * P + 2 | | (RST – 3) * P + 2 | | ns |
| 11 | $t_{w(XRDYH)}$ | Pulse width, XRDY high | 2P | | 2P | | ns |
| 15 | $t_{su(XRDYH-XWEL)}$ | Setup time, XRDY high before $\overline{XWE}$ low | –[(WST – 3) * P – 6] | | –[(WST – 3) * P – 6] | | ns |
| 16 | $t_{h(XWEL-XRDYH)}$ | Hold time, XRDY high after $\overline{XWE}$ low | (WST – 3) * P + 2 | | (WST – 3) * P + 2 | | ns |
| 18 | $t_{su(XRDYL-XWEL)}$ | Setup time, XRDY low before $\overline{XWE}$ low | –[(WST – 3) * P – 6] | | –[(WST – 3) * P – 6] | | ns |
| 19 | $t_{h(XWEL-XRDYL)}$ | Hold time, XRDY low after $\overline{XWE}$ low | (WST – 3) * P + 2 | | (WST – 3) * P + 2 | | ns |

† To ensure data setup time, simply program the strobe width wide enough. XRDY is internally synchronized. If XRDY does meet setup or hold time, it may be recognized in the current cycle or the next cycle. Therefore, XRDY can be an asynchronous input.
‡ RS = Read Setup, RST = Read Strobe, RH = Read Hold, WS = Write Setup, WST = Write Strobe, WH = Write Hold. These parameters are programmed via the XBUS XCE space control registers.
§ P = 1/CPU clock frequency in ns. For example, when running parts at 250 MHz, use P = 4 ns.
¶ The sum of RS and RST (or WS and WST) must be a minimum of 4 in order to use XRDY input to extend strobe width.

## EXPANSION BUS ASYNCHRONOUS PERIPHERAL TIMING (CONTINUED)

### switching characteristics over recommended operating conditions for asynchronous peripheral cycles †‡§¶ (see Figure 37–Figure 40)

| NO. | PARAMETER | | C6202-200 C6202-250 | | | C6202B-250 C6202B-300 | | | UNIT |
|---|---|---|---|---|---|---|---|---|---|
| | | | MIN | TYP | MAX | MIN | TYP | MAX | |
| 1 | $t_{osu(SELV-XREL)}$ | Output setup time, select signals valid to $\overline{XRE}$ low | RS * P – 2 | | | RS * P – 2 | | | ns |
| 2 | $t_{oh(XREH-SELIV)}$ | Output hold time, $\overline{XRE}$ low to select signals invalid | RH * P – 2 | | | RH * P – 2 | | | ns |
| 5 | $t_{w(XREL)}$ | Pulse width, $\overline{XRE}$ low | | RST * P | | | RST * P | | ns |
| 8 | $t_{d(XRDYH-XREH)}$ | Delay time, XRDY high to $\overline{XRE}$ high | 3P | | 4P + 5 | 3P | | 4P + 5 | ns |
| 12 | $t_{osu(SELV-XWEL)}$ | Output setup time, select signals valid to $\overline{XWE}$ low | WS * P – 2 | | | WS * P – 3 | | | ns |
| 13 | $t_{oh(XWEH-SELIV)}$ | Output hold time, $\overline{XWE}$ low to select signals invalid | WH * P – 2 | | | WH * P – 2 | | | ns |
| 14 | $t_{w(XWEL)}$ | Pulse width, $\overline{XWE}$ low | | WST * P | | | WST * P | | ns |
| 17 | $t_{d(XRDYH-XWEH)}$ | Delay time, XRDY high to $\overline{XWE}$ high | 3P | | 4P + 5 | 3P | | 4P + 5 | ns |

† RS = Read Setup, RST = Read Strobe, RH = Read Hold, WS = Write Setup, WST = Write Strobe, WH = Write Hold. These parameters are programmed via the XBUS XCE space control registers.
‡ P = 1/CPU clock frequency in ns. For example, when running parts at 250 MHz, use P = 4 ns.
§ The sum of RS and RST (or WS and WST) must be a minimum of 4 in order to use XRDY input to extend strobe width.
¶ Select signals include: $\overline{XCE}$x, $\overline{XBE[3:0]}$/XA[5:2], $\overline{XOE}$; and for writes, include XD[31:0], with the exception that $\overline{XCE}$x can stay active for an additional 7P ns following the end of the cycle.

## EXPANSION BUS ASYNCHRONOUS PERIPHERAL TIMING (CONTINUED)

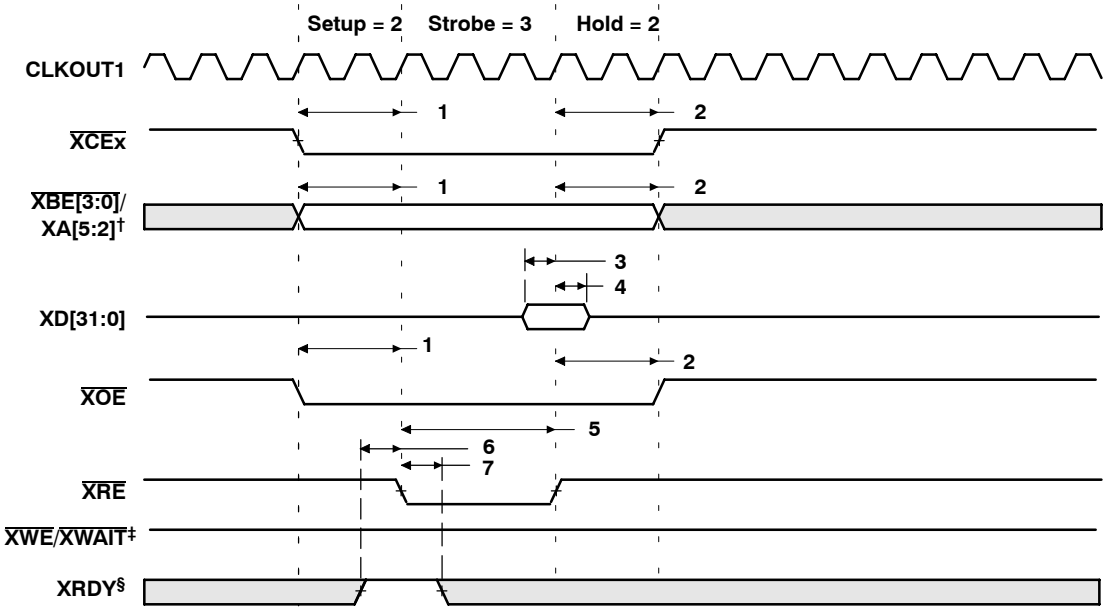


† $\overline{\text{XBE[3:0]}}$/XA[5:2] operate as address signals XA[5:2] during expansion bus asynchronous peripheral accesses.
‡ $\overline{\text{XWE}}$/$\overline{\text{XWAIT}}$ operates as the write-enable signal $\overline{\text{XWE}}$ during expansion bus asynchronous peripheral accesses.
§ XRDY operates as active-high ready input during expansion bus asynchronous peripheral accesses.

**Figure 37. Expansion Bus Asynchronous Peripheral Read Timing (XRDY Not Used)**

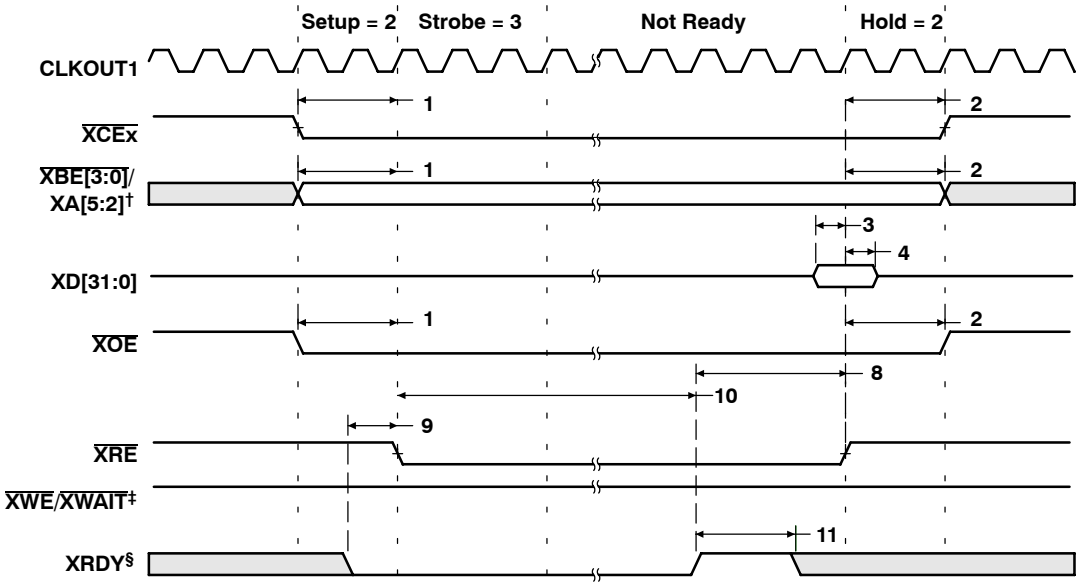


† $\overline{\text{XBE[3:0]}}$/XA[5:2] operate as address signals XA[5:2] during expansion bus asynchronous peripheral accesses.
‡ $\overline{\text{XWE}}$/$\overline{\text{XWAIT}}$ operates as the write-enable signal $\overline{\text{XWE}}$ during expansion bus asynchronous peripheral accesses.
§ XRDY operates as active-high ready input during expansion bus asynchronous peripheral accesses.

**Figure 38. Expansion Bus Asynchronous Peripheral Read Timing (XRDY Used)**

## EXPANSION BUS ASYNCHRONOUS PERIPHERAL TIMING (CONTINUED)

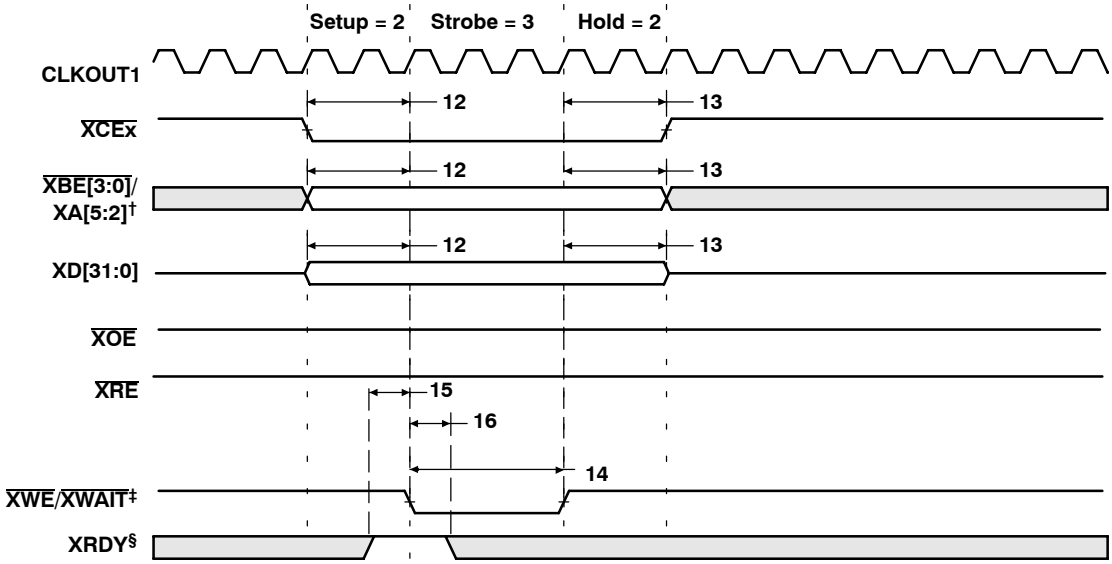


† $\overline{\text{XBE[3:0]}}$/XA[5:2] operate as address signals XA[5:2] during expansion bus asynchronous peripheral accesses.
‡ $\overline{\text{XWE}}$/$\overline{\text{XWAIT}}$ operates as the write-enable signal $\overline{\text{XWE}}$ during expansion bus asynchronous peripheral accesses.
§ XRDY operates as active-high ready input during expansion bus asynchronous peripheral accesses.

**Figure 39. Expansion Bus Asynchronous Peripheral Write Timing (XRDY Not Used)**

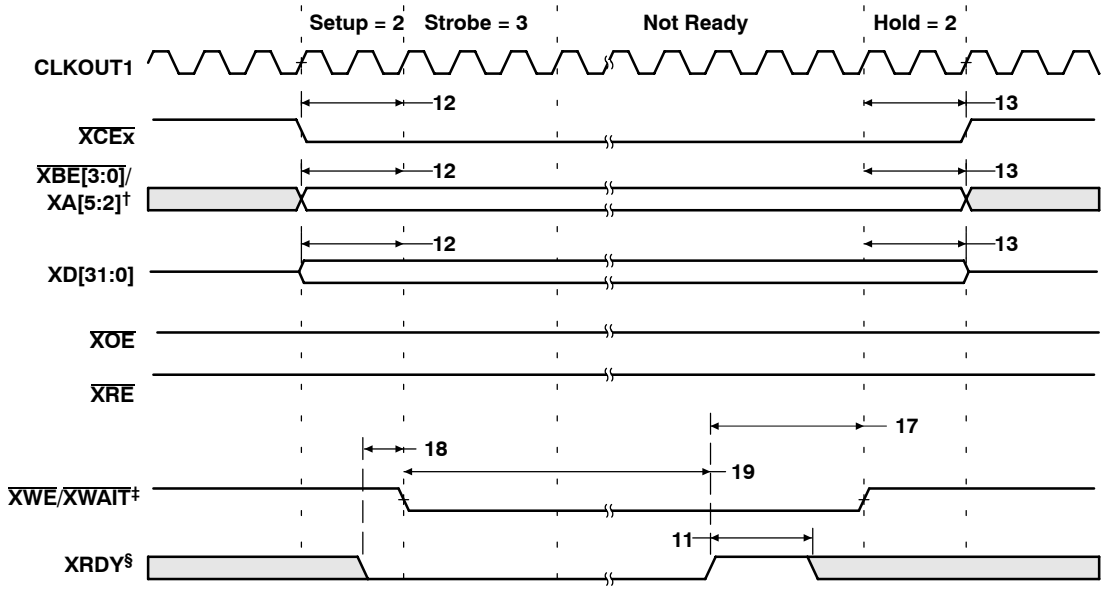


† $\overline{\text{XBE[3:0]}}$/XA[5:2] operate as address signals XA[5:2] during expansion bus asynchronous peripheral accesses.
‡ $\overline{\text{XWE}}$/$\overline{\text{XWAIT}}$ operates as the write-enable signal $\overline{\text{XWE}}$ during expansion bus asynchronous peripheral accesses.
§ XRDY operates as active-high ready input during expansion bus asynchronous peripheral accesses.

**Figure 40. Expansion Bus Asynchronous Peripheral Write Timing (XRDY Used)**

## EXPANSION BUS SYNCHRONOUS HOST-PORT TIMING

### timing requirements with external device as bus master (see Figure 41 and Figure 42)

| NO. | | | C6202-200 C6202-250 | | C6202B-250 C6202B-300 | | UNIT |
|---|---|---|---|---|---|---|---|
| | | | MIN | MAX | MIN | MAX | |
| 1 | $t_{su(XCSV-XCKIH)}$ | Setup time, $\overline{XCS}$ valid before XCLKIN high | 3.5 | | 3.5 | | ns |
| 2 | $t_{h(XCKIH-XCS)}$ | Hold time, $\overline{XCS}$ valid after XCLKIN high | 2.8 | | 2.8 | | ns |
| 3 | $t_{su(XAS-XCKIH)}$ | Setup time, $\overline{XAS}$ valid before XCLKIN high | 3.5 | | 3.5 | | ns |
| 4 | $t_{h(XCKIH-XAS)}$ | Hold time, $\overline{XAS}$ valid after XCLKIN high | 2.8 | | 2.8 | | ns |
| 5 | $t_{su(XCTL-XCKIH)}$ | Setup time, XCNTL valid before XCLKIN high | 3.5 | | 3.5 | | ns |
| 6 | $t_{h(XCKIH-XCTL)}$ | Hold time, XCNTL valid after XCLKIN high | 2.8 | | 2.8 | | ns |
| 7 | $t_{su(XWR-XCKIH)}$ | Setup time, XW/R valid before XCLKIN high† | 3.5 | | 3.5 | | ns |
| 8 | $t_{h(XCKIH-XWR)}$ | Hold time, XW/R valid after XCLKIN high† | 2.8 | | 2.8 | | ns |
| 9 | $t_{su(XBLTV-XCKIH)}$ | Setup time, XBLAST valid before XCLKIN high‡ | 3.5 | | 3.5 | | ns |
| 10 | $t_{h(XCKIH-XBLTV)}$ | Hold time, XBLAST valid after XCLKIN high‡ | 2.8 | | 2.8 | | ns |
| 16 | $t_{su(XBEV-XCKIH)}$ | Setup time, $\overline{XBE[3:0]}$/XA[5:2] valid before XCLKIN high§ | 3.5 | | 3.5 | | ns |
| 17 | $t_{h(XCKIH-XBEV)}$ | Hold time, $\overline{XBE[3:0]}$/XA[5:2] valid after XCLKIN high§ | 2.8 | | 2.8 | | ns |
| 18 | $t_{su(XD-XCKIH)}$ | Setup time, XDx valid before XCLKIN high | 3.5 | | 3.5 | | ns |
| 19 | $t_{h(XCKIH-XD)}$ | Hold time, XDx valid after XCLKIN high | 2.8 | | 2.8 | | ns |

† XW/R input/output polarity selected at boot.
‡ XBLAST input polarity selected at boot
§ $\overline{XBE[3:0]}$/XA[5:2] operate as byte-enables $\overline{XBE[3:0]}$ during host-port accesses.

### switching characteristics over recommended operating conditions with external device as bus master¶ (see Figure 41 and Figure 42)

| NO. | PARAMETER | | C6202-200 C6202-250 | | C6202B-250 C6202B-300 | | UNIT |
|---|---|---|---|---|---|---|---|
| | | | MIN | MAX | MIN | MAX | |
| 11 | $t_{d(XCKIH-XDLZ)}$ | Delay time, XCLKIN high to XDx low impedance | 0 | | 0 | | ns |
| 12 | $t_{d(XCKIH-XDV)}$ | Delay time, XCLKIN high to XDx valid | | 16.5 | | 4P – 0.5 | ns |
| 13 | $t_{d(XCKIH-XDIV)}$ | Delay time, XCLKIN high to XDx invalid | 5 | | 3 | | ns |
| 14 | $t_{d(XCKIH-XDHZ)}$ | Delay time, XCLKIN high to XDx high impedance | | 4P | | 4P | ns |
| 15 | $t_{d(XCKIH-XRY)}$ | Delay time, XCLKIN high to XRDY invalid# | 5 | 16.5 | 3 | 4P – 0.5 | ns |
| 20 | $t_{d(XCKIH-XRYLZ)}$ | Delay time, XCLKIN high to XRDY low impedance | 5 | 16.5 | 3 | 4P – 0.5 | ns |
| 21 | $t_{d(XCKIH-XRYHZ)}$ | Delay time, XCLKIN high to XRDY high impedance# | 2P + 5 | 3P + 16.5 | 2P + 3 | 7P + 0.5 | ns |

¶ P = 1/CPU clock frequency in ns. For example, when running parts at 250 MHz, use P = 4 ns.
# XRDY operates as active-low ready input/output during host-port accesses.

## EXPANSION BUS SYNCHRONOUS HOST-PORT TIMING (CONTINUED)

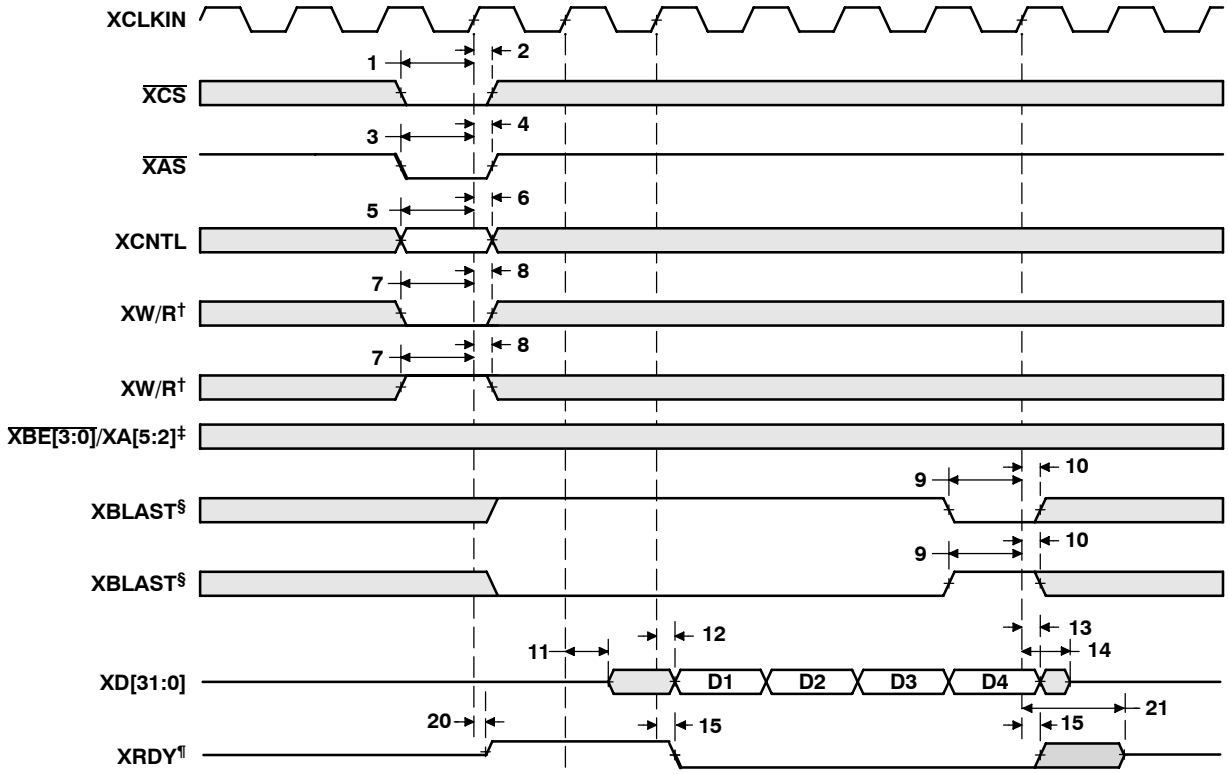


† XW/R input/output polarity selected at boot
‡ $\overline{\text{XBE[3:0]}}$/XA[5:2] operate as byte-enables $\overline{\text{XBE[3:0]}}$ during host-port accesses.
§ XBLAST input polarity selected at boot
¶ XRDY operates as active-low ready input/output during host-port accesses.

**Figure 41. External Host as Bus Master—Read**

## EXPANSION BUS SYNCHRONOUS HOST-PORT TIMING (CONTINUED)

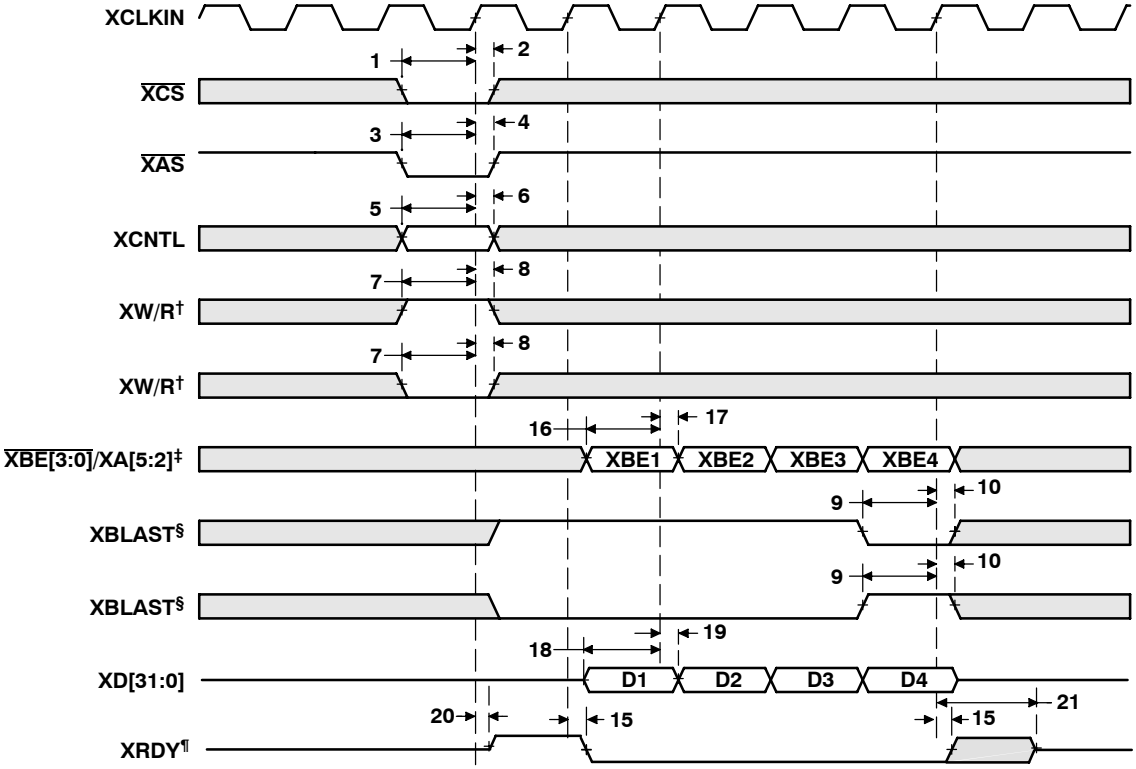


† XW/R input/output polarity selected at boot
‡ $\overline{\text{XBE[3:0]}}$/XA[5:2] operate as byte-enables $\overline{\text{XBE[3:0]}}$ during host-port accesses.
§ XBLAST input polarity selected at boot
¶ XRDY operates as active-low ready input/output during host-port accesses.

**Figure 42. External Host as Bus Master—Write**

## EXPANSION BUS SYNCHRONOUS HOST-PORT TIMING (CONTINUED)

### timing requirements with C62x™ as bus master (see Figure 43, Figure 44, and Figure 45)

| NO. | | | C6202-200 C6202-250 | | C6202B-250 C6202B-300 | | UNIT |
|---|---|---|---|---|---|---|---|
| | | | MIN | MAX | MIN | MAX | |
| 9 | $t_{su(XDV-XCKIH)}$ | Setup time, XDx valid before XCLKIN high | 3.5 | | 3.5 | | ns |
| 10 | $t_{h(XCKIH-XDV)}$ | Hold time, XDx valid after XCLKIN high | 2.8 | | 2.8 | | ns |
| 11 | $t_{su(XRY-XCKIH)}$ | Setup time, XRDY valid before XCLKIN high† | 3.5 | | 3.5 | | ns |
| 12 | $t_{h(XCKIH-XRY)}$ | Hold time, XRDY valid after XCLKIN high† | 2.8 | | 2.8 | | ns |
| 14 | $t_{su(XBFF-XCKIH)}$ | Setup time, XBOFF valid before XCLKIN high | 3.5 | | 3.5 | | ns |
| 15 | $t_{h(XCKIH-XBFF)}$ | Hold time, XBOFF valid after XCLKIN high | 2.8 | | 2.8 | | ns |

† XRDY operates as active-low ready input/output during host-port accesses.

### switching characteristics over recommended operating conditions with C62x as bus master (see Figure 43, Figure 44, and Figure 45)

| NO. | PARAMETER | | C6202-200 C6202-250 | | C6202B-250 C6202B-300 | | UNIT |
|---|---|---|---|---|---|---|---|
| | | | MIN | MAX | MIN | MAX | |
| 1 | $t_{d(XCKIH-XASV)}$ | Delay time, XCLKIN high to $\overline{XAS}$ valid | 5 | 16.5 | 3 | 4P – 0.5 | ns |
| 2 | $t_{d(XCKIH-XWRV)}$ | Delay time, XCLKIN high to XW/R valid‡ | 5 | 16.5 | 3 | 4P – 0.5 | ns |
| 3 | $t_{d(XCKIH-XBLTV)}$ | Delay time, XCLKIN high to XBLAST valid§ | 5 | 16.5 | 3 | 4P – 0.5 | ns |
| 4 | $t_{d(XCKIH-XBEV)}$ | Delay time, XCLKIN high to $\overline{XBE[3:0]}$/XA[5:2] valid¶ | 5 | 16.5 | 3 | 4P – 0.5 | ns |
| 5 | $t_{d(XCKIH-XDLZ)}$ | Delay time, XCLKIN high to XDx low impedance | 0 | | 0 | | ns |
| 6 | $t_{d(XCKIH-XDV)}$ | Delay time, XCLKIN high to XDx valid | | 16.5 | | 4P – 0.5 | ns |
| 7 | $t_{d(XCKIH-XDIV)}$ | Delay time, XCLKIN high to XDx invalid | 5 | | 3 | | ns |
| 8 | $t_{d(XCKIH-XDHZ)}$ | Delay time, XCLKIN high to XDx high impedance | | 4P | | 4P | ns |
| 13 | $t_{d(XCKIH-XWTV)}$ | Delay time, XCLKIN high to $\overline{XWE}$/$\overline{XWAIT}$ valid# | 5 | 16.5 | 3 | 4P – 0.5 | ns |

‡ XW/R input/output polarity selected at boot.
§ XBLAST output polarity is always active low.
¶ $\overline{XBE[3:0]}$/XA[5:2] operate as byte-enables $\overline{XBE[3:0]}$ during host-port accesses.
# $\overline{XWE}$/$\overline{XWAIT}$ operates as $\overline{XWAIT}$ output signal during host-port accesses.

## EXPANSION BUS SYNCHRONOUS HOST-PORT TIMING (CONTINUED)

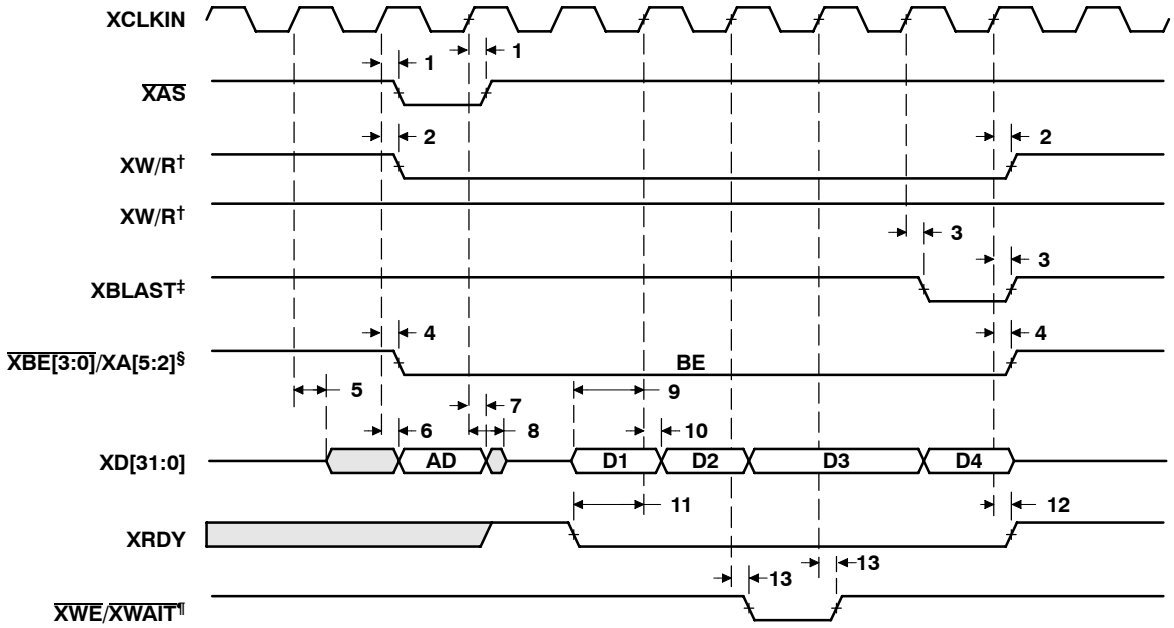


† XW/R input/output polarity selected at boot
‡ XBLAST output polarity is always active low.
§ XBE[3:0]/XA[5:2] operate as byte-enables XBE[3:0] during host-port accesses.
¶ XWE/XWAIT operates as XWAIT output signal during host-port accesses.

**Figure 43. C62x as Bus Master—Read**

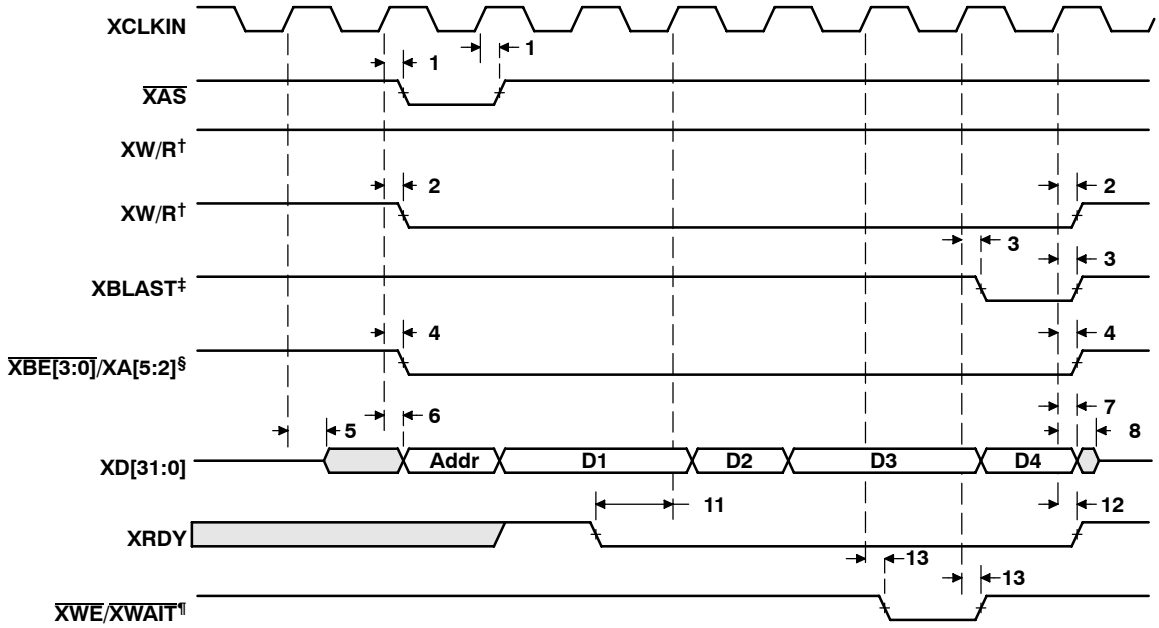


† XW/R input/output polarity selected at boot
‡ XBLAST output polarity is always active low.
§ XBE[3:0]/XA[5:2] operate as byte-enables XBE[3:0] during host-port accesses.
¶ XWE/XWAIT operates as XWAIT output signal during host-port accesses.

**Figure 44. C62x as Bus Master—Write**

## EXPANSION BUS SYNCHRONOUS HOST-PORT TIMING (CONTINUED)

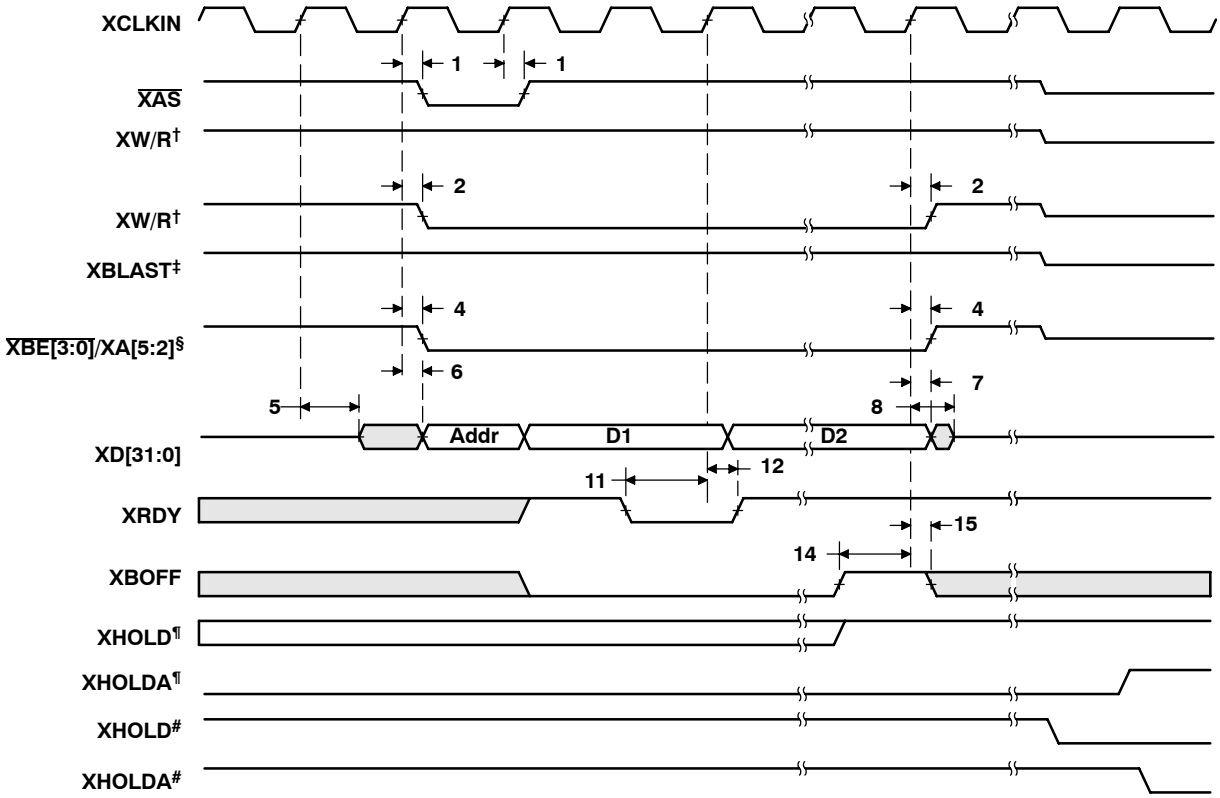


† XW/R input/output polarity selected at boot
‡ XBLAST output polarity is always active low.
§ $\overline{\text{XBE[3:0]}}$/XA[5:2] operate as byte-enables $\overline{\text{XBE[3:0]}}$ during host-port accesses.
¶ Internal arbiter enabled
# Internal arbiter disabled
‖ This diagram illustrates XBOFF timing. Bus arbitration timing is shown in Figure 48 and Figure 49.

**Figure 45. C62x as Bus Master—BOFF Operation‖**

## EXPANSION BUS ASYNCHRONOUS HOST-PORT TIMING

### timing requirements with external device as asynchronous bus master† (see Figure 46 and Figure 47)

| NO. | | | C6202-200 C6202-250 | | C6202B-250 C6202B-300 | | UNIT |
|---|---|---|---|---|---|---|---|
| | | | MIN | MAX | MIN | MAX | |
| 1 | $t_{w(XCSL)}$ | Pulse duration, $\overline{XCS}$ low | 4P | | 4P | | ns |
| 2 | $t_{w(XCSH)}$ | Pulse duration, $\overline{XCS}$ high | 4P | | 4P | | ns |
| 3 | $t_{su(XSEL-XCSL)}$ | Setup time, expansion bus select signals‡ valid before $\overline{XCS}$ low | 1 | | 1 | | ns |
| 4 | $t_{h(XCSL-XSEL)}$ | Hold time, expansion bus select signals‡ valid after $\overline{XCS}$ low | 3 | | 3.4 | | ns |
| 10 | $t_{h(XRYL-XCSL)}$ | Hold time, $\overline{XCS}$ low after XRDY low | P + 1.5 | | P + 1.5 | | ns |
| 11 | $t_{su(XBEV-XCSH)}$ | Setup time, $\overline{XBE[3:0]}$/XA[5:2] valid before $\overline{XCS}$ high§ | 1 | | 1 | | ns |
| 12 | $t_{h(XCSH-XBEV)}$ | Hold time, $\overline{XBE[3:0]}$/XA[5:2] valid after $\overline{XCS}$ high§ | 3 | | 3 | | ns |
| 13 | $t_{su(XDV-XCSH)}$ | Setup time, XDx valid before $\overline{XCS}$ high | 1 | | 1 | | ns |
| 14 | $t_{h(XCSH-XDV)}$ | Hold time, XDx valid after $\overline{XCS}$ high | 3 | | 3 | | ns |

† P = 1/CPU clock frequency in ns. For example, when running parts at 250 MHz, use P = 4 ns.
‡ Expansion bus select signals include XCNTL and XR/W.
§ $\overline{XBE[3:0]}$/XA[5:2] operate as byte-enables $\overline{XBE[3:0]}$ during host-port accesses.

### switching characteristics over recommended operating conditions with external device as asynchronous bus master† (see Figure 46 and Figure 47)

| NO. | PARAMETER | | C6202-200 C6202-250 | | C6202B-250 C6202B-300 | | UNIT |
|---|---|---|---|---|---|---|---|
| | | | MIN | MAX | MIN | MAX | |
| 5 | $t_{d(XCSL-XDLZ)}$ | Delay time, $\overline{XCS}$ low to XDx low impedance | 0 | | 0 | | ns |
| 6 | $t_{d(XCSH-XDIV)}$ | Delay time, $\overline{XCS}$ high to XDx invalid | 0 | 12 | 0 | 12 | ns |
| 7 | $t_{d(XCSH-XDHZ)}$ | Delay time, $\overline{XCS}$ high to XDx high impedance | | 4P | | 4P | ns |
| 8 | $t_{d(XRYL-XDV)}$ | Delay time, XRDY low to XDx valid | −4 | 1 | −4 | 1.8 | ns |
| 9 | $t_{d(XCSH-XRYH)}$ | Delay time, $\overline{XCS}$ high to XRDY high | 0 | 12 | −1 | 12 | ns |

† P = 1/CPU clock frequency in ns. For example, when running parts at 250 MHz, use P = 4 ns.

## EXPANSION BUS ASYNCHRONOUS HOST-PORT TIMING (CONTINUED)

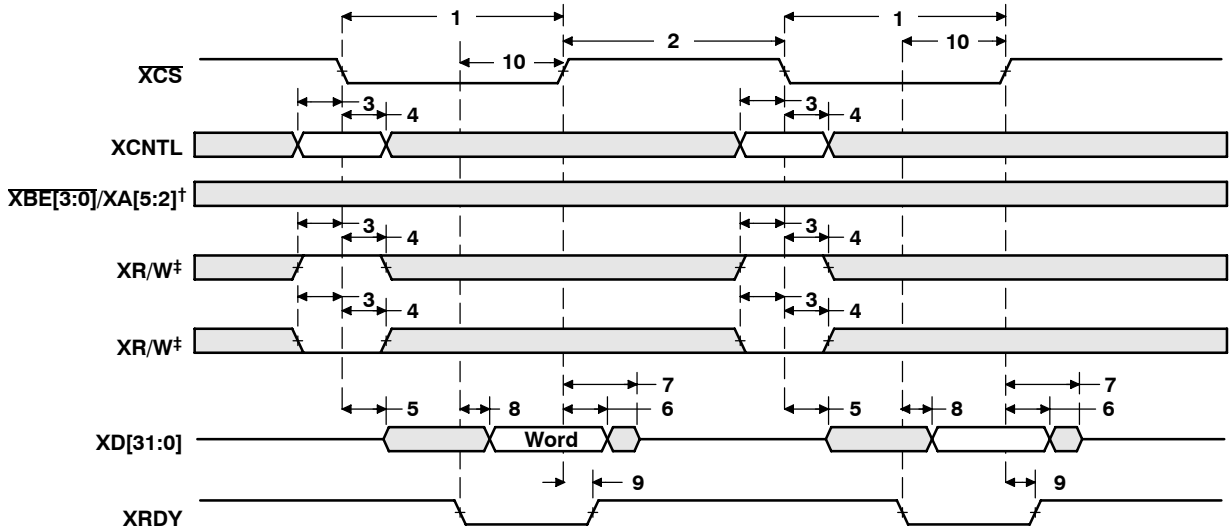


† $\overline{\text{XBE[3:0]}}$/XA[5:2] operate as byte-enables $\overline{\text{XBE[3:0]}}$ during host-port accesses.
‡ XW/R input/output polarity selected at boot

**Figure 46. External Device as Asynchronous Master—Read**

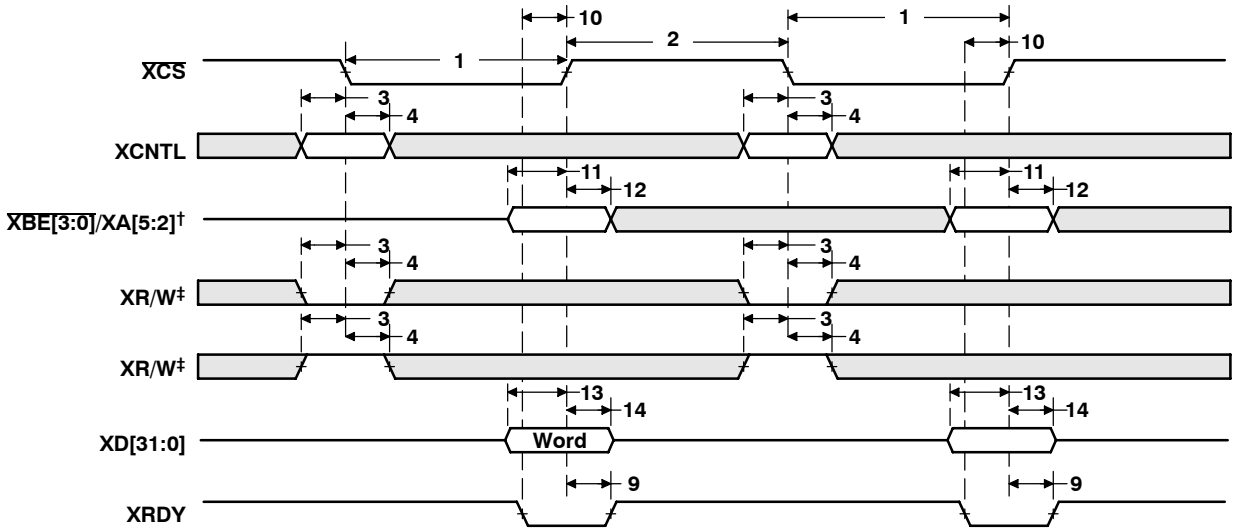


† $\overline{\text{XBE[3:0]}}$/XA[5:2] operate as byte-enables $\overline{\text{XBE[3:0]}}$ during host-port accesses.
‡ XW/R input/output polarity selected at boot

**Figure 47. External Device as Asynchronous Master—Write**

## XHOLD/XHOLDA TIMING

### timing requirements for expansion bus arbitration (internal arbiter enabled)† (see Figure 48)

| NO. | | | C6202-200 C6202-250 C6202B-250 C6202B-300 | | UNIT |
|---|---|---|---|---|---|
| | | | MIN | MAX | |
| 3 | $t_{oh(XHDAH-XHDH)}$ | Output hold time, XHOLD high after XHOLDA high | P | | ns |

† P = 1/CPU clock frequency in ns. For example, when running parts at 250 MHz, use P = 4 ns.

### switching characteristics over recommended operating conditions for expansion bus arbitration (internal arbiter enabled)†‡ (see Figure 48)

| NO. | PARAMETER | | C6202-200 C6202-250 C6202B-250 C6202B-300 | | UNIT |
|---|---|---|---|---|---|
| | | | MIN | MAX | |
| 1 | $t_{d(XHDH-XBHZ)}$ | Delay time, XHOLD high to XBus high impedance | 3P | § | ns |
| 2 | $t_{d(XBHZ-XHDAH)}$ | Delay time, XBus high impedance to XHOLDA high | 0 | 2P | ns |
| 4 | $t_{d(XHDL-XHDAL)}$ | Delay time, XHOLD low to XHOLDA low | 3P | | ns |
| 5 | $t_{d(XHDAL-XBLZ)}$ | Delay time, XHOLDA low to XBus low impedance | 0 | 2P | ns |

† P = 1/CPU clock frequency in ns. For example, when running parts at 250 MHz, use P = 4 ns.
‡ XBus consists of $\overline{XBE[3:0]}$/XA[5:2], $\overline{XAS}$, XW/R, and XBLAST.
§ All pending XBus transactions are allowed to complete before XHOLDA is asserted.

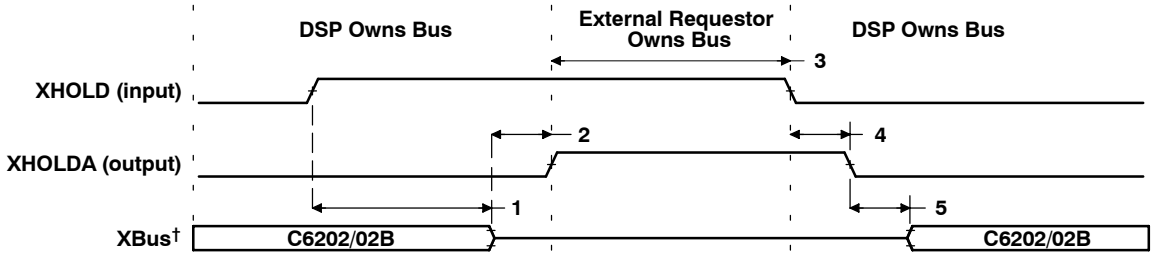


† XBus consists of $\overline{XBE[3:0]}$/XA[5:2], $\overline{XAS}$, XW/R, and XBLAST.

**Figure 48. Expansion Bus Arbitration—Internal Arbiter Enabled**

## XHOLD/XHOLDA TIMING (CONTINUED)

### switching characteristics over recommended operating conditions for expansion bus arbitration (internal arbiter disabled)† (see Figure 49)

| NO. | PARAMETER | | C6202-200 C6202-250 C6202B-250 C6202B-300 | | UNIT |
|---|---|---|---|---|---|
| | | | MIN | MAX | |
| 1 | $t_{d(XHDAH-XBLZ)}$ | Delay time, XHOLDA high to XBus low impedance‡ | 2P | 2P + 10 | ns |
| 2 | $t_{d(XBHZ-XHDL)}$ | Delay time, XBus high impedance to XHOLD low‡ | 0 | 2P | ns |

† P = 1/CPU clock frequency in ns. For example, when running parts at 250 MHz, use P = 4 ns.
‡ XBus consists of $\overline{XBE[3:0]}$/XA[5:2], $\overline{XAS}$, XW/R, and XBLAST.

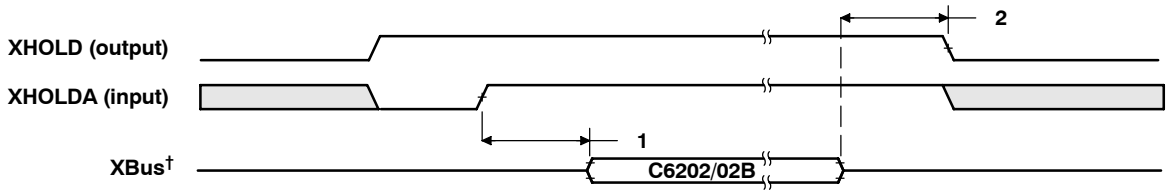


† XBus consists of $\overline{XBE[3:0]}$/XA[5:2], $\overline{XAS}$, XW/R, and XBLAST.

**Figure 49. Expansion Bus Arbitration—Internal Arbiter Disabled**

## MULTICHANNEL BUFFERED SERIAL PORT TIMING

### timing requirements for McBSP†‡ (see Figure 50)

| NO. | | | | C6202-200 C6202-250 | | C6202B-250 C6202B-300 | | UNIT |
|---|---|---|---|---|---|---|---|---|
| | | | | MIN | MAX | MIN | MAX | |
| 2 | $t_{c(CKRX)}$ | Cycle time, CLKR/X | CLKR/X ext | 2P§ | | 2P§ | | ns |
| 3 | $t_{w(CKRX)}$ | Pulse duration, CLKR/X high or CLKR/X low | CLKR/X ext | P–1¶ | | P–1¶ | | ns |
| 5 | $t_{su(FRH-CKRL)}$ | Setup time, external FSR high before CLKR low | CLKR int | 9 | | 9 | | ns |
| | | | CLKR ext | 2 | | 2 | | |
| 6 | $t_{h(CKRL-FRH)}$ | Hold time, external FSR high after CLKR low | CLKR int | 6 | | 6 | | ns |
| | | | CLKR ext | 3 | | 3 | | |
| 7 | $t_{su(DRV-CKRL)}$ | Setup time, DR valid before CLKR low | CLKR int | 8 | | 8 | | ns |
| | | | CLKR ext | 0.5 | | 0.5 | | |
| 8 | $t_{h(CKRL-DRV)}$ | Hold time, DR valid after CLKR low | CLKR int | 3 | | 3 | | ns |
| | | | CLKR ext | 4 | | 4.5 | | |
| 10 | $t_{su(FXH-CKXL)}$ | Setup time, external FSX high before CLKX low | CLKX int | 9 | | 9 | | ns |
| | | | CLKX ext | 2 | | 2 | | |
| 11 | $t_{h(CKXL-FXH)}$ | Hold time, external FSX high after CLKX low | CLKX int | 6 | | 6 | | ns |
| | | | CLKX ext | 3 | | 4 | | |

† CLKRP = CLKXP = FSRP = FSXP = 0. If the polarity of any of the signals is inverted, then the timing references of that signal are also inverted.

‡ P = 1/CPU clock frequency in ns. For example, when running parts at 250 MHz, use P = 4 ns.

§ The maximum bit rate for the C6202/02B device is 100 Mbps or CPU/2 (the slower of the two). Care must be taken to ensure that the AC timings specified in this data sheet are met. The maximum bit rate for McBSP-to-McBSP communications is 100 MHz; therefore, the minimum CLKR/X clock cycle is either twice the CPU cycle time (2P), or 10 ns (100 MHz), whichever value is larger. For example, when running parts at 250 MHz (P = 4 ns), use 10 ns as the minimum CLKR/X clock cycle (by setting the appropriate CLKGDV ratio or external clock source). When running parts at 100 MHz (P = 10 ns), use 2P = 20 ns (50 MHz) as the minimum CLKR/X clock cycle. The maximum bit rate for McBSP-to-McBSP communications applies when the serial port is a master of the clock and frame syncs (with CLKR connected to CLKX, FSR connected to FSX, CLKXM = FSXM = 1, and CLKRM = FSRM = 0) in data delay 1 or 2 mode (R/XDATDLY = 01b or 10b) and the other device the McBSP communicates to is a slave.

¶ The minimum CLKR/X pulse duration is either (P–1) or 4 ns, whichever is larger. For example, when running parts at 250 MHz (P = 4 ns), use 4 ns as the minimum CLKR/X pulse duration. When running parts at 100 MHz (P = 10 ns), use (P–1) = 9 ns as the minimum CLKR/X pulse duration.

## MULTICHANNEL BUFFERED SERIAL PORT TIMING (CONTINUED)

### switching characteristics over recommended operating conditions for McBSP†‡ (see Figure 50)

| NO. | PARAMETER | | | C6202-200 C6202-250 | | C6202B-250 C6202B-300 | | UNIT |
|---|---|---|---|---|---|---|---|---|
| | | | | MIN | MAX | MIN | MAX | |
| 1 | $t_{d(CKSH-CKRXH)}$ | Delay time, CLKS high to CLKR/X high for internal CLKR/X generated from CLKS input | | 4 | 16 | 4 | 16 | ns |
| 2 | $t_{c(CKRX)}$ | Cycle time, CLKR/X | CLKR/X int | 2P§¶ | | 2P§¶ | | ns |
| 3 | $t_{w(CKRX)}$ | Pulse duration, CLKR/X high or CLKR/X low | CLKR/X int | C – 1# | C + 1# | C – 1# | C + 1# | ns |
| 4 | $t_{d(CKRH-FRV)}$ | Delay time, CLKR high to internal FSR valid | CLKR int | –2 | 3 | –2 | 3 | ns |
| 9 | $t_{d(CKXH-FXV)}$ | Delay time, CLKX high to internal FSX valid | CLKX int | –2 | 3 | –2 | 3 | ns |
| | | | CLKX ext | 3 | 9 | 2 | 9 | |
| 12 | $t_{dis(CKXH-DXHZ)}$ | Disable time, DX high impedance following last data bit from CLKX high | CLKX int | –1 | 5 | –1 | 5 | ns |
| | | | CLKX ext | 2 | 9 | 2 | 9 | |
| 13 | $t_{d(CKXH-DXV)}$ | Delay time, CLKX high to DX valid | CLKX int | –1 | 4 | –0.5 | 3 | ns |
| | | | CLKX ext | 2 | 11 | 2 | 11 | |
| 14 | $t_{d(FXH-DXV)}$ | Delay time, FSX high to DX valid ONLY applies when in data delay 0 (XDATDLY = 00b) mode. | FSX int | –1 | 5 | –1 | 5 | ns |
| | | | FSX ext | 0 | 10 | 0 | 10 | |

† CLKRP = CLKXP = FSRP = FSXP = 0. If the polarity of any of the signals is inverted, then the timing references of that signal are also inverted.
‡ Minimum delay times also represent minimum output hold times.
§ P = 1/CPU clock frequency in ns. For example, when running parts at 250 MHz, use P = 4 ns.
¶ The maximum bit rate for the C6202/02B device is 100 Mbps or CPU/2 (the slower of the two). Care must be taken to ensure that the AC timings specified in this data sheet are met. The maximum bit rate for McBSP-to-McBSP communications is 100 MHz; therefore, the minimum CLKR/X clock cycle is either twice the CPU cycle time (2P), or 10 ns (100 MHz), whichever value is larger. For example, when running parts at 250 MHz (P = 4 ns), use 10 ns as the minimum CLKR/X clock cycle (by setting the appropriate CLKGDV ratio or external clock source). When running parts at 100 MHz (P = 10 ns), use 2P = 20 ns (50 MHz) as the minimum CLKR/X clock cycle. The maximum bit rate for McBSP-to-McBSP communications applies when the serial port is a master of the clock and frame syncs (with CLKR connected to CLKX, FSR connected to FSX, CLKXM = FSXM = 1, and CLKRM = FSRM = 0) in data delay 1 or 2 mode (R/XDATDLY = 01b or 10b) and the other device the McBSP communicates to is a slave.
# C = H or L
S = sample rate generator input clock = P if CLKSM = 1 (P = 1/CPU clock frequency)
= sample rate generator input clock = P_clks if CLKSM = 0 (P_clks = CLKS period)
H = CLKX high pulse width = (CLKGDV/2 + 1) * S if CLKGDV is even
= (CLKGDV + 1)/2 * S if CLKGDV is odd or zero
L = CLKX low pulse width = (CLKGDV/2) * S if CLKGDV is even
= (CLKGDV + 1)/2 * S if CLKGDV is odd or zero
CLKGDV should be set appropriately to ensure the McBSP bit rate does not exceed the 100-MHz limit.

## MULTICHANNEL BUFFERED SERIAL PORT TIMING (CONTINUED)

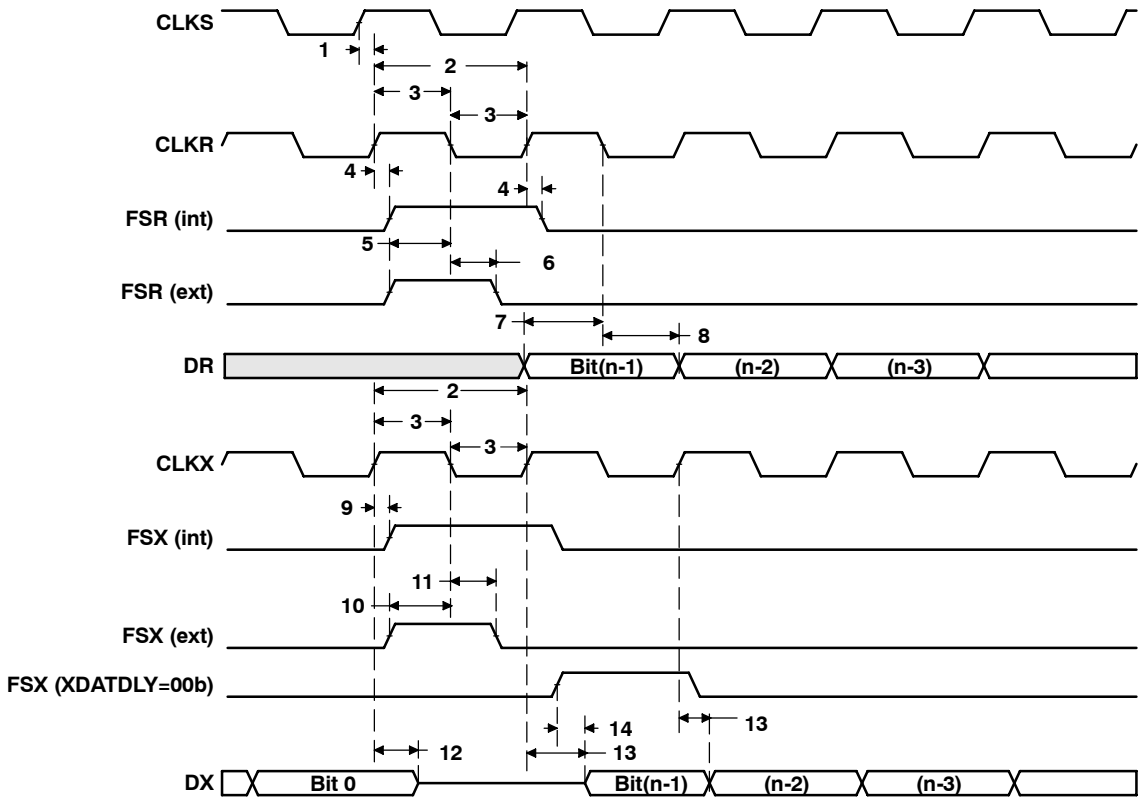


**Figure 50. McBSP Timings**

## MULTICHANNEL BUFFERED SERIAL PORT TIMING (CONTINUED)

### timing requirements for FSR when GSYNC = 1 (see Figure 51)

| NO. | | | C6202-200<br>C6202-250<br>C6202B-250<br>C6202B-300 | | UNIT |
|---|---|---|---|---|---|
| | | | MIN | MAX | |
| 1 | $t_{su(FRH-CKSH)}$ | Setup time, FSR high before CLKS high | 4 | | ns |
| 2 | $t_{h(CKSH-FRH)}$ | Hold time, FSR high after CLKS high | 4 | | ns |

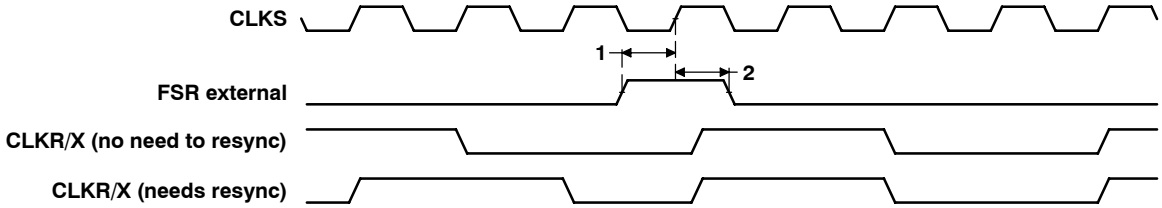


**Figure 51. FSR Timing When GSYNC = 1**

## MULTICHANNEL BUFFERED SERIAL PORT TIMING (CONTINUED)

### timing requirements for McBSP as SPI master or slave: CLKSTP = 10b, CLKXP = 0†‡ (see Figure 52)

| NO. | | | C6202-200 C6202-250 C6202B-250 C6202B-300 | | | | UNIT |
|---|---|---|---|---|---|---|---|
| | | | MASTER | | SLAVE | | |
| | | | MIN | MAX | MIN | MAX | |
| 4 | $t_{su(DRV-CKXL)}$ | Setup time, DR valid before CLKX low | 12 | | 2 – 3P | | ns |
| 5 | $t_{h(CKXL-DRV)}$ | Hold time, DR valid after CLKX low | 4 | | 5 + 6P | | ns |

† P = 1/CPU clock frequency in ns. For example, when running parts at 250 MHz, use P = 4 ns.
‡ For all SPI slave modes, CLKG is programmed as 1/2 of the CPU clock by setting CLKSM = CLKGDV = 1.

### switching characteristics over recommended operating conditions for McBSP as SPI master or slave: CLKSTP = 10b, CLKXP = 0†‡ (see Figure 52)

| NO. | PARAMETER | | C6202-200 C6202-250 C6202B-250 C6202B-300 | | | | UNIT |
|---|---|---|---|---|---|---|---|
| | | | MASTER§ | | SLAVE | | |
| | | | MIN | MAX | MIN | MAX | |
| 1 | $t_{h(CKXL-FXL)}$ | Hold time, FSX low after CLKX low¶ | T – 2 | T + 3 | | | ns |
| 2 | $t_{d(FXL-CKXH)}$ | Delay time, FSX low to CLKX high# | L – 2 | L + 3 | | | ns |
| 3 | $t_{d(CKXH-DXV)}$ | Delay time, CLKX high to DX valid | –3 | 4 | 3P + 4 | 5P + 17 | ns |
| 6 | $t_{dis(CKXL-DXHZ)}$ | Disable time, DX high impedance following last data bit from CLKX low | L – 2 | L + 3 | | | ns |
| 7 | $t_{dis(FXH-DXHZ)}$ | Disable time, DX high impedance following last data bit from FSX high | | | P + 3 | 3P + 17 | ns |
| 8 | $t_{d(FXL-DXV)}$ | Delay time, FSX low to DX valid | | | 2P + 2 | 4P + 17 | ns |

† P = 1/CPU clock frequency in ns. For example, when running parts at 250 MHz, use P = 4 ns.
‡ For all SPI slave modes, CLKG is programmed as 1/2 of the CPU clock by setting CLKSM = CLKGDV = 1.
§ S = sample rate generator input clock = P if CLKSM = 1 (P = 1/CPU clock frequency)
= sample rate generator input clock = P_clks if CLKSM = 0 (P_clks = CLKS period)
T = CLKX period = (1 + CLKGDV) * S
H = CLKX high pulse width = (CLKGDV/2 + 1) * S if CLKGDV is even
= (CLKGDV + 1)/2 * S if CLKGDV is odd or zero
L = CLKX low pulse width = (CLKGDV/2) * S if CLKGDV is even
= (CLKGDV + 1)/2 * S if CLKGDV is odd or zero
CLKGDV should be set appropriately to ensure the McBSP bit rate does not exceed the 100-MHz limit.
¶ FSRP = FSXP = 1. As a SPI master, FSX is inverted to provide active-low slave-enable output. As a slave, the active-low signal input on FSX and FSR is inverted before being used internally.
CLKXM = FSXM = 1, CLKRM = FSRM = 0 for master McBSP
CLKXM = CLKRM = FSXM = FSRM = 0 for slave McBSP
# FSX should be low before the rising edge of clock to enable slave devices and then begin a SPI transfer at the rising edge of the master clock (CLKX).

## MULTICHANNEL BUFFERED SERIAL PORT TIMING (CONTINUED)

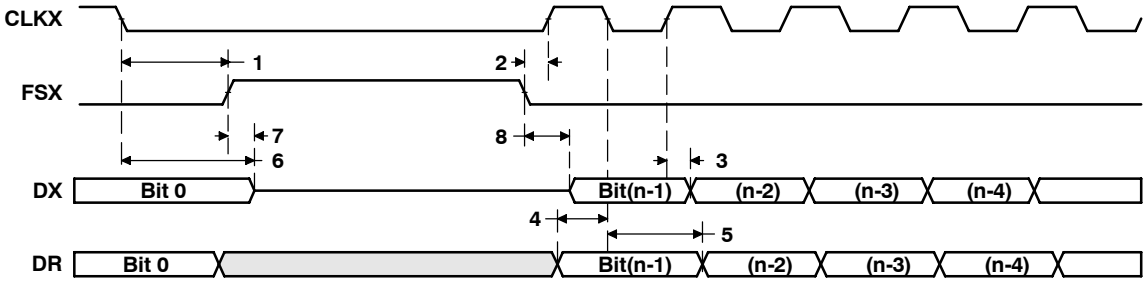


**Figure 52. McBSP Timing as SPI Master or Slave: CLKSTP = 10b, CLKXP = 0**

## MULTICHANNEL BUFFERED SERIAL PORT TIMING (CONTINUED)

### timing requirements for McBSP as SPI master or slave: CLKSTP = 11b, CLKXP = 0†‡ (see Figure 53)

| NO. | | | C6202-200 C6202-250 C6202B-250 C6202B-300 | | | | UNIT |
|---|---|---|---|---|---|---|---|
| | | | MASTER | | SLAVE | | |
| | | | MIN | MAX | MIN | MAX | |
| 4 | $t_{su(DRV-CKXH)}$ | Setup time, DR valid before CLKX high | 12 | | 2 – 3P | | ns |
| 5 | $t_{h(CKXH-DRV)}$ | Hold time, DR valid after CLKX high | 4 | | 5 + 6P | | ns |

† P = 1/CPU clock frequency in ns. For example, when running parts at 250 MHz, use P = 4 ns.
‡ For all SPI slave modes, CLKG is programmed as 1/2 of the CPU clock by setting CLKSM = CLKGDV = 1.

### switching characteristics over recommended operating conditions for McBSP as SPI master or slave: CLKSTP = 11b, CLKXP = 0†‡ (see Figure 53)

| NO. | PARAMETER | | C6202-200 C6202-250 C6202B-250 C6202B-300 | | | | UNIT |
|---|---|---|---|---|---|---|---|
| | | | MASTER§ | | SLAVE | | |
| | | | MIN | MAX | MIN | MAX | |
| 1 | $t_{h(CKXL-FXL)}$ | Hold time, FSX low after CLKX low¶ | L – 2 | L + 3 | | | ns |
| 2 | $t_{d(FXL-CKXH)}$ | Delay time, FSX low to CLKX high# | T – 2 | T + 3 | | | ns |
| 3 | $t_{d(CKXL-DXV)}$ | Delay time, CLKX low to DX valid | –2 | 4 | 3P + 4 | 5P + 17 | ns |
| 6 | $t_{dis(CKXL-DXHZ)}$ | Disable time, DX high impedance following last data bit from CLKX low | –2 | 4 | 3P + 3 | 5P + 17 | ns |
| 7 | $t_{d(FXL-DXV)}$ | Delay time, FSX low to DX valid | H – 2 | H + 4 | 2P + 2 | 4P + 17 | ns |

† P = 1/CPU clock frequency in ns. For example, when running parts at 250 MHz, use P = 4 ns.
‡ For all SPI slave modes, CLKG is programmed as 1/2 of the CPU clock by setting CLKSM = CLKGDV = 1.
§ S = sample rate generator input clock = P if CLKSM = 1 (P = 1/CPU clock frequency)
= sample rate generator input clock = P_clks if CLKSM = 0 (P_clks = CLKS period)
T = CLKX period = (1 + CLKGDV) * S
H = CLKX high pulse width = (CLKGDV/2 + 1) * S if CLKGDV is even
= (CLKGDV + 1)/2 * S if CLKGDV is odd or zero
L = CLKX low pulse width = (CLKGDV/2) * S if CLKGDV is even
= (CLKGDV + 1)/2 * S if CLKGDV is odd or zero
The maximum transfer rate for SPI mode is limited to the above AC timing constraints.
¶ FSRP = FSXP = 1. As a SPI master, FSX is inverted to provide active-low slave-enable output. As a slave, the active-low signal input on FSX and FSR is inverted before being used internally.
CLKXM = FSXM = 1, CLKRM = FSRM = 0 for master McBSP
CLKXM = CLKRM = FSXM = FSRM = 0 for slave McBSP
# FSX should be low before the rising edge of clock to enable slave devices and then begin a SPI transfer at the rising edge of the master clock (CLKX).

## MULTICHANNEL BUFFERED SERIAL PORT TIMING (CONTINUED)

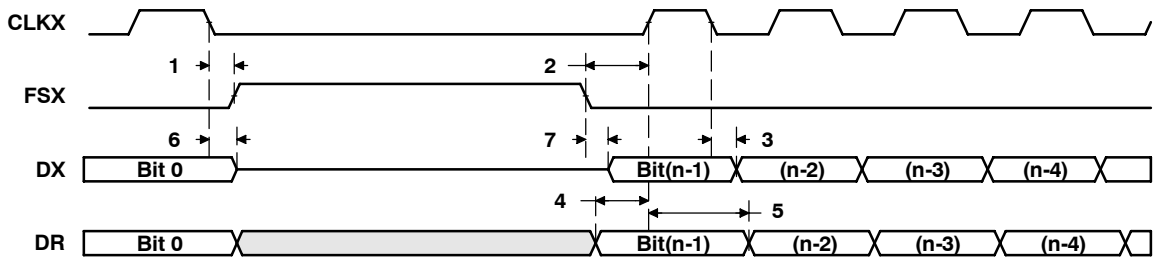


**Figure 53. McBSP Timing as SPI Master or Slave: CLKSTP = 11b, CLKXP = 0**

## MULTICHANNEL BUFFERED SERIAL PORT TIMING (CONTINUED)

### timing requirements for McBSP as SPI master or slave: CLKSTP = 10b, CLKXP = 1†‡ (see Figure 54)

| NO. | | | C6202-200 C6202-250 C6202B-250 C6202B-300 | | | | UNIT |
|---|---|---|---|---|---|---|---|
| | | | MASTER | | SLAVE | | |
| | | | MIN | MAX | MIN | MAX | |
| 4 | $t_{su(DRV-CKXH)}$ | Setup time, DR valid before CLKX high | 12 | | 2 – 3P | | ns |
| 5 | $t_{h(CKXH-DRV)}$ | Hold time, DR valid after CLKX high | 4 | | 5 + 6P | | ns |

† P = 1/CPU clock frequency in ns. For example, when running parts at 250 MHz, use P = 4 ns.
‡ For all SPI slave modes, CLKG is programmed as 1/2 of the CPU clock by setting CLKSM = CLKGDV = 1.

### switching characteristics over recommended operating conditions for McBSP as SPI master or slave: CLKSTP = 10b, CLKXP = 1†‡ (see Figure 54)

| NO. | PARAMETER | | C6202-200 C6202-250 | | | | C6202B-250 C6202B-300 | | | | UNIT |
|---|---|---|---|---|---|---|---|---|---|---|---|
| | | | MASTER§ | | SLAVE | | MASTER§ | | SLAVE | | |
| | | | MIN | MAX | MIN | MAX | MIN | MAX | MIN | MAX | |
| 1 | $t_{h(CKXH-FXL)}$ | Hold time, FSX low after CLKX high¶ | T – 2 | T + 3 | | | T – 2 | T + 3 | | | ns |
| 2 | $t_{d(FXL-CKXL)}$ | Delay time, FSX low to CLKX low# | H – 2 | H + 3 | | | H – 2 | H + 3 | | | ns |
| 3 | $t_{d(CKXL-DXV)}$ | Delay time, CLKX low to DX valid | –2 | 4 | 3P + 4 | 5P + 17 | –3 | 4 | 3P + 4 | 5P + 17 | ns |
| 6 | $t_{dis(CKXH-DXHZ)}$ | Disable time, DX high impedance following last data bit from CLKX high | H – 2 | H + 3 | | | H – 2 | H + 3 | | | ns |
| 7 | $t_{dis(FXH-DXHZ)}$ | Disable time, DX high impedance following last data bit from FSX high | | | P + 3 | 3P + 17 | | | P + 3 | 3P + 17 | ns |
| 8 | $t_{d(FXL-DXV)}$ | Delay time, FSX low to DX valid | | | 2P + 2 | 4P + 17 | | | 2P + 2 | 4P + 17 | ns |

† P = 1/CPU clock frequency in ns. For example, when running parts at 250 MHz, use P = 4 ns.
‡ For all SPI slave modes, CLKG is programmed as 1/2 of the CPU clock by setting CLKSM = CLKGDV = 1.
§ S = sample rate generator input clock = P if CLKSM = 1 (P = 1/CPU clock frequency)
= sample rate generator input clock = P_clks if CLKSM = 0 (P_clks = CLKS period)
T = CLKX period = (1 + CLKGDV) * S
H = CLKX high pulse width = (CLKGDV/2 + 1) * S if CLKGDV is even
= (CLKGDV + 1)/2 * S if CLKGDV is odd or zero
L = CLKX low pulse width = (CLKGDV/2) * S if CLKGDV is even
= (CLKGDV + 1)/2 * S if CLKGDV is odd or zero
The maximum transfer rate for SPI mode is limited to the above AC timing constraints.
¶ FSRP = FSXP = 1. As a SPI master, FSX is inverted to provide active-low slave-enable output. As a slave, the active-low signal input on FSX and FSR is inverted before being used internally.
CLKXM = FSXM = 1, CLKRM = FSRM = 0 for master McBSP
CLKXM = CLKRM = FSXM = FSRM = 0 for slave McBSP
# FSX should be low before the rising edge of clock to enable slave devices and then begin a SPI transfer at the rising edge of the master clock (CLKX).

## MULTICHANNEL BUFFERED SERIAL PORT TIMING (CONTINUED)

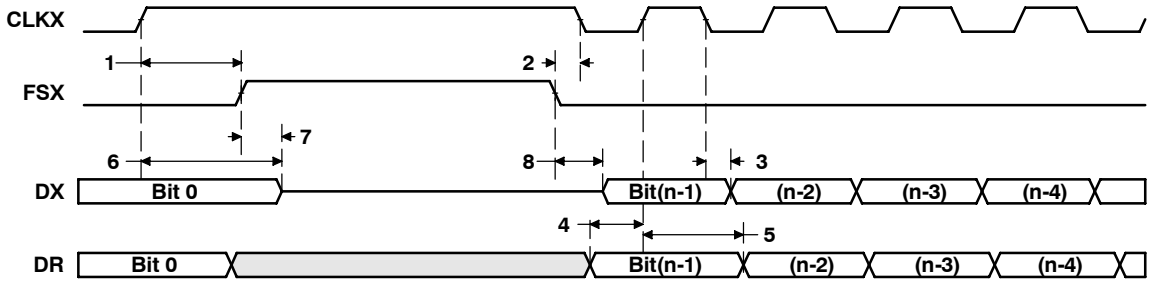


**Figure 54. McBSP Timing as SPI Master or Slave: CLKSTP = 10b, CLKXP = 1**

## MULTICHANNEL BUFFERED SERIAL PORT TIMING (CONTINUED)

### timing requirements for McBSP as SPI master or slave: CLKSTP = 11b, CLKXP = 1†‡ (see Figure 55)

| NO. | | | C6202-200 C6202-250 C6202B-250 C6202B-300 | | | | UNIT |
|---|---|---|---|---|---|---|---|
| | | | MASTER | | SLAVE | | |
| | | | MIN | MAX | MIN | MAX | |
| 4 | $t_{su(DRV-CKXL)}$ | Setup time, DR valid before CLKX low | 12 | | 2 – 3P | | ns |
| 5 | $t_{h(CKXL-DRV)}$ | Hold time, DR valid after CLKX low | 4 | | 5 + 6P | | ns |

† P = 1/CPU clock frequency in ns. For example, when running parts at 250 MHz, use P = 4 ns.
‡ For all SPI slave modes, CLKG is programmed as 1/2 of the CPU clock by setting CLKSM = CLKGDV = 1.

### switching characteristics over recommended operating conditions for McBSP as SPI master or slave: CLKSTP = 11b, CLKXP = 1†‡ (see Figure 55)

| NO. | PARAMETER | | C6202-200 C6202-250 C6202B-250 C6202B-300 | | | | UNIT |
|---|---|---|---|---|---|---|---|
| | | | MASTER§ | | SLAVE | | |
| | | | MIN | MAX | MIN | MAX | |
| 1 | $t_{h(CKXH-FXL)}$ | Hold time, FSX low after CLKX high¶ | H – 2 | H + 3 | | | ns |
| 2 | $t_{d(FXL-CKXL)}$ | Delay time, FSX low to CLKX low# | T – 2 | T + 2 | | | ns |
| 3 | $t_{d(CKXH-DXV)}$ | Delay time, CLKX high to DX valid | –3 | 4 | 3P + 4 | 5P + 17 | ns |
| 6 | $t_{dis(CKXH-DXHZ)}$ | Disable time, DX high impedance following last data bit from CLKX high | –2 | 4 | 3P + 3 | 5P + 17 | ns |
| 7 | $t_{d(FXL-DXV)}$ | Delay time, FSX low to DX valid | L – 2 | L + 5 | 2P + 2 | 4P + 17 | ns |

† P = 1/CPU clock frequency in ns. For example, when running parts at 250 MHz, use P = 4 ns.
‡ For all SPI slave modes, CLKG is programmed as 1/2 of the CPU clock by setting CLKSM = CLKGDV = 1.
§ S = sample rate generator input clock = P if CLKSM = 1 (P = 1/CPU clock frequency)
= sample rate generator input clock = P_clks if CLKSM = 0 (P_clks = CLKS period)
T = CLKX period = (1 + CLKGDV) * S
H = CLKX high pulse width = (CLKGDV/2 + 1) * S if CLKGDV is even
= (CLKGDV + 1)/2 * S if CLKGDV is odd or zero
L = CLKX low pulse width = (CLKGDV/2) * S if CLKGDV is even
= (CLKGDV + 1)/2 * S if CLKGDV is odd or zero
CLKGDV should be set appropriately to ensure the McBSP bit rate does not exceed the 100-MHz limit.
¶ FSRP = FSXP = 1. As a SPI master, FSX is inverted to provide active-low slave-enable output. As a slave, the active-low signal input on FSX and FSR is inverted before being used internally.
CLKXM = FSXM = 1, CLKRM = FSRM = 0 for master McBSP
CLKXM = CLKRM = FSXM = FSRM = 0 for slave McBSP
# FSX should be low before the rising edge of clock to enable slave devices and then begin a SPI transfer at the rising edge of the master clock (CLKX).

## MULTICHANNEL BUFFERED SERIAL PORT TIMING (CONTINUED)

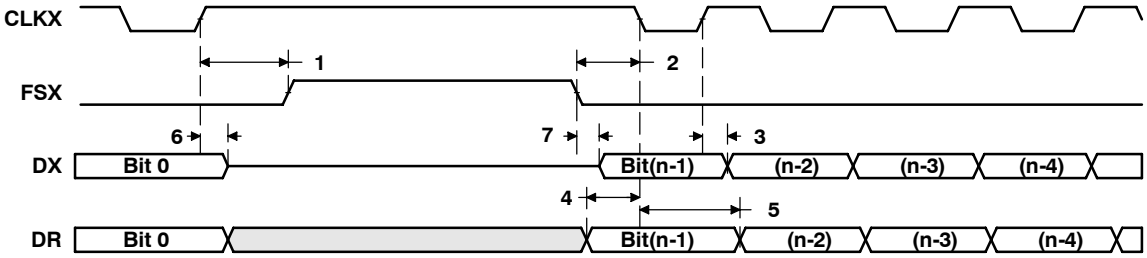


**Figure 55. McBSP Timing as SPI Master or Slave: CLKSTP = 11b, CLKXP = 1**

## DMAC, TIMER, POWER-DOWN TIMING

### switching characteristics over recommended operating conditions for DMAC outputs† (see Figure 56)

| NO. | PARAMETER | | C6202-200 C6202-250 C6202B-250 C6202B-300 MIN | MAX | UNIT |
|---|---|---|---|---|---|
| 1 | $t_{w(DMACH)}$ | Pulse duration, DMAC high | 2P–3 | | ns |

† P = 1/CPU clock frequency in ns. For example, when running parts at 250 MHz, use P = 4 ns.

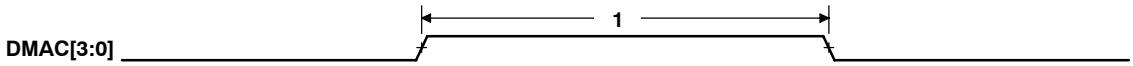


**Figure 56. DMAC Timing**

### timing requirements for timer inputs† (see Figure 57)

| NO. | | | C6202-200 C6202-250 C6202B-250 C6202B-300 MIN | MAX | UNIT |
|---|---|---|---|---|---|
| 1 | $t_{w(TINPH)}$ | Pulse duration, TINP high | 2P | | ns |
| 2 | $t_{w(TINPL)}$ | Pulse duration, TINP low | 2P | | ns |

† P = 1/CPU clock frequency in ns. For example, when running parts at 250 MHz, use P = 4 ns.

### switching characteristics over recommended operating conditions for timer outputs† (see Figure 57)

| NO. | PARAMETER | | C6202-200 C6202-250 C6202B-250 C6202B-300 MIN | MAX | UNIT |
|---|---|---|---|---|---|
| 3 | $t_{w(TOUTH)}$ | Pulse duration, TOUT high | 2P–3 | | ns |
| 4 | $t_{w(TOUTL)}$ | Pulse duration, TOUT low | 2P–3 | | ns |

† P = 1/CPU clock frequency in ns. For example, when running parts at 250 MHz, use P = 4 ns.

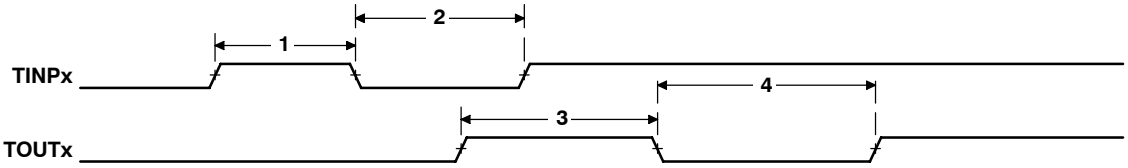


**Figure 57. Timer Timing**

## DMAC, TIMER, POWER-DOWN TIMING (CONTINUED)

### switching characteristics over recommended operating conditions for power-down outputs† (see Figure 58)

| NO. | PARAMETER | | C6202-200<br>C6202-250<br>C6202B-250<br>C6202B-300 | | UNIT |
|---|---|---|---|---|---|
| | | | MIN | MAX | |
| 1 | $t_{w(PDH)}$ | Pulse duration, PD high | 2P | | ns |

† P = 1/CPU clock frequency in ns. For example, when running parts at 250 MHz, use P = 4 ns.

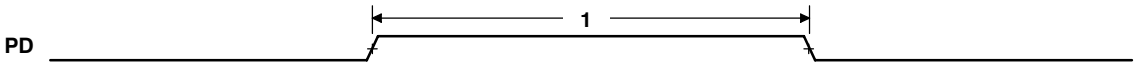


**Figure 58. Power-Down Timing**

## JTAG TEST-PORT TIMING

### timing requirements for JTAG test port (see Figure 59)

| NO. | | | C6202-200 C6202-250 C6202B-250 C6202B-300 | | UNIT |
|---|---|---|---|---|---|
| | | | MIN | MAX | |
| 1 | $t_{c(TCK)}$ | Cycle time, TCK | 35 | | ns |
| 3 | $t_{su(TDIV-TCKH)}$ | Setup time, TDI/TMS/$\overline{TRST}$ valid before TCK high | 11 | | ns |
| 4 | $t_{h(TCKH-TDIV)}$ | Hold time, TDI/TMS/$\overline{TRST}$ valid after TCK high | 9 | | ns |

### switching characteristics over recommended operating conditions for JTAG test port (see Figure 59)

| NO. | PARAMETER | | C6202-200 C6202-250 | | C6202B-250 C6202B-300 | | UNIT |
|---|---|---|---|---|---|---|---|
| | | | MIN | MAX | MIN | MAX | |
| 2 | $t_{d(TCKL-TDOV)}$ | Delay time, TCK low to TDO valid | −4.5 | 12 | −4.5 | 13.5 | ns |

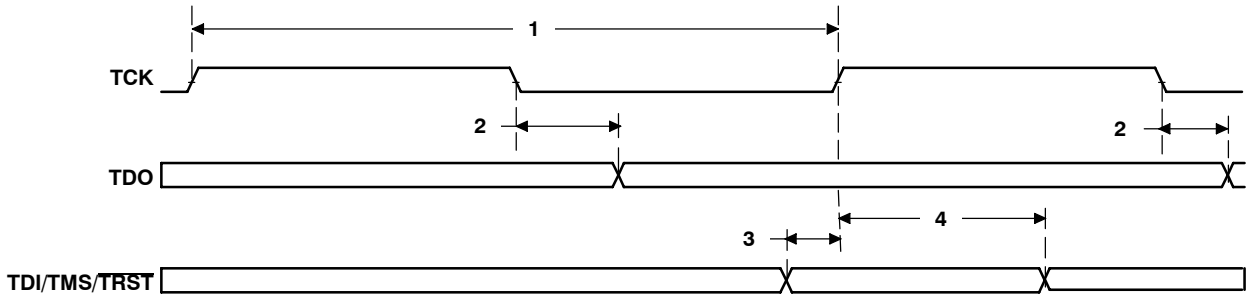


**Figure 59. JTAG Test-Port Timing**

## REVISION HISTORY

This data sheet revision history highlights the technical changes made to the SPRS104H device-specific data sheet to make it an SPRS104I revision.

**SCOPE:** This document has been revised to add information pertaining to power-down mode logic.

| PAGE(S) NO. | ADDITIONS/CHANGES/DELETIONS |
|---|---|
| 12 | memory map summary:<br>Changed the document reference in the last sentence of the paragraph. |
| 13 | peripheral register descriptions:<br>Updated the information regarding the document reference. |
| 18 | DMA synchronization events:<br>Updated the information regarding the document reference. |
| 19 | Table 15, C6202/02B DSP Interrupts:<br>Changed the document reference in the second footnote to:<br>TMS320C6000 DSP Interrupt Selector Reference Guide (literature number SPRU646) |
| 40 | Figure 8, PWRD Field of the CSR Register:<br>Updated the PD1, PD2, and PD3 information that follows Figure 8. |
| 50 | switching characteristics over recommended operating conditions for CLKOUT2 table:<br>Removed NO. 1 (parameter $t_{c(CKO2)}$ ) from the table. |

## THERMAL/MECHANICAL DATA

The mechanical package diagrams that follow the tables reflect the most current released mechanical data available for the designated devices.

### thermal resistance characteristics (GJL-352 S-PBGA package) [C6202 only]

| NO | | | °C/W | Air Flow m/s† |
|---|---|---|---|---|
| 1 | $R\Theta_{JC}$ | Junction-to-case | 0.47 | N/A |
| 2 | $R\Theta_{JA}$ | Junction-to-free air | 14.2 | 0.00 |
| 3 | $R\Theta_{JA}$ | Junction-to-free air | 12.3 | 0.50 |
| 4 | $R\Theta_{JA}$ | Junction-to-free air | 10.9 | 1.00 |
| 5 | $R\Theta_{JA}$ | Junction-to-free air | 9.3 | 2.00 |

† m/s = meters per second

### thermal resistance characteristics (GLS-384 S-PBGA package) ) [C6202 only]

| NO | | | °C/W | Air Flow m/s† |
|---|---|---|---|---|
| 1 | $R\Theta_{JC}$ | Junction-to-case | 0.85 | N/A |
| 2 | $R\Theta_{JA}$ | Junction-to-free air | 21.6 | 0.00 |
| 3 | $R\Theta_{JA}$ | Junction-to-free air | 18.0 | 0.50 |
| 4 | $R\Theta_{JA}$ | Junction-to-free air | 15.5 | 1.00 |
| 5 | $R\Theta_{JA}$ | Junction-to-free air | 12.8 | 2.00 |

† m/s = meters per second

### thermal resistance characteristics (GNZ-352 S-PBGA package) [C6202B only]

| NO | | | °C/W | Air Flow m/s† |
|---|---|---|---|---|
| 1 | $R\Theta_{JC}$ | Junction-to-case | 6.35 | N/A |
| 2 | $R\Theta_{JA}$ | Junction-to-free air | 20.0 | 0.00 |
| 3 | $R\Theta_{JA}$ | Junction-to-free air | 17.0 | 0.50 |
| 4 | $R\Theta_{JA}$ | Junction-to-free air | 16.3 | 1.00 |
| 5 | $R\Theta_{JA}$ | Junction-to-free air | 15.2 | 2.00 |

† m/s = meters per second

### thermal resistance characteristics (GNY-384 S-PBGA package) [C6202B only]

| NO | | | (°C/W) | Air Flow m/s† |
|---|---|---|---|---|
| 1 | $R\Theta_{JC}$ | Junction-to-case | 6.27 | N/A |
| 2 | $R\Theta_{JA}$ | Junction-to-free air | 17.6 | 0.0 |
| 3 | $R\Theta_{JA}$ | Junction-to-free air | 13.9 | 0.5 |
| 4 | $R\Theta_{JA}$ | Junction-to-free air | 13.1 | 1.0 |
| 5 | $R\Theta_{JA}$ | Junction-to-free air | 11.9 | 2.0 |

† m/s = meters per second

## PACKAGING INFORMATION

| Orderable Device | Status (1) | Package Type | Package Drawing | Pins | Package Qty | Eco Plan (2) | Lead/Ball Finish (6) | MSL Peak Temp (3) | Op Temp (°C) | Device Marking (4/5) | Samples |
|---|---|---|---|---|---|---|---|---|---|---|---|
| TMS320C6202BGNY250 | NRND | FC/CSP | GNY | 384 | 90 | TBD | SNPB | Level-4-220C-72 HR | 0 to 90 | TMS320C6202<br>BGNY<br>320C6202B<br>17V | |
| TMS320C6202BGNY300 | NRND | FC/CSP | GNY | 384 | 90 | TBD | SNPB | Level-4-220C-72 HR | 0 to 90 | TMS320C6202<br>BGNY<br>320C6202B<br>15V | |
| TMS320C6202BGNZ300 | ACTIVE | FCBGA | GNZ | 352 | 40 | TBD | SNPB | Level-4-220C-72 HR | 0 to 90 | TMS320<br>C6202BGNZ<br>320C6202B<br>15V | Samples |
| TMS320C6202BZNY250 | ACTIVE | FC/CSP | ZNY | 384 | 90 | Pb-Free (RoHS Exempt) | SNAGCU | Level-4-260C-72HR | 0 to 90 | TMS320C6202<br>BZNY<br>320C6202B<br>17V | Samples |
| TMS320C6202BZNZ250 | ACTIVE | FCBGA | ZNZ | 352 | 40 | Pb-Free (RoHS Exempt) | SNAGCU | Level-4-260C-72HR | 0 to 90 | TMS320<br>C6202BZNZ<br>320C6202B<br>17V | Samples |
| TMS320C6202BZNZ300 | NRND | FCBGA | ZNZ | 352 | 40 | Pb-Free (RoHS Exempt) | SNAGCU | Level-4-260C-72HR | 0 to 90 | TMS320<br>C6202BZNZ<br>320C6202B<br>15V | |
| TMS320C6202GJL200 | NRND | FCBGA | GJL | 352 | 40 | TBD | SNPB | Level-4-220C-72 HR | | TMS320C6202GJL<br>@ 1999 TI<br>320C6202 | |
| TMS320C6202GJLA200 | NRND | FCBGA | GJL | 352 | 40 | TBD | SNPB | Level-4-220C-72 HR | 0 to 0 | TMS320C6202GJL<br>@ 1999 TI<br>320C6202<br>A | |
| TMS320C6202GJLA233 | NRND | FCBGA | GJL | 352 | 40 | TBD | SNPB | Level-4-220C-72 HR | | TMS320C6202GJL<br>@ 1999 TI<br>320C6202<br>A | |
| TMS320C6202GLS250 | NRND | FCBGA | GLS | 384 | 90 | TBD | SNPB | Level-4-220C-72 HR | | TMS320C6202GLS<br>@ 1999 TI | |

| Orderable Device | Status (1) | Package Type | Package Drawing | Pins | Package Qty | Eco Plan (2) | Lead/Ball Finish (6) | MSL Peak Temp (3) | Op Temp (°C) | Device Marking (4/5) | Samples |
|---|---|---|---|---|---|---|---|---|---|---|---|
| | | | | | | | | | | 320C6202<br>250 | |
| TMS32C6202BGNZA250 | ACTIVE | FCBGA | GNZ | 352 | 40 | TBD | SNPB | Level-4-220C-72 HR | -40 to 105 | TMS320C6202<br>@ 1999 TI<br>BGNZA<br>320C6202B | Samples |

(1) The marketing status values are defined as follows:
**ACTIVE:** Product device recommended for new designs.
**LIFEBUY:** TI has announced that the device will be discontinued, and a lifetime-buy period is in effect.
**NRND:** Not recommended for new designs. Device is in production to support existing customers, but TI does not recommend using this part in a new design.
**PREVIEW:** Device has been announced but is not in production. Samples may or may not be available.
**OBSOLETE:** TI has discontinued the production of the device.

(2) **RoHS:** TI defines "RoHS" to mean semiconductor products that are compliant with the current EU RoHS requirements for all 10 RoHS substances, including the requirement that RoHS substance do not exceed 0.1% by weight in homogeneous materials. Where designed to be soldered at high temperatures, "RoHS" products are suitable for use in specified lead-free processes. TI may reference these types of products as "Pb-Free".
**RoHS Exempt:** TI defines "RoHS Exempt" to mean products that contain lead but are compliant with EU RoHS pursuant to a specific EU RoHS exemption.
**Green:** TI defines "Green" to mean the content of Chlorine (Cl) and Bromine (Br) based flame retardants meet JS709B low halogen requirements of <=1000ppm threshold. Antimony trioxide based flame retardants must also meet the <=1000ppm threshold requirement.

(3) MSL, Peak Temp. - The Moisture Sensitivity Level rating according to the JEDEC industry standard classifications, and peak solder temperature.

(4) There may be additional marking, which relates to the logo, the lot trace code information, or the environmental category on the device.

(5) Multiple Device Markings will be inside parentheses. Only one Device Marking contained in parentheses and separated by a "~" will appear on a device. If a line is indented then it is a continuation of the previous line and the two combined represent the entire Device Marking for that device.

(6) Lead/Ball Finish - Orderable Devices may have multiple material finish options. Finish options are separated by a vertical ruled line. Lead/Ball Finish values may wrap to two lines if the finish value exceeds the maximum column width.

**Important Information and Disclaimer:**The information provided on this page represents TI's knowledge and belief as of the date that it is provided. TI bases its knowledge and belief on information provided by third parties, and makes no representation or warranty as to the accuracy of such information. Efforts are underway to better integrate information from third parties. TI has taken and continues to take reasonable steps to provide representative and accurate information but may not have conducted destructive testing or chemical analysis on incoming materials and chemicals. TI and TI suppliers consider certain information to be proprietary, and thus CAS numbers and other limited information may not be available for release.

In no event shall TI's liability arising out of such information exceed the total purchase price of the TI part(s) at issue in this document sold by TI to Customer on an annual basis.

## ZNZ (S–PBGA–N352) PLASTIC BALL GRID ARRAY

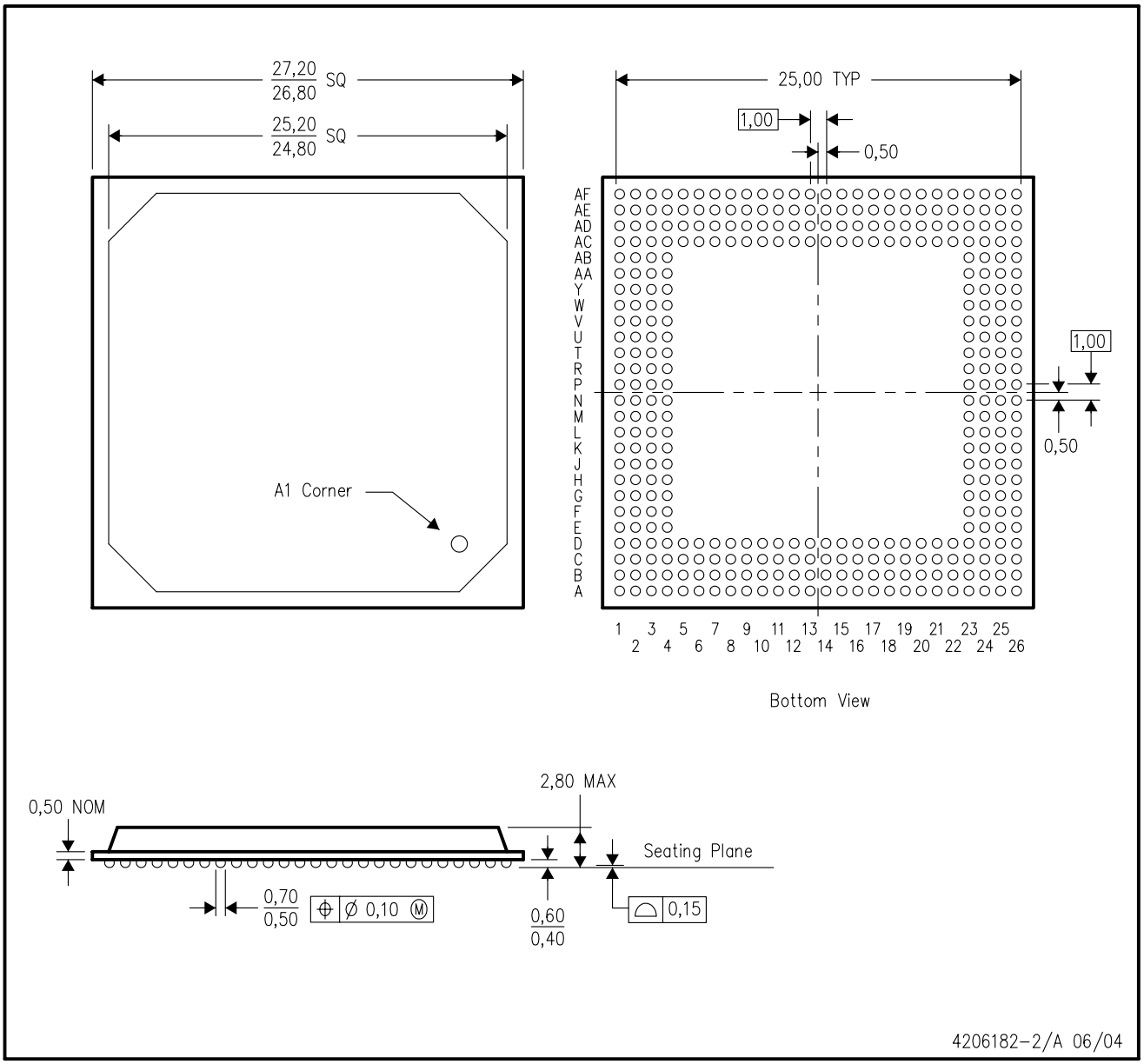


NOTES:
A. All linear dimensions are in millimeters.
B. This drawing is subject to change without notice.
C. Flip chip application only.
D. Substrate color may vary.
E. This package is lead–free.

**GNY (S-PBGA-N384)** **PLASTIC BALL GRID ARRAY**

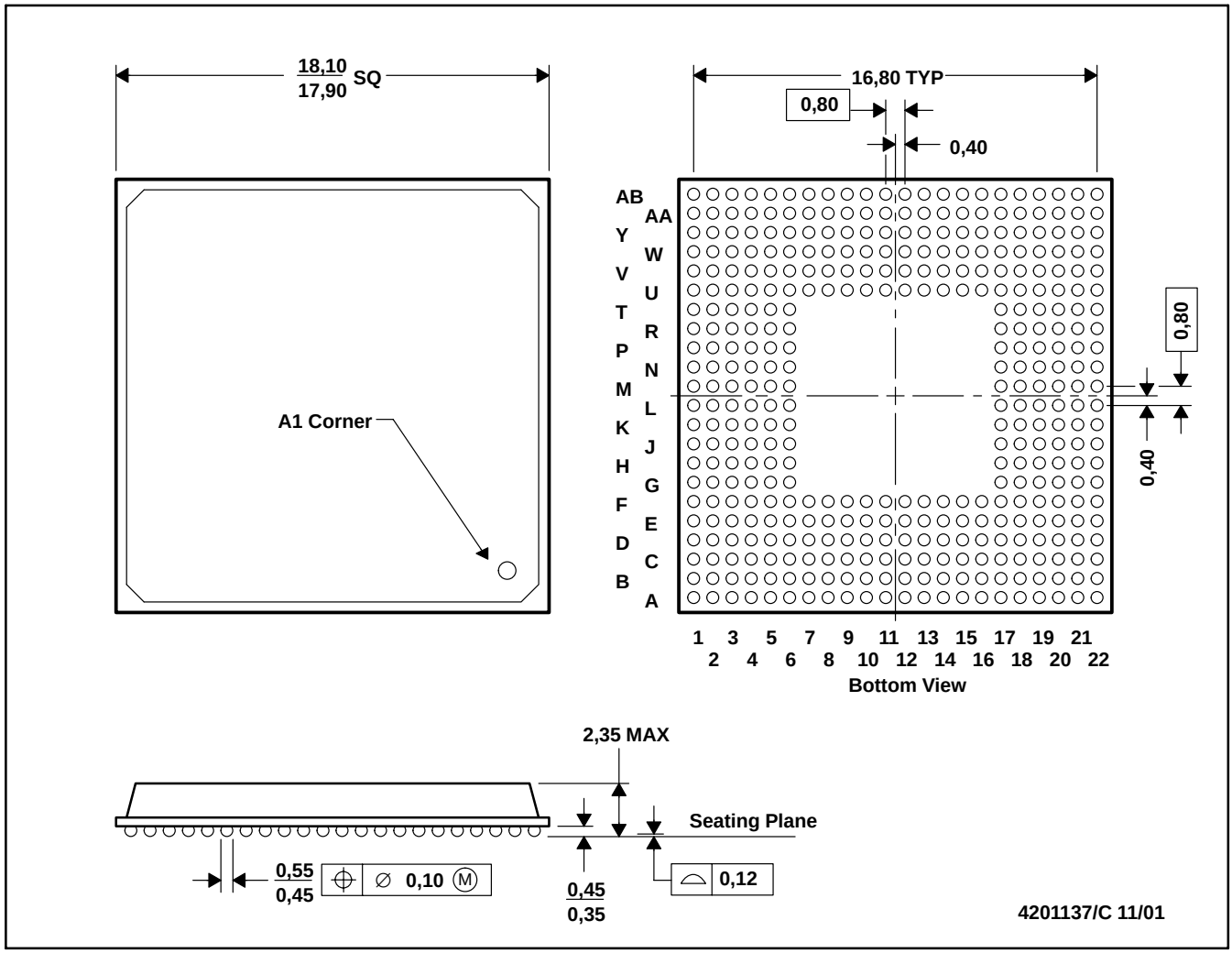


NOTES: A. All linear dimensions are in millimeters.
B. This drawing is subject to change without notice.
C. Flip chip application only
D. Substrate color may vary

**GJL (S-PBGA-N352)** **PLASTIC BALL GRID ARRAY**

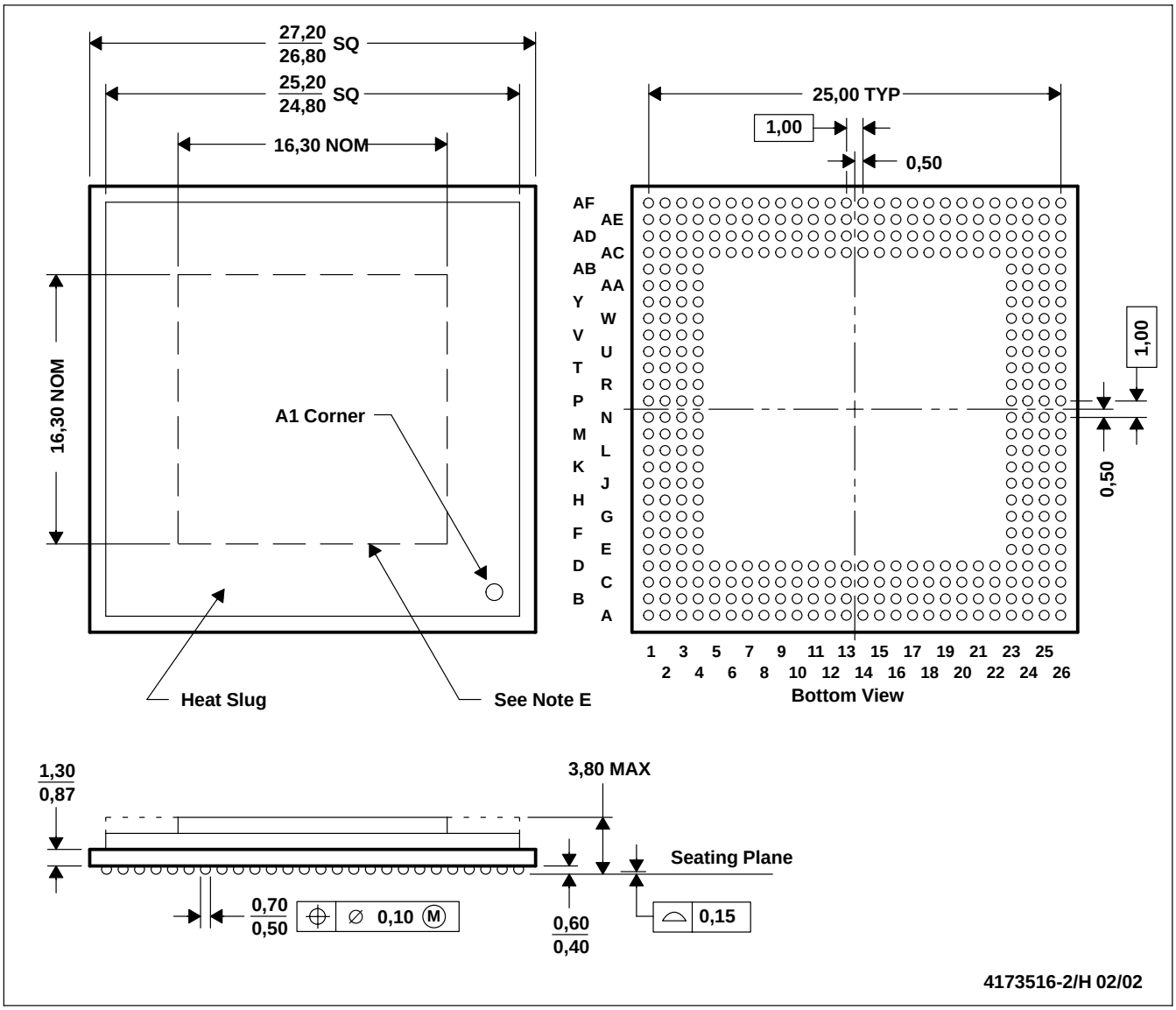


NOTES:
A. All linear dimensions are in millimeters.
B. This drawing is subject to change without notice.
C. Thermally enhanced plastic package with heat slug (HSL)
D. Flip chip application only
E. Possible protrusion in this area, but within 3,50 max package height specification
F. Falls within JEDEC MO-151/AAL-1

GLS (S–PBGA–N384) PLASTIC BALL GRID ARRAY

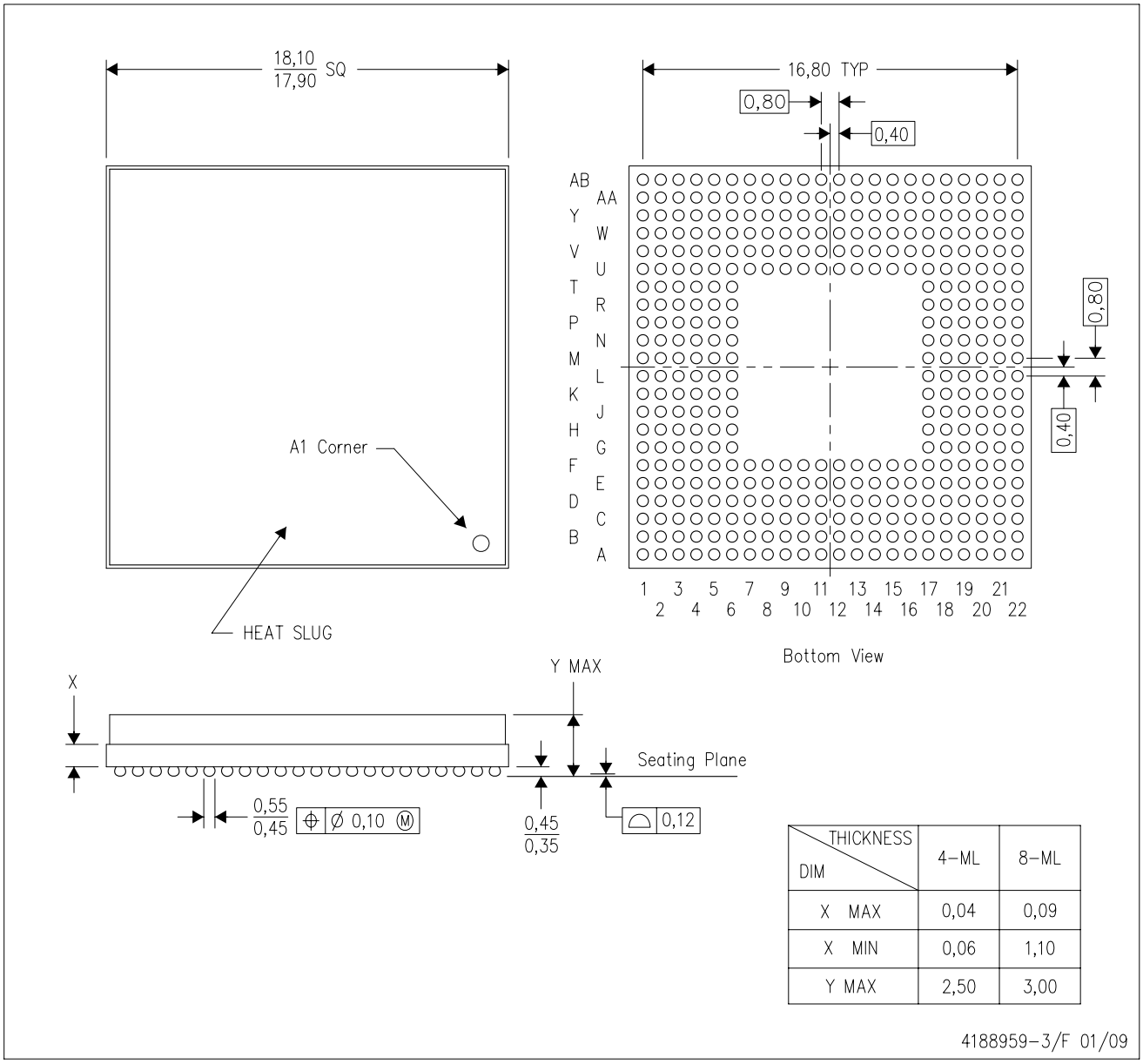


| DIM \ THICKNESS | 4–ML | 8–ML |
|---|---|---|
| X MAX | 0,04 | 0,09 |
| X MIN | 0,06 | 1,10 |
| Y MAX | 2,50 | 3,00 |

NOTES:
A. All linear dimensions are in millimeters.
B. This drawing is subject to change without notice.
C. Thermally enhanced plastic package with heat slug (HSL).
D. Flip chip application only.

**GNZ (S–PBGA–N352)** **PLASTIC BALL GRID ARRAY**

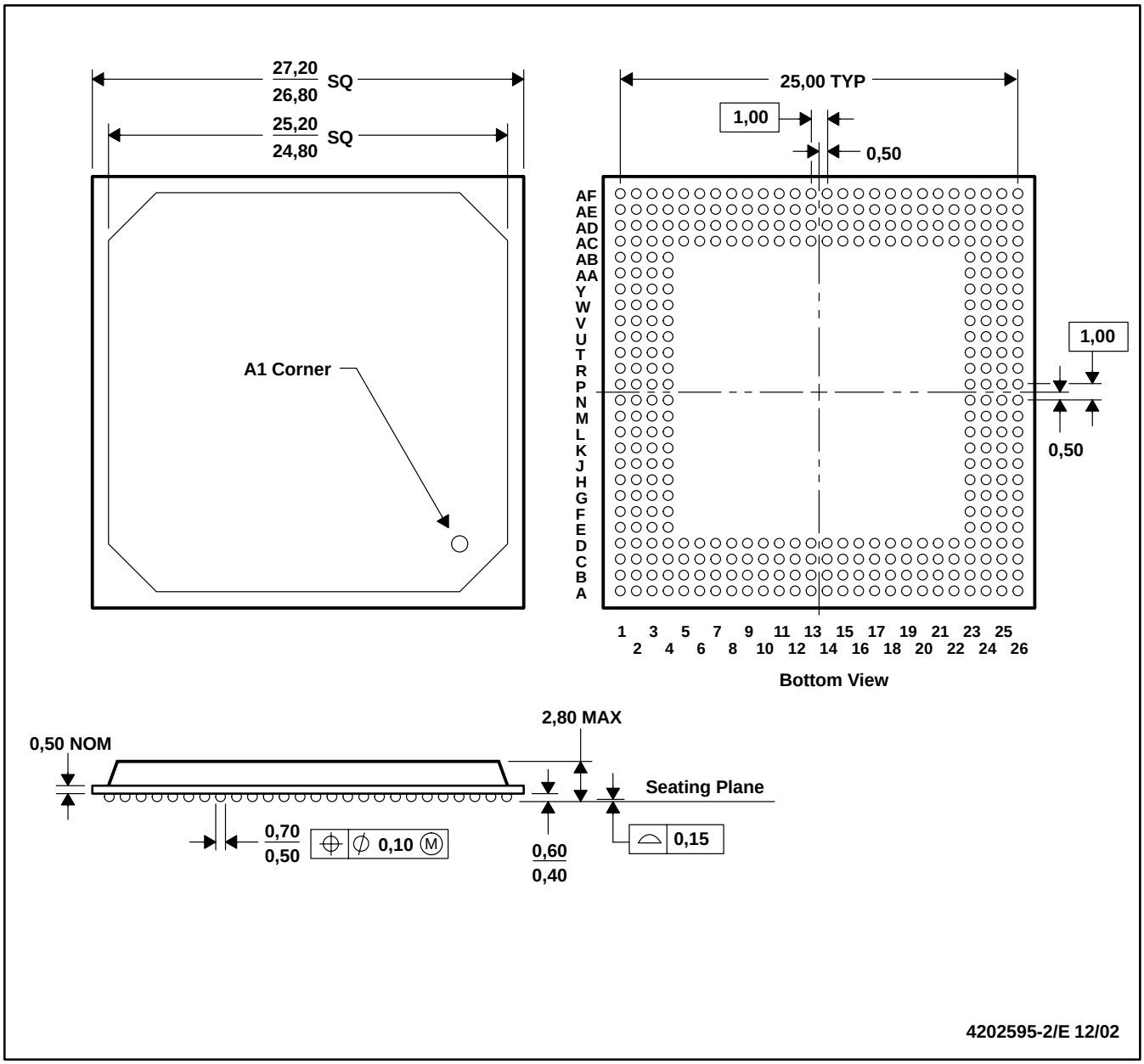


NOTES: A. All linear dimensions are in millimeters.
B. This drawing is subject to change without notice.
C. Flip chip application only.
D. Substrate color may vary.

## ZNY (S–PBGA–N384) PLASTIC BALL GRID ARRAY

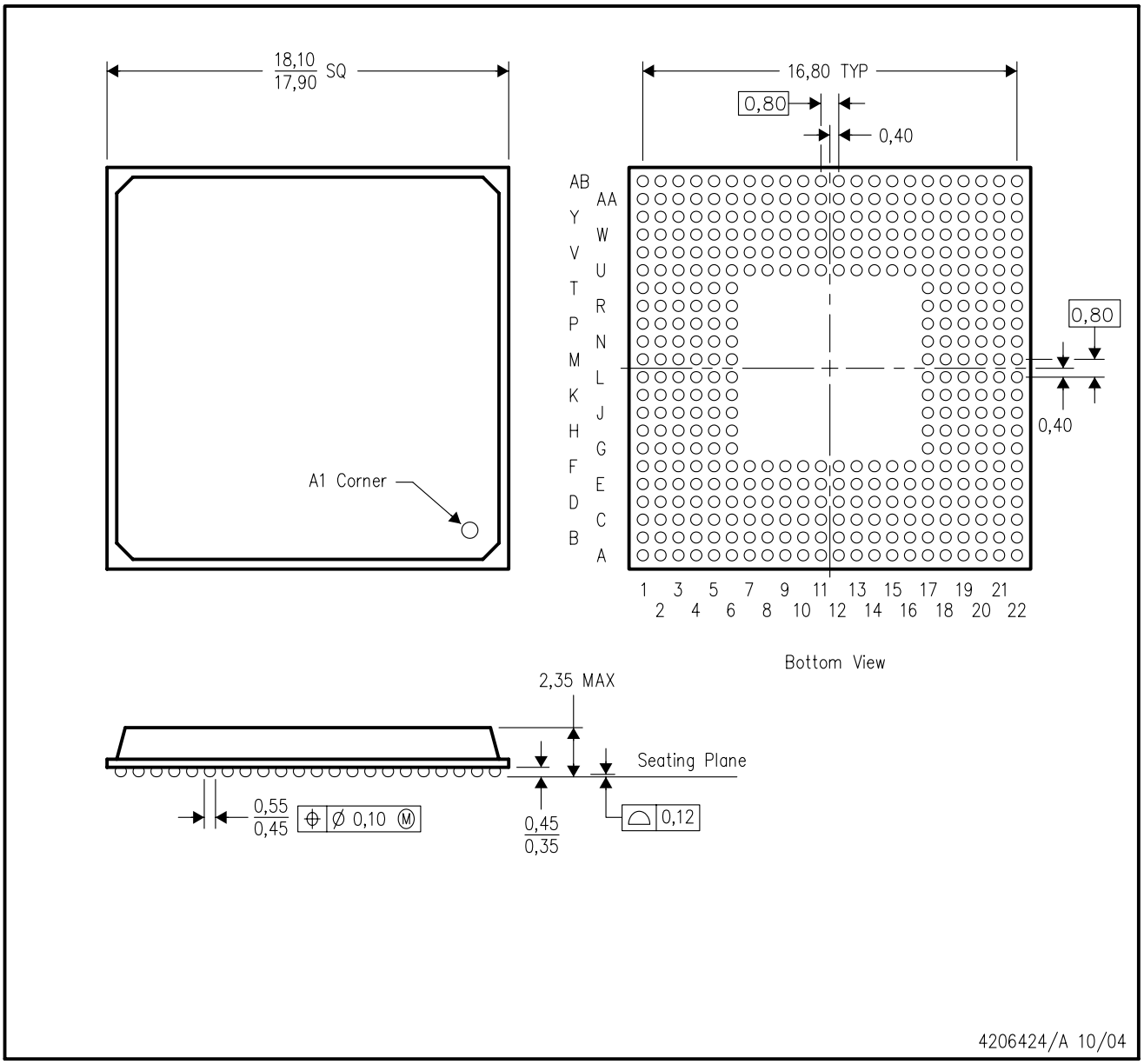


NOTES:
A. All linear dimensions are in millimeters.
B. This drawing is subject to change without notice.
C. Flip chip application only.
D. Substrate color may vary.
E. Pb–Free BGA Ball only.

## IMPORTANT NOTICE AND DISCLAIMER

TI PROVIDES TECHNICAL AND RELIABILITY DATA (INCLUDING DATASHEETS), DESIGN RESOURCES (INCLUDING REFERENCE DESIGNS), APPLICATION OR OTHER DESIGN ADVICE, WEB TOOLS, SAFETY INFORMATION, AND OTHER RESOURCES “AS IS” AND WITH ALL FAULTS, AND DISCLAIMS ALL WARRANTIES, EXPRESS AND IMPLIED, INCLUDING WITHOUT LIMITATION ANY IMPLIED WARRANTIES OF MERCHANTABILITY, FITNESS FOR A PARTICULAR PURPOSE OR NON-INFRINGEMENT OF THIRD PARTY INTELLECTUAL PROPERTY RIGHTS.

These resources are intended for skilled developers designing with TI products. You are solely responsible for (1) selecting the appropriate TI products for your application, (2) designing, validating and testing your application, and (3) ensuring your application meets applicable standards, and any other safety, security, or other requirements. These resources are subject to change without notice. TI grants you permission to use these resources only for development of an application that uses the TI products described in the resource. Other reproduction and display of these resources is prohibited. No license is granted to any other TI intellectual property right or to any third party intellectual property right. TI disclaims responsibility for, and you will fully indemnify TI and its representatives against, any claims, damages, costs, losses, and liabilities arising out of your use of these resources.

TI’s products are provided subject to TI’s Terms of Sale (www.ti.com/legal/termsofsale.html) or other applicable terms available either on ti.com or provided in conjunction with such TI products. TI’s provision of these resources does not expand or otherwise alter TI’s applicable warranties or warranty disclaimers for TI products.

Mailing Address: Texas Instruments, Post Office Box 655303, Dallas, Texas 75265
Copyright © 2019, Texas Instruments Incorporated