TEXAS INSTRUMENTS

# TLV320AIC23B

## Stereo Audio CODEC, 8- to 96-kHz, With Integrated Headphone Amplifier

# Data Manual

February 2004

Digital Audio Products

SLWS106H

# Contents


| Section | Title | Page |
|---|---|---|
| **1** | **Introduction** | **1–1** |
| 1.1 | Features | 1–1 |
| 1.2 | Functional Block Diagram | 1–3 |
| 1.3 | Terminal Assignments | 1–4 |
| 1.4 | Ordering Information | 1–5 |
| 1.5 | Terminal Functions | 1–5 |
| **2** | **Specifications** | **2–1** |
| 2.1 | Absolute Maximum Ratings Over Operating Free-Air Temperature Range | 2–1 |
| 2.2 | Recommended Operating Conditions | 2–1 |
| 2.3 | Electrical Characteristics Over Recommended Operating Conditions | 2–2 |
| 2.3.1 | ADC | 2–2 |
| 2.3.2 | DAC | 2–3 |
| 2.3.3 | Analog Line Input to Line Output (Bypass) | 2–3 |
| 2.3.4 | Stereo Headphone Output | 2–4 |
| 2.3.5 | Analog Reference Levels | 2–4 |
| 2.3.6 | Digital I/O | 2–4 |
| 2.3.7 | Supply Current | 2–4 |
| 2.4 | Digital-Interface Timing | 2–5 |
| 2.4.1 | Audio Interface (Master Mode) | 2–5 |
| 2.4.2 | Audio Interface (Slave-Mode) | 2–6 |
| 2.4.3 | Three-Wire Control Interface (SDIN) | 2–7 |
| 2.4.4 | Two-Wire Control Interface | 2–7 |
| **3** | **How to Use the TLV320AIC23B** | **3–1** |
| 3.1 | Control Interfaces | 3–1 |
| 3.1.1 | SPI | 3–1 |
| 3.1.2 | 2-Wire | 3–1 |
| 3.1.3 | Register Map | 3–2 |
| 3.2 | Analog Interface | 3–5 |
| 3.2.1 | Line Inputs | 3–5 |
| 3.2.2 | Microphone Input | 3–6 |
| 3.2.3 | Line Outputs | 3–6 |
| 3.2.4 | Headphone Output | 3–6 |
| 3.2.5 | Analog Bypass Mode | 3–7 |
| 3.2.6 | Sidetone Insertion | 3–7 |
| 3.3 | Digital Audio Interface | 3–7 |
| 3.3.1 | Digital Audio-Interface Modes | 3–7 |

3.3.2 Audio Sampling Rates . . . . . 3−9
3.3.3 Digital Filter Characteristics . . . . . 3−11
**A Mechanical Data . . . . . A−1**

# List of Illustrations


| Figure | Title | Page |
|---|---|---|
| 2−1 | System-Clock Timing Requirements | 2−5 |
| 2−2 | Master-Mode Timing Requirements | 2−5 |
| 2−3 | Slave-Mode Timing Requirements | 2−6 |
| 2−4 | Three-Wire Control Interface Timing Requirements | 2−7 |
| 2−5 | Two-Wire Control Interface Timing Requirements | 2−7 |
| 3−1 | SPI Timing | 3−1 |
| 3−2 | 2-Wire Compatible Timing | 3−2 |
| 3−3 | Analog Line Input Circuit | 3−5 |
| 3−4 | Microphone Input Circuit | 3−6 |
| 3−5 | Right-Justified Mode Timing | 3−7 |
| 3−6 | Left-Justified Mode Timing | 3−8 |
| 3−7 | I2S Mode Timing | 3−8 |
| 3−8 | DSP Mode Timing | 3−8 |
| 3−9 | Digital De-Emphasis Filter Response − 44.1 kHz Sampling | 3−12 |
| 3−10 | Digital De-Emphasis Filter Response − 48 kHz Sampling | 3−12 |
| 3−11 | ADC Digital Filter Response 0: USB Mode (Group Delay = 12 Output Samples) | 3−13 |
| 3−12 | ADC Digital Filter Ripple 0: USB (Group Delay = 20 Output Samples) | 3−13 |
| 3−13 | ADC Digital Filter Response 1: USB Mode Only | 3−14 |
| 3−14 | ADC Digital Filter Ripple 1: USB Mode Only | 3−14 |
| 3−15 | ADC Digital Filter Response 2: USB mode and Normal Modes (Group Delay = 3 Output Samples) | 3−15 |
| 3−16 | ADC Digital Filter Ripple 2: USB Mode and Normal Modes | 3−15 |
| 3−17 | ADC Digital Filter Response 3: USB Mode Only | 3−16 |
| 3−18 | ADC Digital Filter Ripple 3: USB Mode Only | 3−16 |
| 3−19 | DAC Digital Filter Response 0: USB Mode | 3−17 |
| 3−20 | DAC Digital Filter Ripple 0: USB Mode | 3−17 |
| 3−21 | DAC Digital Filter Response 1: USB Mode Only | 3−18 |
| 3−22 | DAC Digital Filter Ripple 1: USB Mode Only | 3−18 |
| 3−23 | DAC Digital Filter Response 2: USB Mode and Normal Modes | 3−19 |
| 3−24 | DAC Digital Filter Ripple 2: USB Mode and Normal Modes | 3−19 |
| 3−25 | DAC Digital Filter Response 3: USB Mode Only | 3−20 |
| 3−26 | DAC Digital Filter Ripple 3: USB Mode Only | 3−20 |

# 1 Introduction

The TLV320AIC23B is a high-performance stereo audio codec with highly integrated analog functionality. The analog-to-digital converters (ADCs) and digital-to-analog converters (DACs) within the TLV320AIC23B use multibit sigma-delta technology with integrated oversampling digital interpolation filters. Data-transfer word lengths of 16, 20, 24, and 32 bits, with sample rates from 8 kHz to 96 kHz, are supported. The ADC sigma-delta modulator features third-order multibit architecture with up to 90-dBA signal-to-noise ratio (SNR) at audio sampling rates up to 96 kHz, enabling high-fidelity audio recording in a compact, power-saving design. The DAC sigma-delta modulator features a second-order multibit architecture with up to 100-dBA SNR at audio sampling rates up to 96 kHz, enabling high-quality digital audio-playback capability, while consuming less than 23 mW during playback only. The TLV320AIC23B is the ideal analog input/output (I/O) choice for portable digital audio-player and recorder applications, such as MP3 digital audio players.

Integrated analog features consist of stereo-line inputs with an analog bypass path, a stereo headphone amplifier, with analog volume control and mute, and a complete electret-microphone-capsule biasing and buffering solution. The headphone amplifier is capable of delivering 30 mW per channel into 32 Ω. The analog bypass path allows use of the stereo-line inputs and the headphone amplifier with analog volume control, while completely bypassing the codec, thus enabling further design flexibility, such as integrated FM tuners. A microphone bias-voltage output provides a low-noise current source for electret-capsule biasing. The AIC23B has an integrated adjustable microphone amplifier (gain adjustable from 1 to 5) and a programmable gain microphone amplifier (0 dB or 20 dB). The microphone signal can be mixed with the output signals if a sidetone is required.

While the TLV320AIC23B supports the industry-standard oversampling rates of 256 $f_S$ and 384 $f_S$, unique oversampling rates of 250 $f_S$ and 272 $f_S$ are provided, which optimize interface considerations in designs using TI C54x digital signal processors (DSPs) and universal serial bus (USB) data interfaces. A single 12-MHz crystal can supply clocking to the DSP, USB, and codec. The TLV320AIC23B features an internal oscillator that, when connected to a 12-MHz external crystal, provides a system clock to the DSP and other peripherals at either 12 MHz or 6 MHz, using an internal clock buffer and selectable divider. Audio sample rates of 48 kHz and compact-disc (CD) standard 44.1 kHz are supported directly from a 12-MHz master clock with 250 $f_S$ and 272 $f_S$ oversampling rates.

Low power consumption and flexible power management allow selective shutdown of codec functions, thus extending battery life in portable applications. This design solution, coupled with the industry's smallest package, the TI proprietary MicroStar Junior™ using only 25 $mm^2$ of board area, makes powerful portable stereo audio designs easily realizable in a cost-effective, space-saving total analog I/O solution: the TLV320AIC23B.

## 1.1 Features

- High-Performance Stereo *Codec*
  - 90-dB SNR Multibit Sigma-Delta ADC (A-weighted at 48 kHz)
  - 100-dB SNR Multibit Sigma-Delta DAC (A-weighted at 48 kHz)
  - 1.42 V – 3.6 V Core Digital Supply: Compatible With TI C54x DSP Core Voltages
  - 2.7 V – 3.6 V Buffer and Analog Supply: Compatible Both TI C54x DSP Buffer Voltages
  - 8-kHz – 96-kHz Sampling-Frequency Support
- Software Control Via TI McBSP-Compatible Multiprotocol Serial Port
  - 2-wire-Compatible and SPI-Compatible Serial-Port Protocols
  - Glueless Interface to TI McBSPs
- Audio-Data Input/Output Via TI McBSP-Compatible Programmable Audio Interface
  - $I^2S$-Compatible Interface Requiring Only One McBSP for both ADC and DAC
  - Standard $I^2S$, MSB, or LSB Justified-Data Transfers
  - 16/20/24/32-Bit Word Lengths

MicroStar Junior is a trademark of Texas Instruments.

- Audio Master/Slave Timing Capability Optimized for TI DSPs (250/272 $f_S$), USB mode
- Industry-Standard Master/Slave Support Provided Also (256/384 $f_S$), Normal mode
- Glueless Interface to TI McBSPs

- Integrated Total Electret-Microphone Biasing and Buffering Solution
  - Low-Noise MICBIAS pin at 3/4 AVDD for Biasing of Electret Capsules
  - Integrated Buffer Amplifier With Tunable Fixed Gain of 1 to 5
  - Additional Control-Register Selectable Buffer Gain of 0 dB or 20 dB
- Stereo-Line Inputs
  - Integrated Programmable Gain Amplifier
  - Analog Bypass Path of Codec
- ADC Multiplexed Input for Stereo-Line Inputs and Microphone
- Stereo-Line Outputs
  - Analog Stereo Mixer for DAC and Analog Bypass Path
- Volume Control With Mute on Input and Output
- Highly Efficient Linear Headphone Amplifier
  - 30 mW into 32 Ω From a 3.3-V Analog Supply Voltage
- Flexible Power Management Under Total Software Control
  - 23-mW Power Consumption During Playback Mode
  - Standby Power Consumption <150 μW
  - Power-Down Power Consumption <15 μW
- Industry's Smallest Package: 32-Pin TI Proprietary MicroStar Junior™
  - 25 $mm^2$ Total Board Area
  - 28-Pin TSSOP Also Is Available (62 $mm^2$ Total Board Area)
- Ideally Suitable for Portable Solid-State Audio Players and Recorders

## 1.2 Functional Block Diagram

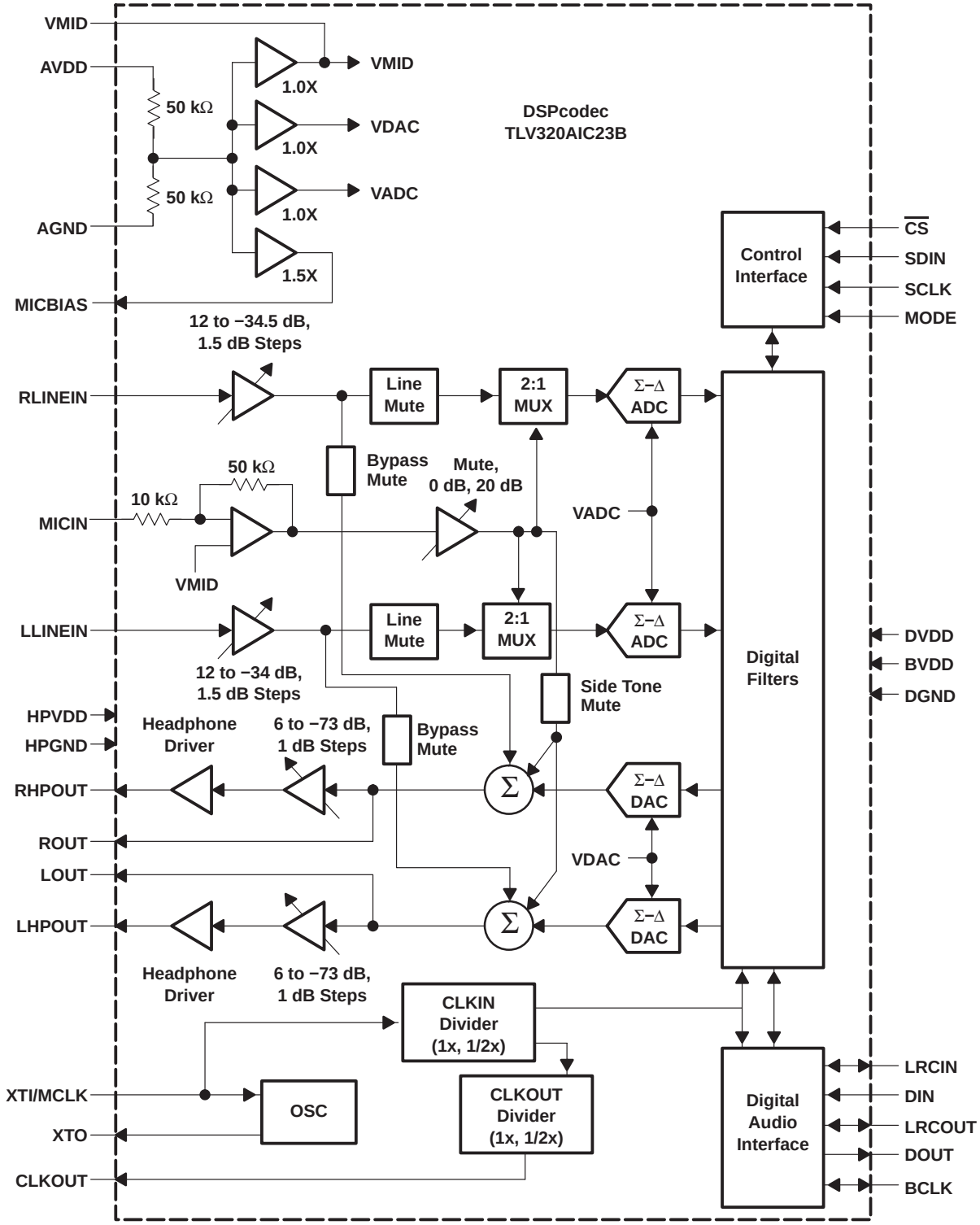


NOTE: MCLK, BCLK, and SCLK are all asynchronous to each other.

## 1.3 Terminal Assignments

**GQE/ZQE PACKAGE**
**(TOP VIEW)**

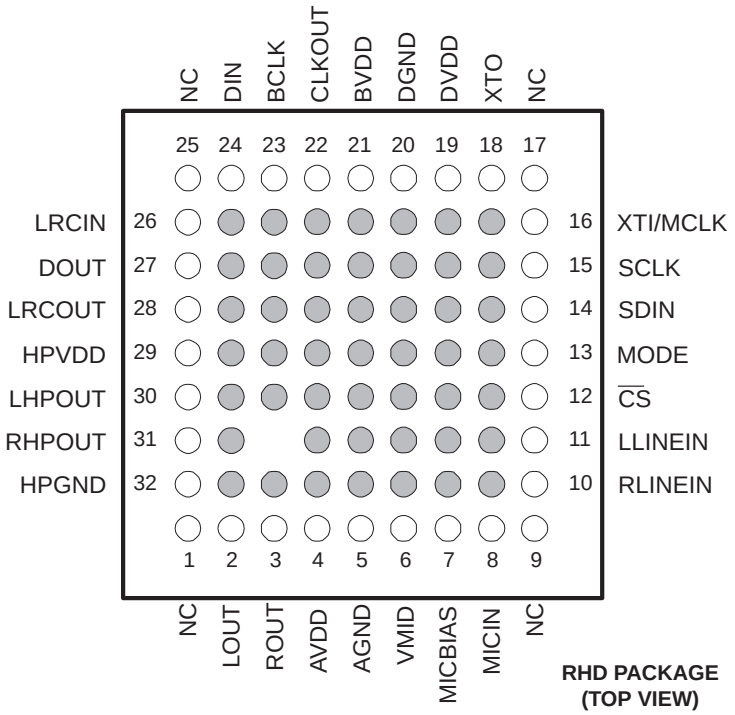


NC − No internal connection

**PW PACKAGE**
**(TOP VIEW)**

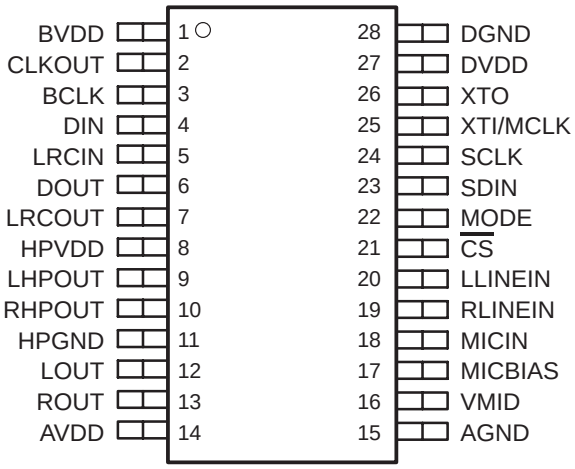


**RHD PACKAGE**
**(TOP VIEW)**

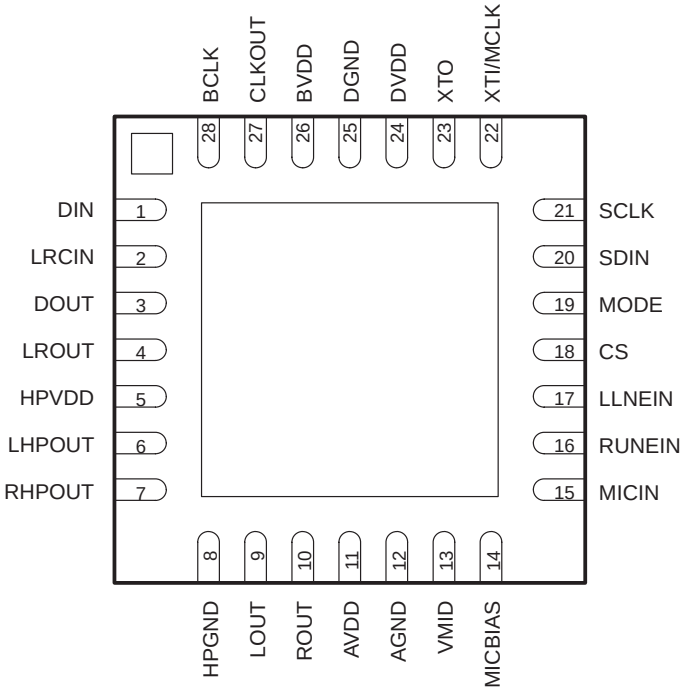

## 1.4 Ordering Information

| $T_A$ | PACKAGE | | |
|---|---|---|---|
| | 32-Pin MicroStar Junior GQE/ZQE | 28-Pin TSSOP PW | 28-Pin PQFP RHD |
| −10°C to 70°C | TLV320AIC23BGQE/ZQE | TLV320AIC23BPW | TLV320AIC23BRHD |
| −40°C to 85°C | TLV320AIC23BIGQE/ZQE | TLV320AIC23BIPW | TLV320AIC23BIRHD |

## 1.5 Terminal Functions

| TERMINAL | | | | I/O | DESCRIPTION |
|---|---|---|---|---|---|
| NAME | NO. | | | | |
| | GQE/ ZQE | PW | RHD | | |
| AGND | 5 | 15 | 12 | | Analog supply return |
| AVDD | 4 | 14 | 11 | | Analog supply input. Voltage level is 3.3 V nominal. |
| BCLK | 23 | 3 | 28 | I/O | $I^2S$ serial-bit clock. In audio master mode, the AIC23B generates this signal and sends it to the DSP. In audio slave mode, the signal is generated by the DSP. |
| BVDD | 21 | 1 | 26 | | Buffer supply input. Voltage range is from 2.7 V to 3.6 V. |
| CLKOUT | 22 | 2 | 27 | O | Clock output. This is a buffered version of the XTI input and is available in 1X or 1/2X frequencies of XTI. Bit 07 in the sample rate control register controls frequency selection. |
| $\overline{CS}$ | 12 | 21 | 18 | I | Control port input latch/address select. For SPI control mode this input acts as the data latch control. For 2-wire control mode this input defines the seventh bit in the device address field. See Section 3.1 for details. |
| DIN | 24 | 4 | 1 | I | $I^2S$ format serial data input to the sigma-delta stereo DAC |
| DGND | 20 | 28 | 25 | | Digital supply return |
| DOUT | 27 | 6 | 3 | O | $I^2S$ format serial data output from the sigma-delta stereo ADC |
| DVDD | 19 | 27 | 24 | | Digital supply input. Voltage range is 1.4 V to 3.6 V. |
| HPGND | 32 | 11 | 8 | | Analog headphone amplifier supply return |
| HPVDD | 29 | 8 | 5 | | Analog headphone amplifier supply input. Voltage level is 3.3 V nominal. |
| LHPOUT | 30 | 9 | 6 | O | Left stereo mixer-channel amplified headphone output. Nominal 0-dB output level is 1 $V_{RMS}$. Gain of –73 dB to 6 dB is provided in 1-dB steps. |
| LLINEIN | 11 | 20 | 17 | I | Left stereo-line input channel. Nominal 0-dB input level is 1 $V_{RMS}$. Gain of –34.5 dB to 12 dB is provided in 1.5-dB steps. |
| LOUT | 2 | 12 | 9 | O | Left stereo mixer-channel line output. Nominal output level is 1.0 $V_{RMS}$. |
| LRCIN | 26 | 5 | 2 | I/O | $I^2S$ DAC-word clock signal. In audio master mode, the AIC23B generates this framing signal and sends it to the DSP. In audio slave mode, the signal is generated by the DSP. |
| LRCOUT | 28 | 7 | 4 | I/O | $I^2S$ ADC-word clock signal. In audio master mode, the AIC23B generates this framing signal and sends it to the DSP. In audio slave mode, the signal is generated by the DSP. |
| MICBIAS | 7 | 17 | 14 | O | Buffered low-noise-voltage output suitable for electret-microphone-capsule biasing. Voltage level is 3/4 AVDD nominal. |
| MICIN | 8 | 18 | 15 | I | Buffered amplifier input suitable for use with electret-microphone capsules. Without external resistors a default gain of 5 is provided. See Section 2.3.1.2 for details. |
| MODE | 13 | 22 | 19 | I | Serial-interface-mode input. See Section 3.1 for details. |
| NC | 1, 9 17, 25 | | | | Not Used—No internal connection |
| RHPOUT | 31 | 10 | 7 | O | Right stereo mixer-channel amplified headphone output. Nominal 0-dB output level is 1 $V_{RMS}$. Gain of −73 dB to 6 dB is provided in 1-dB steps. |
| RLINEIN | 10 | 19 | 16 | I | Right stereo-line input channel. Nominal 0-dB input level is 1 $V_{RMS}$. Gain of –34.5 dB to 12 dB is provided in 1.5-dB steps. |
| ROUT | 3 | 13 | 10 | O | Right stereo mixer-channel line output. Nominal output level is 1.0 $V_{RMS}$. |

## 1.5 Terminal Functions (continued)

| TERMINAL | | | | I/O | DESCRIPTION |
|---|---|---|---|---|---|
| NAME | NO. | | | | |
| | GQE/ ZQE | PW | RHD | | |
| SCLK | 15 | 24 | 21 | I | Control-port serial-data clock. For SPI and 2-wire control modes this is the serial-clock input. See Section 3.1 for details. |
| SDIN | 14 | 23 | 20 | I | Control-port serial-data input. For SPI and 2-wire control modes this is the serial-data input and also is used to select the control protocol after reset. See Section 3.1 for details. |
| VMID | 6 | 16 | 13 | I | Midrail voltage decoupling input. 10-µF and 0.1-µF capacitors should be connected in parallel to this terminal for noise filtering. Voltage level is 1/2 AVDD nominal. |
| XTI/MCLK | 16 | 25 | 22 | I | Crystal or external-clock input. Used for derivation of all internal clocks on the AIC23B. |
| XTO | 18 | 26 | 23 | O | Crystal output. Connect to external crystal for applications where the AIC23B is the audio timing master. Not used in applications where external clock source is used. |

# 2 Specifications

## 2.1 Absolute Maximum Ratings Over Operating Free-Air Temperature Range (unless otherwise noted)†

Supply voltage range, $AV_{DD}$ to AGND, $DV_{DD}$ to DGND, $BV_{DD}$ to DGND, $HPV_{DD}$ to HPGND (see Note 1) . . . . . −0.3 V to + 3.63 V
Analog supply return to digital supply return, AGND to DGND . . . . . −0.3 V to + 3 .63 V
Input voltage range, all input signals: Digital . . . . . −0.3 V to $DV_{DD}$ + 0.3 V
Analog . . . . . −0.3 V to $AV_{DD}$ + 0.3 V
Case temperature for 10 seconds . . . . . 240°C
Operating free-air temperature range, $T_A$: Commercial . . . . . −10°C to 70°C
Industrial . . . . . −40°C to 85°C
Storage temperature range, $T_{stg}$ . . . . . −65°C to 150°C

† Stresses beyond those listed under “absolute maximum ratings” may cause permanent damage to the device. These are stress ratings only, and functional operation of the device at these or any other conditions beyond those indicated under “recommended operating conditions” is not implied. Exposure to absolute-maximum-rated conditions for extended periods may affect device reliability.

NOTE 1: $DV_{DD}$ may not exceed $BV_{DD}$ + 0.3V; $BV_{DD}$ may not exceed $AV_{DD}$ + 0.3V or $HPV_{DD}$ + 0.3.

## 2.2 Recommended Operating Conditions

| | | MIN | NOM | MAX | UNIT |
|---|---|---|---|---|---|
| Analog supply voltage, $AV_{DD}$, $HPV_{DD}$ (see Note 2) | | 2.7 | 3.3 | 3.6 | V |
| Digital buffer supply voltage, $BV_{DD}$ (see Note 2) | | 2.7 | 3.3 | 3.6 | V |
| Digital core supply voltage, $DV_{DD}$ (see Note 2) | | 1.42 | 1.5 | 3.6 | V |
| Analog input voltage, full scale − 0dB ($AV_{DD}$ = 3.3 V) | | | 1 | | $V_{RMS}$ |
| Stereo-line output load resistance | | 10 | | | kΩ |
| Headphone-amplifier output load resistance | | 0 | | | Ω |
| CLKOUT digital output load capacitance | | | 20 | | pF |
| All other digital output load capacitance | | | 10 | | pF |
| Stereo-line output load capacitance | | | 50 | | pF |
| XTI master clock Input | | | | 18.43 | MHz |
| ADC or DAC conversion rate | | | | 96 | kHz |
| Operating free-air temperature, $T_A$ | Commercial | −10 | | 70 | °C |
| | Industrial | −40 | | 85 | |

NOTE 2: Digital voltage values are with respect to DGND; analog voltage values are with respect to AGND.

## 2.3 Electrical Characteristics Over Recommended Operating Conditions, $AV_{DD}$, $HPV_{DD}$, $BV_{DD}$ = 3.3 V, $DV_{DD}$ = 1.5 V, Slave Mode, XTI/MCLK = 256fs, $f_S$ = 48 kHz (unless otherwise stated)

### 2.3.1 ADC

#### 2.3.1.1 Line Input to ADC

| PARAMETER | TEST CONDITIONS | MIN | TYP | MAX | UNIT |
|---|---|---|---|---|---|
| Input signal level (0 dB) | | | 1 | | $V_{RMS}$ |
| Signal-to-noise ratio, A-weighted, 0-dB gain (see Notes 3 and 4) | $f_S$ = 48 kHz (3.3 V) | 85 | 90 | | dB |
| | $f_S$ = 48 kHz (2.7 V) | | 90 | | |
| Dynamic range, A-weighted, −60-dB full-scale input (see Note 4) | $AV_{DD}$ = 3.3 V | 85 | 90 | | dB |
| | $AV_{DD}$ = 2.7 V | | 90 | | |
| Total harmonic distortion, −1-dB input, 0-dB gain | $AV_{DD}$ = 3.3 V | | –80 | | dB |
| | $AV_{DD}$ = 2.7 V | | 80 | | |
| Power supply rejection ratio | 1 kHz, 100 $mV_{pp}$ | | 50 | | dB |
| ADC channel separation | 1 kHz input tone | | 90 | | dB |
| Programmable gain | 1 kHz input tone, $R_{SOURCE}$ < 50 Ω | –34.5 | | 12 | dB |
| Programmable gain step size | Monotonic | | 1.5 | | dB |
| Mute attenuation | 0 dB, 1 kHz input tone | | 80 | | dB |
| Input resistance | 12 dB Input gain | 10 | | 20 | kΩ |
| | 0 dB input gain | 30 | 35 | | |
| Input capacitance | | | 10 | | pF |

NOTES: 3. Ratio of output level with 1-kHz full-scale input, to the output level with the input short circuited, measured A-weighted over a 20-Hz to 20-kHz bandwidth using an audio analyzer.
4. All performance measurements done with 20-kHz low-pass filter and, where noted, A-weighted filter. Failure to use such a filter results in higher THD + N and lower SNR and dynamic range readings than shown in the Electrical Characteristics. The low-pass filter removes out-of-band noise, which, although not audible, may affect dynamic specification values.

#### 2.3.1.2 Microphone Input to ADC, 0-dB Gain, $f_S$ = 8 kHz (40-KΩ Source Impedance, see Section 1.2, *Functional Block Diagram*)

| PARAMETER | TEST CONDITIONS | MIN | TYP | MAX | UNIT |
|---|---|---|---|---|---|
| Input signal level (0 dB) | | | 1.0 | | $V_{RMS}$ |
| Signal-to-noise ratio, A-weighted, 0-dB gain (see Notes 3 and 4) | $AV_{DD}$ = 3.3 V | 80 | 85 | | dB |
| | $AV_{DD}$ = 2.7 V | | 84 | | |
| Dynamic range, A-weighted, −60-dB full-scale input (see Note 4) | $AV_{DD}$ = 3.3 V | 80 | 85 | | dB |
| | $AV_{DD}$ = 2.7 V | | 84 | | |
| Total harmonic distortion, −1-dB input, 0-dB gain | $AV_{DD}$ = 3.3 V | | –60 | | dB |
| | $AV_{DD}$ = 2.7 V | | −60 | | |
| Power supply rejection ratio | 1 kHz, 100 $mV_{pp}$ | | 50 | | dB |
| Programmable gain boost | 1 kHz input tone, $R_{SOURCE}$ < 50 Ω | | 20 | | dB |
| Microphone-path gain | MICBOOST = 0, $R_{SOURCE}$ < 50 Ω | | 14 | | dB |
| Mute attenuation | 0 dB, 1 kHz input tone | 60 | 80 | | dB |
| Input resistance | | 8 | 14 | | kΩ |
| Input capacitance | | | 10 | | pF |

NOTES: 3. Ratio of output level with 1-kHz full-scale input, to the output level with the input short circuited, measured A-weighted over a 20-Hz to 20-kHz bandwidth using an audio analyzer.
4. All performance measurements done with 20-kHz low-pass filter and, where noted, A-weighted filter. Failure to use such a filter results in higher THD + N and lower SNR and dynamic range readings than shown in the Electrical Characteristics. The low-pass filter removes out-of-band noise, which, although not audible, may affect dynamic specification values.

#### 2.3.1.3 Microphone Bias

| PARAMETER | TEST CONDITIONS | MIN | TYP | MAX | UNIT |
|---|---|---|---|---|---|
| Bias voltage | | 3/4 AVDD − 100 m | 3/4 AVDD | 3/4 AVDD + 100 m | V |
| Bias-current source | | | | 3 | mA |
| Output noise voltage | 1 kHz to 20 kHz | | 25 | | nV/√Hz |

### 2.3.2 DAC

#### 2.3.2.1 Line Output, Load = 10 kΩ, 50 pF

| PARAMETER | TEST CONDITIONS | | MIN | TYP | MAX | UNIT |
|---|---|---|---|---|---|---|
| 0-dB full-scale output voltage (FFFFFF) | | | | 1.0 | | $V_{RMS}$ |
| Signal-to-noise ratio, A-weighted, 0-dB gain (see Notes 3, 4, and 5) | $AV_{DD}$ = 3.3 V | $f_S$ = 48kHz | 90 | 100 | | dB |
| | $AV_{DD}$ = 2.7 V | $f_S$ = 48 kHz | | 100 | | |
| Dynamic range, A-weighted (see Note 4) | $AV_{DD}$ = 3.3 V | | 85 | 90 | | dB |
| | $AV_{DD}$ = 2.7 V | | | TBD | | |
| Total harmonic distortion | $AV_{DD}$ = 3.3 V | 1 kHz, 0 dB | | –88 | –80 | dB |
| | | 1 kHz, −3 dB | | −92 | −86 | |
| | $AV_{DD}$ = 2.7 V | 1 kHz, 0 dB | | −85 | | dB |
| | | 1 kHz, −3 dB | | −88 | | |
| Power supply rejection ratio | 1 kHz, 100 $mV_{pp}$ | | | 50 | | dB |
| DAC channel separation | | | | 100 | | dB |

NOTES: 3. Ratio of output level with 1-kHz full-scale input, to the output level with the input short circuited, measured A-weighted over a 20-Hz to 20-kHz bandwidth using an audio analyzer.
4. All performance measurements done with 20-kHz low-pass filter and, where noted, A-weighted filter. Failure to use such a filter results in higher THD + N and lower SNR and dynamic range readings than shown in the Electrical Characteristics. The low-pass filter removes out-of-band noise, which, although not audible, may affect dynamic specification values.
5. Ratio of output level with 1-kHz full-scale input, to the output level with all zeros into the digital input, measured A-weighted over a 20-Hz to 20-kHz bandwidth.

### 2.3.3 Analog Line Input to Line Output (Bypass)

| PARAMETER | TEST CONDITIONS | | MIN | TYP | MAX | UNIT |
|---|---|---|---|---|---|---|
| 0-dB full-scale output voltage | | | | 1.0 | | $V_{RMS}$ |
| Signal-to-noise ratio, A-weighted, 0-dB gain (see Notes 3 and 4) | $AV_{DD}$ = 3.3 V | | 90 | 95 | | dB |
| | $AV_{DD}$ = 2.7 V | | | 95 | | |
| Total harmonic distortion | $AV_{DD}$ = 3.3 V | 1 kHz, 0 dB | | –86 | –80 | dB |
| | | 1 kHz, −3 dB | | −92 | −86 | |
| | $AV_{DD}$ = 2.7 V | 1 kHz, 0 dB | | −86 | | dB |
| | | 1 kHz, −3 dB | | −92 | | |
| Power supply rejection ratio | 1 kHz, 100 $mV_{pp}$ | | | 50 | | dB |
| DAC channel separation (left to right) | 1 kHz, 0 dB | | | 80 | | dB |

NOTES: 3. Ratio of output level with 1-kHz full-scale input, to the output level with the input short circuited, measured A-weighted over a 20-Hz to 20-kHz bandwidth using an audio analyzer.
4. All performance measurements done with 20-kHz low-pass filter and, where noted, A-weighted filter. Failure to use such a filter results in higher THD + N and lower SNR and dynamic range readings than shown in the Electrical Characteristics. The low-pass filter removes out-of-band noise, which, although not audible, may affect dynamic specification values.

### 2.3.4 Stereo Headphone Output

| PARAMETER | TEST CONDITIONS | | MIN | TYP | MAX | UNIT |
|---|---|---|---|---|---|---|
| 0-dB full-scale output voltage | | | | 1.0 | | $V_{RMS}$ |
| Maximum output power, $P_O$ | $R_L$ = 32 Ω | | | 30 | | mW |
| | $R_L$ = 16 Ω | | | 40 | | |
| Signal-to-noise ratio, A-weighted (see Note 4) | $AV_{DD}$ = 3.3 V | | 90 | 97 | | dB |
| Total harmonic distortion | $AV_{DD}$ = 3.3 V, 1 kHz output | $P_O$ = 10 mW | | | 0.1 | % |
| | | $P_O$ = 20 mW | | | 1.0 | |
| Power supply rejection ratio | 1 kHz, 100 $mV_{pp}$ | | | 50 | | dB |
| Programmable gain | 1 kHz output | | −73 | | 6 | dB |
| Programmable-gain step size | | | | 1 | | dB |
| Mute attenuation | 1 kHz output | | | 80 | | dB |

NOTE 4: All performance measurements done with 20-kHz low-pass filter and, where noted, A-weighted filter. Failure to use such a filter results in higher THD + N and lower SNR and dynamic range readings than shown in the Electrical Characteristics. The low-pass filter removes out-of-band noise, which, although not audible, may affect dynamic specification values.

### 2.3.5 Analog Reference Levels

| PARAMETER | MIN | TYP | MAX | UNIT |
|---|---|---|---|---|
| Reference voltage | AVDD/2 − 50 mV | | AVDD/2 + 50 mV | V |
| Divider resistance | 40 | 50 | 60 | kΩ |

### 2.3.6 Digital I/O

| PARAMETER | | MIN | TYP | MAX | UNIT |
|---|---|---|---|---|---|
| $V_{IL}$ | Input low level | | | $0.3 \times BV_{DD}$ | V |
| $V_{IH}$ | Input high level | $0.7 \times BV_{DD}$ | | | V |
| $V_{OL}$ | Output low level | | | $0.1 \times BV_{DD}$ | V |
| $V_{OH}$ | Output high level | $0.9 \times BV_{DD}$ | | | V |

### 2.3.7 Supply Current

| PARAMETER | | TEST CONDITIONS | | MIN | TYP | MAX | UNIT |
|---|---|---|---|---|---|---|---|
| $I_{TOT}$ | Total supply current, No input signal | Record and playback (all active) | | 20 | 24 | 26 | mA |
| | | Record and playback (osc, clk, and MIC output powered down) | | 16 | 18 | 20 | |
| | | Line playback only | | 6 | 7.5 | 9 | |
| | | Record only | | 11 | 13.5 | 15 | |
| | | Analog bypass (line in to line out) | | 4 | 4.5 | 6 | |
| | | Power down, $DV_{DD}$ = 1.5 V, $AV_{DD}$ = $BV_{DD}$ = $HPV_{DD}$ = 3.3 V | Oscillator enabled | 0.8 | 1.5 | 3 | |
| | | | Oscillator disabled | | 0.01 | | |

## 2.4 Digital-Interface Timing

| PARAMETER | | | MIN | TYP | MAX | UNIT |
|---|---|---|---|---|---|---|
| $t_{w(1)}$ | System-clock pulse duration, MCLK/XTI | High | 18 | | | ns |
| $t_{w(2)}$ | | Low | 18 | | | |
| $t_{c(1)}$ | System-clock period, MCLK/XTI | | 54 | | | ns |
| | Duty cycle, MCLK/XTI | | 40/60% | | 60/40% | |
| $t_{pd(1)}$ | Propagation delay, CLKOUT | | 0 | | 10 | ns |

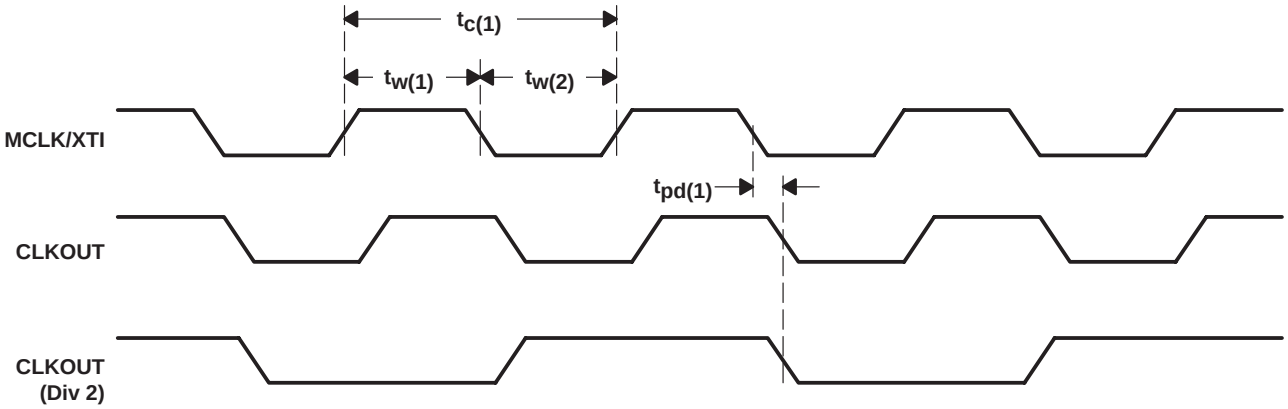


**Figure 2−1. System-Clock Timing Requirements**

### 2.4.1 Audio Interface (Master Mode)

| PARAMETER | | MIN | TYP | MAX | UNIT |
|---|---|---|---|---|---|
| $t_{pd(2)}$ | Propagation delay, LRCIN/LRCOUT | 0 | | 10 | ns |
| $t_{pd(3)}$ | Propagation delay, DOUT | 0 | | 10 | ns |
| $t_{su(1)}$ | Setup time, DIN | 10 | | | ns |
| $t_{h(1)}$ | Hold time, DIN | 10 | | | ns |

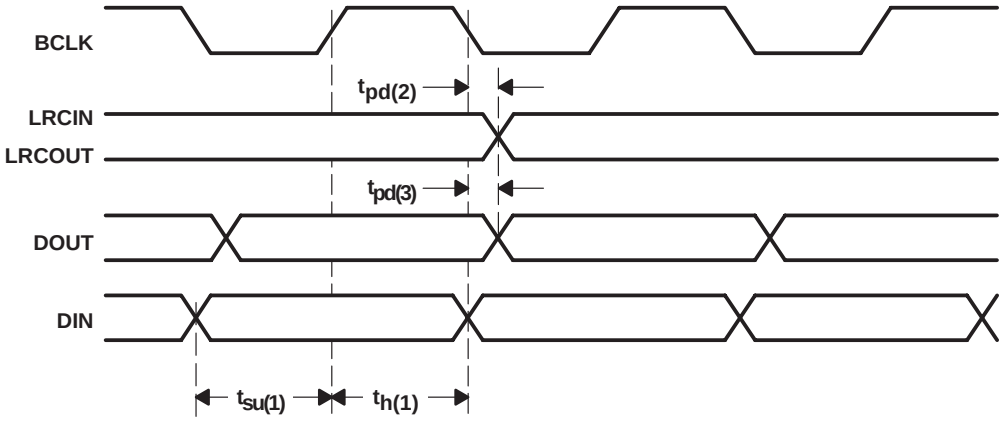


**Figure 2−2. Master-Mode Timing Requirements**

### 2.4.2 Audio Interface (Slave-Mode)

| PARAMETER | | | MIN | TYP | MAX | UNIT |
|---|---|---|---|---|---|---|
| $t_{w(3)}$ | Pulse duration, BCLK | High | 20 | | | ns |
| $t_{w(4)}$ | | Low | 20 | | | |
| $t_{c(2)}$ | Clock period, BCLK | | 50 | | | ns |
| $t_{pd(4)}$ | Propagation delay, DOUT | | 0 | | 10 | ns |
| $t_{su(2)}$ | Setup time, DIN | | 10 | | | ns |
| $t_{h(2)}$ | Hold time, DIN | | 10 | | | ns |
| $t_{su(3)}$ | Setup time, LRCIN | | 10 | | | ns |
| $t_{h(3)}$ | Hold time, LRCIN | | 10 | | | ns |

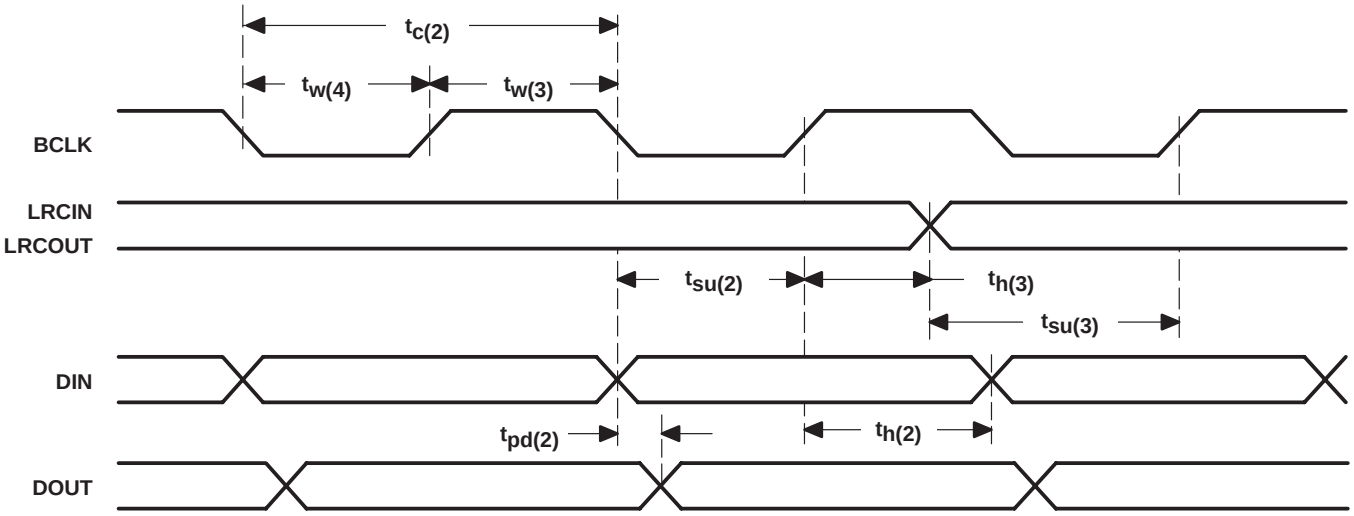


**Figure 2−3. Slave-Mode Timing Requirements**

### 2.4.3 Three-Wire Control Interface (SDIN)

| PARAMETER | | | MIN | TYP | MAX | UNIT |
|---|---|---|---|---|---|---|
| $t_{w(5)}$ | Clock pulse duration, SCLK | High | 20 | | | ns |
| $t_{w(6)}$ | | Low | 20 | | | |
| $t_{c(3)}$ | Clock period, SCLK | | 80 | | | ns |
| $t_{su(4)}$ | Clock rising edge to $\overline{CS}$ rising edge, SCLK | | 60 | | | ns |
| $t_{su(5)}$ | Setup time, SDIN to SCLK | | 20 | | | ns |
| $t_{h(4)}$ | Hold time, SCLK to SDIN | | 20 | | | ns |
| $t_{w(7)}$ | Pulse duration, $\overline{CS}$ | High | 20 | | | ns |
| $t_{w(8)}$ | | Low | 20 | | | |

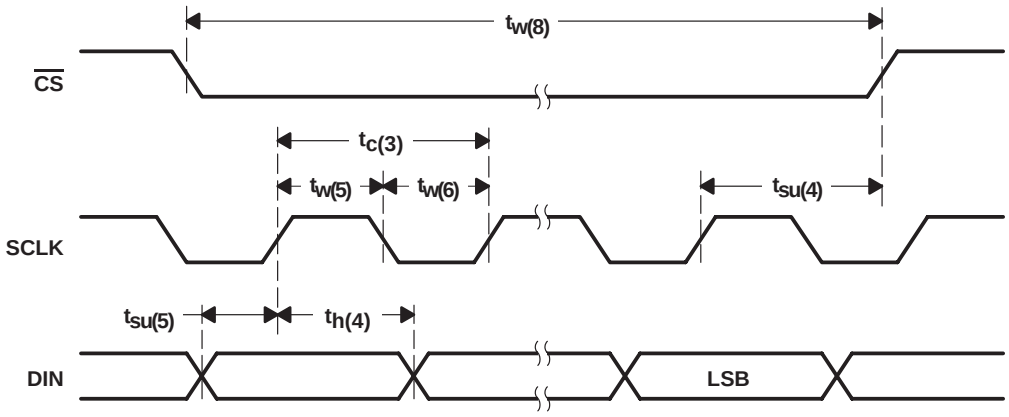


**Figure 2−4. Three-Wire Control Interface Timing Requirements**

### 2.4.4 Two-Wire Control Interface

| PARAMETER | | | MIN | TYP | MAX | UNIT |
|---|---|---|---|---|---|---|
| $t_{w(9)}$ | Clock pulse duration, SCLK | High | 1.3 | | | µs |
| $t_{w(10)}$ | | Low | 600 | | | ns |
| f(sf) | Clock frequency, SCLK | | 0 | | 400 | kHz |
| $t_{h(5)}$ | Hold time (start condition) | | 600 | | | ns |
| $t_{su(6)}$ | Setup time (start condition) | | 600 | | | ns |
| $t_{h(6)}$ | Data hold time | | | | 900 | ns |
| $t_{su(7)}$ | Data setup time | | 100 | | | ns |
| $t_r$ | Rise time, SDIN, SCLK | | | | 300 | ns |
| $t_f$ | Fall time, SDIN, SCLK | | | | 300 | ns |
| $t_{su(8)}$ | Setup time (stop condition) | | 600 | | | ns |
| $t_{sp}$ | Pulse width of spikes suppressed by input filter | | 0 | 50 | | ns |

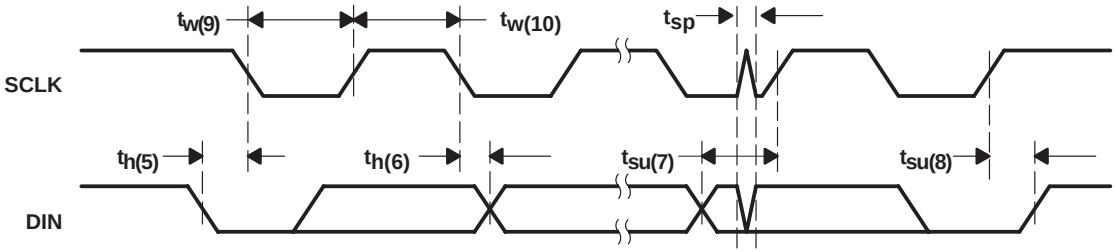


**Figure 2−5. Two-Wire Control Interface Timing Requirements**

# 3 How to Use the TLV320AIC23B

## 3.1 Control Interfaces

The TLV320AIC23B has many programmable features. The control interface is used to program the registers of the device. The control interface complies with SPI (three-wire operation) and two-wire operation specifications. The state of the MODE terminal selects the control interface type. The MODE pin must be hardwired to the required level.

| MODE | INTERFACE |
|---|---|
| 0 | 2-wire |
| 1 | SPI |

### 3.1.1 SPI

In SPI mode, SDIN carries the serial data, SCLK is the serial clock and $\overline{CS}$ latches the data word into the TLV320AIC23B. The interface is compatible with microcontrollers and DSPs with an SPI interface.

A control word consists of 16 bits, starting with the MSB. The data bits are latched on the rising edge of SCLK. A rising edge on $\overline{CS}$ after the 16th rising clock edge latches the data word into the AIC (see Figure 3-1).

The control word is divided into two parts. The first part is the address block, the second part is the data block:

B[15:9] Control Address Bits
B[8:0] Control Data Bits

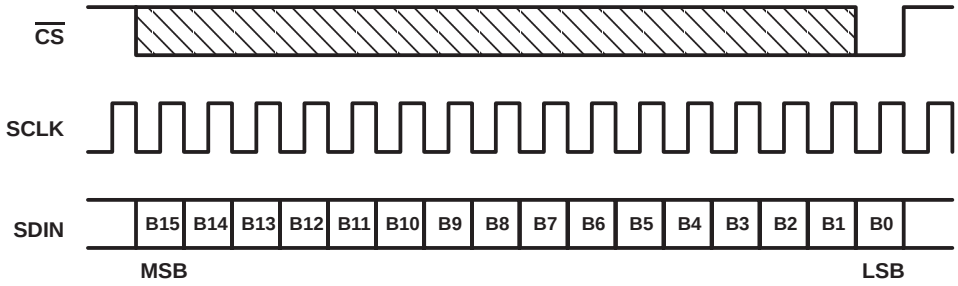


**Figure 3−1. SPI Timing**

### 3.1.2 2-Wire

In 2-wire mode, the data transfer uses SDIN for the serial data and SCLK for the serial clock. The start condition is a falling edge on SDIN while SCLK is high. The seven bits following the start condition determine which device on the 2-wire bus receives the data. R/W determines the direction of the data transfer. The TLV320AIC23B is a write only device and responds only if R/W is 0. The device operates only as a slave device whose address is selected by setting the state of the CS pin as follows.

| $\overline{CS}$ STATE (Default = 0) | ADDRESS |
|---|---|
| 0 | 0011010 |
| 1 | 0011011 |

The device that recognizes the address responds by pulling SDIN low during the ninth clock cycle, acknowledging the data transfer. The control follows in the next two eight-bit blocks. The stop condition after the data transfer is a rising edge on SDIN when SCLK is high (see Figure 3-2).

The 16-bit control word is divided into two parts. The first part is the address block, the second part is the data block:

| | |
|---|---|
| B[15:9] | Control Address Bits |
| B[8:0] | Control Data Bits |

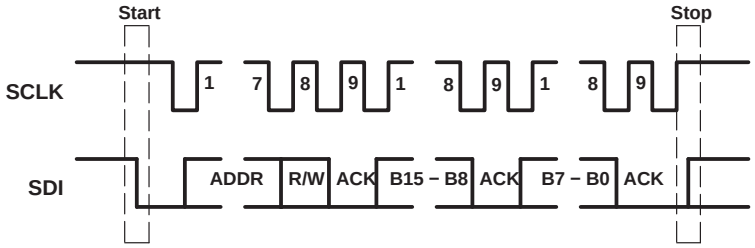


**Figure 3−2. 2-Wire Compatible Timing**

### 3.1.3 Register Map

The TLV320AIC23B has the following set of registers, which are used to program the modes of operation.

| ADDRESS | REGISTER |
|---|---|
| 0000000 | Left line input channel volume control |
| 0000001 | Right line input channel volume control |
| 0000010 | Left channel headphone volume control |
| 0000011 | Right channel headphone volume control |
| 0000100 | Analog audio path control |
| 0000101 | Digital audio path control |
| 0000110 | Power down control |
| 0000111 | Digital audio interface format |
| 0001000 | Sample rate control |
| 0001001 | Digital interface activation |
| 0001111 | Reset register |

Left line input channel volume control (Address: 0000000)

| BIT | D8 | D7 | D6 | D5 | D4 | D3 | D2 | D1 | D0 |
|---|---|---|---|---|---|---|---|---|---|
| Function | LRS | LIM | X | X | LIV4 | LIV3 | LIV2 | LIV1 | LIV0 |
| Default | 0 | 1 | 0 | 0 | 1 | 0 | 1 | 1 | 1 |

| | | | |
|---|---|---|---|
| LRS | Left/right line simultaneous volume/mute update | | |
| | Simultaneous update | 0 = Disabled | 1 = Enabled |
| LIM | Left line input mute | 0 = Normal | 1 = Muted |
| LIV[4:0] | Left line input volume control (10111 = 0 dB default) | | |
| | 11111 = +12 dB down to 00000 = –34.5 dB in 1.5-dB steps | | |
| X | Reserved | | |

Right Line Input Channel Volume Control (Address: 0000001)

| BIT | D8 | D7 | D6 | D5 | D4 | D3 | D2 | D1 | D0 |
|---|---|---|---|---|---|---|---|---|---|
| Function | RLS | RIM | X | X | RIV4 | RIV3 | RIV2 | RIV1 | RIV0 |
| Default | 0 | 1 | 0 | 0 | 1 | 0 | 1 | 1 | 1 |

RLS — Right/left line simultaneous volume/mute update
Simultaneous update — 0 = Disabled — 1 = Enabled
RIM — Right line input mute — 0 = Normal — 1 = Muted
RIV[4:0] — Right line input volume control (10111 = 0 dB default)
11111 = +12 dB down to 00000 = –34.5 dB in 1.5-dB steps
X — Reserved

Left Channel Headphone Volume Control (Address: 0000010)

| BIT | D8 | D7 | D6 | D5 | D4 | D3 | D2 | D1 | D0 |
|---|---|---|---|---|---|---|---|---|---|
| Function | LRS | LZC | LHV6 | LHV5 | LHV4 | LHV3 | LHV2 | LHV1 | LHV0 |
| Default | 0 | 1 | 1 | 1 | 1 | 1 | 0 | 0 | 1 |

LRS — Left/right headphone channel simultaneous volume/mute update
Simultaneous update — 0 = Disabled — 1 = Enabled
LZC — Left-channel zero-cross detect
Zero-cross detect — 0 = Off — 1 = On
LHV[6:0] — Left Headphone volume control (1111001 = 0 dB default)
1111111 = +6 dB, 79 steps between +6 dB and −73 dB (mute), 0110000 = −73 dB (mute), any thing below 0110000 does nothing − you are still muted

Right Channel Headphone Volume Control (Address: 0000011)

| BIT | D8 | D7 | D6 | D5 | D4 | D3 | D2 | D1 | D0 |
|---|---|---|---|---|---|---|---|---|---|
| Function | RLS | RZC | RHV6 | RHV5 | RHV4 | RHV3 | RHV2 | RHV1 | RHV0 |
| Default | 0 | 1 | 1 | 1 | 1 | 1 | 0 | 0 | 1 |

RLS — Right/left headphone channel simultaneous volume/mute Update
Simultaneous update — 0 = Disabled — 1 = Enabled
RZC — Right-channel zero-cross detect
Zero-cross detect — 0 = Off — 1 = On
RHV[6:0] — Right headphone volume control (1111001 = 0 dB default)
1111111 = +6 dB, 79 steps between +6 dB and −73 dB (mute), 0110000 = −73 dB (mute), any thing below 0110000 does nothing − you are still muted

Analog Audio Path Control (Address: 0000100)

| BIT | D8 | D7 | D6 | D5 | D4 | D3 | D2 | D1 | D0 |
|---|---|---|---|---|---|---|---|---|---|
| Function | STA2 | STA1 | STA0 | STE | DAC | BYP | INSEL | MICM | MICB |
| Default | 0 | 0 | 0 | 0 | 0 | 1 | 0 | 1 | 0 |

STA[2:0] and STE

| STE | STA2 | STA1 | STA0 | ADDED SIDETONE |
|---|---|---|---|---|
| 1 | 1 | X | X | 0 dB |
| 1 | 0 | 0 | 0 | −6 dB |
| 1 | 0 | 0 | 1 | −9 dB |
| 1 | 0 | 1 | 0 | −12 dB |
| 1 | 0 | 1 | 1 | −18 dB |
| 0 | X | X | X | Disabled |

DAC — DAC select — 0 = DAC off — 1 = DAC selected
BYP — Bypass — 0 = Disabled — 1 = Enabled

| | | | |
|---|---|---|---|
| INSEL | Input select for ADC | 0 = Line | 1 = Microphone |
| MICM | Microphone mute | 0 = Normal | 1 = Muted |
| MICB | Microphone boost | 0=dB | 1 = 20dB |

X Reserved

Digital Audio Path Control (Address: 0000101)

| BIT | D8 | D7 | D6 | D5 | D4 | D3 | D2 | D1 | D0 |
|---|---|---|---|---|---|---|---|---|---|
| Function | X | X | X | X | X | DACM | DEEMP1 | DEEMP0 | ADCHP |
| Default | 0 | 0 | 0 | 0 | 0 | 1 | 0 | 0 | 0 |

| | | | | | |
|---|---|---|---|---|---|
| DACM | DAC soft mute | 0 = Disabled | 1 = Enabled | | |
| DEEMP[1:0] | De-emphasis control | 00 = Disabled | 01 = 32 kHz | 10 = 44.1 kHz | 11 = 48 kHz |
| ADCHP | ADC high-pass filter | 1 = Disabled | 0 = Enabled | | |
| X | Reserved | | | | |

Power Down Control (Address: 0000110)

| BIT | D8 | D7 | D6 | D5 | D4 | D3 | D2 | D1 | D0 |
|---|---|---|---|---|---|---|---|---|---|
| Function | X | OFF | CLK | OSC | OUT | DAC | ADC | MIC | LINE |
| Default | 0 | 0 | 0 | 0 | 0 | 0 | 1 | 1 | 1 |

| | | | |
|---|---|---|---|
| OFF | Device power | 0 = On | 1 = Off |
| CLK | Clock | 0 = On | 1 = Off |
| OSC | Oscillator | 0 = On | 1 = Off |
| OUT | Outputs | 0 = On | 1 = Off |
| DAC | DAC | 0 = On | 1 = Off |
| ADC | ADC | 0 = On | 1 = Off |
| MIC | Microphone input | 0 = On | 1 = Off |
| LINE | Line input | 0 = On | 1 = Off |
| X | Reserved | | |

Digital Audio Interface Format (Address: 0000111)

| BIT | D8 | D7 | D6 | D5 | D4 | D3 | D2 | D1 | D0 |
|---|---|---|---|---|---|---|---|---|---|
| Function | X | X | MS | LRSWAP | LRP | IWL1 | IWL0 | FOR1 | FOR0 |
| Default | 0 | 0 | 0 | 0 | 0 | 0 | 0 | 0 | 1 |

| | | | | | |
|---|---|---|---|---|---|
| MS | Master/slave mode | 0 = Slave | 1 = Master | | |
| LRSWAP | DAC left/right swap | 0 = Disabled | 1 = Enabled | | |
| LRP | DAC left/right phase | 0 = Right channel on, LRCIN high | | | |
| | | 1 = Right channel on, LRCIN low | | | |
| | | DSP mode | | | |
| | | 1 = MSB is available on 2nd BCLK rising edge after LRCIN rising edge | | | |
| | | 0 = MSB is available on 1st BCLK rising edge after LRCIN rising edge | | | |
| IWL[1:0] | Input bit length | 00 = 16 bit | 01 = 20 bit | 10 = 24 bit | 11 = 32 bit |
| FOR[1:0] | Data format | 11 = DSP format, frame sync followed by two data words | | | |
| | | 10 = $I^2S$ format, MSB first, left – 1 aligned | | | |
| | | 01 = MSB first, left aligned | | | |
| | | 00 = MSB first, right aligned | | | |
| X | Reserved | | | | |

NOTES:
1. In Master mode, the TLV320AIC23B supplies the BCLK, LRCOUT, and LRCIN. In Slave mode, BCLK, LRCOUT, and LRCIN are supplied to the TLV320AIC23B.
2. In normal mode, BCLK = MCLK/4 for all sample rates except for 88.2 kHz and 96 kHz. For 88.2 kHz and 96 kHz sample rate, BCLK = MCLK.
3. In USB mode, bit BCLK = MCLK

Sample Rate Control (Address: 0001000)

| BIT | D8 | D7 | D6 | D5 | D4 | D3 | D2 | D1 | D0 |
|---|---|---|---|---|---|---|---|---|---|
| Function | X | CLKOUT | CLKIN | SR3 | SR2 | SR1 | SR0 | BOSR | USB/Normal |
| Default | 0 | 0 | 0 | 1 | 0 | 0 | 0 | 0 | 0 |

| | | | |
|---|---|---|---|
| CLKIN | Clock input divider | 0 = MCLK | 1 = MCLK/2 |
| CLKOUT | Clock output divider | 0 = MCLK | 1 = MCLK/2 |
| SR[3:0] | Sampling rate control (see Sections 3.3.2.1 AND 3.3.2.2) | | |
| BOSR | Base oversampling rate | | |
| | USB mode: | 0 = 250 $f_S$ | 1 = 272 $f_S$ |
| | Normal mode: | 0 = 256 $f_S$ | 1 = 384 $f_S$ |
| USB/Normal | Clock mode select: | 0 = Normal | 1 = USB |
| X | Reserved | | |

Digital Interface Activation (Address: 0001001)

| BIT | D8 | D7 | D6 | D5 | D4 | D3 | D2 | D1 | D0 |
|---|---|---|---|---|---|---|---|---|---|
| Function | X | RES | RES | X | X | X | X | X | ACT |
| Default | 0 | 0 | 0 | 0 | 0 | 0 | 0 | 0 | 0 |

| | | | |
|---|---|---|---|
| ACT | Activate interface | 0 = Inactive | 1 = Active |
| X | Reserved | | |

Reset Register (Address: 0001111)

| BIT | D8 | D7 | D6 | D5 | D4 | D3 | D2 | D1 | D0 |
|---|---|---|---|---|---|---|---|---|---|
| Function | RES | RES | RES | RES | RES | RES | RES | RES | RES |
| Default | 0 | 0 | 0 | 0 | 0 | 0 | 0 | 0 | 0 |

RES Write 000000000 to this register triggers reset

## 3.2 Analog Interface

### 3.2.1 Line Inputs

The TLV320AIC23B has line inputs for the left and the right audio channels (RLINEIN and LLINEIN). Both line inputs have independently programmable volume controls and mutes. Active and passive filters for the two channels prevent high frequencies from folding back into the audio band.

The line-input gain is logarithmically adjustable from 12 dB to –34.5 dB in 1.5-dB steps. The ADC full-scale range is 1.0 $V_{RMS}$ at $AV_{DD}$ = 3.3 V. The full-scale range tracks linearly with analog supply voltage $AV_{DD}$. To avoid distortions, it is important not to exceed the full-scale range.

The gain is independently programmable on both left and right line-inputs. To reduce the number of software write cycles required. Both channels can be locked to the same value by setting the RLS and LRS bits (see Section 3.1.3).

The line inputs are biased internally to VMID. When the line inputs are muted or the device is set to standby mode, the line inputs are kept biased to VMID using special antithump circuitry. This reduces audible clicks that otherwise might be heard when reactivating the inputs.

For interfacing to a CD system, the line input should be scaled to 1 $V_{RMS}$ to avoid clipping, using the circuit shown in Figure 3-3.

**Where:**

**R1 = 5 kΩ**
**R2 = 5 kΩ**
**C1 = 47 pF**
**C2 = 470 nF**

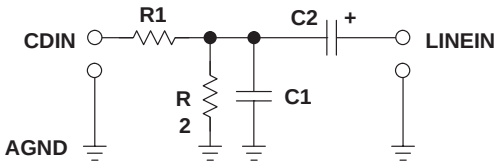


**Figure 3−3. Analog Line Input Circuit**

R1 and R2 divide the input signal by two, reducing the 2 $V_{RMS}$ from the CD player to the nominal 1 $V_{RMS}$ of the AIC23B inputs. C1 filters high-frequency noise, and C2 removes any dc component from the signal.

### 3.2.2 Microphone Input

MICIN is a high-impedance, low-capacitance input that is compatible with a wide range of microphones. It has a programmable volume control and a mute function. Active and passive filters prevent high frequencies from folding back into the audio band.

The MICIN signal path has two gain stages. The first stage has a nominal gain of G1 = 50 k/10 k = 5. By adding an external resistor ($R_{MIC}$) in series with MICIN, the gain of the first stage can be adjusted by G1 = 50 k/(10 k + $R_{MIC}$). For example, $R_{MIC}$ = 40 k gives a gain of 0 dB. The second stage has a software programmable gain of 0 dB or 20 dB (see Section 3.1.3).

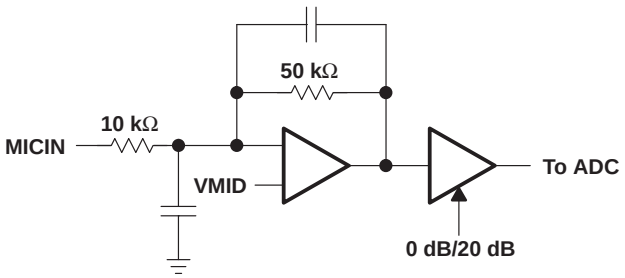


**Figure 3−4. Microphone Input Circuit**

The microphone input is biased internally to VMID. When the line inputs are muted, the MICIN input is kept biased to VMID using special antithump circuitry. This reduces audible clicks that may otherwise be heard when reactivating the input.

The MICBIAS output provides a low-noise reference voltage suitable for biasing electret type microphones and the associated external resistor biasing network. The maximum source current capability is 3 mA. This limits the smallest value of external biasing resistors that safely can be used.

The MICBIAS output is not active in standby mode.

### 3.2.3 Line Outputs

The TLV320AIC23B has two low-impedance line outputs (LLINEOUT and RLINEOUT) capable of driving line loads with 10-kΩ and 50-pF impedances.

The DAC full-scale output voltage is 1.0 $V_{RMS}$ at $AV_{DD}$ = 3.3 V. The full-scale range tracks linearly with the analog supply voltage $AV_{DD}$. The DAC is connected to the line outputs via a low-pass filter that removes out-of-band components. No further external filtering is required in most applications.

The DAC outputs, line inputs, and the microphone signal are summed into the line outputs. These sources can be switched off independently. For example, in bypass mode, the line inputs are routed to the line outputs, bypassing the ADC and the DAC. If sidetone is enabled, the microphone signal is routed to both line outputs via a four-step programmable attenuation circuit.

The line outputs are muted by either muting the DAC (analog) or soft muting (digital) and disabling the bypass and sidetone paths (see Section 3.1.3).

### 3.2.4 Headphone Output

The TLV320AIC23B has stereo headphone outputs (LHPOUT and RHPOUT), and is designed to drive 16-Ω or 32-Ω headphones. The headphone output includes a high-quality volume control and mute function.

The headphone volume is logarithmically adjustable from 6 dB to –73 dB in 1-dB steps. Writing 000000 to the volume-control registers (see Section 3.1.3) mutes the headphone output. When the headphone output is muted or the device is placed in standby mode, the dc voltage is maintained at the outputs to prevent audible clicks.

A zero-cross detection circuit is provided under the control of the LZC and RZC bits. If this circuit is enabled, the volume-control values are updated only when the input signal to the gain stage is close to the analog ground level.

This minimizes audible clicks as the volume is changed or the device is muted. This circuit has no time-out, so, if only dc levels are being applied to the gain stage input of more than 20 mV, the gain is not updated.

The gain is independently programmable on the left and right channels. Both channels can be locked to the same value by setting the RLS and LRS bits (see Section 3.1.3).

### 3.2.5 Analog Bypass Mode

The TLV320AIC23B includes a bypass mode in which the analog line inputs are directly routed to the analog line outputs, bypassing the ADC and DAC. This is enabled by selecting the bypass bit in the analog audio path control register[see Section 3.1.3).

For a true bypass mode, the output from the DAC and the sidetone should be disabled. The line input and headphone output volume controls and mutes are still operational in bypass mode. Therefore the line inputs, DAC output, and microphone input can be summed together. The maximum signal at any point in the bypass path must be no greater than $1.0V_{rms}$ at $AV_{DD}$=3.3V to avoid clipping and distortion. This amplitude tracks linearly with $AV_{DD}$.

### 3.2.6 Sidetone Insertion

The TLV320AIC23B has a sidetone insertion made where the microphone input is routed to the line and headphone outputs. This is useful for telephony and headset applications. The attenuation of the sidetone signal may be set to −6 dB, −9 dB, −12 dB, −15 dB, or 0dB, by software selection (see Section 3.1.3). If this mode is used to sum the microphone input with the DAC output and line inputs, care must be taken not to exceed signal level to avoid clipping and distortion.

## 3.3 Digital Audio Interface

### 3.3.1 Digital Audio-Interface Modes

The TLV320AIC23B supports four audio-interface modes.

- Right justified
- Left justified
- $I^2S$ mode
- DSP mode

The four modes are MSB first and operate with a variable word width between 16 to 32 bits (except right-justified mode, which does not support 32 bits).

The digital audio interface consists of clock signal BCLK, data signals DIN and DOUT, and synchronization signals LRCIN and LRCOUT. BCLK is an output in master mode and an input in slave mode.

#### 3.3.1.1 Right-Justified Mode

In right-justified mode, the LSB is available on the rising edge of BCLK, preceding a falling edge on LRCIN or LRCOUT (see Figure 3-5).

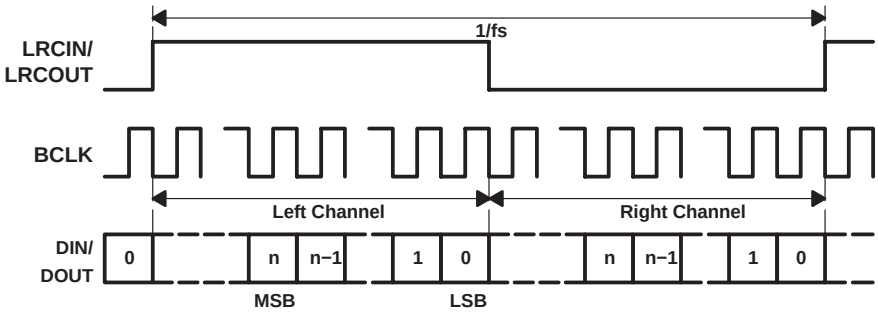


**Figure 3−5. Right-Justified Mode Timing**

#### 3.3.1.2 Left-Justified Mode

In left-justified mode, the MSB is available on the rising edge of BCLK, following a rising edge on LRCIN or LRCOUT (see Figure 3-6)

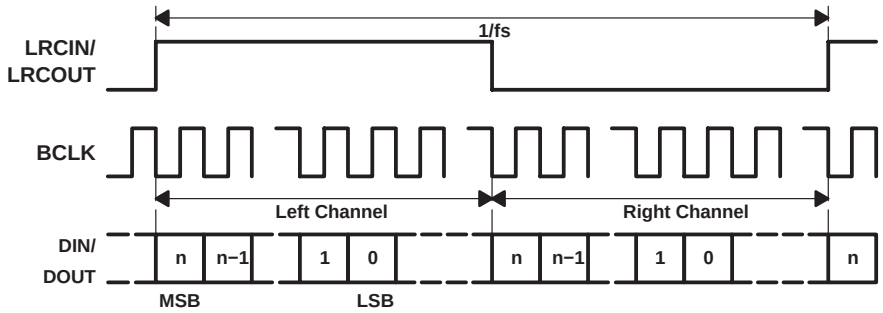


**Figure 3−6. Left-Justified Mode Timing**

### 3.3.1.3 I$^2$S Mode

In I$^2$S mode, the MSB is available on the second rising edge of BCLK, after the falling edge on LRCIN or LRCOUT (see Figure 3-7).

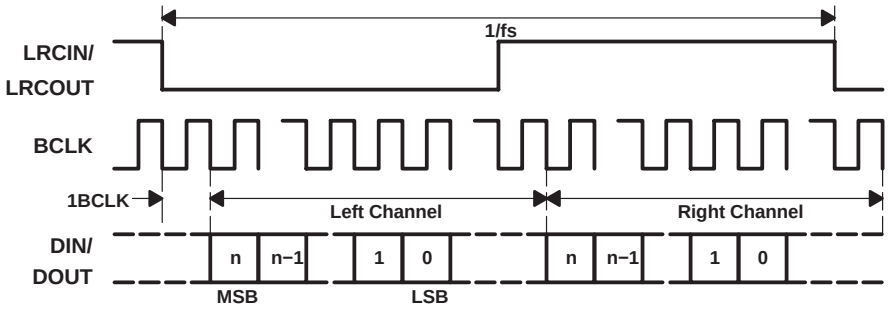


**Figure 3−7. I$^2$S Mode Timing**

### 3.3.1.4 DSP Mode

The DSP mode is compatible with the McBSP ports of TI DSPs. LRCIN and LRCOUT must be connected to the Frame Sync signal of the McBSP. A falling edge on LRCIN or LRCOUT starts the data transfer. The left-channel data consists of the first data word, which is immediately followed by the right channel data word (see Figure 3-8). Input word length is defined by the IWL register. Figure 3−8 shows LRP = 1 (default LRP = 0).

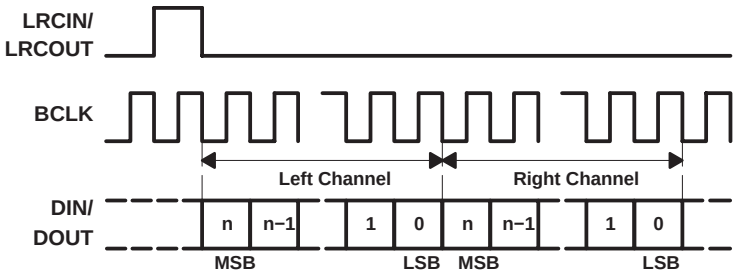


**Figure 3−8. DSP Mode Timing**

### 3.3.2 Audio Sampling Rates

The TLV320AIC23B can operate in master or slave clock mode. In the master mode, the TLV320AIC23B clock and sampling rates are derived from a 12-MHz MCLK signal. This 12-MHz clock signal is compatible with the USB specification. The TLV320AIC23B can be used directly in a USB system.

In the slave mode, an appropriate MCLK or crystal frequency and the sample rate control register settings control the TLV320AIC23B clock and sampling rates.

The settings in the sample rate control register control the clock mode and sampling rates.

Sample Rate Control (Address: 0001000)

| BIT | D8 | D7 | D6 | D5 | D4 | D3 | D2 | D1 | D0 |
|---|---|---|---|---|---|---|---|---|---|
| Function | X | CLKOUT | CLKIN | SR3 | SR2 | SR1 | SR0 | BOSR | USB/Normal |
| Default | 0 | 0 | 0 | 1 | 0 | 0 | 0 | 0 | 0 |

| | | | |
|---|---|---|---|
| CLKOUT | Clock output divider | 0 = MCLK | 1 = MCLK/2 |
| CLKIN | Clock input divider | 0 = MCLK | 1 = MCLK/2 |
| SR[3:0] | Sampling rate control (see Sections 3.3.2.1 and 3.3.2.2) | | |
| BOSR | Base oversampling rate | | |
| | USB mode: | 0 = 250 $f_S$ | 1 = 272 $f_S$ |
| | Normal mode: | 0 = 256 $f_S$ | 1 = 384 $f_S$ |
| USB/Normal | Clock mode select: | 0 = Normal | 1 = USB |
| X | Reserved | | |

The clock circuit of the AIC23B has two internal dividers. The first, controlled by CLKIN, applies to the sampling-rate generator of the codec. The second, controlled by CLKOUT, applies only to the CLKOUT terminal. By setting CLKIN to 1, the entire codec is clocked with half the frequency, effectively dividing the resulting sampling rates by two. The following sampling-rate tables are based on CLKIN = MCLK.

#### 3.3.2.1 USB-Mode Sampling Rates (MCLK = 12 MHz)

In the USB mode, the following ADC and DAC sampling rates are available:

| SAMPLING RATE† | | FILTER TYPE | SAMPLING-RATE CONTROL SETTINGS | | | | |
|---|---|---|---|---|---|---|---|
| ADC (kHz) | DAC (kHz) | | SR3 | SR2 | SR1 | SR0 | BOSR |
| 96 | 96 | 3 | 0 | 1 | 1 | 1 | 0 |
| 88.2 | 88.2 | 2 | 1 | 1 | 1 | 1 | 1 |
| 48 | 48 | 0 | 0 | 0 | 0 | 0 | 0 |
| 44.1 | 44.1 | 1 | 1 | 0 | 0 | 0 | 1 |
| 32 | 32 | 0 | 0 | 1 | 1 | 0 | 0 |
| 8.021 | 8.021 | 1 | 1 | 0 | 1 | 1 | 1 |
| 8 | 8 | 0 | 0 | 0 | 1 | 1 | 0 |
| 48 | 8 | 0 | 0 | 0 | 0 | 1 | 0 |
| 44.1 | 8.021 | 1 | 1 | 0 | 0 | 1 | 1 |
| 8 | 48 | 0 | 0 | 0 | 1 | 0 | 0 |
| 8.021 | 44.1 | 1 | 1 | 0 | 1 | 0 | 1 |

† The sampling rates are derived from the 12-MHz master clock. The available oversampling rates do not produce exactly 8-kHz, 44.1-kHz, and 88.2-kHz sampling rates, but 8.021 kHz, 44.117 kHz, and 88.235 kHz, respectively. See Figures 3−17 through 3−34 for filter responses

### 3.3.2.2 Normal-Mode Sampling Rates

In normal mode, the following ADC and DAC sampling rates, depending on the MCLK frequency, are available:

**MCLK = 12.288 MHz**

| SAMPLING RATE | | FILTER TYPE | SAMPLING-RATE CONTROL SETTINGS | | | | |
|---|---|---|---|---|---|---|---|
| ADC (kHz) | DAC (kHz) | | SR3 | SR2 | SR1 | SR0 | BOSR |
| 96 | 96 | 2 | 0 | 1 | 1 | 1 | 0 |
| 48 | 48 | 1 | 0 | 0 | 0 | 0 | 0 |
| 32 | 32 | 1 | 0 | 1 | 1 | 0 | 0 |
| 8 | 8 | 1 | 0 | 0 | 1 | 1 | 0 |
| 48 | 8 | 1 | 0 | 0 | 0 | 1 | 0 |
| 8 | 48 | 1 | 0 | 0 | 1 | 0 | 0 |

**MCLK = 11.2896 MHz**

| SAMPLING RATE | | FILTER TYPE | SAMPLING-RATE CONTROL SETTINGS | | | | |
|---|---|---|---|---|---|---|---|
| ADC (kHz) | DAC (kHz) | | SR3 | SR2 | SR1 | SR0 | BOSR |
| 88.2 | 88.2 | 2 | 1 | 1 | 1 | 1 | 0 |
| 44.1 | 44.1 | 1 | 1 | 0 | 0 | 0 | 0 |
| 8.021 | 8.021 | 1 | 1 | 0 | 1 | 1 | 0 |
| 44.1 | 8.021 | 1 | 1 | 0 | 0 | 1 | 0 |
| 8.021 | 44.1 | 1 | 1 | 0 | 1 | 0 | 0 |

**MCLK = 18.432 MHz**

| SAMPLING RATE | | FILTER TYPE | SAMPLING-RATE CONTROL SETTINGS | | | | |
|---|---|---|---|---|---|---|---|
| ADC (kHz) | DAC (kHz) | | SR3 | SR2 | SR1 | SR0 | BOSR |
| 96 | 96 | 2 | 0 | 1 | 1 | 1 | 1 |
| 48 | 48 | 1 | 0 | 0 | 0 | 0 | 1 |
| 32 | 32 | 1 | 0 | 1 | 1 | 0 | 1 |
| 8 | 8 | 1 | 0 | 0 | 1 | 1 | 1 |
| 48 | 8 | 1 | 0 | 0 | 0 | 1 | 1 |
| 8 | 48 | 1 | 0 | 0 | 1 | 0 | 1 |

**MCLK = 16.9344 MHz**

| SAMPLING RATE | | FILTER TYPE | SAMPLING-RATE CONTROL SETTINGS | | | | |
|---|---|---|---|---|---|---|---|
| ADC (kHz) | DAC (kHz) | | SR3 | SR2 | SR1 | SR0 | BOSR |
| 88.2 | 88.2 | 2 | 1 | 1 | 1 | 1 | 1 |
| 44.1 | 44.1 | 1 | 1 | 0 | 0 | 0 | 1 |
| 8.021 | 8.021 | 1 | 1 | 0 | 1 | 1 | 1 |
| 44.1 | 8.021 | 1 | 1 | 0 | 0 | 1 | 1 |
| 8.021 | 44.1 | 1 | 1 | 0 | 1 | 0 | 1 |

### 3.3.3 Digital Filter Characteristics

| PARAMETER | TEST CONDITIONS | MIN | TYP | MAX | UNIT |
|---|---|---|---|---|---|
| **ADC Filter Characteristics ( TI DSP 250 $f_S$ Mode Operation )** | | | | | |
| Passband | ±0.05 dB | 0.416 $f_S$ | | | Hz |
| Stopband | −6 dB | | 0.5 $f_S$ | | Hz |
| Passband ripple | | | | ±0.05 | dB |
| Stopband attenuation | f > 0.584 $f_S$ | | −60 | | dB |
| **ADC Filter Characteristics ( TI DSP 272 $f_S$ and Normal Mode Operation )** | | | | | |
| Passband | ±0.05 dB | 0.4535 $f_S$ | | | Hz |
| Stopband | −6 dB | | 0.5 $f_S$ | | Hz |
| Passband ripple | | | | ±0.05 | dB |
| Stopband attenuation | f > 0.5465 $f_S$ | | −60 | | dB |
| **ADC High-Pass Filter Characteristics** | | | | | |
| Corner frequency | −3 dB, $f_S$ = 44.1 kHz | | 3.7 | | Hz |
| | −3 dB, $f_S$ = 48 kHz | | 4.0 | | Hz |
| | −0.5 dB, $f_S$ = 44.1 kHz | | 10.4 | | Hz |
| | −0.5 dB, $f_S$ = 48 kHz | | 11.3 | | Hz |
| | −0.1 dB $f_S$ = 44.1 kHz | | 21.6 | | Hz |
| | −0.1 dB, $f_S$ = 48 kHz | | 23.5 | | Hz |
| **DAC Filter Characteristics (48-kHz Sampling Rate)** | | | | | |
| Passband | ±0.03 dB | 0.416 $f_S$ | | | Hz |
| Stopband | −6 dB | | 0.5 $f_S$ | | Hz |
| Passband ripple | | | | ±0.03 | dB |
| Stopband attenuation | f > 0.584 $f_S$ | | −50 | | dB |
| **DAC Filter Characteristics (44.1-kHz Sampling Rate)** | | | | | |
| Passband | ±0.03 dB | 0.4535 $f_S$ | | | Hz |
| Stopband | −6 dB | | 0.5 fs | | Hz |
| Passband ripple | | | | ±0.03 | dB |
| Stopband attenuation | f > 0.5465 $f_S$ | | −50 | | dB |

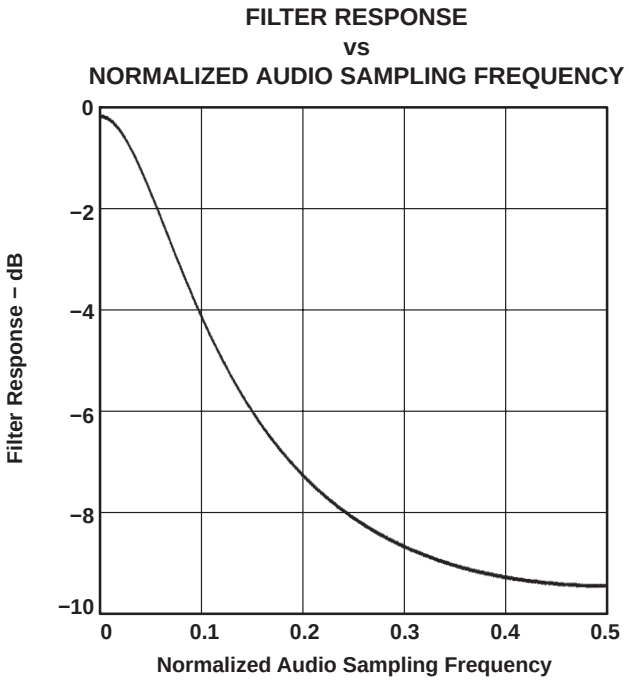


**Figure 3−9. Digital De-Emphasis Filter Response − 44.1 kHz Sampling**

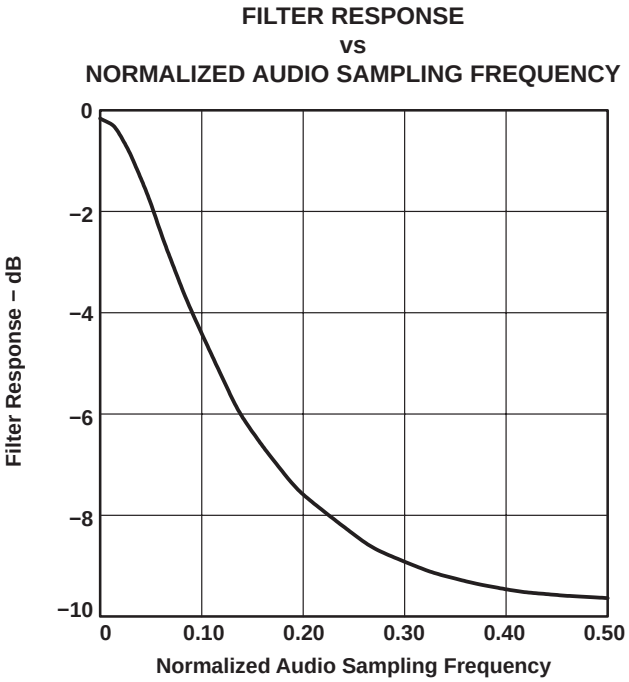


**Figure 3−10. Digital De-Emphasis Filter Response − 48 kHz Sampling**

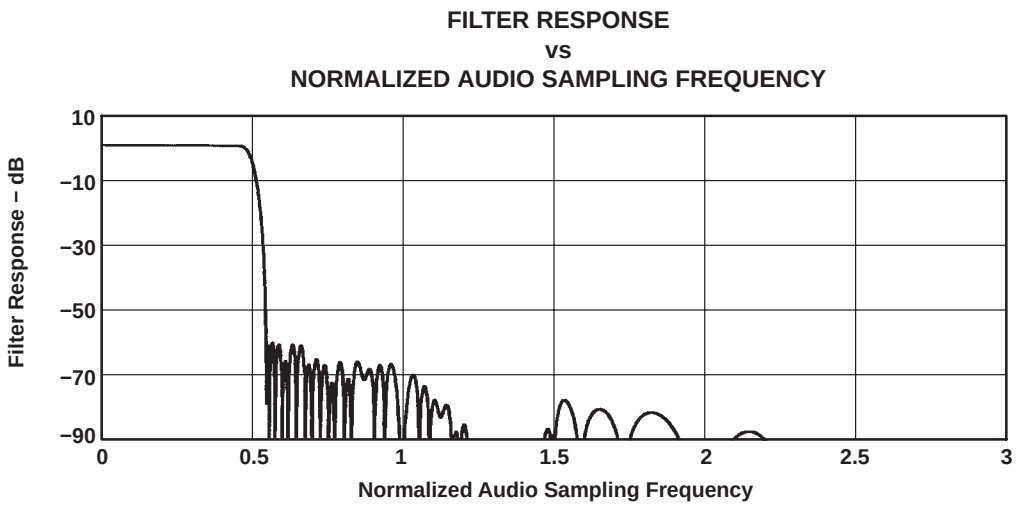


**Figure 3−11. ADC Digital Filter Response 0: USB Mode (Group Delay = 12 Output Samples)**

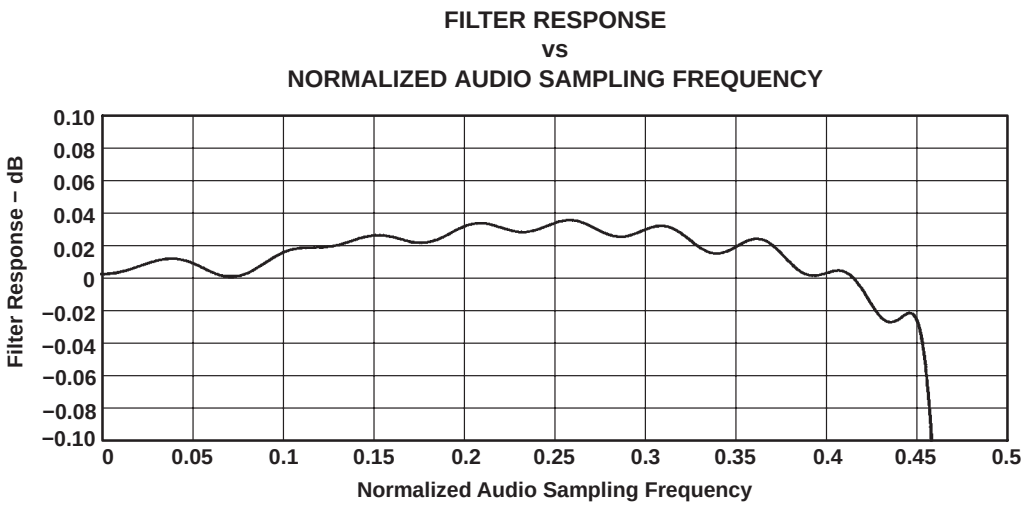


**Figure 3−12. ADC Digital Filter Ripple 0: USB (Group Delay = 20 Output Samples)**

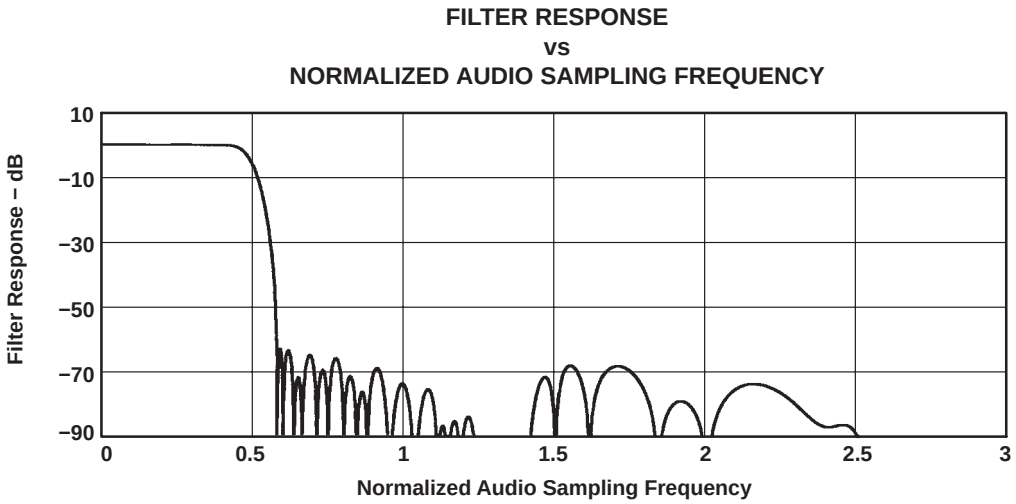


**Figure 3−13. ADC Digital Filter Response 1: USB Mode Only**

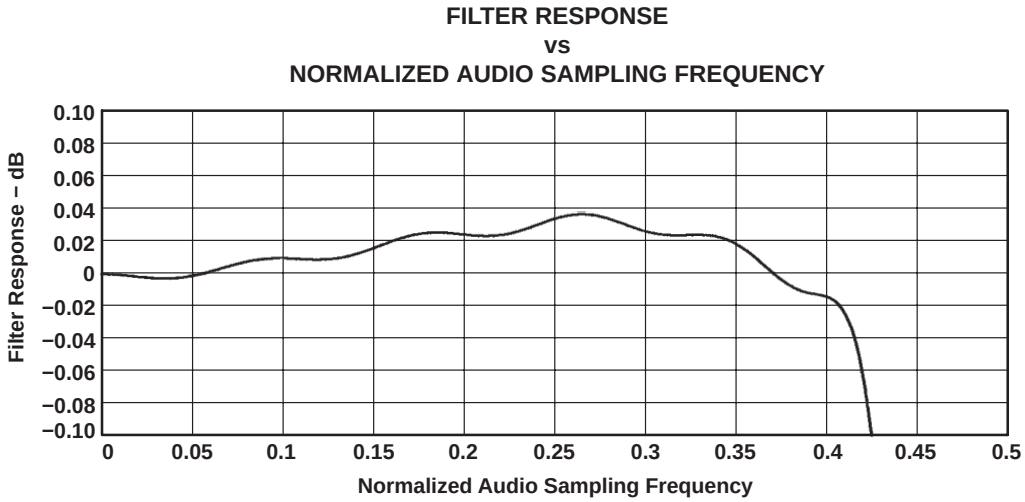


**Figure 3−14. ADC Digital Filter Ripple 1: USB Mode Only**

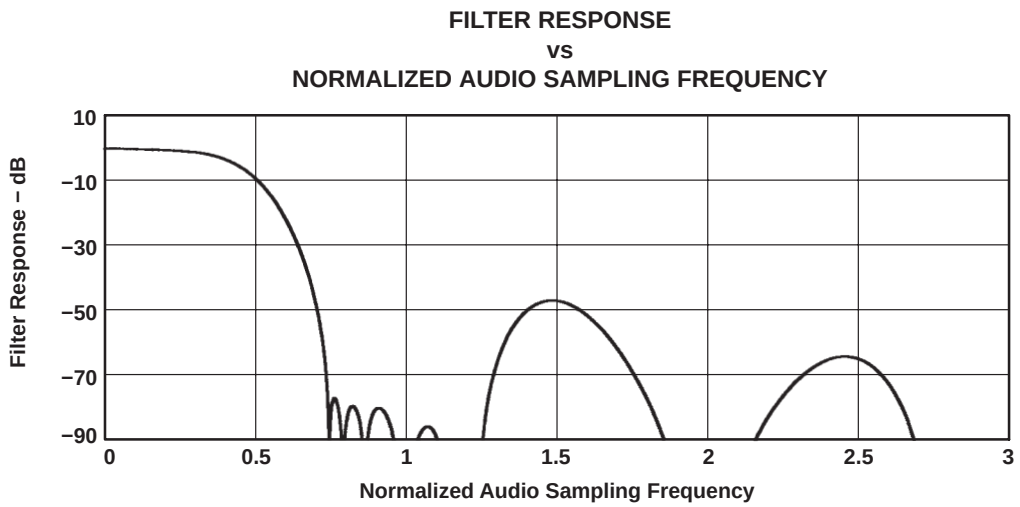


**Figure 3−15. ADC Digital Filter Response 2: USB mode and Normal Modes (Group Delay = 3 Output Samples)**

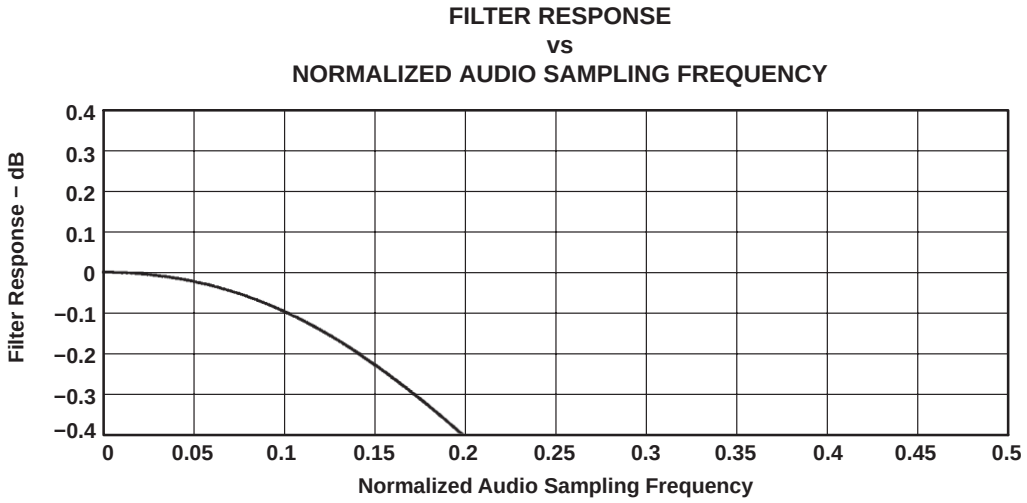


**Figure 3−16. ADC Digital Filter Ripple 2: USB Mode and Normal Modes**

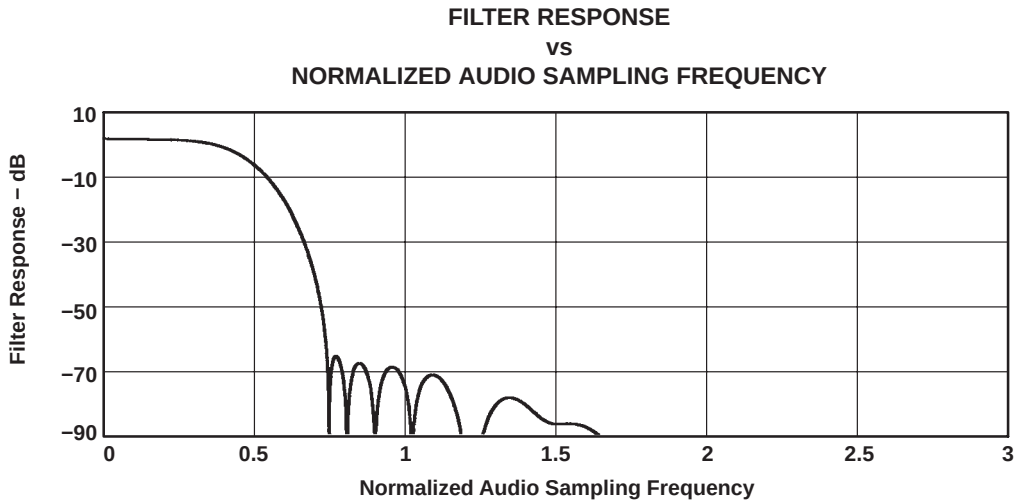


**Figure 3−17. ADC Digital Filter Response 3: USB Mode Only**

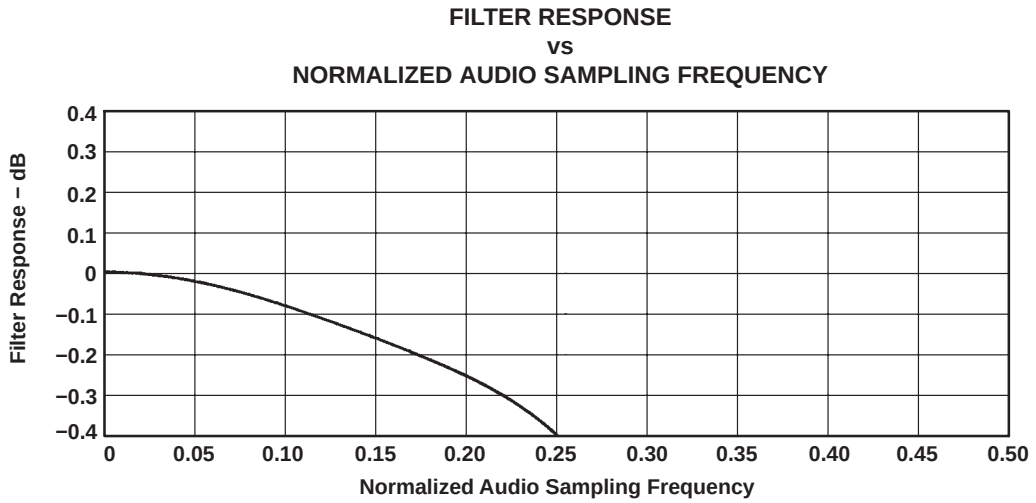


**Figure 3−18. ADC Digital Filter Ripple 3: USB Mode Only**

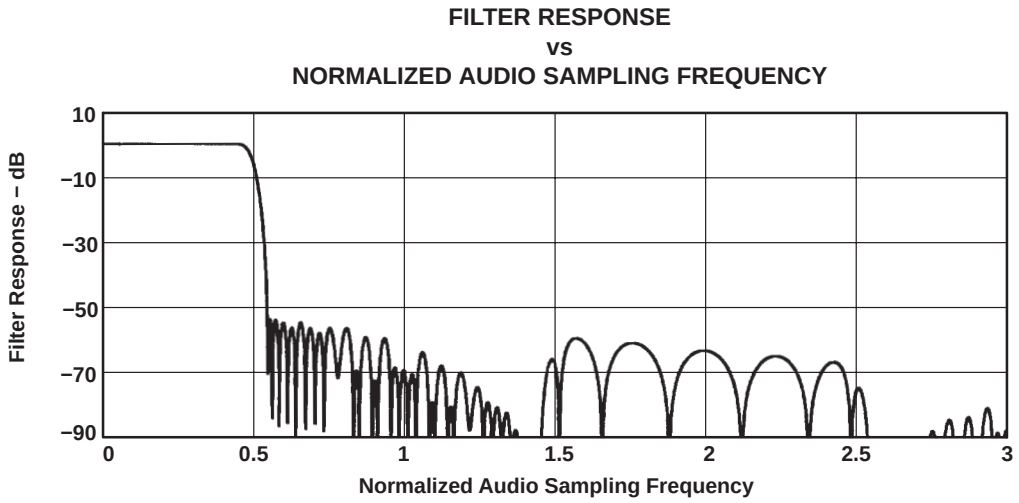


**Figure 3−19. DAC Digital Filter Response 0: USB Mode**

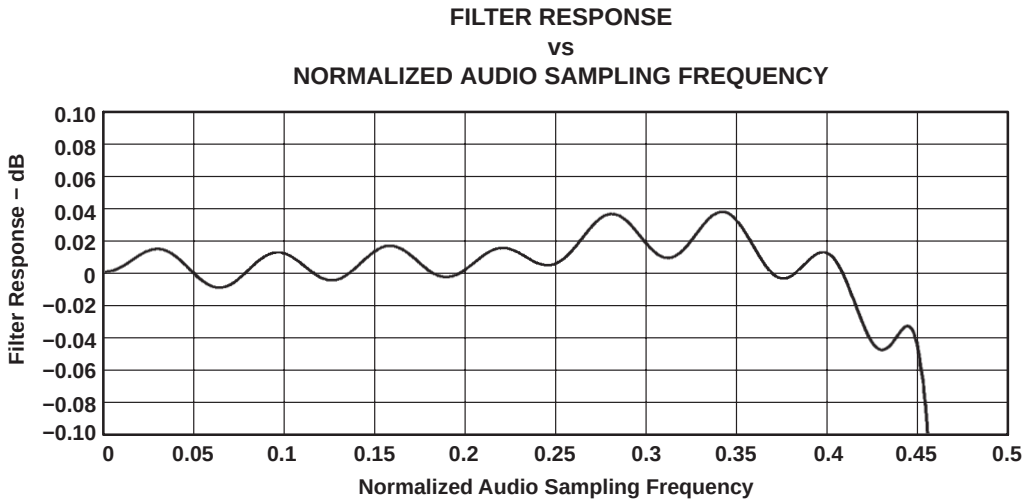


**Figure 3−20. DAC Digital Filter Ripple 0: USB Mode**

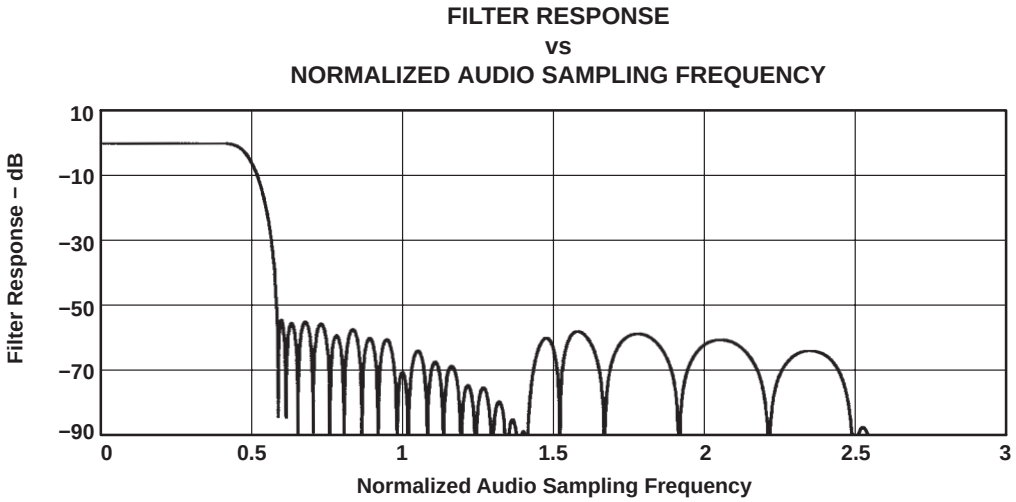


**Figure 3−21. DAC Digital Filter Response 1: USB Mode Only**

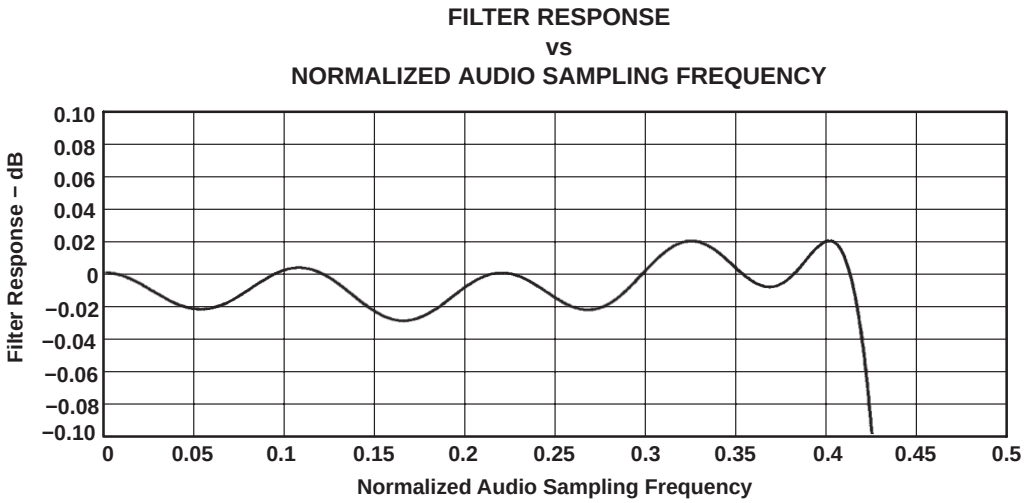


**Figure 3−22. DAC Digital Filter Ripple 1: USB Mode Only**

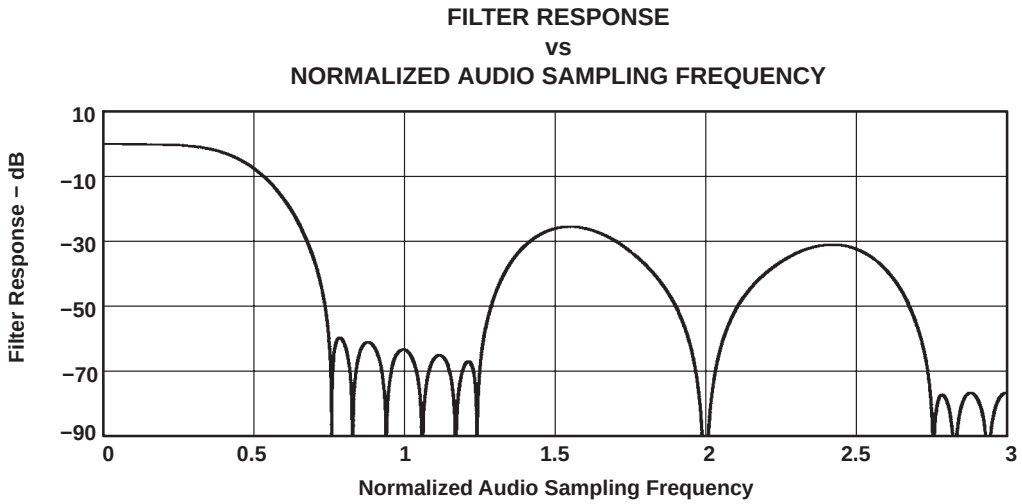


**Figure 3−23. DAC Digital Filter Response 2: USB Mode and Normal Modes**

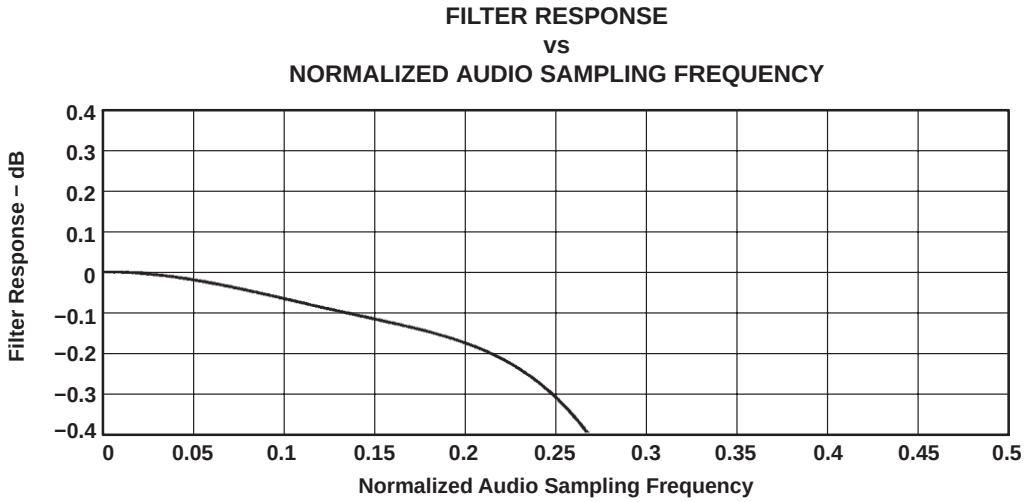


**Figure 3−24. DAC Digital Filter Ripple 2: USB Mode and Normal Modes**

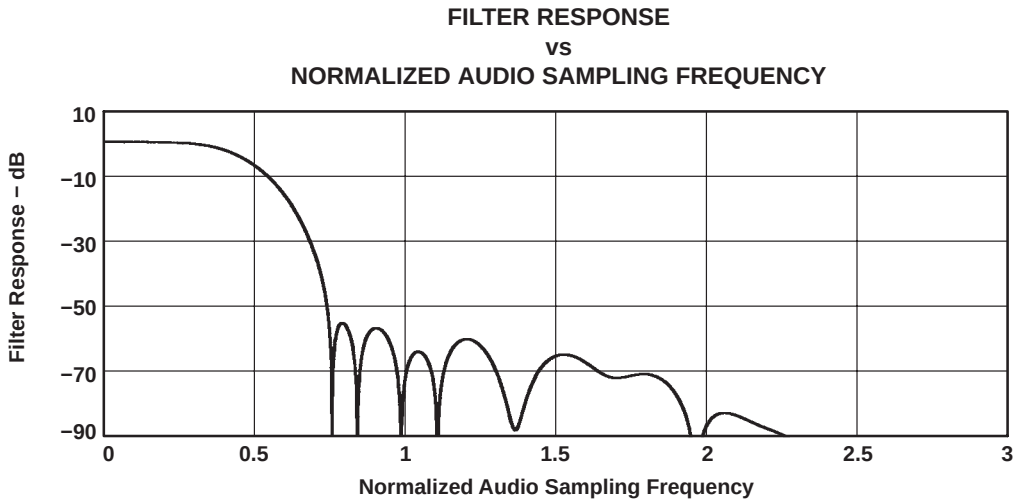


**Figure 3−25. DAC Digital Filter Response 3: USB Mode Only**

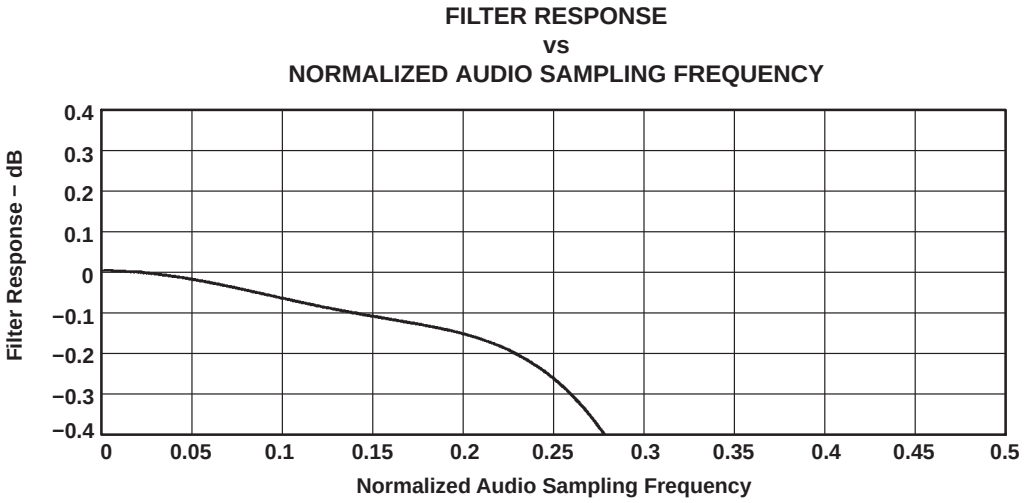


**Figure 3−26. DAC Digital Filter Ripple 3: USB Mode Only**

The delay between the converter is a function of the sample rate. The group delays for the AIC23B are shown in the following table. Each delay is one LR clock (1/sample rate).

**Table 3−1. Group Dealys**

| FILTER | GROUP DELAY |
|---|---|
| DAC type 0 | 11 |
| DAC type 1 | 18 |
| DAC type 2 | 5 |
| DAC type 3 | 5 |
| ADC type 0 | 12 |
| ADC type 1 | 20 |
| ADC type 2 | 3 |
| ADC type 3 | 6 |

# Appendix A
# Mechanical Data

## GQE/ZQE (S-PBGA-N80) PLASTIC BALL GRID ARRAY

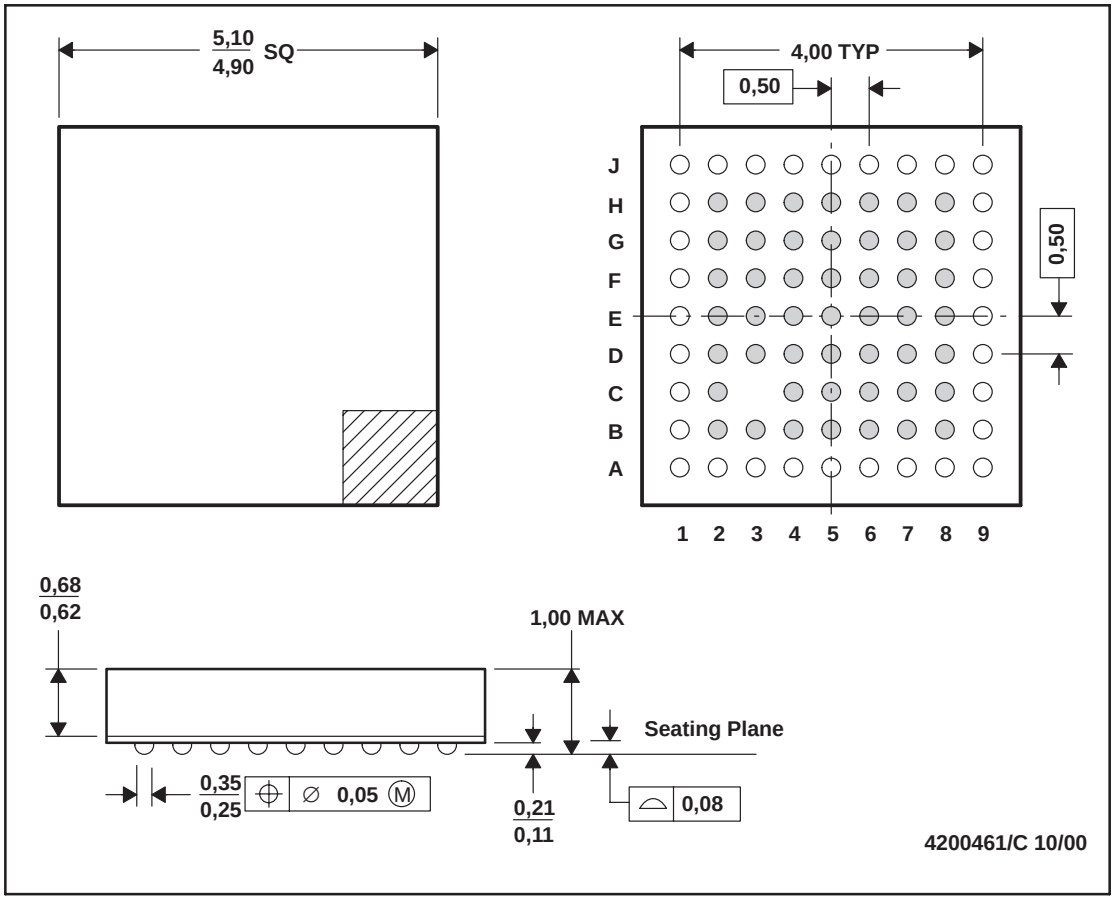


NOTES: A. All linear dimensions are in millimeters.
B. This drawing is subject to change without notice.
C. MicroStar Junior™ BGA configuration
D. Falls within JEDEC MO-225

MicroStar Junior is a trademark of Texas Instruments.

14 PINS SHOWN

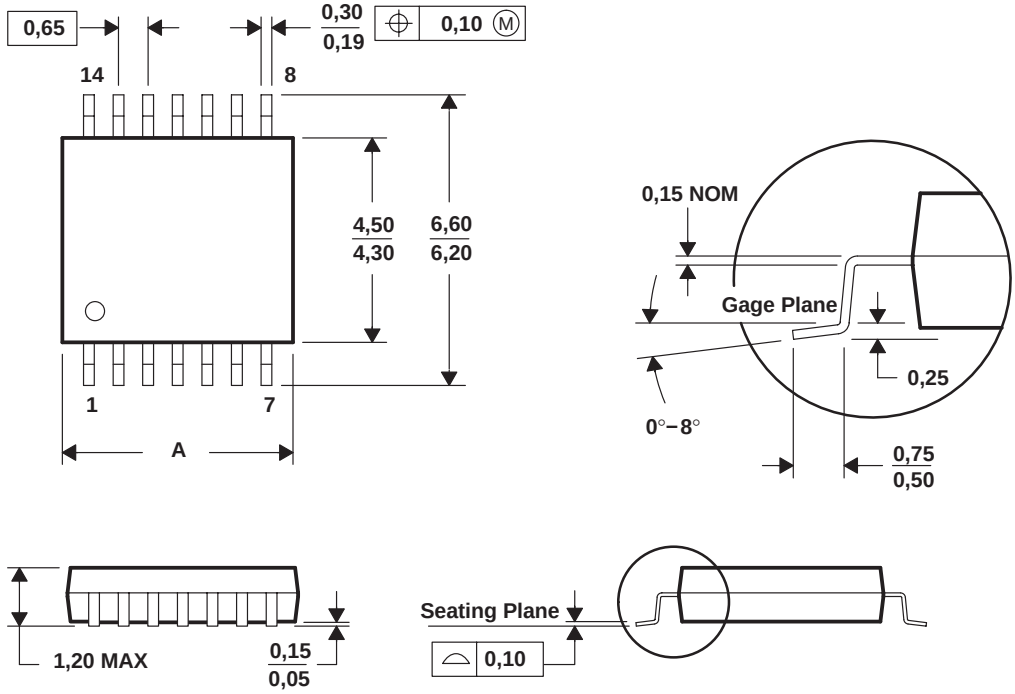


| DIM \ PINS ** | 8 | 14 | 16 | 20 | 24 | 28 |
|---|---|---|---|---|---|---|
| A MAX | 3,10 | 5,10 | 5,10 | 6,60 | 7,90 | 9,80 |
| A MIN | 2,90 | 4,90 | 4,90 | 6,40 | 7,70 | 9,60 |

4040064/F 01/97

NOTES: A. All linear dimensions are in millimeters.
B. This drawing is subject to change without notice.
C. Body dimensions do not include mold flash or protrusion not to exceed 0,15.
D. Falls within JEDEC MO-153

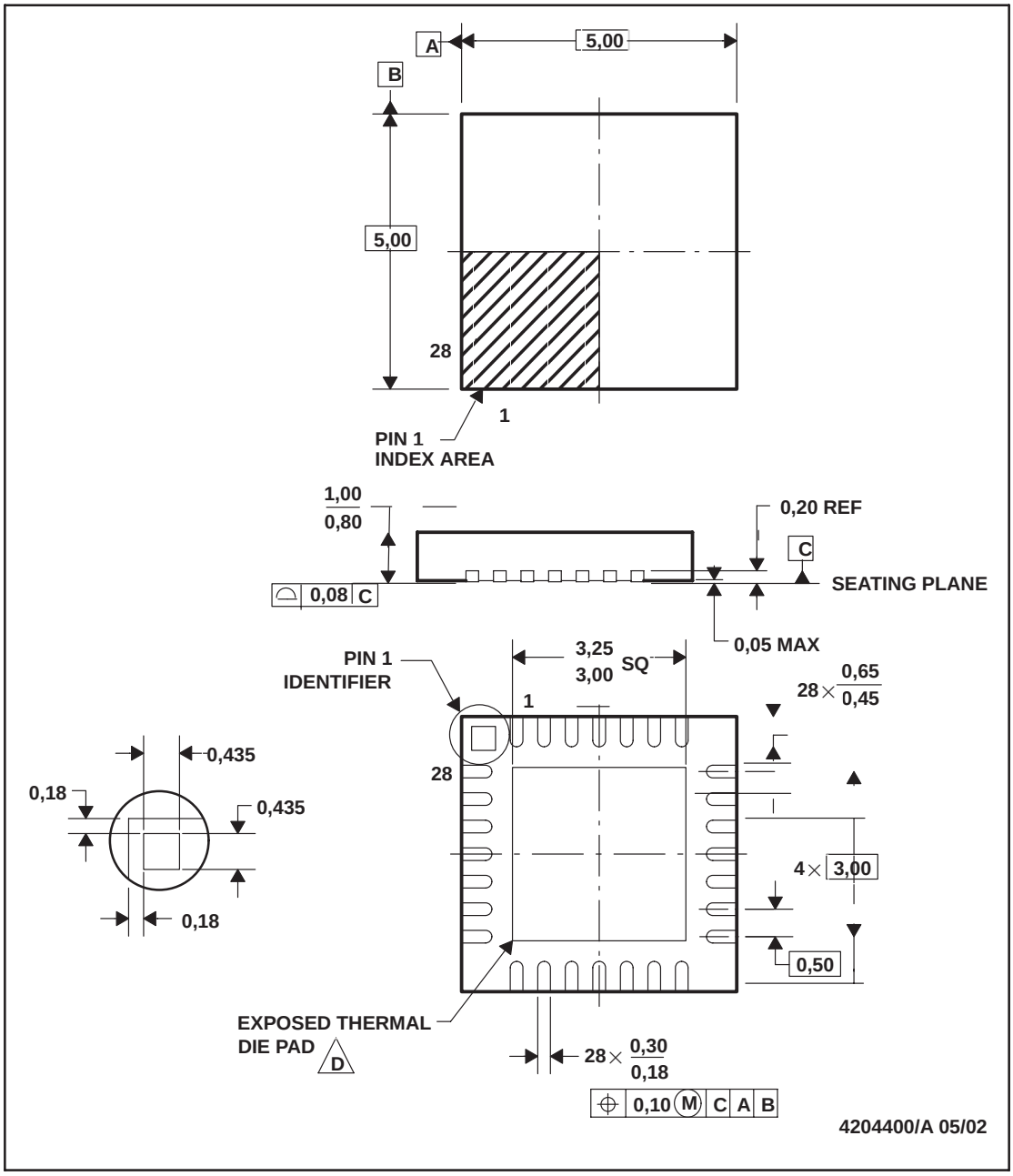


NOTES:
A. All linear dimensions are in millimeters.
B. This drawing is subject to change without notice.
C. QFN (Quad Flatpack No−Lead) Package configuration.
D. The Package thermal performance may be enhanced by bonding the thermal die pad to an external thermal plane. This pad is electrically and thermally connected to the backside of the die and possibly selected ground leads.
E. Package complies to JEDEC MO-220.

## PACKAGING INFORMATION

| Orderable Device | Status (1) | Package Type | Package Drawing | Pins | Package Qty | Eco Plan (2) | Lead/Ball Finish (6) | MSL Peak Temp (3) | Op Temp (°C) | Device Marking (4/5) | Samples |
|---|---|---|---|---|---|---|---|---|---|---|---|
| TLV320AIC23BGQE | ACTIVE | BGA MICROSTAR JUNIOR | GQE | 80 | 360 | TBD | SNPB | Level-2A-235C-4 WKS | -10 to 70 | AIC23BG | Samples |
| TLV320AIC23BIPW | ACTIVE | TSSOP | PW | 28 | 50 | Green (RoHS & no Sb/Br) | CU NIPDAU | Level-1-260C-UNLIM | -40 to 85 | AIC23BI | Samples |
| TLV320AIC23BIPWG4 | ACTIVE | TSSOP | PW | 28 | 50 | Green (RoHS & no Sb/Br) | CU NIPDAU | Level-1-260C-UNLIM | -40 to 85 | AIC23BI | Samples |
| TLV320AIC23BIPWR | ACTIVE | TSSOP | PW | 28 | 2000 | Green (RoHS & no Sb/Br) | CU NIPDAU | Level-1-260C-UNLIM | -40 to 85 | AIC23BI | Samples |
| TLV320AIC23BIPWRG4 | ACTIVE | TSSOP | PW | 28 | 2000 | Green (RoHS & no Sb/Br) | CU NIPDAU | Level-1-260C-UNLIM | -40 to 85 | AIC23BI | Samples |
| TLV320AIC23BIRHD | ACTIVE | VQFN | RHD | 28 | 73 | Green (RoHS & no Sb/Br) | CU NIPDAU | Level-2-260C-1 YEAR | -40 to 85 | AIC23BI | Samples |
| TLV320AIC23BIRHDG4 | ACTIVE | VQFN | RHD | 28 | 73 | Green (RoHS & no Sb/Br) | CU NIPDAU | Level-2-260C-1 YEAR | -40 to 85 | AIC23BI | Samples |
| TLV320AIC23BIRHDR | ACTIVE | VQFN | RHD | 28 | 3000 | Green (RoHS & no Sb/Br) | CU NIPDAU | Level-2-260C-1 YEAR | -40 to 85 | AIC23BI | Samples |
| TLV320AIC23BPW | ACTIVE | TSSOP | PW | 28 | 50 | Green (RoHS & no Sb/Br) | CU NIPDAU | Level-1-260C-UNLIM | -10 to 70 | AIC23B | Samples |
| TLV320AIC23BPWG4 | ACTIVE | TSSOP | PW | 28 | 50 | Green (RoHS & no Sb/Br) | CU NIPDAU | Level-1-260C-UNLIM | -10 to 70 | AIC23B | Samples |
| TLV320AIC23BPWR | ACTIVE | TSSOP | PW | 28 | 2000 | Green (RoHS & no Sb/Br) | CU NIPDAU | Level-1-260C-UNLIM | -10 to 70 | AIC23B | Samples |
| TLV320AIC23BRHD | ACTIVE | VQFN | RHD | 28 | 73 | Green (RoHS & no Sb/Br) | CU NIPDAU | Level-2-260C-1 YEAR | -10 to 70 | AIC23B | Samples |
| TLV320AIC23BRHDR | ACTIVE | VQFN | RHD | 28 | 3000 | Green (RoHS & no Sb/Br) | CU NIPDAU | Level-2-260C-1 YEAR | -10 to 70 | AIC23B | Samples |
| TLV320AIC23BZQE | ACTIVE | BGA MICROSTAR JUNIOR | ZQE | 80 | 360 | Green (RoHS & no Sb/Br) | SNAGCU | Level-3-260C-168 HR | -10 to 70 | AIC23BZ | Samples |
| TLV320AIC23BZQER | ACTIVE | BGA MICROSTAR JUNIOR | ZQE | 80 | 2500 | Green (RoHS & no Sb/Br) | SNAGCU | Level-3-260C-168 HR | -10 to 70 | AIC23BZ | Samples |

(1) The marketing status values are defined as follows:

**ACTIVE:** Product device recommended for new designs.
**LIFEBUY:** TI has announced that the device will be discontinued, and a lifetime-buy period is in effect.
**NRND:** Not recommended for new designs. Device is in production to support existing customers, but TI does not recommend using this part in a new design.
**PREVIEW:** Device has been announced but is not in production. Samples may or may not be available.
**OBSOLETE:** TI has discontinued the production of the device.

(2) **RoHS:** TI defines "RoHS" to mean semiconductor products that are compliant with the current EU RoHS requirements for all 10 RoHS substances, including the requirement that RoHS substance do not exceed 0.1% by weight in homogeneous materials. Where designed to be soldered at high temperatures, "RoHS" products are suitable for use in specified lead-free processes. TI may reference these types of products as "Pb-Free".
**RoHS Exempt:** TI defines "RoHS Exempt" to mean products that contain lead but are compliant with EU RoHS pursuant to a specific EU RoHS exemption.
**Green:** TI defines "Green" to mean the content of Chlorine (Cl) and Bromine (Br) based flame retardants meet JS709B low halogen requirements of <=1000ppm threshold. Antimony trioxide based flame retardants must also meet the <=1000ppm threshold requirement.

(3) MSL, Peak Temp. - The Moisture Sensitivity Level rating according to the JEDEC industry standard classifications, and peak solder temperature.

(4) There may be additional marking, which relates to the logo, the lot trace code information, or the environmental category on the device.

(5) Multiple Device Markings will be inside parentheses. Only one Device Marking contained in parentheses and separated by a "~" will appear on a device. If a line is indented then it is a continuation of the previous line and the two combined represent the entire Device Marking for that device.

(6) Lead/Ball Finish - Orderable Devices may have multiple material finish options. Finish options are separated by a vertical ruled line. Lead/Ball Finish values may wrap to two lines if the finish value exceeds the maximum column width.

**Important Information and Disclaimer:**The information provided on this page represents TI's knowledge and belief as of the date that it is provided. TI bases its knowledge and belief on information provided by third parties, and makes no representation or warranty as to the accuracy of such information. Efforts are underway to better integrate information from third parties. TI has taken and continues to take reasonable steps to provide representative and accurate information but may not have conducted destructive testing or chemical analysis on incoming materials and chemicals. TI and TI suppliers consider certain information to be proprietary, and thus CAS numbers and other limited information may not be available for release.

In no event shall TI's liability arising out of such information exceed the total purchase price of the TI part(s) at issue in this document sold by TI to Customer on an annual basis.

**OTHER QUALIFIED VERSIONS OF TLV320AIC23B :**

- Automotive: TLV320AIC23B-Q1

NOTE: Qualified Version Definitions:

- Automotive - Q100 devices qualified for high-reliability automotive applications targeting zero defects

## TAPE AND REEL INFORMATION

**REEL DIMENSIONS**

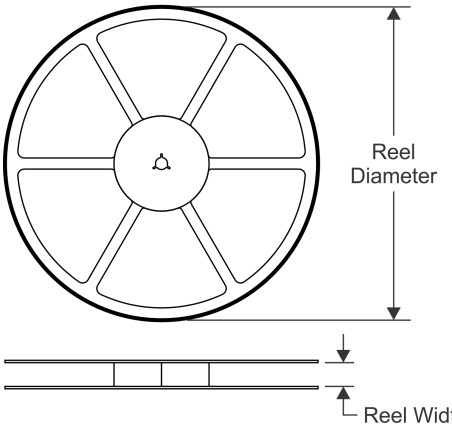


**TAPE DIMENSIONS**

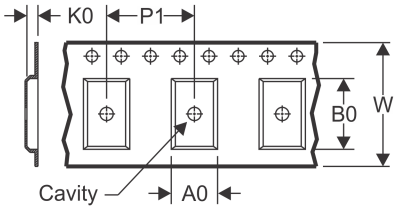


| | |
|---|---|
| A0 | Dimension designed to accommodate the component width |
| B0 | Dimension designed to accommodate the component length |
| K0 | Dimension designed to accommodate the component thickness |
| W | Overall width of the carrier tape |
| P1 | Pitch between successive cavity centers |

**QUADRANT ASSIGNMENTS FOR PIN 1 ORIENTATION IN TAPE**

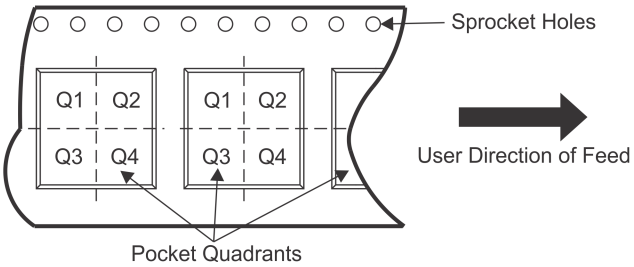


*All dimensions are nominal

| Device | Package Type | Package Drawing | Pins | SPQ | Reel Diameter (mm) | Reel Width W1 (mm) | A0 (mm) | B0 (mm) | K0 (mm) | P1 (mm) | W (mm) | Pin1 Quadrant |
|---|---|---|---|---|---|---|---|---|---|---|---|---|
| TLV320AIC23BIPWR | TSSOP | PW | 28 | 2000 | 330.0 | 16.4 | 6.9 | 10.2 | 1.8 | 12.0 | 16.0 | Q1 |
| TLV320AIC23BIRHDR | VQFN | RHD | 28 | 3000 | 330.0 | 12.4 | 5.3 | 5.3 | 1.5 | 8.0 | 12.0 | Q2 |
| TLV320AIC23BPWR | TSSOP | PW | 28 | 2000 | 330.0 | 16.4 | 6.9 | 10.2 | 1.8 | 12.0 | 16.0 | Q1 |
| TLV320AIC23BRHDR | VQFN | RHD | 28 | 3000 | 330.0 | 12.4 | 5.3 | 5.3 | 1.5 | 8.0 | 12.0 | Q2 |
| TLV320AIC23BZQER | BGA MICROSTAR JUNIOR | ZQE | 80 | 2500 | 330.0 | 12.4 | 5.3 | 5.3 | 1.5 | 8.0 | 12.0 | Q1 |

**TAPE AND REEL BOX DIMENSIONS**

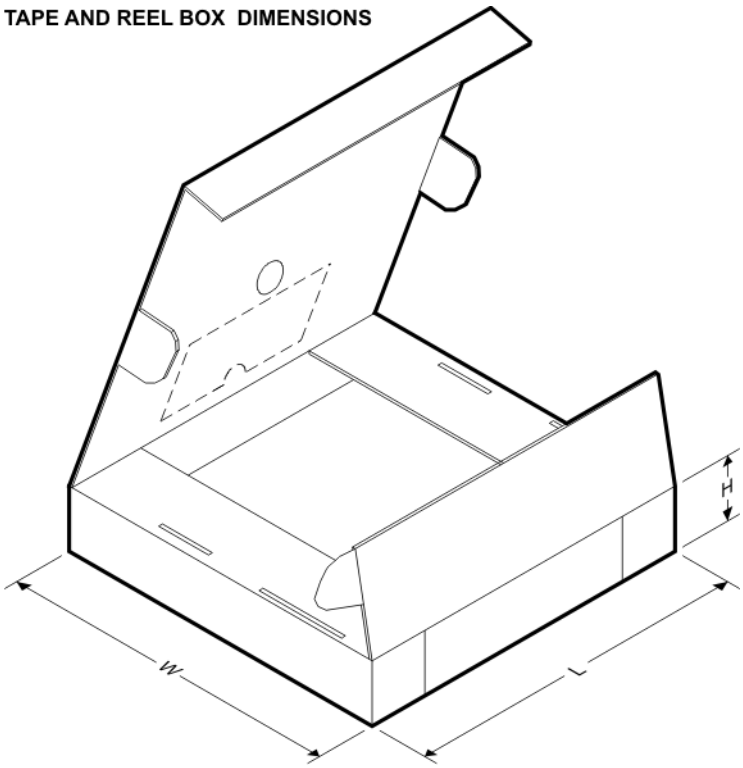


*All dimensions are nominal

| Device | Package Type | Package Drawing | Pins | SPQ | Length (mm) | Width (mm) | Height (mm) |
|---|---|---|---|---|---|---|---|
| TLV320AIC23BIPWR | TSSOP | PW | 28 | 2000 | 350.0 | 350.0 | 43.0 |
| TLV320AIC23BIRHDR | VQFN | RHD | 28 | 3000 | 350.0 | 350.0 | 43.0 |
| TLV320AIC23BPWR | TSSOP | PW | 28 | 2000 | 350.0 | 350.0 | 43.0 |
| TLV320AIC23BRHDR | VQFN | RHD | 28 | 3000 | 350.0 | 350.0 | 43.0 |
| TLV320AIC23BZQER | BGA MICROSTAR JUNIOR | ZQE | 80 | 2500 | 350.0 | 350.0 | 43.0 |

ZQE (S–PBGA–N80) PLASTIC BALL GRID ARRAY

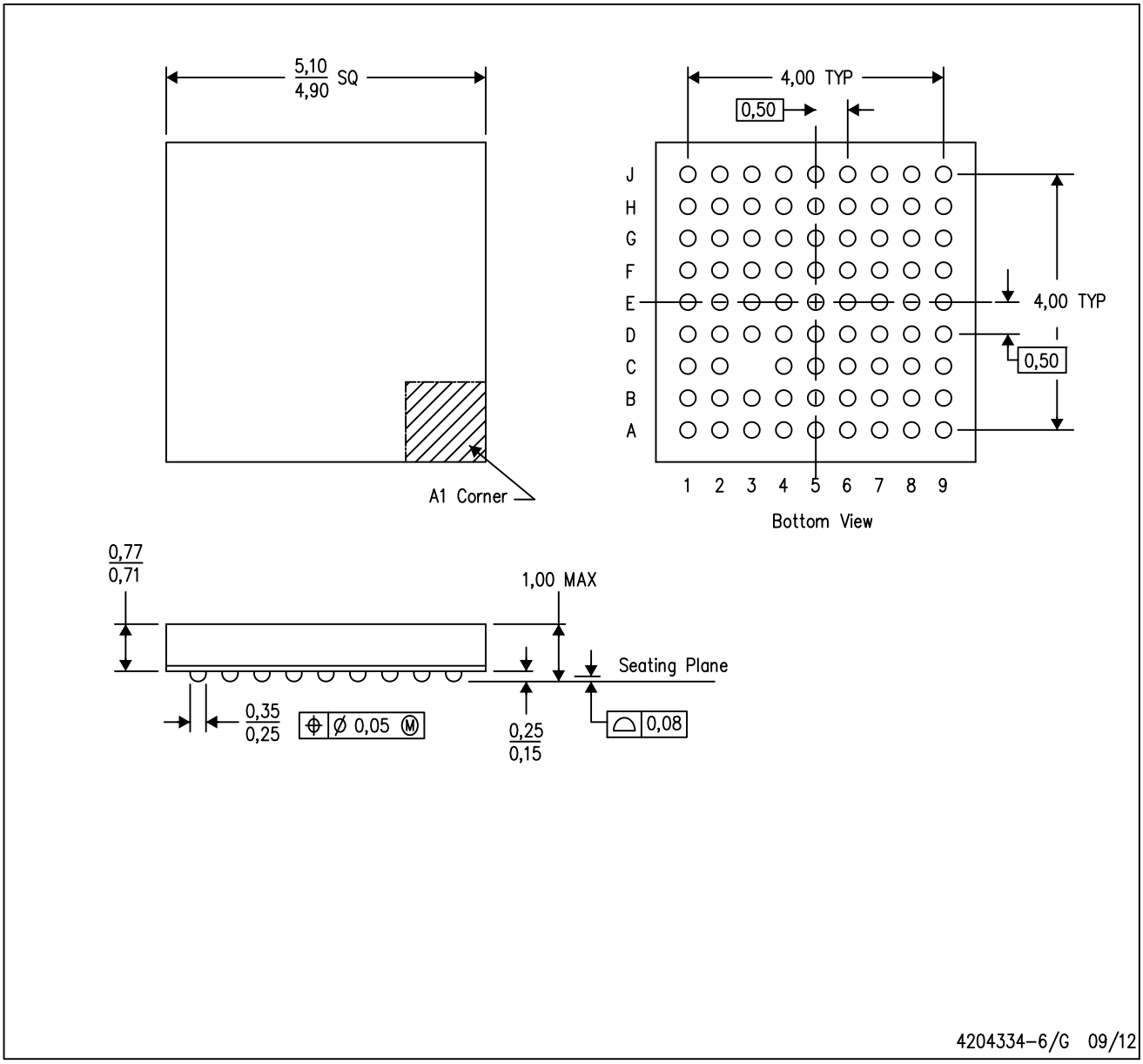


NOTES:
A. All linear dimensions are in millimeters. Dimensioning and tolerancing per ASME Y14.5M–1994.
B. This drawing is subject to change without notice.
C. Falls within JEDEC MO–225
D. This is a Pb–free solder ball design.

MicroStar Junior is a trademark of Texas Instruments.

# GENERIC PACKAGE VIEW

## RHD 28

## VQFN - 1 mm max height

**5 x 5 mm, 0.5 mm pitch**

PLASTIC QUAD FLATPACK - NO LEAD

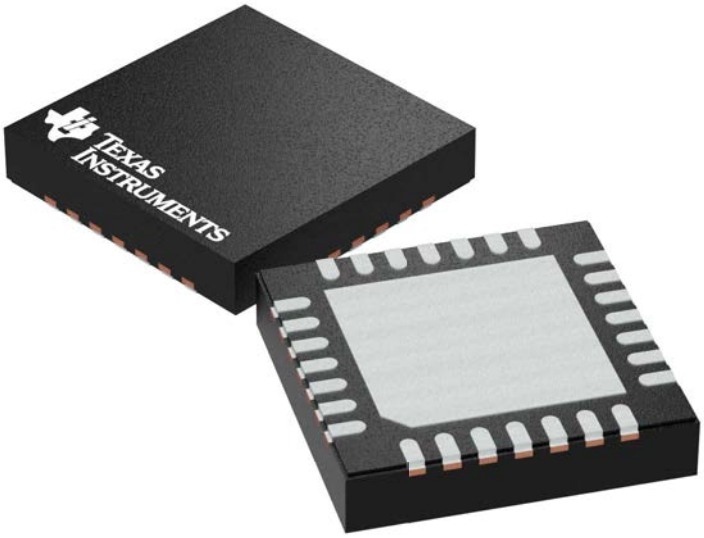


Images above are just a representation of the package family, actual package may vary.
Refer to the product data sheet for package details.

4204400/G

RHD (S–PVQFN–N28) PLASTIC QUAD FLATPACK NO–LEAD

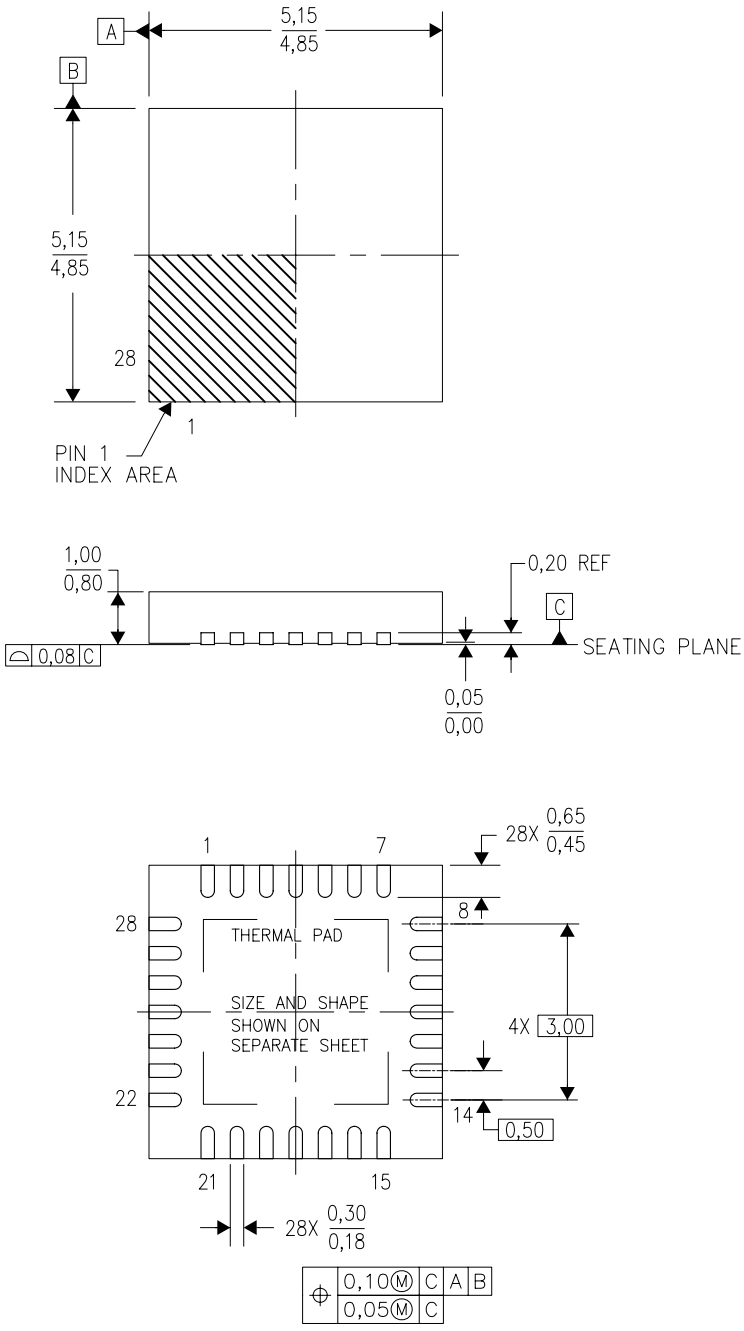


4204400/F 09/11

NOTES:
A. All linear dimensions are in millimeters. Dimensioning and tolerancing per ASME Y14.5M–1994.
B. This drawing is subject to change without notice.
C. QFN (Quad Flatpack No–Lead) Package configuration.
D. The package thermal pad must be soldered to the board for thermal and mechanical performance.
E. See the additional figure in the Product Data Sheet for details regarding the exposed thermal pad features and dimensions.
F. Falls within JEDEC MO–220.

RHD (S–PVQFN–N28) PLASTIC QUAD FLATPACK NO–LEAD

THERMAL INFORMATION

This package incorporates an exposed thermal pad that is designed to be attached directly to an external heatsink. The thermal pad must be soldered directly to the printed circuit board (PCB). After soldering, the PCB can be used as a heatsink. In addition, through the use of thermal vias, the thermal pad can be attached directly to the appropriate copper plane shown in the electrical schematic for the device, or alternatively, can be attached to a special heatsink structure designed into the PCB. This design optimizes the heat transfer from the integrated circuit (IC).

For information on the Quad Flatpack No–Lead (QFN) package and its advantages, refer to Application Report, QFN/SON PCB Attachment, Texas Instruments Literature No. SLUA271. This document is available at www.ti.com.

The exposed thermal pad dimensions for this package are shown in the following illustration.

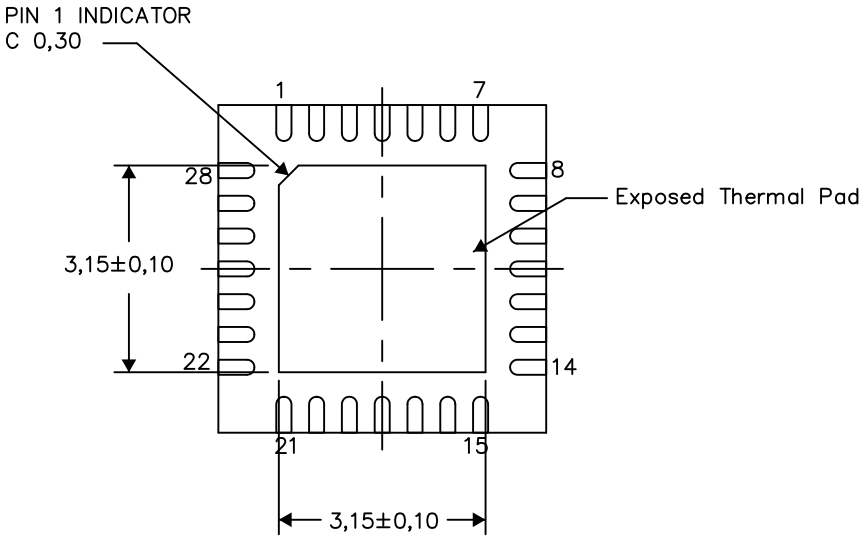


Bottom View

Exposed Thermal Pad Dimensions

4206358–2/L 05/15

NOTE: All linear dimensions are in millimeters

RHD (S–PVQFN–N28) PLASTIC QUAD FLATPACK NO–LEAD

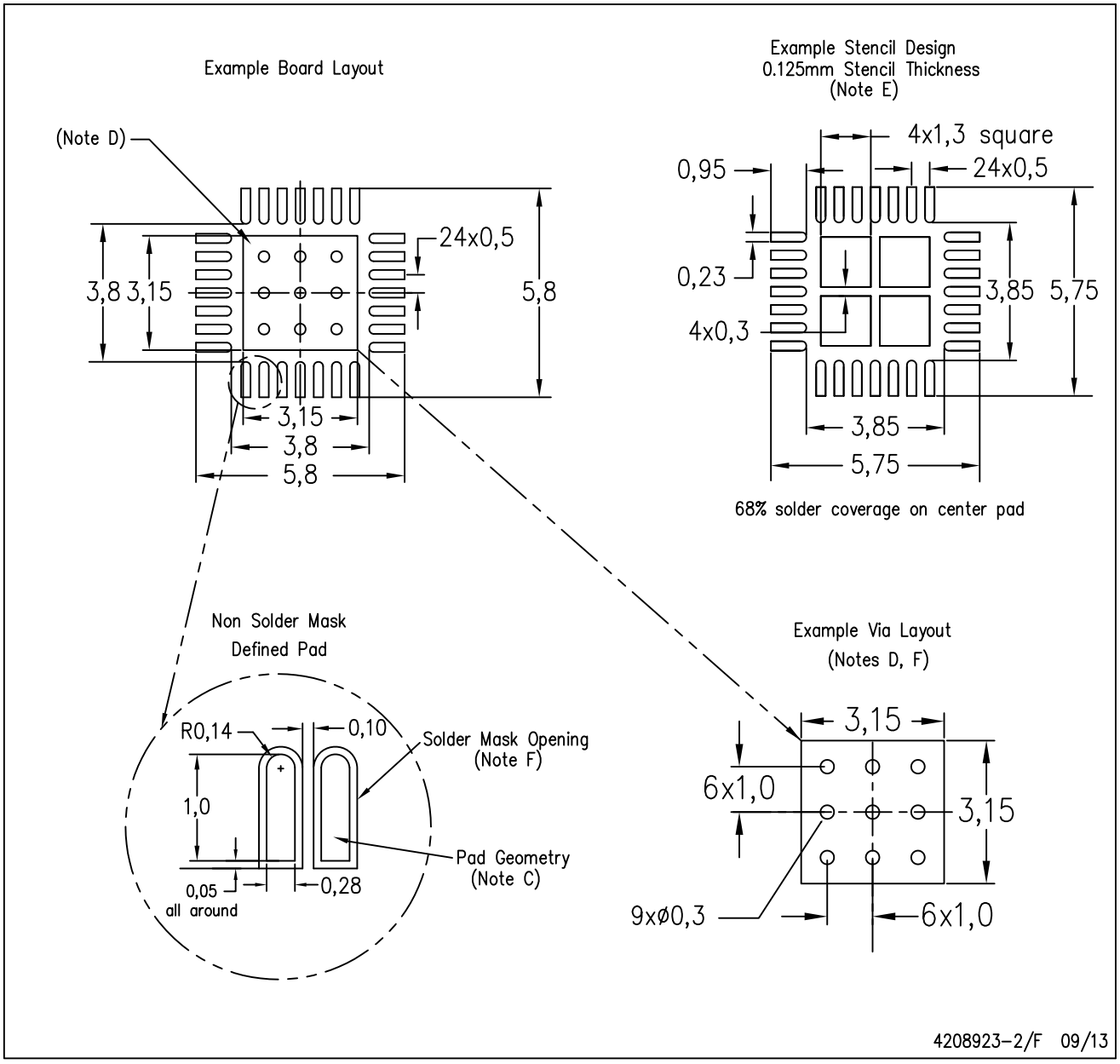


NOTES:
A. All linear dimensions are in millimeters.
B. This drawing is subject to change without notice.
C. Publication IPC–7351 is recommended for alternate designs.
D. This package is designed to be soldered to a thermal pad on the board. Refer to Application Note, Quad Flat–Pack Packages, Texas Instruments Literature No. SLUA271, and also the Product Data Sheets for specific thermal information, via requirements, and recommended board layout. These documents are available at www.ti.com <http://www.ti.com>.
E. Laser cutting apertures with trapezoidal walls and also rounding corners will offer better paste release. Customers should contact their board assembly site for stencil design recommendations. Refer to IPC 7525 for stencil design considerations.
F. Customers should contact their board fabrication site for recommended solder mask tolerances and via tenting recommendations for vias placed in thermal pad.

PW (R-PDSO-G28) PLASTIC SMALL OUTLINE

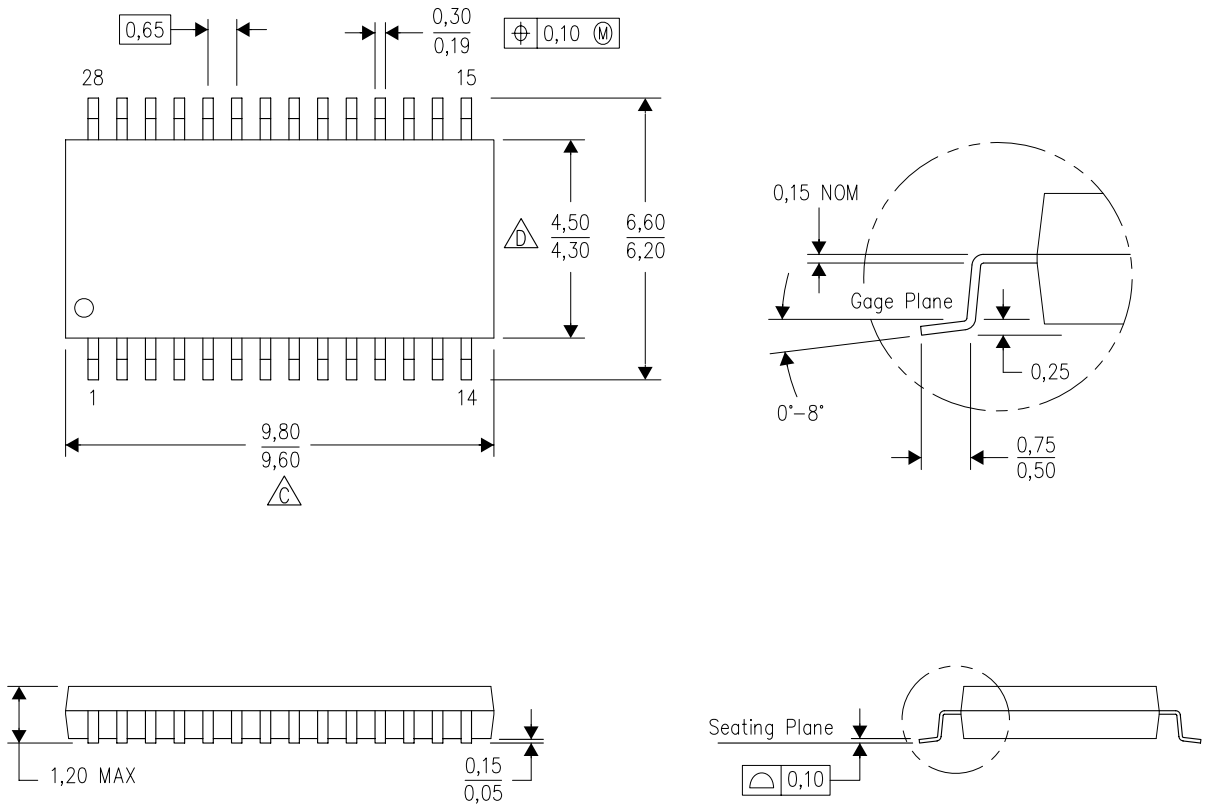


NOTES:
A. All linear dimensions are in millimeters. Dimensioning and tolerancing per ASME Y14.5M–1994.
B. This drawing is subject to change without notice.
C. Body length does not include mold flash, protrusions, or gate burrs. Mold flash, protrusions, or gate burrs shall not exceed 0,15 each side.
D. Body width does not include interlead flash. Interlead flash shall not exceed 0,25 each side.
E. Falls within JEDEC MO-153

PW (R–PDSO–G28) PLASTIC SMALL OUTLINE

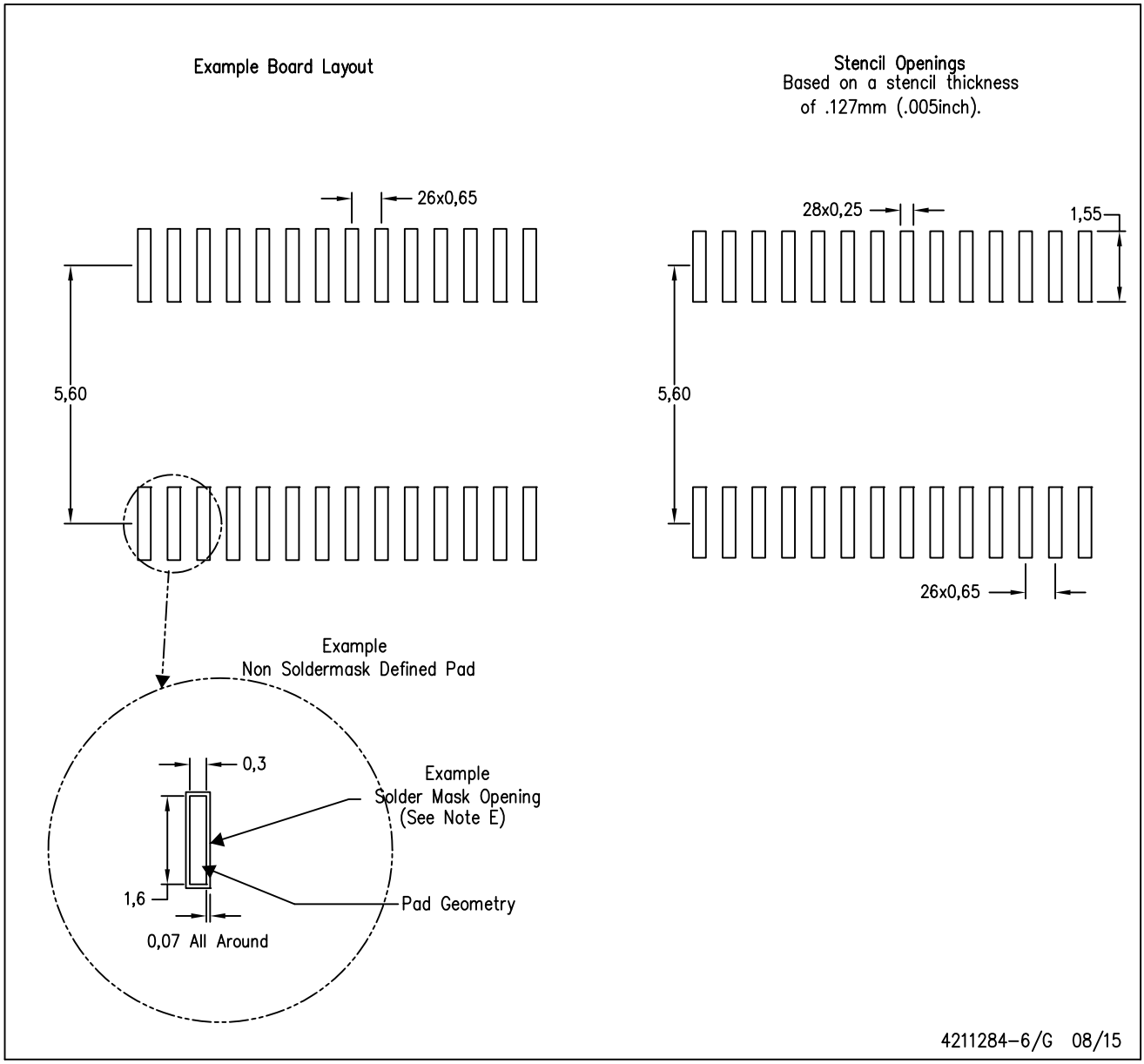


NOTES:
A. All linear dimensions are in millimeters.
B. This drawing is subject to change without notice.
C. Publication IPC–7351 is recommended for alternate design.
D. Laser cutting apertures with trapezoidal walls and also rounding corners will offer better paste release. Customers should contact their board assembly site for stencil design recommendations. Refer to IPC–7525 for other stencil recommendations.
E. Customers should contact their board fabrication site for solder mask tolerances between and around signal pads.

## GQE (S–PBGA–N80) PLASTIC BALL GRID ARRAY

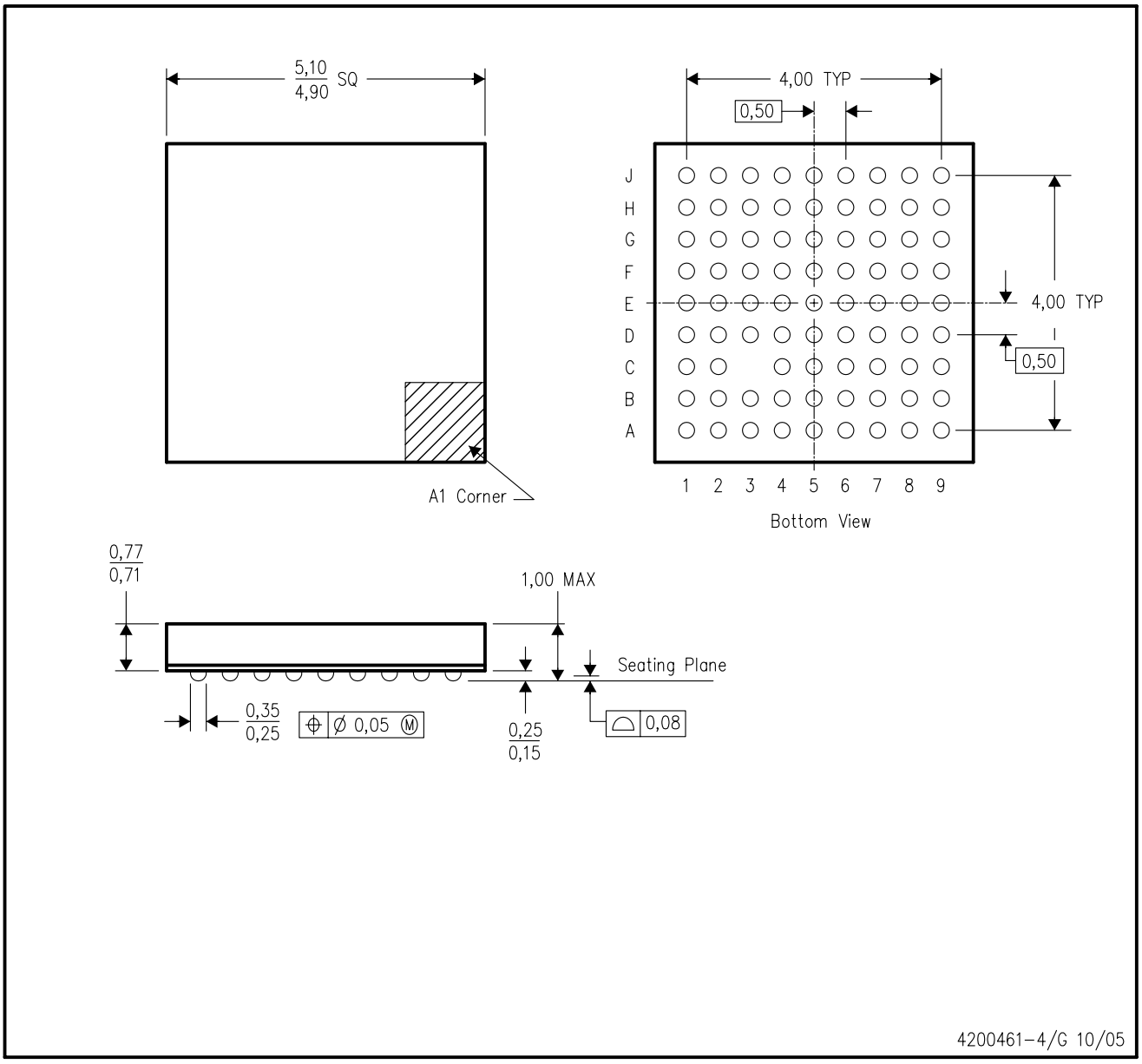


NOTES:
A. All linear dimensions are in millimeters.
B. This drawing is subject to change without notice.
C. Falls within JEDEC MO–225

## IMPORTANT NOTICE AND DISCLAIMER

TI PROVIDES TECHNICAL AND RELIABILITY DATA (INCLUDING DATASHEETS), DESIGN RESOURCES (INCLUDING REFERENCE DESIGNS), APPLICATION OR OTHER DESIGN ADVICE, WEB TOOLS, SAFETY INFORMATION, AND OTHER RESOURCES “AS IS” AND WITH ALL FAULTS, AND DISCLAIMS ALL WARRANTIES, EXPRESS AND IMPLIED, INCLUDING WITHOUT LIMITATION ANY IMPLIED WARRANTIES OF MERCHANTABILITY, FITNESS FOR A PARTICULAR PURPOSE OR NON-INFRINGEMENT OF THIRD PARTY INTELLECTUAL PROPERTY RIGHTS.

These resources are intended for skilled developers designing with TI products. You are solely responsible for (1) selecting the appropriate TI products for your application, (2) designing, validating and testing your application, and (3) ensuring your application meets applicable standards, and any other safety, security, or other requirements. These resources are subject to change without notice. TI grants you permission to use these resources only for development of an application that uses the TI products described in the resource. Other reproduction and display of these resources is prohibited. No license is granted to any other TI intellectual property right or to any third party intellectual property right. TI disclaims responsibility for, and you will fully indemnify TI and its representatives against, any claims, damages, costs, losses, and liabilities arising out of your use of these resources.

TI’s products are provided subject to TI’s Terms of Sale (www.ti.com/legal/termsofsale.html) or other applicable terms available either on ti.com or provided in conjunction with such TI products. TI’s provision of these resources does not expand or otherwise alter TI’s applicable warranties or warranty disclaimers for TI products.

Mailing Address: Texas Instruments, Post Office Box 655303, Dallas, Texas 75265
Copyright © 2019, Texas Instruments Incorporated