- **4.5-V to 5.5-V $V_{CC}$ Operation**
- **Inputs Accept Voltages to 5.5 V**
- **Max $t_{pd}$ of 10 ns at 5 V**
- **Inputs Are TTL-Voltage Compatible**

**SN54ACT373 . . . J OR W PACKAGE**
**SN74ACT373 . . . DB, DW, N, NS, OR PW PACKAGE**
**(TOP VIEW)**

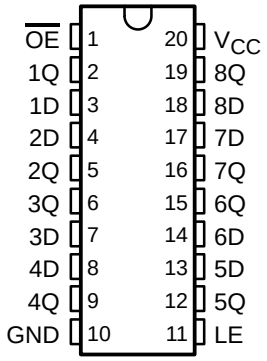


**SN54ACT373 . . . FK PACKAGE**
**(TOP VIEW)**

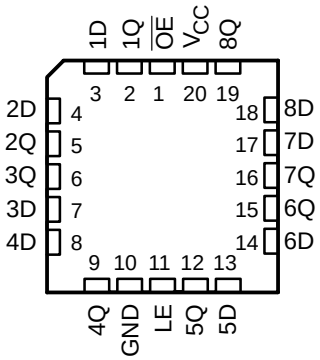


## description/ordering information

These 8-bit latches feature 3-state outputs designed specifically for driving highly capacitive or relatively low-impedance loads. The devices are particularly suitable for implementing buffer registers, I/O ports, bidirectional bus drivers, and working registers.

The eight latches are D-type transparent latches. When the latch-enable (LE) input is high, the Q outputs follow the data (D) inputs. When LE is taken low, the Q outputs are latched at the logic levels set up at the D inputs.

A buffered output-enable ($\overline{OE}$) input can be used to place the eight outputs in either a normal logic state (high or low logic levels) or the high-impedance state. In the high-impedance state, the outputs neither load nor drive the bus lines significantly. The high-impedance state and increased drive provide the capability to drive bus lines in bus-organized systems without need for interface or pullup components.

$\overline{OE}$ does not affect the internal operations of the latches. Old data can be retained or new data can be entered while the outputs are in the high-impedance state.

To ensure the high-impedance state during power up or power down, $\overline{OE}$ should be tied to $V_{CC}$ through a pullup resistor; the minimum value of the resistor is determined by the current-sinking capability of the driver.

**ORDERING INFORMATION**

| $T_A$ | PACKAGE† | | ORDERABLE PART NUMBER | TOP-SIDE MARKING |
|---|---|---|---|---|
| –40°C to 85°C | PDIP – N | Tube | SN74ACT373N | SN74ACT373N |
| | SOIC – DW | Tube | SN74ACT373DW | ACT373 |
| | | Tape and reel | SN74ACT373DWR | |
| | SOP – NS | Tape and reel | SN74ACT373NSR | ACT373 |
| | SSOP – DB | Tape and reel | SN74ACT373DBR | AD373 |
| | TSSOP – PW | Tape and reel | SN74ACT373PWR | AD373 |
| –55°C to 125°C | CDIP – J | Tube | SNJ54ACT373J | SNJ54ACT373J |
| | CFP – W | Tube | SNJ54ACT373W | SNJ54ACT373W |
| | LCCC – FK | Tube | SNJ54ACT373FK | SNJ54ACT373FK |

† Package drawings, standard packing quantities, thermal data, symbolization, and PCB design guidelines are available at www.ti.com/sc/package.

Please be aware that an important notice concerning availability, standard warranty, and use in critical applications of Texas Instruments semiconductor products and disclaimers thereto appears at the end of this data sheet.

PRODUCTION DATA information is current as of publication date. Products conform to specifications per the terms of Texas Instruments standard warranty. Production processing does not necessarily include testing of all parameters.

Copyright © 2002, Texas Instruments Incorporated

On products compliant to MIL-PRF-38535, all parameters are tested unless otherwise noted. On all other products, production processing does not necessarily include testing of all parameters.

**FUNCTION TABLE**
**(each latch)**

| INPUTS | | | OUTPUT Q |
|---|---|---|---|
| $\overline{OE}$ | LE | D | |
| L | H | H | H |
| L | H | L | L |
| L | L | X | $Q_0$ |
| H | X | X | Z |

## logic diagram (positive logic)

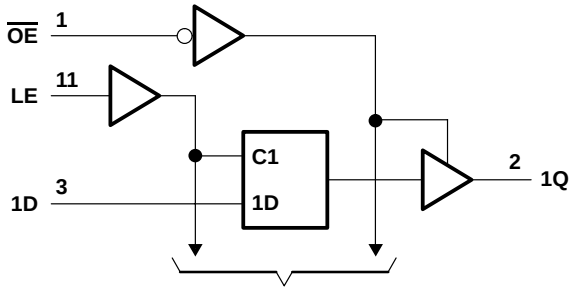


## absolute maximum ratings over operating free-air temperature range (unless otherwise noted)†

Supply voltage range, $V_{CC}$ . . . . . –0.5 V to 7 V
Input voltage range, $V_I$ (see Note 1) . . . . . –0.5 V to $V_{CC}$ + 0.5 V
Output voltage range, $V_O$ (see Note 1) . . . . . –0.5 V to $V_{CC}$ + 0.5 V
Input clamp current, $I_{IK}$ ($V_I$ < 0 or $V_I$ > $V_{CC}$) . . . . . ±20 mA
Output clamp current, $I_{OK}$ ($V_O$ < 0 or $V_O$ > $V_{CC}$) . . . . . ±20 mA
Continuous output current, $I_O$ ($V_O$ = 0 to $V_{CC}$) . . . . . ±50 mA
Continuous current through $V_{CC}$ or GND . . . . . ±200 mA
Package thermal impedance, $\theta_{JA}$ (see Note 2): DB package . . . . . 70°C/W
DW package . . . . . 58°C/W
N package . . . . . 69°C/W
NS package . . . . . 60°C/W
PW package . . . . . 83°C/W
Storage temperature range, $T_{stg}$ . . . . . –65°C to 150°C

† Stresses beyond those listed under “absolute maximum ratings” may cause permanent damage to the device. These are stress ratings only, and functional operation of the device at these or any other conditions beyond those indicated under “recommended operating conditions” is not implied. Exposure to absolute-maximum-rated conditions for extended periods may affect device reliability.

NOTES: 1. The input and output voltage ratings may be exceeded if the input and output current ratings are observed.
2. The package thermal impedance is calculated in accordance with JESD 51-7.

## recommended operating conditions (see Note 3)

| | | SN54ACT373 | | SN74ACT373 | | UNIT |
|---|---|---|---|---|---|---|
| | | MIN | MAX | MIN | MAX | |
| $V_{CC}$ | Supply voltage | 4.5 | 5.5 | 4.5 | 5.5 | V |
| $V_{IH}$ | High-level input voltage | 2 | | 2 | | V |
| $V_{IL}$ | Low-level input voltage | | 0.8 | | 0.8 | V |
| $V_I$ | Input voltage | 0 | $V_{CC}$ | 0 | $V_{CC}$ | V |
| $V_O$ | Output voltage | 0 | $V_{CC}$ | 0 | $V_{CC}$ | V |
| $I_{OH}$ | High-level output current | | –24 | | –24 | mA |
| $I_{OL}$ | Low-level output current | | 24 | | 24 | mA |
| $\Delta t/\Delta v$ | Input transition rise or fall rate | | 8 | | 8 | ns/V |
| $T_A$ | Operating free-air temperature | –55 | 125 | –40 | 85 | °C |

NOTE 3: All unused inputs of the device must be held at $V_{CC}$ or GND to ensure proper device operation. Refer to the TI application report *Implications of Slow or Floating CMOS Inputs*, literature number SCBA004.

## electrical characteristics over recommended operating free-air temperature range (unless otherwise noted)

| PARAMETER | TEST CONDITIONS | $V_{CC}$ | $T_A$ = 25°C | | | SN54ACT373 | | SN74ACT373 | | UNIT |
|---|---|---|---|---|---|---|---|---|---|---|
| | | | MIN | TYP | MAX | MIN | MAX | MIN | MAX | |
| $V_{OH}$ | $I_{OH}$ = –50 µA | 4.5 V | 4.4 | 4.49 | | 4.4 | | 4.4 | | V |
| | | 5.5 V | 5.4 | 5.49 | | 5.4 | | 5.4 | | |
| | $I_{OH}$ = –24 mA | 4.5 V | 3.86 | | | 3.7 | | 3.76 | | |
| | | 5.5 V | 4.86 | | | 4.7 | | 4.76 | | |
| | $I_{OH}$ = –50 mA† | 5.5 V | | | | 3.85 | | | | |
| | $I_{OH}$ = –75 mA† | 5.5 V | | | | | | 3.85 | | |
| $V_{OL}$ | $I_{OL}$ = 50 µA | 4.5 V | | | 0.1 | | 0.1 | | 0.1 | V |
| | | 5.5 V | | | 0.1 | | 0.1 | | 0.1 | |
| | $I_{OL}$ = 24 mA | 4.5 V | | | 0.36 | | 0.44 | | 0.44 | |
| | | 5.5 V | | | 0.36 | | 0.44 | | 0.44 | |
| | $I_{OL}$ = 50 mA† | 5.5 V | | | | | 1.65 | | | |
| | $I_{OL}$ = 75 mA† | 5.5 V | | | | | | | 1.65 | |
| $I_{OZ}$ | $V_O = V_{CC}$ or GND | 5.5 V | | | ±0.25 | | ±5 | | ±2.5 | µA |
| $I_I$ | $V_I = V_{CC}$ or GND | 5.5 V | | | ±0.1 | | ±1 | | ±1 | µA |
| $I_{CC}$ | $V_I = V_{CC}$ or GND, $I_O$ = 0 | 5.5 V | | | 4 | | 80 | | 40 | µA |
| $\Delta I_{CC}$‡ | One input at 3.4 V, Other inputs at GND or $V_{CC}$ | 5.5 V | | 0.6 | | | 1.5 | | 1.5 | mA |
| $C_i$ | $V_I = V_{CC}$ or GND | 5 V | | 4.5 | | | | | | pF |

† Not more than one output should be tested at a time, and the duration of the test should not exceed 2 ms.
‡ This is the increase in supply current for each input that is at one of the specified TTL voltage levels, rather than 0 V or $V_{CC}$.

## timing requirements over recommended operating free-air temperature range, $V_{CC}$ = 5 V ± 0.5 V (unless otherwise noted) (see Figure 1)

| | | $T_A$ = 25°C | | SN54ACT373 | | SN74ACT373 | | UNIT |
|---|---|---|---|---|---|---|---|---|
| | | MIN | MAX | MIN | MAX | MIN | MAX | |
| $t_w$ | Pulse duration, LE high | 7 | | 8.5 | | 8 | | ns |
| $t_{su}$ | Setup time, data before LE↓ | 7 | | 8.5 | | 8 | | ns |
| $t_h$ | Hold time, data after LE↓ | 0 | | 1 | | 1 | | ns |

## switching characteristics over recommended operating free-air temperature range, $V_{CC}$ = 5 V ± 0.5 V (unless otherwise noted) (see Figure 1)

| PARAMETER | FROM (INPUT) | TO (OUTPUT) | $T_A$ = 25°C | | | SN54ACT373 | | SN74ACT373 | | UNIT |
|---|---|---|---|---|---|---|---|---|---|---|
| | | | MIN | TYP | MAX | MIN | MAX | MIN | MAX | |
| $t_{PLH}$ | D | Q | 2.5 | 8.5 | 10 | 1.5 | 12.5 | 1.5 | 11.5 | ns |
| $t_{PHL}$ | | | 2 | 8 | 10 | 1.5 | 12.5 | 1.5 | 11.5 | |
| $t_{PLH}$ | LE | Q | 2.5 | 8.5 | 11 | 1.5 | 12.5 | 2 | 11.5 | ns |
| $t_{PHL}$ | | | 2 | 8 | 10 | 1.5 | 11.5 | 1.5 | 11.5 | |
| $t_{PZH}$ | $\overline{OE}$ | Q | 2 | 8 | 9.5 | 1.5 | 11.5 | 1.5 | 10.5 | ns |
| $t_{PZL}$ | | | 2 | 7.5 | 9 | 1.5 | 11 | 1.5 | 10.5 | |
| $t_{PHZ}$ | $\overline{OE}$ | Q | 2.5 | 9 | 11 | 1.5 | 14 | 2.5 | 12.5 | ns |
| $t_{PLZ}$ | | | 1.5 | 7.5 | 8.5 | 1.5 | 11 | 1 | 10 | |

## operating characteristics, $V_{CC}$ = 5 V, $T_A$ = 25°C

| PARAMETER | | TEST CONDITIONS | TYP | UNIT |
|---|---|---|---|---|
| $C_{pd}$ | Power dissipation capacitance | $C_L$ = 50 pF, f = 1 MHz | 40 | pF |

## PARAMETER MEASUREMENT INFORMATION

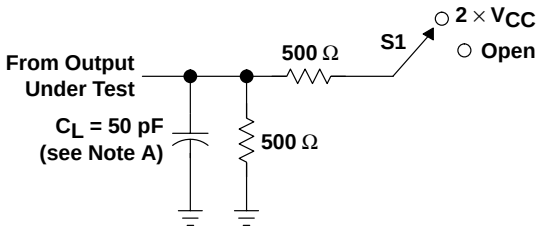


LOAD CIRCUIT

| TEST | S1 |
|---|---|
| $t_{PLH}/t_{PHL}$ | Open |
| $t_{PLZ}/t_{PZL}$ | 2 × $V_{CC}$ |
| $t_{PHZ}/t_{PZH}$ | Open |

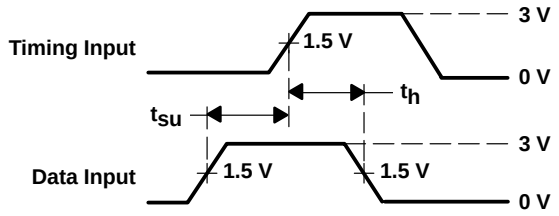


VOLTAGE WAVEFORMS

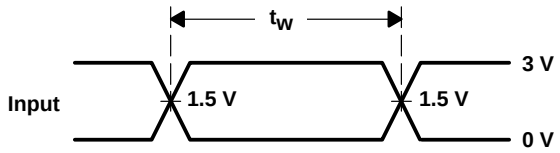


VOLTAGE WAVEFORMS

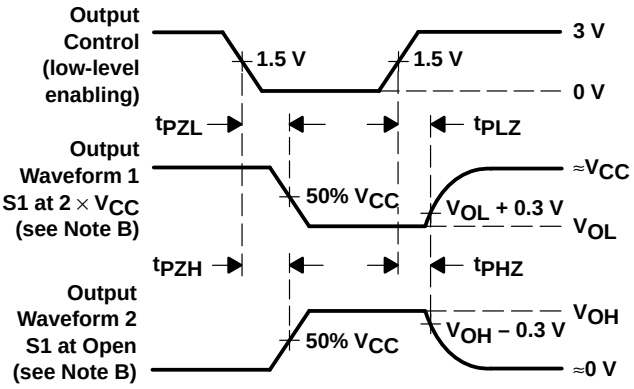


VOLTAGE WAVEFORMS

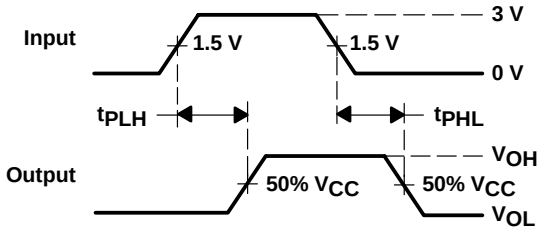


VOLTAGE WAVEFORMS

NOTES: A. $C_L$ includes probe and jig capacitance.
B. Waveform 1 is for an output with internal conditions such that the output is low except when disabled by the output control. Waveform 2 is for an output with internal conditions such that the output is high except when disabled by the output control.
C. All input pulses are supplied by generators having the following characteristics: PRR ≤ 1 MHz, $Z_O$ = 50 Ω, $t_r$ ≤ 2.5 ns, $t_f$ ≤ 2.5 ns.
D. The outputs are measured one at a time with one input transition per measurement.

**Figure 1. Load Circuit and Voltage Waveforms**

## PACKAGING INFORMATION

| Orderable Device | Status (1) | Package Type | Package Drawing | Pins | Package Qty | Eco Plan (2) | Lead/Ball Finish (6) | MSL Peak Temp (3) | Op Temp (°C) | Device Marking (4/5) | Samples |
|---|---|---|---|---|---|---|---|---|---|---|---|
| 5962-87556012A | ACTIVE | LCCC | FK | 20 | 1 | TBD | POST-PLATE | N / A for Pkg Type | -55 to 125 | 5962-87556012A SNJ54ACT 373FK | Samples |
| 5962-8755601RA | ACTIVE | CDIP | J | 20 | 1 | TBD | A42 | N / A for Pkg Type | -55 to 125 | 5962-8755601RA SNJ54ACT373J | Samples |
| 5962-8755601SA | ACTIVE | CFP | W | 20 | 1 | TBD | A42 | N / A for Pkg Type | -55 to 125 | 5962-8755601SA SNJ54ACT373W | Samples |
| 5962-8755601VRA | ACTIVE | CDIP | J | 20 | 1 | TBD | A42 | N / A for Pkg Type | -55 to 125 | 5962-8755601VR A SNV54ACT373J | Samples |
| SN74ACT373DBR | ACTIVE | SSOP | DB | 20 | 2000 | Green (RoHS & no Sb/Br) | CU NIPDAU | Level-1-260C-UNLIM | -40 to 85 | AD373 | Samples |
| SN74ACT373DW | ACTIVE | SOIC | DW | 20 | 25 | Green (RoHS & no Sb/Br) | CU NIPDAU | Level-1-260C-UNLIM | -40 to 85 | ACT373 | Samples |
| SN74ACT373DWR | ACTIVE | SOIC | DW | 20 | 2000 | Green (RoHS & no Sb/Br) | CU NIPDAU | Level-1-260C-UNLIM | -40 to 85 | ACT373 | Samples |
| SN74ACT373N | ACTIVE | PDIP | N | 20 | 20 | Pb-Free (RoHS) | CU NIPDAU | N / A for Pkg Type | -40 to 85 | SN74ACT373N | Samples |
| SN74ACT373NSR | ACTIVE | SO | NS | 20 | 2000 | Green (RoHS & no Sb/Br) | CU NIPDAU | Level-1-260C-UNLIM | -40 to 85 | ACT373 | Samples |
| SN74ACT373PW | ACTIVE | TSSOP | PW | 20 | 70 | Green (RoHS & no Sb/Br) | CU NIPDAU | Level-1-260C-UNLIM | -40 to 85 | AD373 | Samples |
| SN74ACT373PWR | ACTIVE | TSSOP | PW | 20 | 2000 | Green (RoHS & no Sb/Br) | CU NIPDAU | Level-1-260C-UNLIM | -40 to 85 | AD373 | Samples |
| SNJ54ACT373FK | ACTIVE | LCCC | FK | 20 | 1 | TBD | POST-PLATE | N / A for Pkg Type | -55 to 125 | 5962-87556012A SNJ54ACT 373FK | Samples |
| SNJ54ACT373J | ACTIVE | CDIP | J | 20 | 1 | TBD | A42 | N / A for Pkg Type | -55 to 125 | 5962-8755601RA SNJ54ACT373J | Samples |
| SNJ54ACT373W | ACTIVE | CFP | W | 20 | 1 | TBD | A42 | N / A for Pkg Type | -55 to 125 | 5962-8755601SA SNJ54ACT373W | Samples |

(1) The marketing status values are defined as follows:

**ACTIVE:** Product device recommended for new designs.
**LIFEBUY:** TI has announced that the device will be discontinued, and a lifetime-buy period is in effect.
**NRND:** Not recommended for new designs. Device is in production to support existing customers, but TI does not recommend using this part in a new design.
**PREVIEW:** Device has been announced but is not in production. Samples may or may not be available.
**OBSOLETE:** TI has discontinued the production of the device.

(2) **RoHS:** TI defines "RoHS" to mean semiconductor products that are compliant with the current EU RoHS requirements for all 10 RoHS substances, including the requirement that RoHS substance do not exceed 0.1% by weight in homogeneous materials. Where designed to be soldered at high temperatures, "RoHS" products are suitable for use in specified lead-free processes. TI may reference these types of products as "Pb-Free".
**RoHS Exempt:** TI defines "RoHS Exempt" to mean products that contain lead but are compliant with EU RoHS pursuant to a specific EU RoHS exemption.
**Green:** TI defines "Green" to mean the content of Chlorine (Cl) and Bromine (Br) based flame retardants meet JS709B low halogen requirements of <=1000ppm threshold. Antimony trioxide based flame retardants must also meet the <=1000ppm threshold requirement.

(3) MSL, Peak Temp. - The Moisture Sensitivity Level rating according to the JEDEC industry standard classifications, and peak solder temperature.

(4) There may be additional marking, which relates to the logo, the lot trace code information, or the environmental category on the device.

(5) Multiple Device Markings will be inside parentheses. Only one Device Marking contained in parentheses and separated by a "~" will appear on a device. If a line is indented then it is a continuation of the previous line and the two combined represent the entire Device Marking for that device.

(6) Lead/Ball Finish - Orderable Devices may have multiple material finish options. Finish options are separated by a vertical ruled line. Lead/Ball Finish values may wrap to two lines if the finish value exceeds the maximum column width.

**Important Information and Disclaimer:**The information provided on this page represents TI's knowledge and belief as of the date that it is provided. TI bases its knowledge and belief on information provided by third parties, and makes no representation or warranty as to the accuracy of such information. Efforts are underway to better integrate information from third parties. TI has taken and continues to take reasonable steps to provide representative and accurate information but may not have conducted destructive testing or chemical analysis on incoming materials and chemicals. TI and TI suppliers consider certain information to be proprietary, and thus CAS numbers and other limited information may not be available for release.

In no event shall TI's liability arising out of such information exceed the total purchase price of the TI part(s) at issue in this document sold by TI to Customer on an annual basis.

**OTHER QUALIFIED VERSIONS OF SN54ACT373, SN54ACT373-SP, SN74ACT373 :**

- Catalog: SN74ACT373, SN54ACT373
- Enhanced Product: SN74ACT373-EP, SN74ACT373-EP
- Military: SN54ACT373
- Space: SN54ACT373-SP

NOTE: Qualified Version Definitions:

- Catalog - TI's standard catalog product
- Enhanced Product - Supports Defense, Aerospace and Medical Applications
- Military - QML certified for Military and Defense Applications
- Space - Radiation tolerant, ceramic packaging and qualified for use in Space-based application

## TAPE AND REEL INFORMATION

**REEL DIMENSIONS**

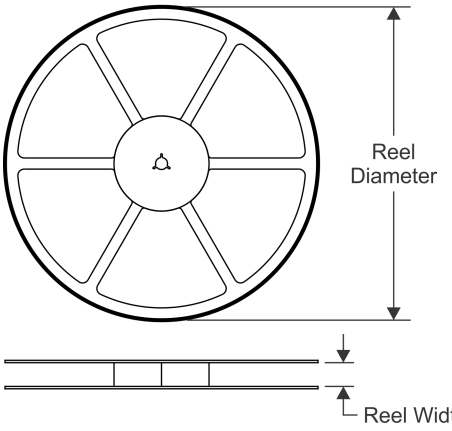


**TAPE DIMENSIONS**

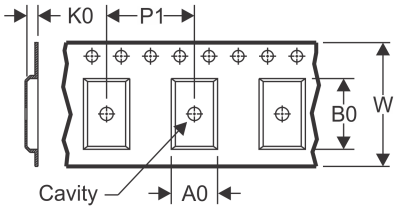


| | |
|---|---|
| A0 | Dimension designed to accommodate the component width |
| B0 | Dimension designed to accommodate the component length |
| K0 | Dimension designed to accommodate the component thickness |
| W | Overall width of the carrier tape |
| P1 | Pitch between successive cavity centers |

**QUADRANT ASSIGNMENTS FOR PIN 1 ORIENTATION IN TAPE**

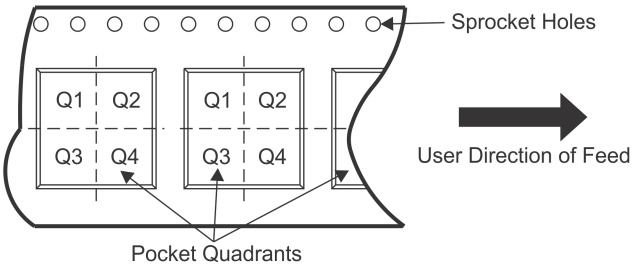


*All dimensions are nominal

| Device | Package Type | Package Drawing | Pins | SPQ | Reel Diameter (mm) | Reel Width W1 (mm) | A0 (mm) | B0 (mm) | K0 (mm) | P1 (mm) | W (mm) | Pin1 Quadrant |
|---|---|---|---|---|---|---|---|---|---|---|---|---|
| SN74ACT373DBR | SSOP | DB | 20 | 2000 | 330.0 | 16.4 | 8.2 | 7.5 | 2.5 | 12.0 | 16.0 | Q1 |
| SN74ACT373DWR | SOIC | DW | 20 | 2000 | 330.0 | 24.4 | 10.8 | 13.3 | 2.7 | 12.0 | 24.0 | Q1 |
| SN74ACT373NSR | SO | NS | 20 | 2000 | 330.0 | 24.4 | 8.4 | 13.0 | 2.5 | 12.0 | 24.0 | Q1 |
| SN74ACT373PWR | TSSOP | PW | 20 | 2000 | 330.0 | 16.4 | 6.95 | 7.1 | 1.6 | 8.0 | 16.0 | Q1 |

**TAPE AND REEL BOX DIMENSIONS**

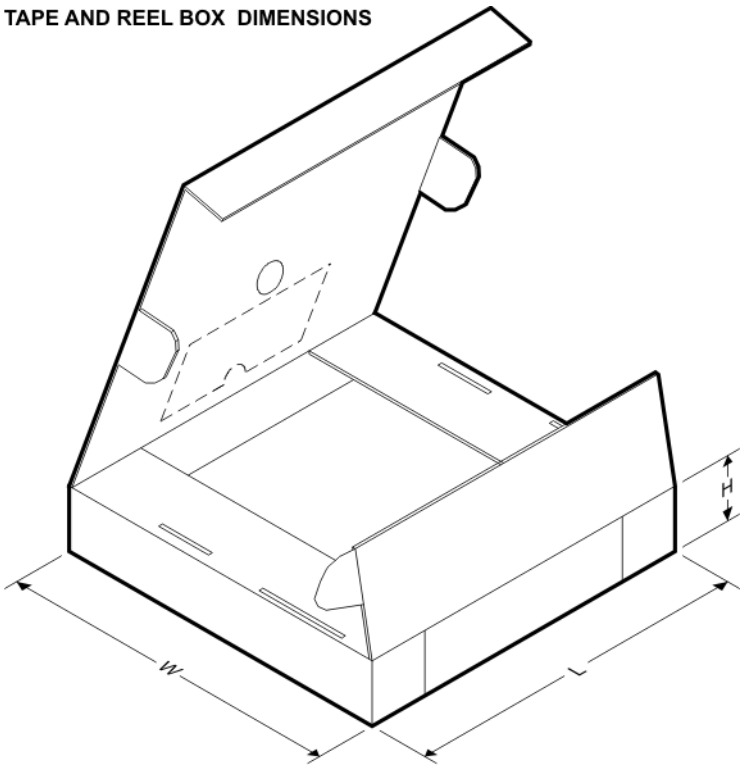


*All dimensions are nominal

| Device | Package Type | Package Drawing | Pins | SPQ | Length (mm) | Width (mm) | Height (mm) |
|---|---|---|---|---|---|---|---|
| SN74ACT373DBR | SSOP | DB | 20 | 2000 | 367.0 | 367.0 | 38.0 |
| SN74ACT373DWR | SOIC | DW | 20 | 2000 | 367.0 | 367.0 | 45.0 |
| SN74ACT373NSR | SO | NS | 20 | 2000 | 367.0 | 367.0 | 45.0 |
| SN74ACT373PWR | TSSOP | PW | 20 | 2000 | 367.0 | 367.0 | 38.0 |

W (R–GDFP–F20) CERAMIC DUAL FLATPACK

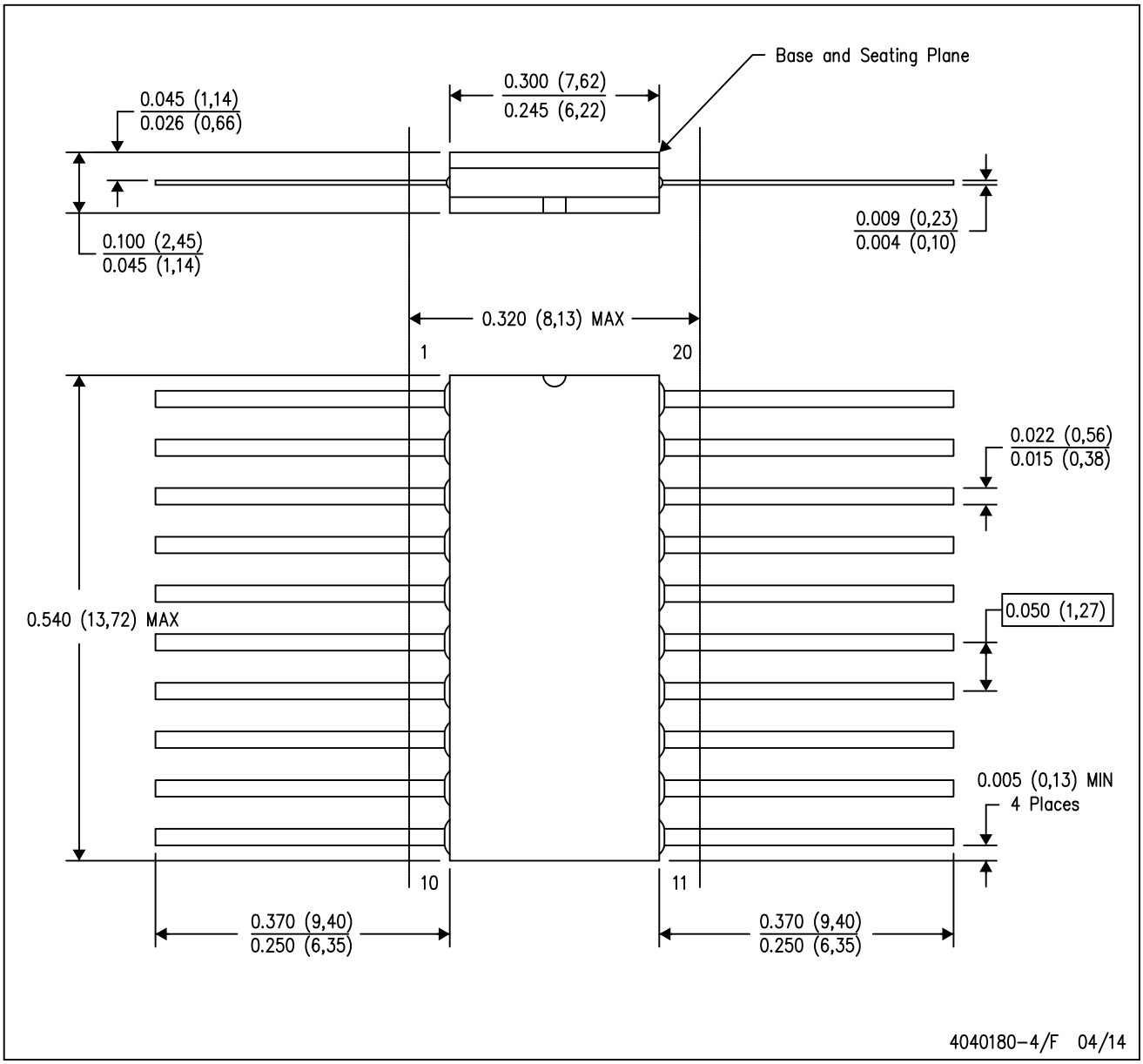


NOTES:
A. All linear dimensions are in inches (millimeters).
B. This drawing is subject to change without notice.
C. This package can be hermetically sealed with a ceramic lid using glass frit.
D. Index point is provided on cap for terminal identification only.
E. Falls within Mil–Std 1835 GDFP2–F20

FK (S–CQCC–N**) LEADLESS CERAMIC CHIP CARRIER

28 TERMINAL SHOWN

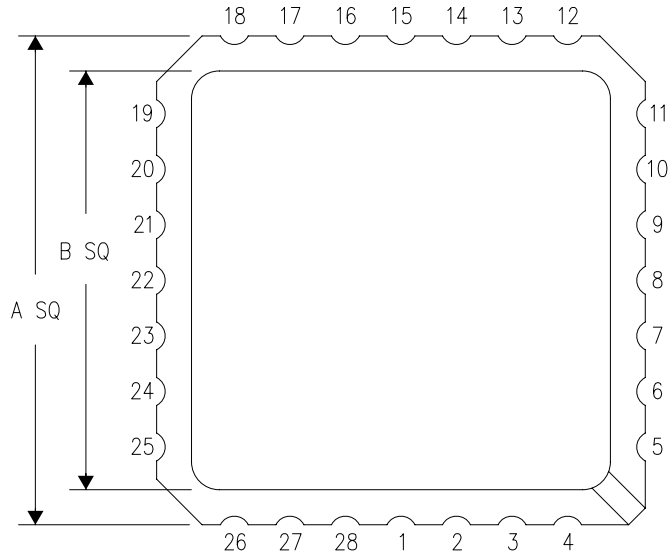


| NO. OF TERMINALS ** | A | | B | |
|---|---|---|---|---|
| | MIN | MAX | MIN | MAX |
| 20 | 0.342 (8,69) | 0.358 (9,09) | 0.307 (7,80) | 0.358 (9,09) |
| 28 | 0.442 (11,23) | 0.458 (11,63) | 0.406 (10,31) | 0.458 (11,63) |
| 44 | 0.640 (16,26) | 0.660 (16,76) | 0.495 (12,58) | 0.560 (14,22) |
| 52 | 0.740 (18,78) | 0.761 (19,32) | 0.495 (12,58) | 0.560 (14,22) |
| 68 | 0.938 (23,83) | 0.962 (24,43) | 0.850 (21,6) | 0.858 (21,8) |
| 84 | 1.141 (28,99) | 1.165 (29,59) | 1.047 (26,6) | 1.063 (27,0) |

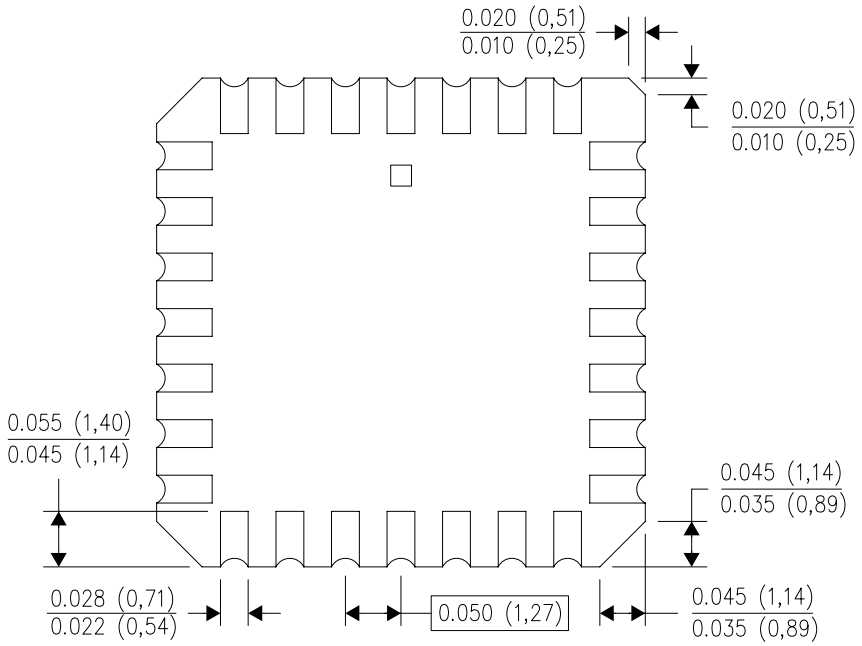


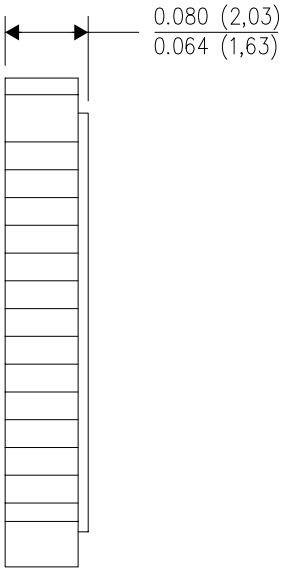


4040140/D 01/11

NOTES:
A. All linear dimensions are in inches (millimeters).
B. This drawing is subject to change without notice.
C. This package can be hermetically sealed with a metal lid.
D. Falls within JEDEC MS–004

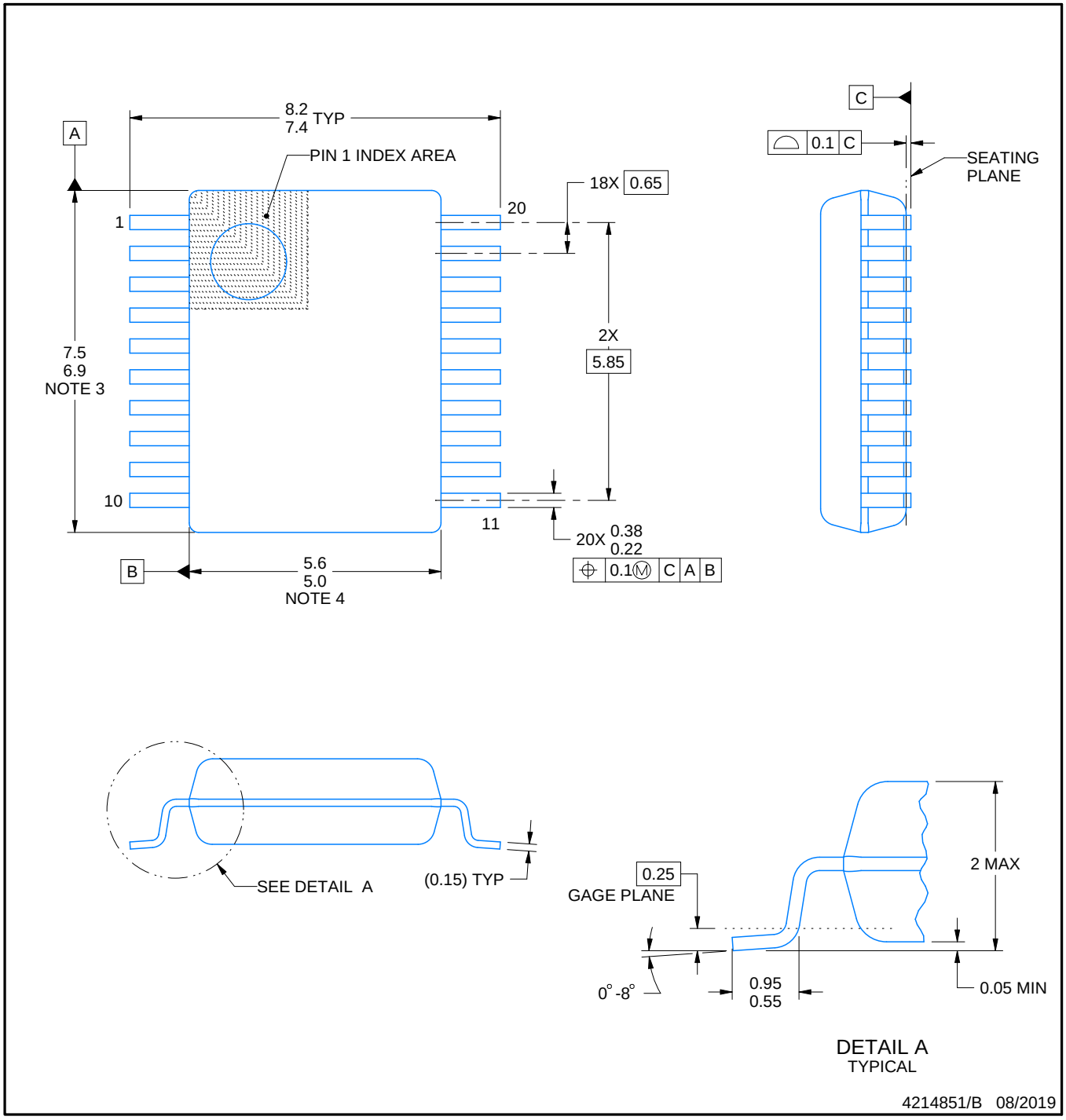


NOTES:

1. All linear dimensions are in millimeters. Any dimensions in parenthesis are for reference only. Dimensioning and tolerancing per ASME Y14.5M.
2. This drawing is subject to change without notice.
3. This dimension does not include mold flash, protrusions, or gate burrs. Mold flash, protrusions, or gate burrs shall not exceed 0.15 mm per side.
4. This dimension does not include interlead flash. Interlead flash shall not exceed 0.25 mm per side.
5. Reference JEDEC registration MO-150.

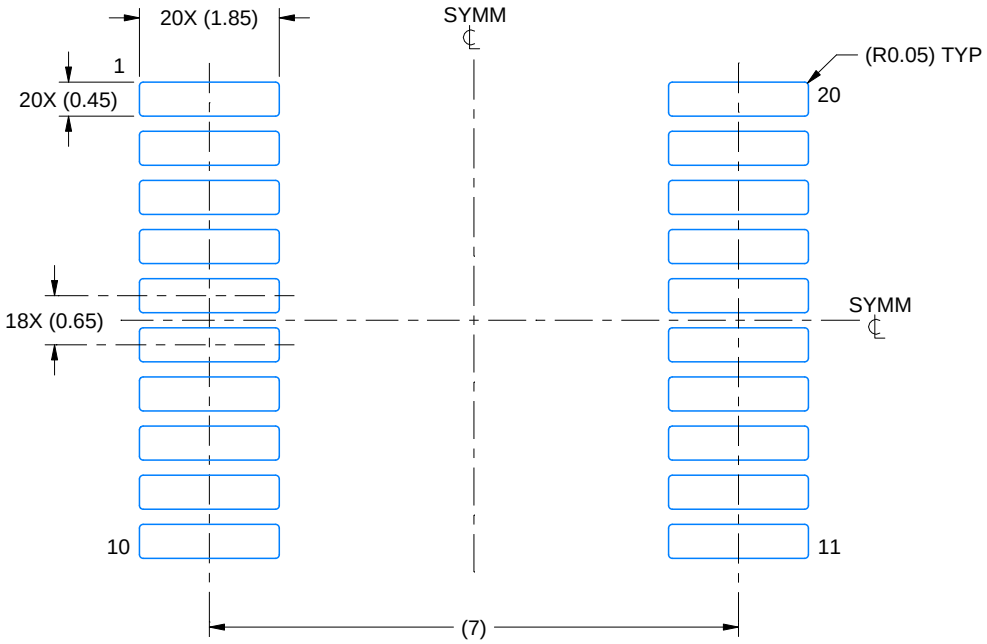


LAND PATTERN EXAMPLE
EXPOSED METAL SHOWN
SCALE: 10X

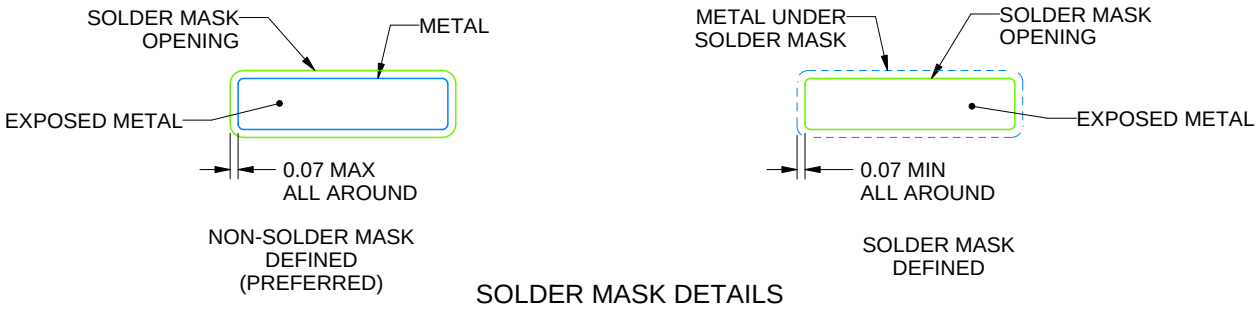


SOLDER MASK DETAILS

4214851/B 08/2019

NOTES: (continued)

6. Publication IPC-7351 may have alternate designs.
7. Solder mask tolerances between and around signal pads can vary based on board fabrication site.

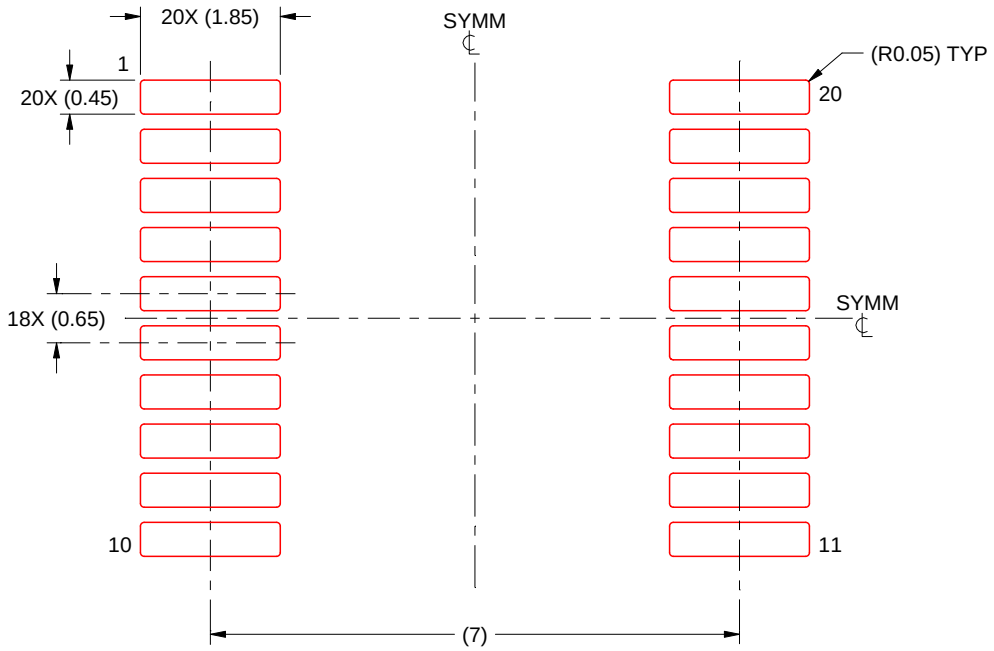


SOLDER PASTE EXAMPLE
BASED ON 0.125 mm THICK STENCIL
SCALE: 10X

4214851/B 08/2019

NOTES: (continued)

8. Laser cutting apertures with trapezoidal walls and rounded corners may offer better paste release. IPC-7525 may have alternate design recommendations.
9. Board assembly site may have different recommendations for stencil design.

## MECHANICAL DATA

**NS (R-PDSO-G**)** **PLASTIC SMALL-OUTLINE PACKAGE**

**14-PINS SHOWN**

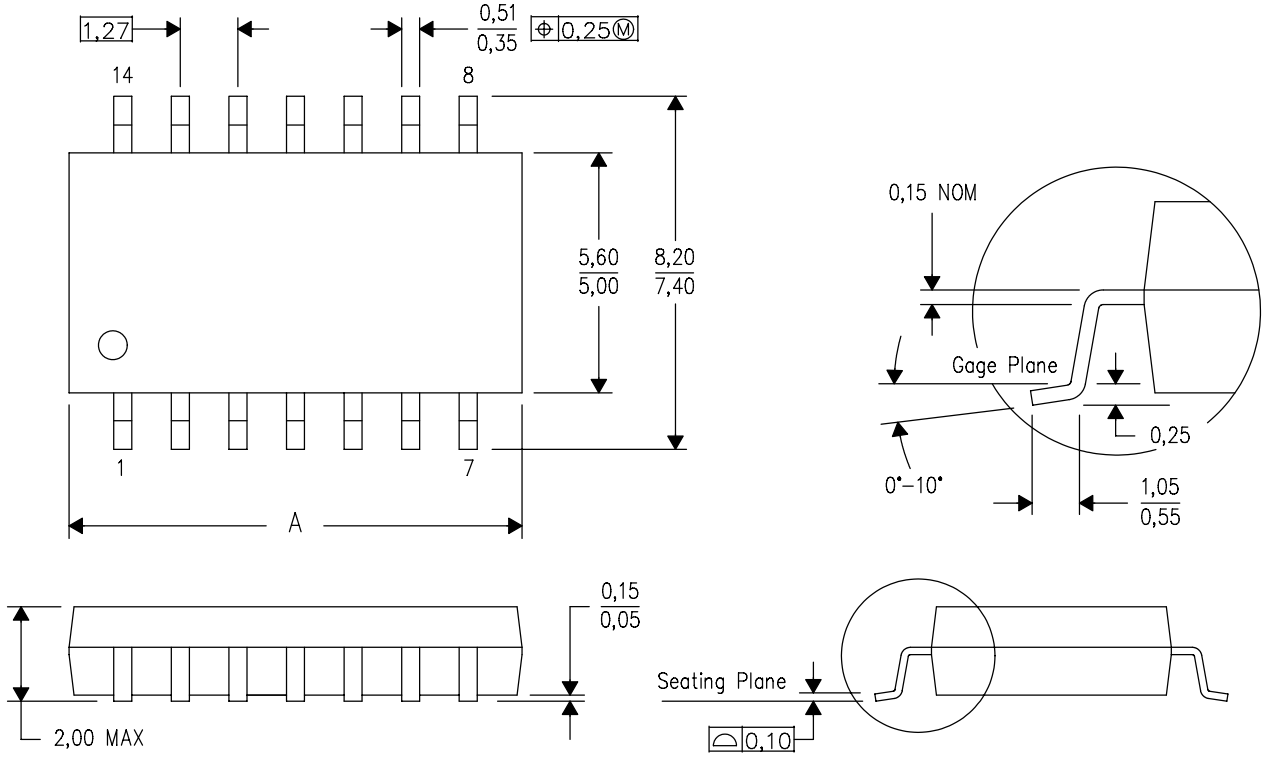


| DIM \ PINS ** | 14 | 16 | 20 | 24 |
|---|---|---|---|---|
| A MAX | 10,50 | 10,50 | 12,90 | 15,30 |
| A MIN | 9,90 | 9,90 | 12,30 | 14,70 |

4040062/C 03/03

NOTES:
A. All linear dimensions are in millimeters.
B. This drawing is subject to change without notice.
C. Body dimensions do not include mold flash or protrusion, not to exceed 0,15.

J (R–GDIP–T**) CERAMIC DUAL IN–LINE PACKAGE

14 LEADS SHOWN

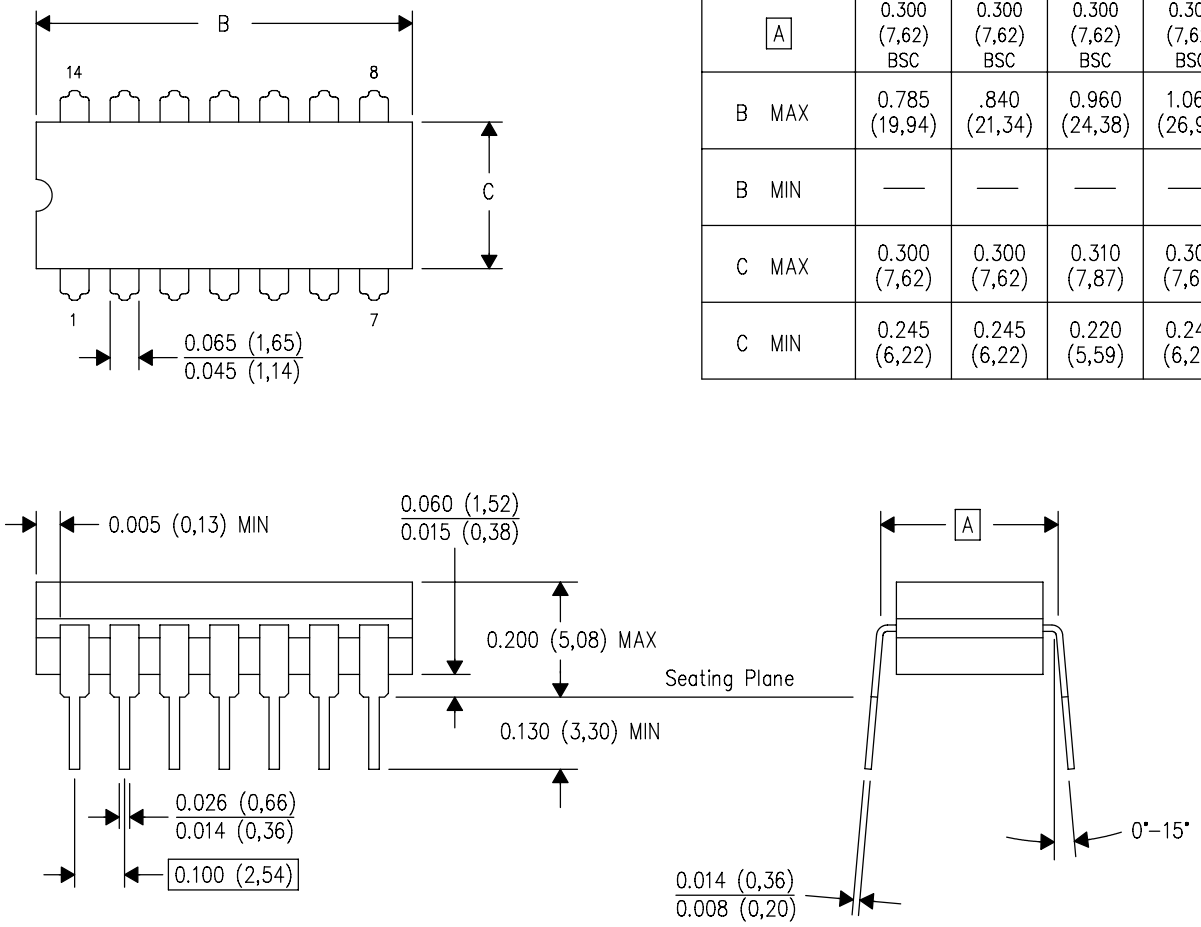


| DIM \ PINS ** | 14 | 16 | 18 | 20 |
|---|---|---|---|---|
| A | 0.300 (7,62) BSC | 0.300 (7,62) BSC | 0.300 (7,62) BSC | 0.300 (7,62) BSC |
| B MAX | 0.785 (19,94) | .840 (21,34) | 0.960 (24,38) | 1.060 (26,92) |
| B MIN | — | — | — | — |
| C MAX | 0.300 (7,62) | 0.300 (7,62) | 0.310 (7,87) | 0.300 (7,62) |
| C MIN | 0.245 (6,22) | 0.245 (6,22) | 0.220 (5,59) | 0.245 (6,22) |

4040083/F 03/03

NOTES:
- A. All linear dimensions are in inches (millimeters).
- B. This drawing is subject to change without notice.
- C. This package is hermetically sealed with a ceramic lid using glass frit.
- D. Index point is provided on cap for terminal identification only on press ceramic glass frit seal only.
- E. Falls within MIL STD 1835 GDIP1–T14, GDIP1–T16, GDIP1–T18 and GDIP1–T20.

PW (R-PDSO-G20) PLASTIC SMALL OUTLINE

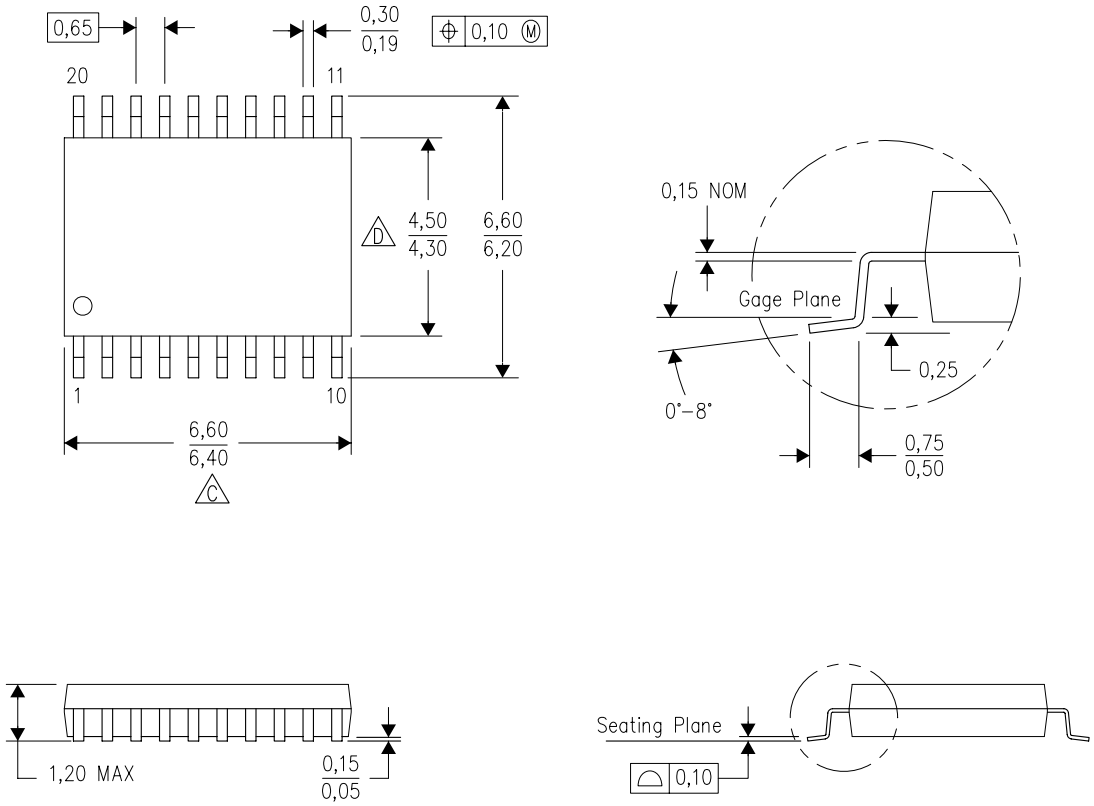


4040064-5/G 02/11

NOTES:
A. All linear dimensions are in millimeters. Dimensioning and tolerancing per ASME Y14.5M-1994.
B. This drawing is subject to change without notice.
C. Body length does not include mold flash, protrusions, or gate burrs. Mold flash, protrusions, or gate burrs shall not exceed 0,15 each side.
D. Body width does not include interlead flash. Interlead flash shall not exceed 0,25 each side.
E. Falls within JEDEC MO-153

PW (R–PDSO–G20) PLASTIC SMALL OUTLINE

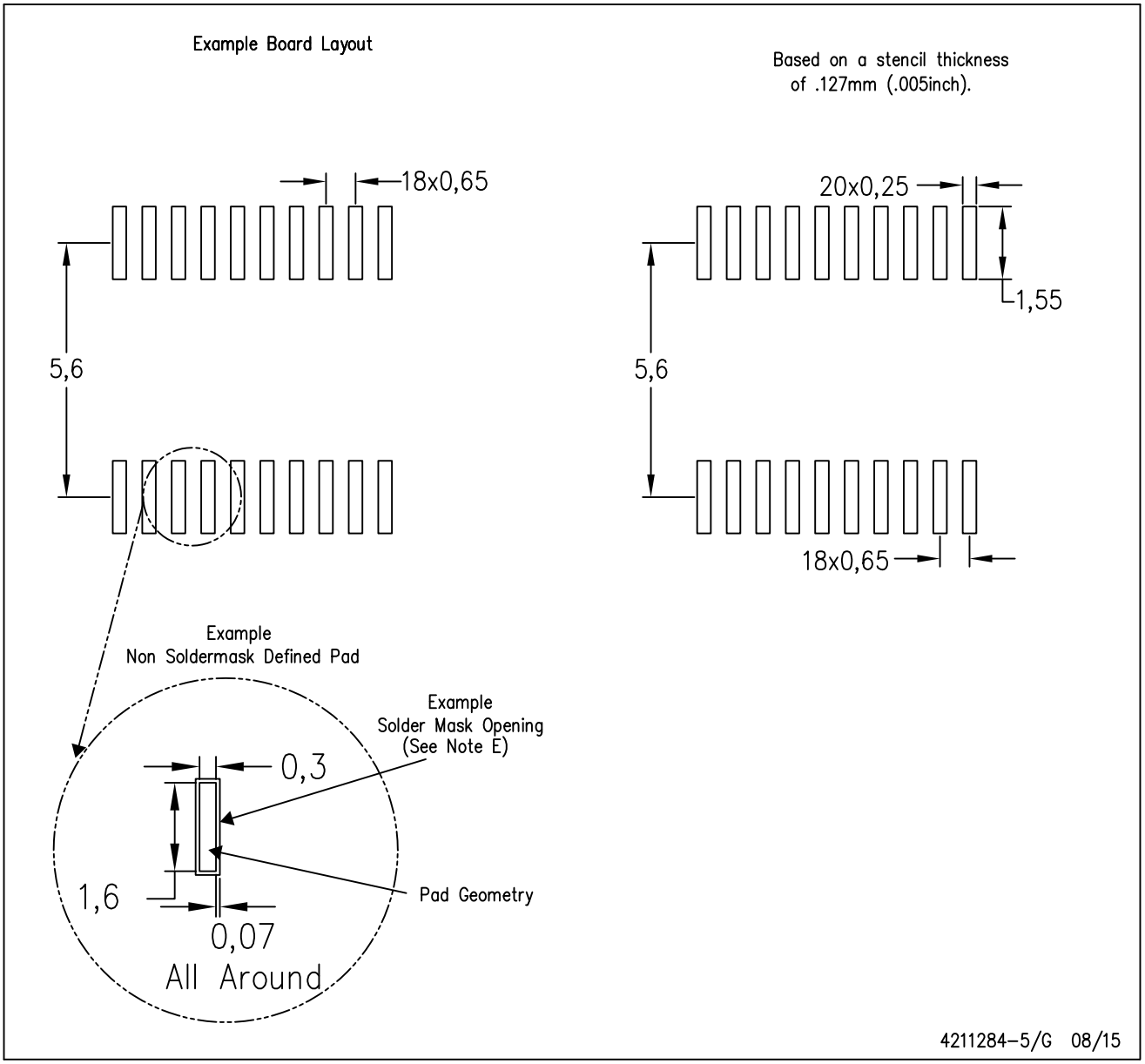


NOTES:
A. All linear dimensions are in millimeters.
B. This drawing is subject to change without notice.
C. Publication IPC–7351 is recommended for alternate design.
D. Laser cutting apertures with trapezoidal walls and also rounding corners will offer better paste release. Customers should contact their board assembly site for stencil design recommendations. Refer to IPC–7525 for other stencil recommendations.
E. Customers should contact their board fabrication site for solder mask tolerances between and around signal pads.

## N (R–PDIP–T**) PLASTIC DUAL–IN–LINE PACKAGE

16 PINS SHOWN

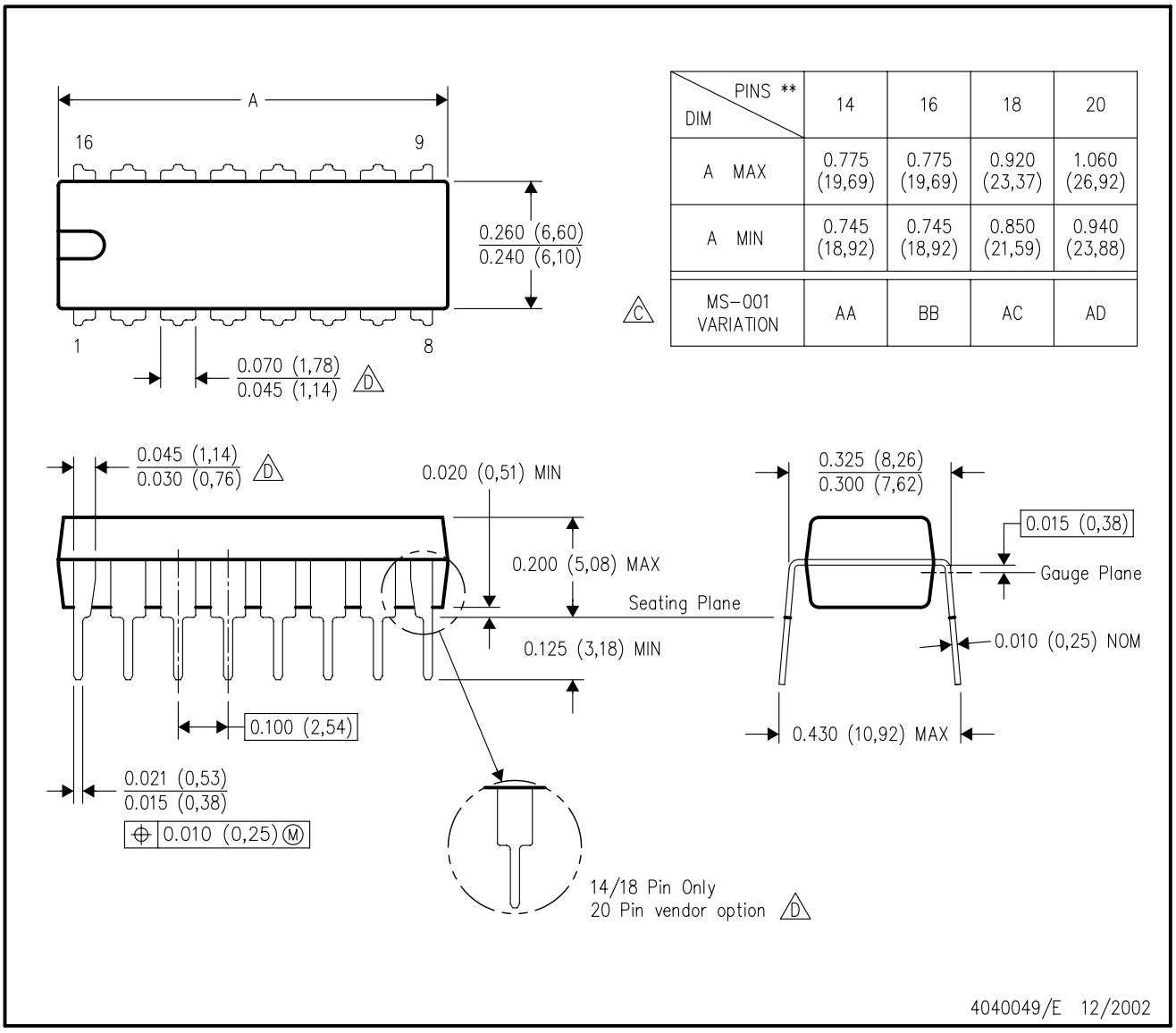


| DIM \ PINS ** | 14 | 16 | 18 | 20 |
|---|---|---|---|---|
| A MAX | 0.775 (19,69) | 0.775 (19,69) | 0.920 (23,37) | 1.060 (26,92) |
| A MIN | 0.745 (18,92) | 0.745 (18,92) | 0.850 (21,59) | 0.940 (23,88) |
| MS–001 VARIATION (C) | AA | BB | AC | AD |

NOTES:
A. All linear dimensions are in inches (millimeters).
B. This drawing is subject to change without notice.
C. Falls within JEDEC MS–001, except 18 and 20 pin minimum body length (Dim A).
D. The 20 pin end lead shoulder width is a vendor option, either half or full width.

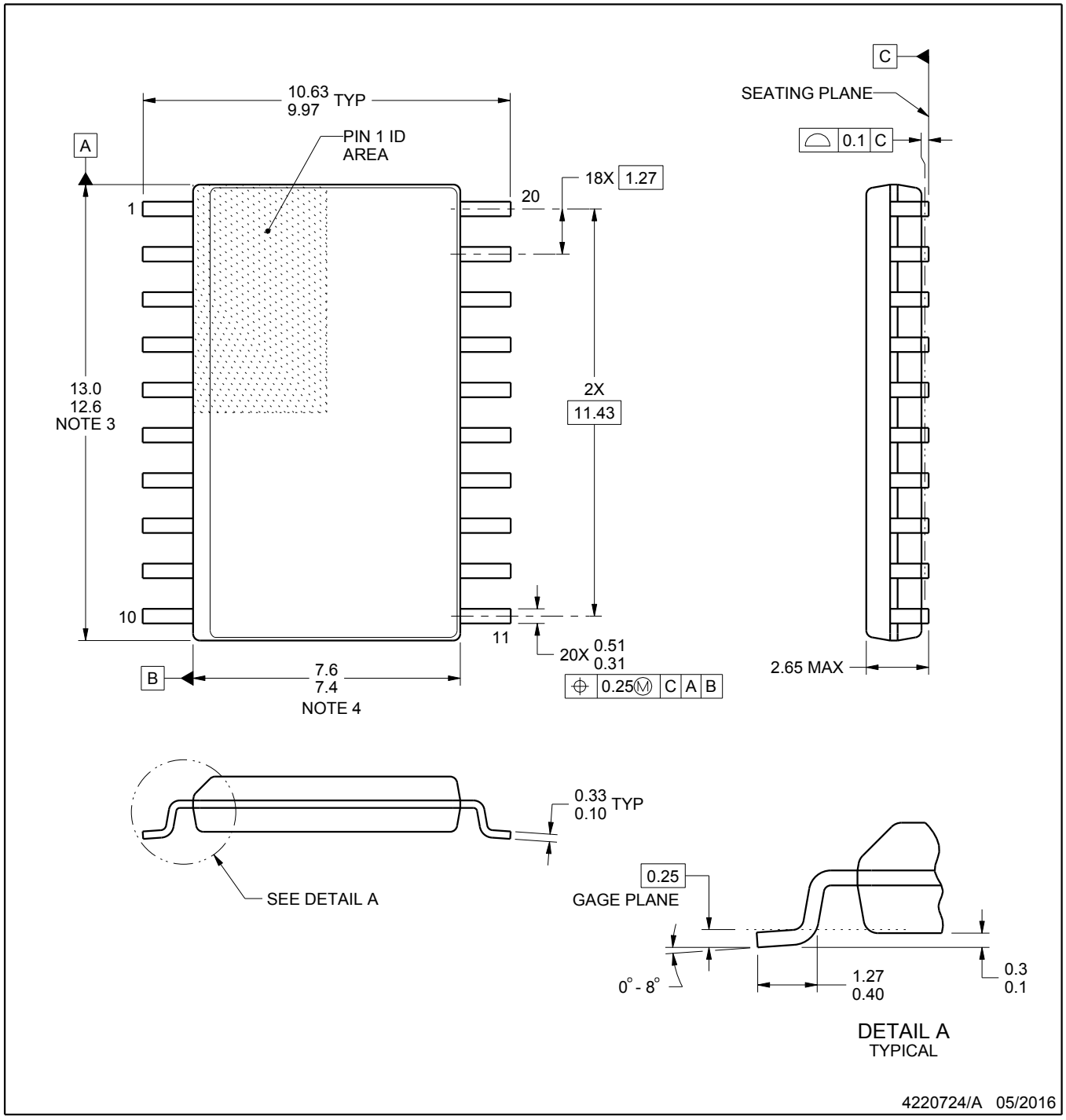


NOTES:

1. All linear dimensions are in millimeters. Dimensions in parenthesis are for reference only. Dimensioning and tolerancing per ASME Y14.5M.
2. This drawing is subject to change without notice.
3. This dimension does not include mold flash, protrusions, or gate burrs. Mold flash, protrusions, or gate burrs shall not exceed 0.15 mm per side.
4. This dimension does not include interlead flash. Interlead flash shall not exceed 0.43 mm per side.
5. Reference JEDEC registration MS-013.

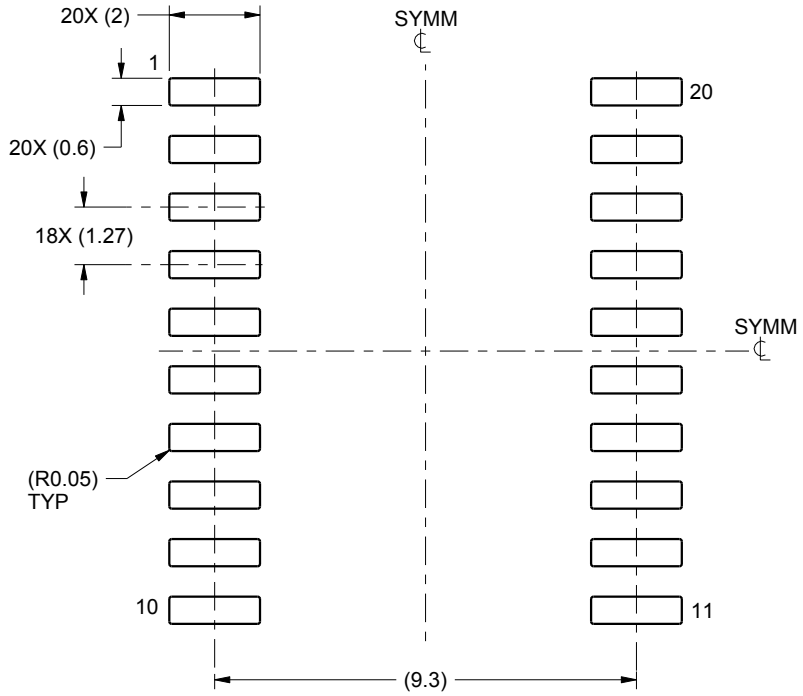


LAND PATTERN EXAMPLE
SCALE:6X

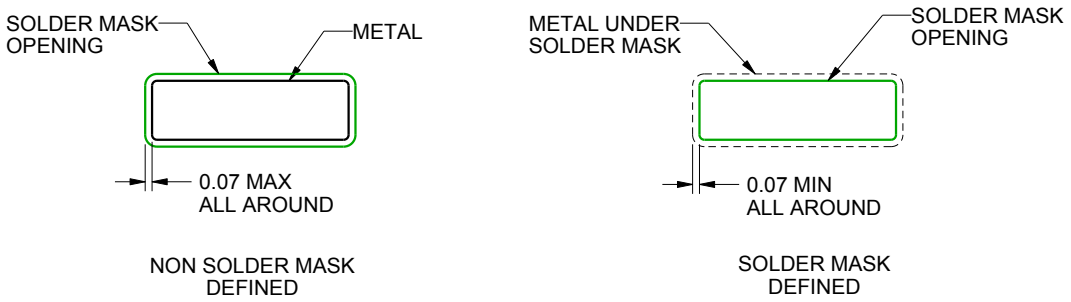


SOLDER MASK DETAILS

4220724/A 05/2016

NOTES: (continued)

6. Publication IPC-7351 may have alternate designs.
7. Solder mask tolerances between and around signal pads can vary based on board fabrication site.

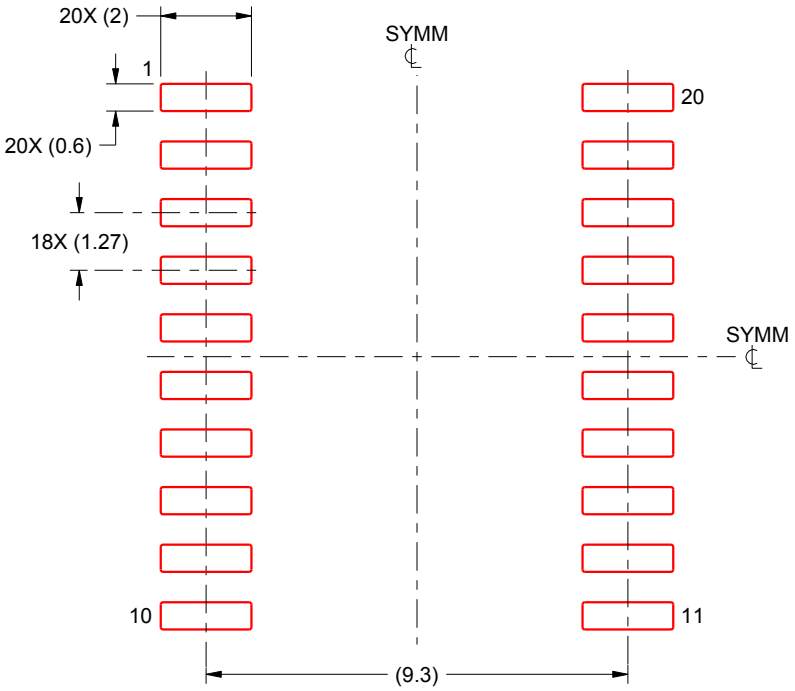


SOLDER PASTE EXAMPLE
BASED ON 0.125 mm THICK STENCIL
SCALE:6X

4220724/A 05/2016

NOTES: (continued)

8. Laser cutting apertures with trapezoidal walls and rounded corners may offer better paste release. IPC-7525 may have alternate design recommendations.
9. Board assembly site may have different recommendations for stencil design.

## IMPORTANT NOTICE AND DISCLAIMER

TI PROVIDES TECHNICAL AND RELIABILITY DATA (INCLUDING DATASHEETS), DESIGN RESOURCES (INCLUDING REFERENCE DESIGNS), APPLICATION OR OTHER DESIGN ADVICE, WEB TOOLS, SAFETY INFORMATION, AND OTHER RESOURCES “AS IS” AND WITH ALL FAULTS, AND DISCLAIMS ALL WARRANTIES, EXPRESS AND IMPLIED, INCLUDING WITHOUT LIMITATION ANY IMPLIED WARRANTIES OF MERCHANTABILITY, FITNESS FOR A PARTICULAR PURPOSE OR NON-INFRINGEMENT OF THIRD PARTY INTELLECTUAL PROPERTY RIGHTS.

These resources are intended for skilled developers designing with TI products. You are solely responsible for (1) selecting the appropriate TI products for your application, (2) designing, validating and testing your application, and (3) ensuring your application meets applicable standards, and any other safety, security, or other requirements. These resources are subject to change without notice. TI grants you permission to use these resources only for development of an application that uses the TI products described in the resource. Other reproduction and display of these resources is prohibited. No license is granted to any other TI intellectual property right or to any third party intellectual property right. TI disclaims responsibility for, and you will fully indemnify TI and its representatives against, any claims, damages, costs, losses, and liabilities arising out of your use of these resources.

TI’s products are provided subject to TI’s Terms of Sale (www.ti.com/legal/termsofsale.html) or other applicable terms available either on ti.com or provided in conjunction with such TI products. TI’s provision of these resources does not expand or otherwise alter TI’s applicable warranties or warranty disclaimers for TI products.

Mailing Address: Texas Instruments, Post Office Box 655303, Dallas, Texas 75265
Copyright © 2019, Texas Instruments Incorporated