SN74LVC240A Octal Buffer/Driver with 3-State Outputs

1 Features

- Operates From 1.65 V to 3.6 V
- Inputs Accept Voltages to 5.5 V
- Max t_{pd} of 6.5 ns at 3.3 V
- Typical V_{OLP} (Output Ground Bounce) <0.8 V at V_{CC} = 3.3 V, T_A = 25°C
- Typical V_{OHV} (Output V_{OH} Undershoot) >2 V at V_{CC} = 3.3 V, T_A = 25°C
- Supports Mixed-Mode Signal Operation on All Ports (5-V Input/Output Voltage With 3.3-V V_{CC})
- I_{off} Supports Live Insertion, Partial-Power-Down Mode, and Back-Drive Protection
- Latch-Up Performance Exceeds 250 mA Per JESD 17
- ESD Protection Exceeds JESD 22
  - 2000-V Human-Body Model (A114-A)
  - 200-V Machine Model (A115-A)
  - 1000-V Charged-Device Model (C101)

2 Applications

- Servers
- PCs and Notebooks
- Network Switches
- Wearable Health and Fitness Devices
- Telecom Infrastructures
- Electronic Points of Sale

3 Description

This octal buffer/driver is designed for 1.65-V to 3.6-V V_{CC} operation.

The SN74LVC240A is designed specifically to improve the performance and density of 3-state memory address drivers, clock drivers, and bus-oriented receivers and transmitters.

Device Information(1)

PART NUMBER	PACKAGE	BODY SIZE
SN74LVC240A	SSOP (20)	7.20 mm × 5.30 mm
	TVSOP (20)	5.00 mm × 4.40 mm
	SOIC (20)	12.80 mm × 7.50 mm
	SOP (20)	12.60 mm × 5.30 mm
	TSSOP (20)	6.50 mm × 4.40 mm

(1) For all available packages, see the orderable addendum at the end of the data sheet.

4 Simplified Schematic

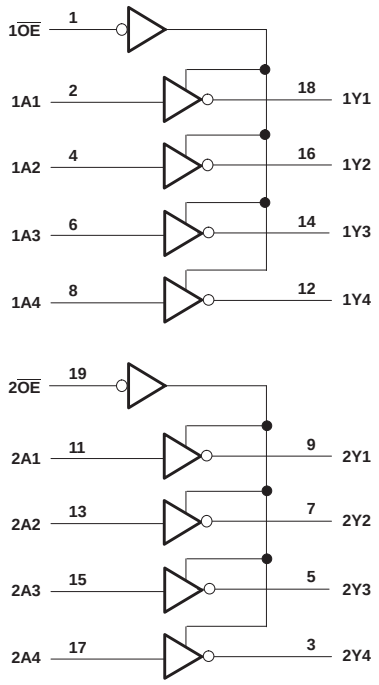

An IMPORTANT NOTICE at the end of this data sheet addresses availability, warranty, changes, use in safety-critical applications, intellectual property matters and other important disclaimers. PRODUCTION DATA.

Table of Contents

1 Features ... 1
2 Applications ... 1
3 Description ... 1
4 Simplified Schematic ... 1
5 Revision History ... 2
6 Pin Configuration and Functions ... 3
7 Specifications ... 4
7.1 Absolute Maximum Ratings ... 4
7.2 Handling Ratings ... 4
7.3 Recommended Operating Conditions ... 5
7.4 Thermal Information ... 5
7.5 Electrical Characteristics ... 6
7.6 Switching Characteristics, –40°C to 85°C ... 6
7.7 Switching Characteristics, –40°C to 125°C ... 6
7.8 Operating Characteristics ... 7
7.9 Typical Characteristics ... 7
8 Parameter Measurement Information ... 8
9 Detailed Description ... 9
9.1 Overview ... 9
9.2 Functional Block Diagram ... 9
9.3 Feature Description ... 10
9.4 Device Functional Modes ... 10
10 Application and Implementation ... 11
10.1 Application Information ... 11
10.2 Typical Application ... 11
11 Power Supply Recommendations ... 12
12 Layout ... 12
12.1 Layout Guidelines ... 12
12.2 Layout Example ... 12
13 Device and Documentation Support ... 13
13.1 Trademarks ... 13
13.2 Electrostatic Discharge Caution ... 13
13.3 Glossary ... 13
14 Mechanical, Packaging, and Orderable Information ... 13

5 Revision History

NOTE: Page numbers for previous revisions may differ from page numbers in the current version.

Changes from Revision K (February 2005) to Revision L	Page
• Updated document to new TI data sheet standards.	1
• Deleted Ordering Information table.	1
• Updated I_{off} bullet in Features list.	1
• Added Applications.	1
• Added Device Information table.	1
• Added Handling Ratings table.	4
• Changed MAX ambient temperature to 125°C in Recommended Operating Conditions table.	5
• Added Thermal Information table.	5
• Added –40°C to 125°C temperature range to Electrical Characteristics table.	6
• Added Switching Characteristics table for –40°C to 125°C temperature range.	6
• Added Typical Characteristics.	7
• Added Detailed Description section.	9
• Added Application and Implementation section.	11

Copyright © 1993–2014, Texas Instruments Incorporated

6 Pin Configuration and Functions

DB, DGV, DW, NS, OR PW PACKAGE
(TOP VIEW)

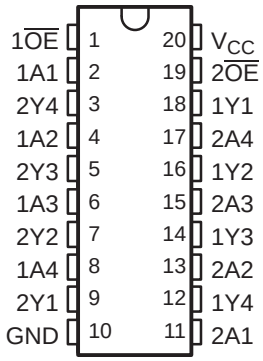

Pin Functions

PIN		I/O	DESCRIPTION
NO.	NAME		
1	1$\overline{OE}$	I	Output Enable 1
2	1A1	I	1A1 Input
3	2Y4	O	2Y4 Output
4	1A2	I	1A2 Input
5	2Y3	O	2Y3 Output
6	1A3	I	1A3 Input
7	2Y2	O	2Y2 Output
8	1A4	I	1A4 Input
9	2Y1	O	2Y1 Output
10	GND	—	Ground Pin
11	2A1	I	2A1 Input
12	1Y4	O	1Y4 Output
13	2A2	I	2A2 Input
14	1Y3	O	1Y3 Output
15	2A3	I	2A3 Input
16	1Y2	O	1Y2 Output
17	2A4	I	2A4 Input
18	1Y1	O	1Y1 Output
19	2$\overline{OE}$	I	Output Enable 2
20	VCC	—	Power Pin

Copyright © 1993–2014, Texas Instruments Incorporated

7 Specifications

7.1 Absolute Maximum Ratings

over operating free-air temperature range (unless otherwise noted)[1]

			MIN	MAX	UNIT
V_{CC}	Supply voltage range		–0.5	6.5	V
V_I	Input voltage range[2]		–0.5	6.5	V
V_O	Voltage range, applied to any output in the high-impedance or power-off state[2]		–0.5	6.5	V
V_O	Voltage range, applied to any output in the high or low state[2][3]		–0.5	V_{CC} + 0.5	V
I_{IK}	Input clamp current	$V_I < 0$		–50	mA
I_{OK}	Output clamp current	$V_O < 0$		–50	mA
I_O	Continuous output current			±50	mA
	Continuous current through V_{CC} or GND			±100	mA

(1) Stresses beyond those listed under *Absolute Maximum Ratings* may cause permanent damage to the device. These are stress ratings only, and functional operation of the device at these or any other conditions beyond those indicated under *Recommended Operating Conditions* is not implied. Exposure to absolute-maximum-rated conditions for extended periods may affect device reliability.
(2) The input negative-voltage and output voltage ratings may be exceeded if the input and output current ratings are observed.
(3) The value of V_{CC} is provided in the *Recommended Operating Conditions* table.

7.2 Handling Ratings

			MIN	MAX	UNIT
T_{stg}	Storage temperature range		–65	150	°C
$V_{(ESD)}$	Electrostatic discharge	Human body model (HBM), per ANSI/ESDA/JEDEC JS-001, all pins[1]	0	2000	V
		Charged device model (CDM), per JEDEC specification JESD22-C101, all pins[2]	0	1000	

(1) JEDEC document JEP155 states that 500-V HBM allows safe manufacturing with a standard ESD control process.
(2) JEDEC document JEP157 states that 250-V CDM allows safe manufacturing with a standard ESD control process.

Copyright © 1993–2014, Texas Instruments Incorporated

7.3 Recommended Operating Conditions

over operating free-air temperature range (unless otherwise noted)[1]

			MIN	MAX	UNIT
V_{CC}	Supply voltage	Operating	1.65	3.6	V
		Data retention only	1.5		
V_{IH}	High-level input voltage	V_{CC} = 1.65 V to 1.95 V	0.65 × V_{CC}		V
		V_{CC} = 2.3 V to 2.7 V	1.7		
		V_{CC} = 2.7 V to 3.6 V	2		
V_{IL}	Low-level input voltage	V_{CC} = 1.65 V to 1.95 V		0.35 × V_{CC}	V
		V_{CC} = 2.3 V to 2.7 V		0.7	
		V_{CC} = 2.7 V to 3.6 V		0.8	
V_I	Input voltage		0	5.5	V
V_O	Output voltage	High or low state	0	V_{CC}	V
		3-state	0	5.5	
I_{OH}	High-level output current	V_{CC} = 1.65 V		–4	mA
		V_{CC} = 2.3 V		–8	
		V_{CC} = 2.7 V		–12	
		V_{CC} = 3 V		–24	
I_{OL}	Low-level output current	V_{CC} = 1.65 V		4	mA
		V_{CC} = 2.3 V		8	
		V_{CC} = 2.7 V		12	
		V_{CC} = 3 V		24	
Δt/Δv	Input transition rise or fall rate			6	ns/V
T_A	Operating free-air temperature		–40	125	°C

(1) All unused inputs of the device must be held at V_{CC} or GND to ensure proper device operation. Refer to the TI application report, *Implications of Slow or Floating CMOS Inputs*, (SCBA004).

7.4 Thermal Information

THERMAL METRIC[1]		PW	UNIT
		20 PINS	
$R_{\theta JA}$	Junction-to-ambient thermal resistance	102.5	°C/W
$R_{\theta JC(top)}$	Junction-to-case (top) thermal resistance	35.9	
$R_{\theta JB}$	Junction-to-board thermal resistance	53.5	
ψ_{JT}	Junction-to-top characterization parameter	2.2	
ψ_{JB}	Junction-to-board characterization parameter	52.9	
$R_{\theta JC(bot)}$	Junction-to-case (bottom) thermal resistance	n/a	

(1) For more information about traditional and new thermal metrics, see the *IC Package Thermal Metrics* application report (SPRA953).

Copyright © 1993–2014, Texas Instruments Incorporated

7.5 Electrical Characteristics

over recommended operating free-air temperature range (unless otherwise noted)

PARAMETER	TEST CONDITIONS		V_{CC}	–40°C to 85°C			–40°C to 125°C			UNIT
				MIN	TYP(1)	MAX	MIN	TYP(1)	MAX	
V_{OH}	I_{OH} = –100 µA		1.65 V to 3.6 V	V_{CC} – 0.2			V_{CC} – 0.2			V
	I_{OH} = –4 mA		1.65 V	1.2			1.2			
	I_{OH} = –8 mA		2.3 V	1.7			1.7			
	I_{OH} = –12 mA		2.7 V	2.2			2.2			
			3 V	2.4			2.4			
	I_{OH} = –24 mA		3 V	2.2			2.2			
V_{OL}	I_{OL} = 100 µA		1.65 V to 3.6 V			0.2			0.2	V
	I_{OL} = 4 mA		1.65 V			0.45			0.45	
	I_{OL} = 8 mA		2.3 V			0.7			0.7	
	I_{OL} = 12 mA		2.7 V			0.4			0.4	
	I_{OL} = 24 mA		3 V			0.55			0.55	
I_I	V_I = 0 to 5.5 V		3.6 V			±5			±5	µA
I_{off}	V_I or V_O = 5.5 V		0			±10			±20	µA
I_{OZ}	V_O = 0 to 5.5 V		3.6 V			±10			±20	µA
I_{CC}	V_I = V_{CC} or GND	I_O = 0	3.6 V			10			10	µA
	3.6 V ≤ V_I ≤ 5.5 V(2)					10			10	
ΔI_{CC}	One input at V_{CC} – 0.6 V, Other inputs at V_{CC} or GND		2.7 V to 3.6 V			500			500	µA
C_i	V_I = V_{CC} or GND		3.3 V		4			4		pF
C_o	V_O = V_{CC} or GND		3.3 V		5.5			5.5		pF

(1) All typical values are at V_{CC} = 3.3 V, T_A = 25°C.
(2) This applies in the disabled state only.

7.6 Switching Characteristics, –40°C to 85°C

over recommended operating free-air temperature range (unless otherwise noted) (see Figure 3)

PARAMETER	FROM (INPUT)	TO (OUTPUT)	V_{CC} = 1.8 V ± 0.15 V		V_{CC} = 2.5 V ± 0.2 V		V_{CC} = 2.7 V		V_{CC} = 3.3 V ± 0.3 V		UNIT
			MIN	MAX	MIN	MAX	MIN	MAX	MIN	MAX	
t_{pd}	A	Y		16.4		7.8		7.5	1.3	6.5	ns
t_{en}	$\overline{OE}$	Y		16.5		10.5		9	1.1	8	ns
t_{dis}	$\overline{OE}$	Y		15.9		9		8	1.4	7	ns
$t_{sk(o)}$				1		1		1		1	ns

7.7 Switching Characteristics, –40°C to 125°C

over operating free-air temperature range (unless otherwise noted)

PARAMETER	FROM (INPUT)	TO (OUTPUT)	V_{CC} = 1.8 V ± 0.15 V		V_{CC} = 2.5 V ± 0.2 V		V_{CC} = 2.7 V		V_{CC} = 3.3 V ± 0.3 V		UNIT
			MIN	MAX	MIN	MAX	MIN	MAX	MIN	MAX	
t_{pd}	A	Y		16.4		7.8		7.9	1.3	6.9	ns
t_{en}	$\overline{OE}$	Y		16.5		10.5		9.4	1.1	8.4	ns
t_{dis}	$\overline{OE}$	Y		15.9		9		8.6	1.4	7.6	ns
$t_{sk(o)}$				1		1		1		1	ns

Copyright © 1993–2014, Texas Instruments Incorporated

7.8 Operating Characteristics

T_A = 25°C

PARAMETER			TEST CONDITIONS	V_{CC} = 1.8 V	V_{CC} = 2.5 V	V_{CC} = 3.3 V	UNIT
				TYP	TYP	TYP	
C_{pd}	Power dissipation capacitance	Outputs enabled	f = 10 MHz	127	156	32	pF
		Outputs disabled		8	9	3	

7.9 Typical Characteristics

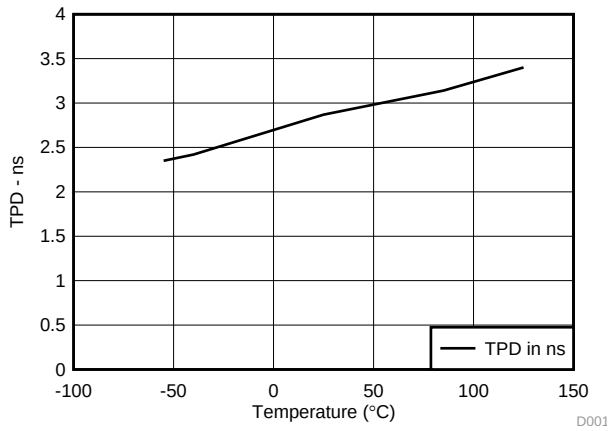

Figure 1. TPD vs Temperature

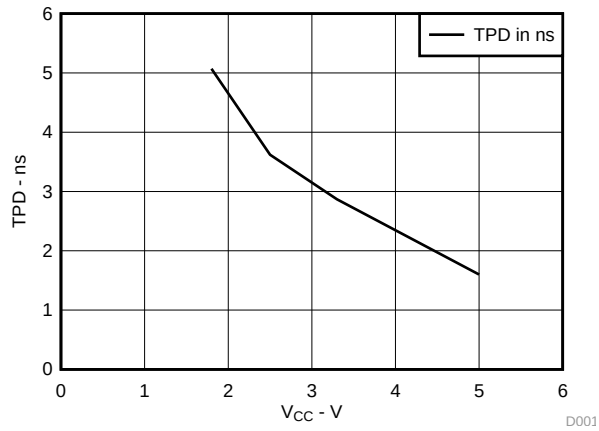

Figure 2. TPD vs V_{CC}

8 Parameter Measurement Information

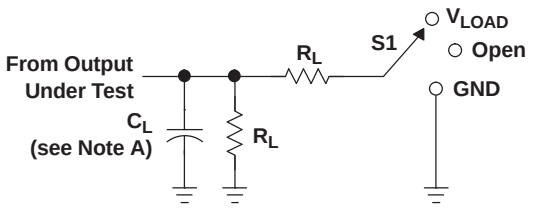

LOAD CIRCUIT

TEST	S1
t_{PLH}/t_{PHL}	Open
t_{PLZ}/t_{PZL}	V_{LOAD}
t_{PHZ}/t_{PZH}	GND

V_{CC}	INPUTS		V_M	V_{LOAD}	C_L	R_L	V_Δ
	V_I	t_r/t_f					
1.8 V ± 0.15 V	V_{CC}	≤2 ns	$V_{CC}/2$	$2 \times V_{CC}$	30 pF	1 kΩ	0.15 V
2.5 V ± 0.2 V	V_{CC}	≤2 ns	$V_{CC}/2$	$2 \times V_{CC}$	30 pF	500 Ω	0.15 V
2.7 V	2.7 V	≤2.5 ns	1.5 V	6 V	50 pF	500 Ω	0.3 V
3.3 V ± 0.3 V	2.7 V	≤2.5 ns	1.5 V	6 V	50 pF	500 Ω	0.3 V

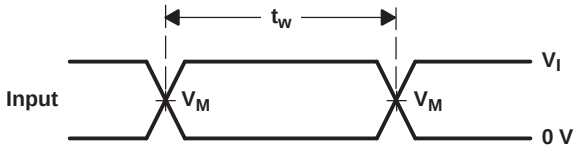

VOLTAGE WAVEFORMS
PULSE DURATION

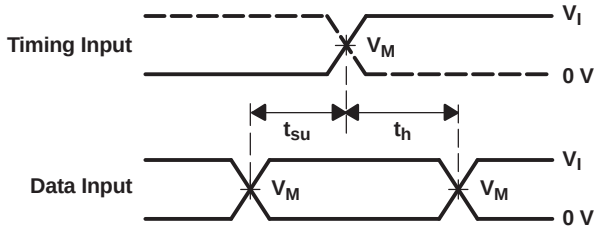

VOLTAGE WAVEFORMS
SETUP AND HOLD TIMES

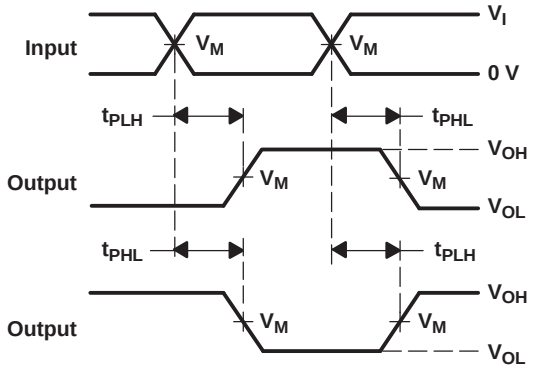

VOLTAGE WAVEFORMS
PROPAGATION DELAY TIMES
INVERTING AND NONINVERTING OUTPUTS

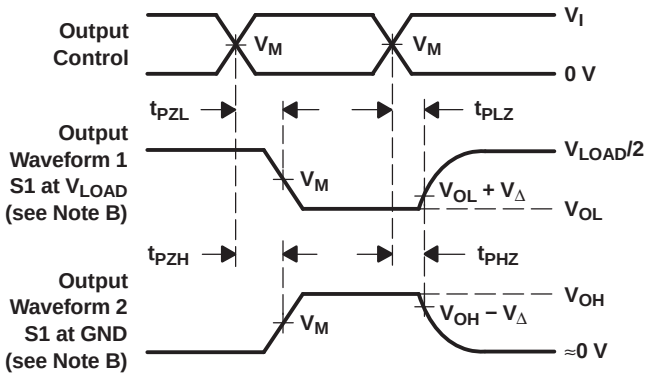

VOLTAGE WAVEFORMS
ENABLE AND DISABLE TIMES
LOW- AND HIGH-LEVEL ENABLING

NOTES:
A. C_L includes probe and jig capacitance.
B. Waveform 1 is for an output with internal conditions such that the output is low, except when disabled by the output control. Waveform 2 is for an output with internal conditions such that the output is high, except when disabled by the output control.
C. All input pulses are supplied by generators having the following characteristics: PRR ≤ 10 MHz, Z_O = 50 Ω.
D. The outputs are measured one at a time, with one transition per measurement.
E. t_{PLZ} and t_{PHZ} are the same as t_{dis}.
F. t_{PZL} and t_{PZH} are the same as t_{en}.
G. t_{PLH} and t_{PHL} are the same as t_{pd}.
H. All parameters and waveforms are not applicable to all devices.

Figure 3. Load Circuit and Voltage Waveforms

Copyright © 1993–2014, Texas Instruments Incorporated

9 Detailed Description

9.1 Overview

This device is organized as two 4-bit buffers/drivers with separate output-enable ($\overline{OE}$) inputs. When $\overline{OE}$ is low, the device passes data from the A inputs to the Y outputs. When $\overline{OE}$ is high, the outputs are in the high-impedance state.

Inputs can be driven from either 3.3-V or 5-V devices. This feature allows the use of this device as a translator in a mixed 3.3-V/5-V system environment.

To ensure the high-impedance state during power up or power down, $\overline{OE}$ should be tied to V_{CC} through a pullup resistor; the minimum value of the resistor is determined by the current-sinking capability of the driver.

This device is fully specified for partial-power-down applications using I_{off}. The I_{off} circuitry disables the outputs, preventing damaging current backflow through the device when it is powered down.

9.2 Functional Block Diagram

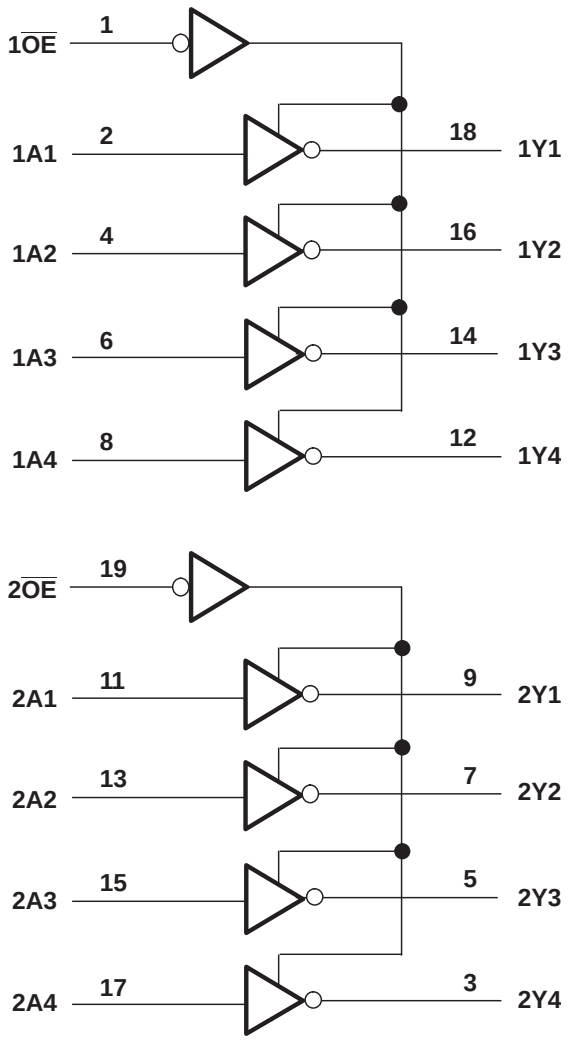

9.3 Feature Description

- Wide operating voltage range from 1.65 V to 3.6 V
- Allows down voltage translation
- Inputs accept voltages to 5.5 V
- I_{off} feature allows voltages on the inputs and outputs when V_{CC} is 0 V

9.4 Device Functional Modes

Table 1. Function Table (Each 4-Bit Buffer)

INPUTS		OUTPUT
$\overline{OE}$	A	Y
L	H	L
L	L	H
H	X	Z

Copyright © 1993–2014, Texas Instruments Incorporated

10 Application and Implementation

10.1 Application Information

The SN74LVC240A device is a high drive CMOS device that can be used for a multitude of bus-interface type applications where the data needs to be retained or latched. It can produce 24 mA of drive current at 3.3 V making it ideal for driving multiple outputs and also good for high-speed applications up to 100 Mhz. The inputs are 5.5 V tolerant allowing it to translate down to V_{CC}.

10.2 Typical Application

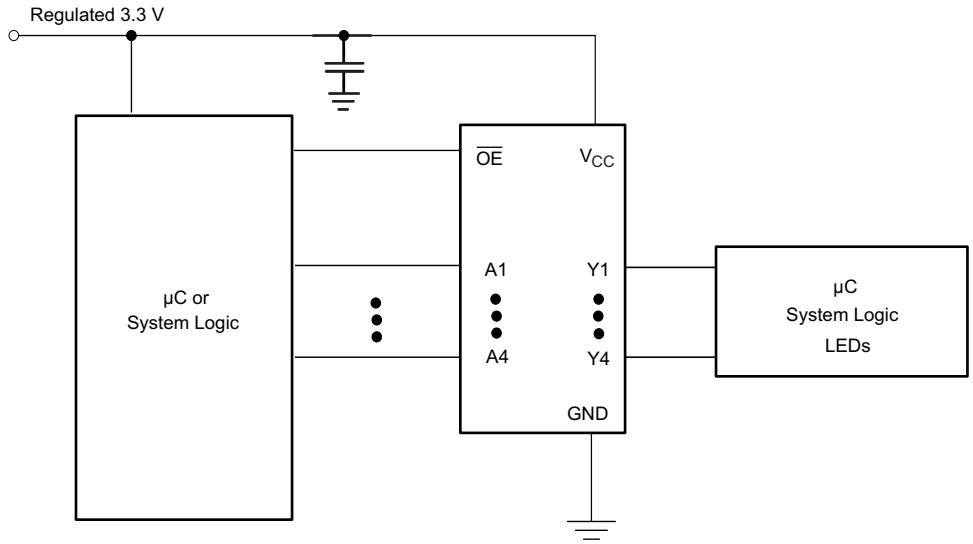

Figure 4. Typical Application Diagram

10.2.1 Design Requirements

This device uses CMOS technology and has balanced output drive. Care should be taken to avoid bus contention because it can drive currents that would exceed maximum limits. The high drive will also create fast edges into light loads; therefore, routing and load conditions should be considered to prevent ringing.

10.2.2 Detailed Design Procedure

1. Recommended Input Conditions
   - Rise time and fall time specs: See (Δt/ΔV) in the *Recommended Operating Conditions* table.
   - Specified high and low levels: See (V_{IH} and V_{IL}) in the *Recommended Operating Conditions* table.
   - Inputs are overvoltage tolerant allowing them to go as high as 5.5 V at any valid V_{CC}.
2. Recommend Output Conditions
   - Load currents should not exceed 25 mA per output and 50 mA total for the part.
   - Outputs should not be pulled above V_{CC}.

Typical Application (continued)

10.2.3 Application Curves

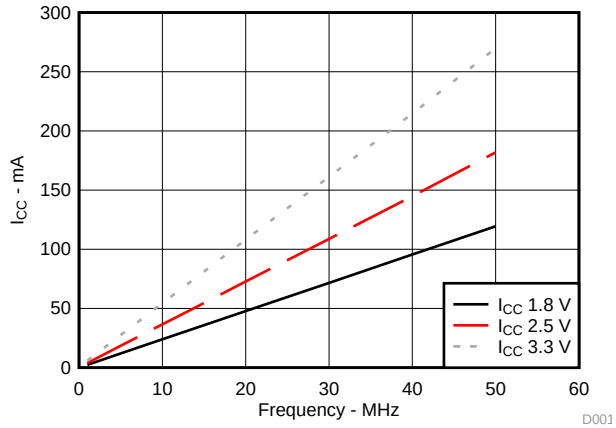

Figure 5. I_{CC} vs Frequency

11 Power Supply Recommendations

The power supply can be any voltage between the MIN and MAX supply voltage rating located in the *Recommended Operating Conditions* table.

Each V_{CC} pin should have a good bypass capacitor to prevent power disturbance. For devices with a single supply, 0.1 µf is recommended; if there are multiple V_{CC} pins, then 0.01 µf or 0.022 µf is recommended for each power pin. It is acceptable to parallel multiple bypass caps to reject different frequencies of noise. A 0.1 µf and a 1 µf are commonly used in parallel. The bypass capacitor should be installed as close to the power pin as possible for best results.

12 Layout

12.1 Layout Guidelines

When using multiple-bit logic devices, inputs should never float.

In many cases, functions or parts of functions of digital logic devices are unused, for example, when only two inputs of a triple-input AND gate are used or only 3 of the 4 buffer gates are used. Such input pins should not be left unconnected because the undefined voltages at the outside connections result in undefined operational states. Figure 6 specifies the rules that must be observed under all circumstances. All unused inputs of digital logic devices must be connected to a high or low bias to prevent them from floating. The logic level that should be applied to any particular unused input depends on the function of the device. Generally they will be tied to GND or V_{CC}, whichever makes more sense or is more convenient. It is generally acceptable to float outputs, unless the part is a transceiver. If the transceiver has an output enable pin, it will disable the output section of the part when asserted. This will not disable the input section of the IOs, so they cannot float when disabled.

12.2 Layout Example

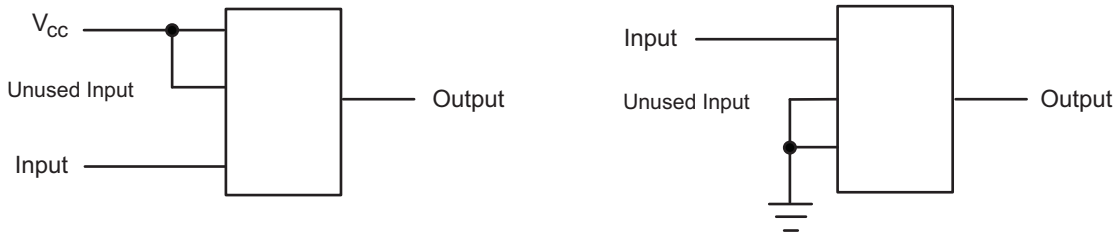

Figure 6. Layout Diagram

Copyright © 1993–2014, Texas Instruments Incorporated

13 Device and Documentation Support

13.1 Trademarks

All trademarks are the property of their respective owners.

13.2 Electrostatic Discharge Caution

These devices have limited built-in ESD protection. The leads should be shorted together or the device placed in conductive foam during storage or handling to prevent electrostatic damage to the MOS gates.

13.3 Glossary

SLYZ022 — *TI Glossary*.

This glossary lists and explains terms, acronyms, and definitions.

14 Mechanical, Packaging, and Orderable Information

The following pages include mechanical, packaging, and orderable information. This information is the most current data available for the designated devices. This data is subject to change without notice and revision of this document. For browser-based versions of this data sheet, refer to the left-hand navigation.

PACKAGING INFORMATION

Orderable Device	Status (1)	Package Type	Package Drawing	Pins	Package Qty	Eco Plan (2)	Lead/Ball Finish (6)	MSL Peak Temp (3)	Op Temp (°C)	Device Marking (4/5)	Samples
SN74LVC240ADBR	ACTIVE	SSOP	DB	20	2000	Green (RoHS & no Sb/Br)	CU NIPDAU	Level-1-260C-UNLIM	-40 to 125	LC240A	Samples
SN74LVC240ADGVR	ACTIVE	TVSOP	DGV	20	2000	Green (RoHS & no Sb/Br)	CU NIPDAU	Level-1-260C-UNLIM	-40 to 125	LC240A	Samples
SN74LVC240ADW	ACTIVE	SOIC	DW	20	25	Green (RoHS & no Sb/Br)	CU NIPDAU	Level-1-260C-UNLIM	-40 to 125	LVC240A	Samples
SN74LVC240ADWR	ACTIVE	SOIC	DW	20	2000	Green (RoHS & no Sb/Br)	CU NIPDAU	Level-1-260C-UNLIM	-40 to 125	LVC240A	Samples
SN74LVC240ANSR	ACTIVE	SO	NS	20	2000	Green (RoHS & no Sb/Br)	CU NIPDAU	Level-1-260C-UNLIM	-40 to 125	LVC240A	Samples
SN74LVC240APW	ACTIVE	TSSOP	PW	20	70	Green (RoHS & no Sb/Br)	CU NIPDAU	Level-1-260C-UNLIM	-40 to 125	LC240A	Samples
SN74LVC240APWG4	ACTIVE	TSSOP	PW	20	70	Green (RoHS & no Sb/Br)	CU NIPDAU	Level-1-260C-UNLIM	-40 to 125	LC240A	Samples
SN74LVC240APWR	ACTIVE	TSSOP	PW	20	2000	Green (RoHS & no Sb/Br)	CU NIPDAU | CU SN	Level-1-260C-UNLIM	-40 to 125	LC240A	Samples
SN74LVC240APWRE4	ACTIVE	TSSOP	PW	20	2000	Green (RoHS & no Sb/Br)	CU NIPDAU	Level-1-260C-UNLIM	-40 to 125	LC240A	Samples
SN74LVC240APWRG4	ACTIVE	TSSOP	PW	20	2000	Green (RoHS & no Sb/Br)	CU NIPDAU	Level-1-260C-UNLIM	-40 to 125	LC240A	Samples
SN74LVC240APWT	ACTIVE	TSSOP	PW	20	250	Green (RoHS & no Sb/Br)	CU NIPDAU	Level-1-260C-UNLIM	-40 to 125	LC240A	Samples

(1) The marketing status values are defined as follows:
ACTIVE: Product device recommended for new designs.
LIFEBUY: TI has announced that the device will be discontinued, and a lifetime-buy period is in effect.
NRND: Not recommended for new designs. Device is in production to support existing customers, but TI does not recommend using this part in a new design.
PREVIEW: Device has been announced but is not in production. Samples may or may not be available.
OBSOLETE: TI has discontinued the production of the device.

(2) **RoHS:** TI defines "RoHS" to mean semiconductor products that are compliant with the current EU RoHS requirements for all 10 RoHS substances, including the requirement that RoHS substance do not exceed 0.1% by weight in homogeneous materials. Where designed to be soldered at high temperatures, "RoHS" products are suitable for use in specified lead-free processes. TI may reference these types of products as "Pb-Free".
RoHS Exempt: TI defines "RoHS Exempt" to mean products that contain lead but are compliant with EU RoHS pursuant to a specific EU RoHS exemption.
Green: TI defines "Green" to mean the content of Chlorine (Cl) and Bromine (Br) based flame retardants meet JS709B low halogen requirements of <=1000ppm threshold. Antimony trioxide based flame retardants must also meet the <=1000ppm threshold requirement.

(3) MSL, Peak Temp. - The Moisture Sensitivity Level rating according to the JEDEC industry standard classifications, and peak solder temperature.

(4) There may be additional marking, which relates to the logo, the lot trace code information, or the environmental category on the device.

(5) Multiple Device Markings will be inside parentheses. Only one Device Marking contained in parentheses and separated by a "~" will appear on a device. If a line is indented then it is a continuation of the previous line and the two combined represent the entire Device Marking for that device.

(6) Lead/Ball Finish - Orderable Devices may have multiple material finish options. Finish options are separated by a vertical ruled line. Lead/Ball Finish values may wrap to two lines if the finish value exceeds the maximum column width.

Important Information and Disclaimer: The information provided on this page represents TI's knowledge and belief as of the date that it is provided. TI bases its knowledge and belief on information provided by third parties, and makes no representation or warranty as to the accuracy of such information. Efforts are underway to better integrate information from third parties. TI has taken and continues to take reasonable steps to provide representative and accurate information but may not have conducted destructive testing or chemical analysis on incoming materials and chemicals. TI and TI suppliers consider certain information to be proprietary, and thus CAS numbers and other limited information may not be available for release.

In no event shall TI's liability arising out of such information exceed the total purchase price of the TI part(s) at issue in this document sold by TI to Customer on an annual basis.

TAPE AND REEL INFORMATION

REEL DIMENSIONS

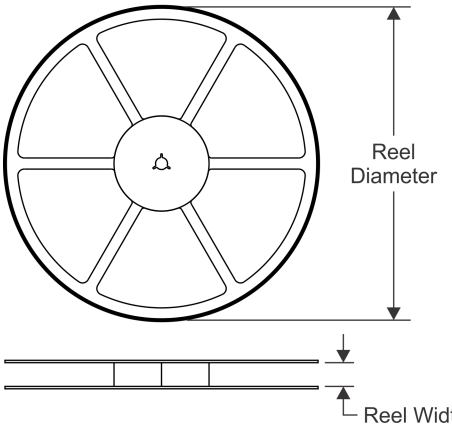

TAPE DIMENSIONS

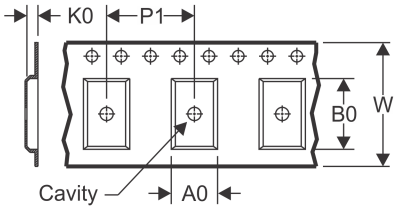

A0	Dimension designed to accommodate the component width
B0	Dimension designed to accommodate the component length
K0	Dimension designed to accommodate the component thickness
W	Overall width of the carrier tape
P1	Pitch between successive cavity centers

QUADRANT ASSIGNMENTS FOR PIN 1 ORIENTATION IN TAPE

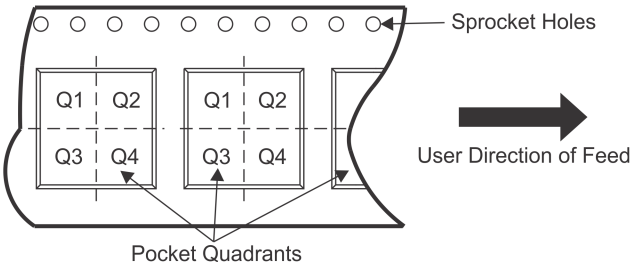

*All dimensions are nominal

Device	Package Type	Package Drawing	Pins	SPQ	Reel Diameter (mm)	Reel Width W1 (mm)	A0 (mm)	B0 (mm)	K0 (mm)	P1 (mm)	W (mm)	Pin1 Quadrant
SN74LVC240ADBR	SSOP	DB	20	2000	330.0	16.4	8.2	7.5	2.5	12.0	16.0	Q1
SN74LVC240ADGVR	TVSOP	DGV	20	2000	330.0	12.4	6.9	5.6	1.6	8.0	12.0	Q1
SN74LVC240ADWR	SOIC	DW	20	2000	330.0	24.4	10.8	13.3	2.7	12.0	24.0	Q1
SN74LVC240ANSR	SO	NS	20	2000	330.0	24.4	8.4	13.0	2.5	12.0	24.0	Q1
SN74LVC240APWR	TSSOP	PW	20	2000	330.0	16.4	6.95	7.1	1.6	8.0	16.0	Q1
SN74LVC240APWR	TSSOP	PW	20	2000	330.0	16.4	6.95	7.1	1.6	8.0	16.0	Q1
SN74LVC240APWT	TSSOP	PW	20	250	330.0	16.4	6.95	7.1	1.6	8.0	16.0	Q1

TAPE AND REEL BOX DIMENSIONS

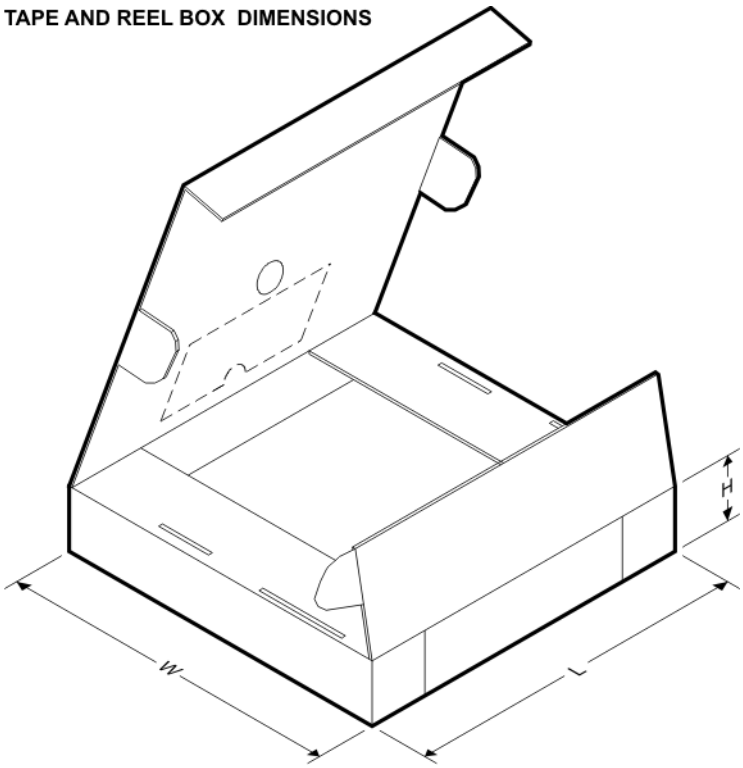

*All dimensions are nominal

Device	Package Type	Package Drawing	Pins	SPQ	Length (mm)	Width (mm)	Height (mm)
SN74LVC240ADBR	SSOP	DB	20	2000	367.0	367.0	38.0
SN74LVC240ADGVR	TVSOP	DGV	20	2000	367.0	367.0	35.0
SN74LVC240ADWR	SOIC	DW	20	2000	367.0	367.0	45.0
SN74LVC240ANSR	SO	NS	20	2000	367.0	367.0	45.0
SN74LVC240APWR	TSSOP	PW	20	2000	367.0	367.0	38.0
SN74LVC240APWR	TSSOP	PW	20	2000	364.0	364.0	27.0
SN74LVC240APWT	TSSOP	PW	20	250	367.0	367.0	38.0

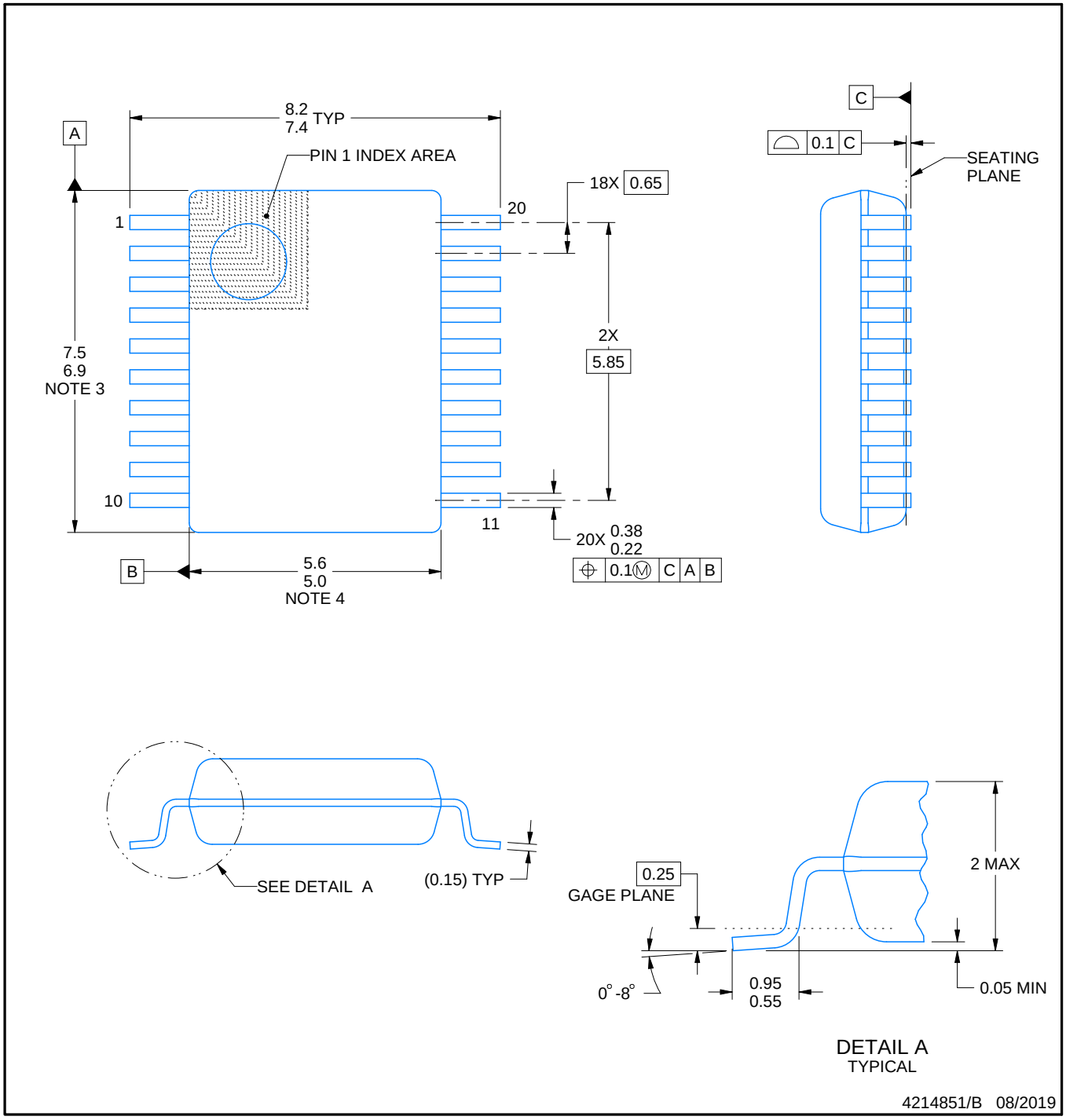

NOTES:

1. All linear dimensions are in millimeters. Any dimensions in parenthesis are for reference only. Dimensioning and tolerancing per ASME Y14.5M.
2. This drawing is subject to change without notice.
3. This dimension does not include mold flash, protrusions, or gate burrs. Mold flash, protrusions, or gate burrs shall not exceed 0.15 mm per side.
4. This dimension does not include interlead flash. Interlead flash shall not exceed 0.25 mm per side.
5. Reference JEDEC registration MO-150.

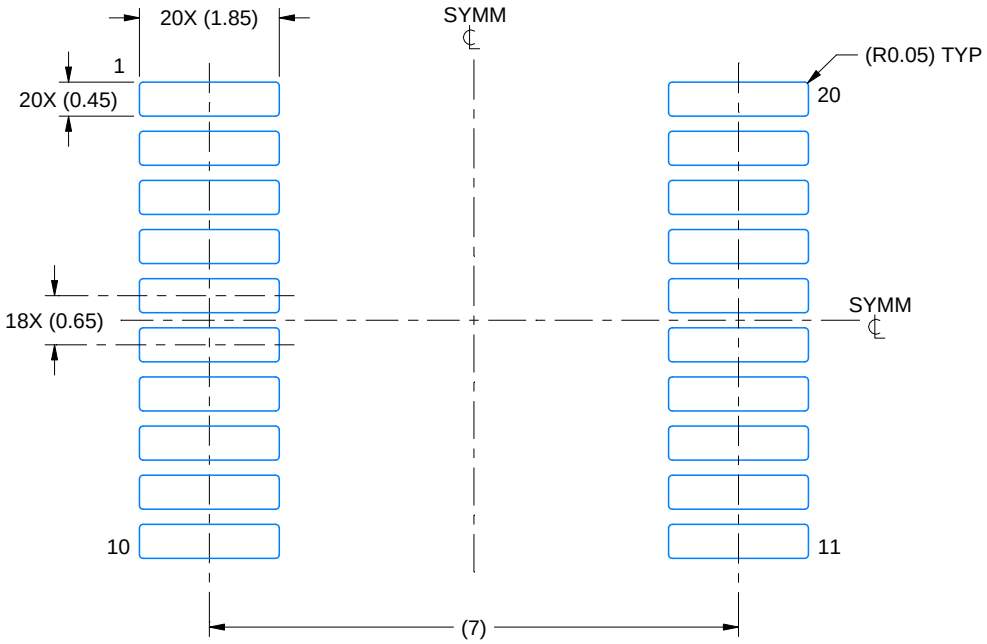

LAND PATTERN EXAMPLE
EXPOSED METAL SHOWN
SCALE: 10X

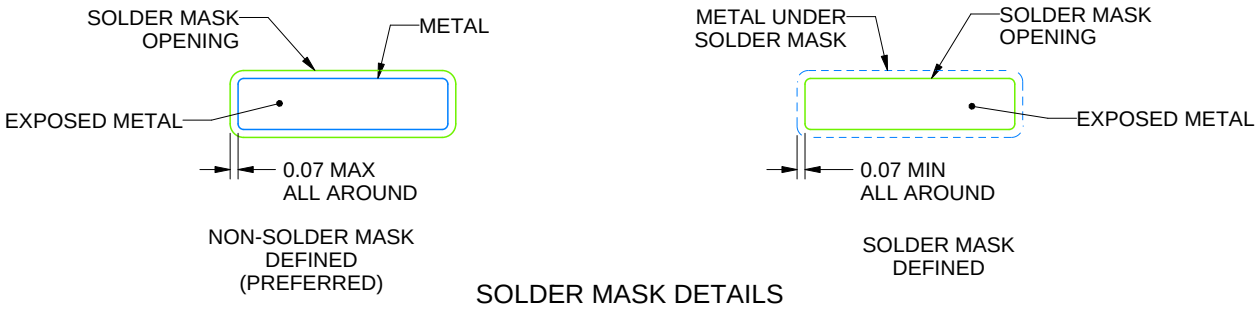

SOLDER MASK DETAILS

4214851/B 08/2019

NOTES: (continued)

6. Publication IPC-7351 may have alternate designs.
7. Solder mask tolerances between and around signal pads can vary based on board fabrication site.

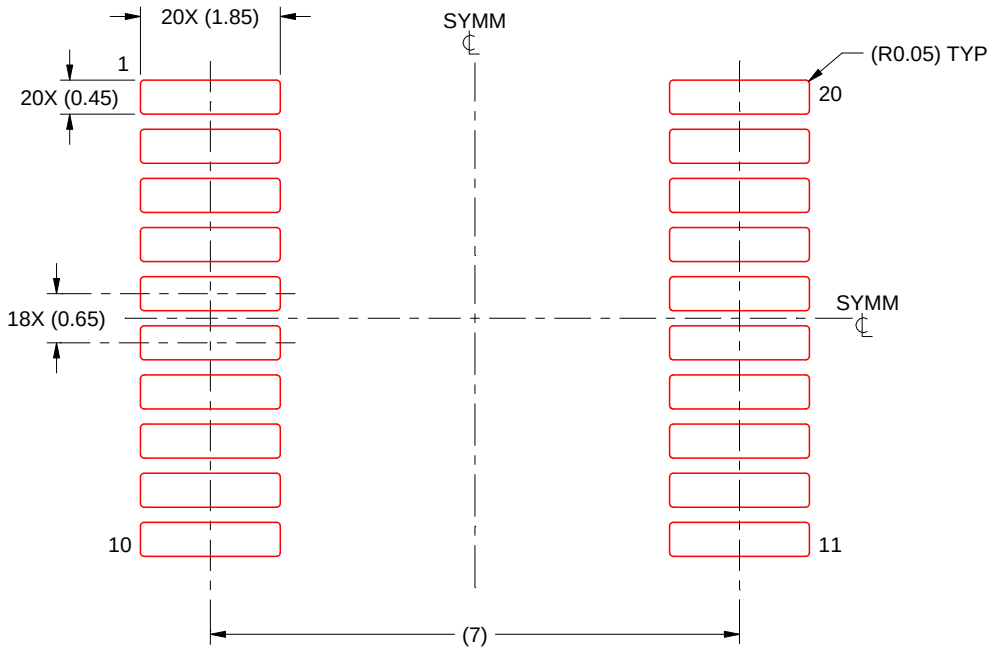

SOLDER PASTE EXAMPLE
BASED ON 0.125 mm THICK STENCIL
SCALE: 10X

4214851/B 08/2019

NOTES: (continued)

8. Laser cutting apertures with trapezoidal walls and rounded corners may offer better paste release. IPC-7525 may have alternate design recommendations.
9. Board assembly site may have different recommendations for stencil design.

MECHANICAL DATA

NS (R-PDSO-G)** **PLASTIC SMALL-OUTLINE PACKAGE**

14-PINS SHOWN

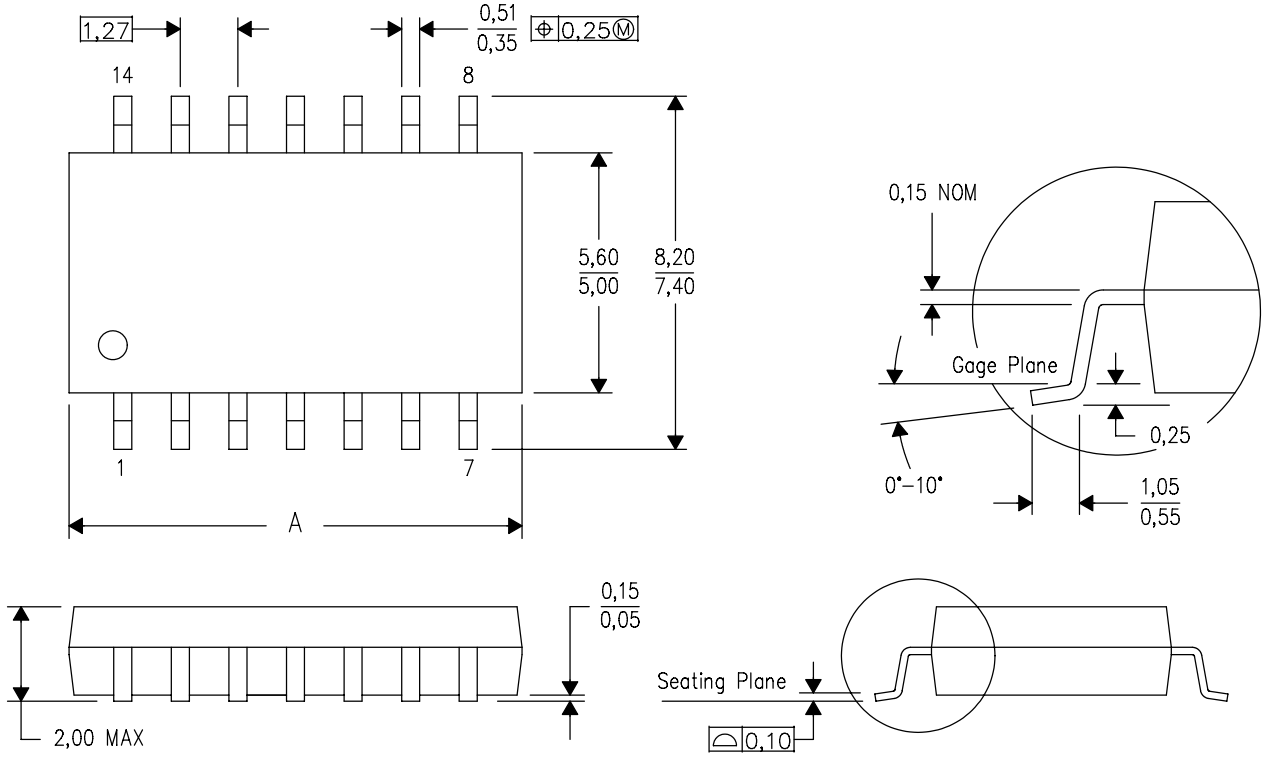

DIM \ PINS **	14	16	20	24
A MAX	10,50	10,50	12,90	15,30
A MIN	9,90	9,90	12,30	14,70

4040062/C 03/03

NOTES:
A. All linear dimensions are in millimeters.
B. This drawing is subject to change without notice.
C. Body dimensions do not include mold flash or protrusion, not to exceed 0,15.

DGV (R-PDSO-G)** **PLASTIC SMALL-OUTLINE**

24 PINS SHOWN

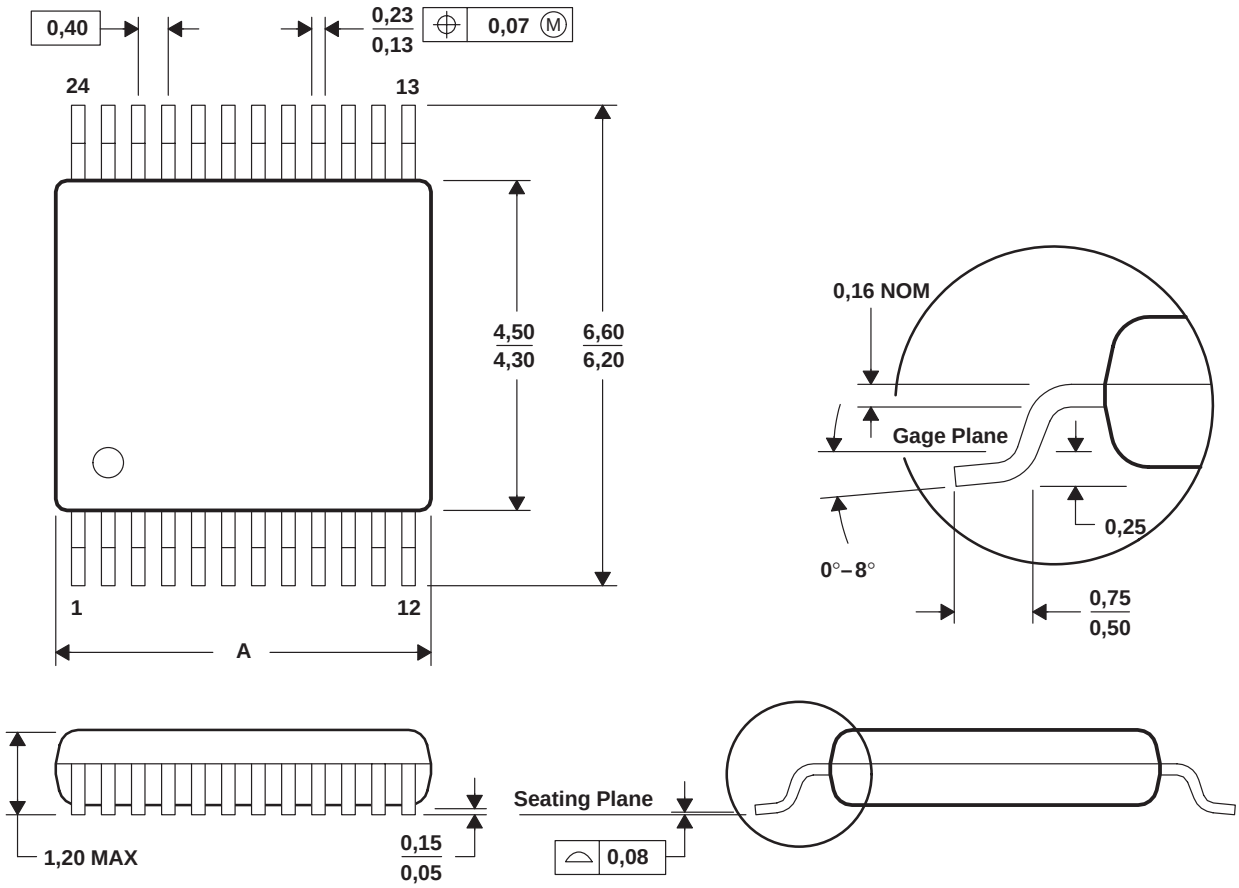

DIM \ PINS **	14	16	20	24	38	48	56
A MAX	3,70	3,70	5,10	5,10	7,90	9,80	11,40
A MIN	3,50	3,50	4,90	4,90	7,70	9,60	11,20

4073251/E 08/00

NOTES: A. All linear dimensions are in millimeters.
B. This drawing is subject to change without notice.
C. Body dimensions do not include mold flash or protrusion, not to exceed 0,15 per side.
D. Falls within JEDEC: 24/48 Pins – MO-153
14/16/20/56 Pins – MO-194

PW (R-PDSO-G20) PLASTIC SMALL OUTLINE

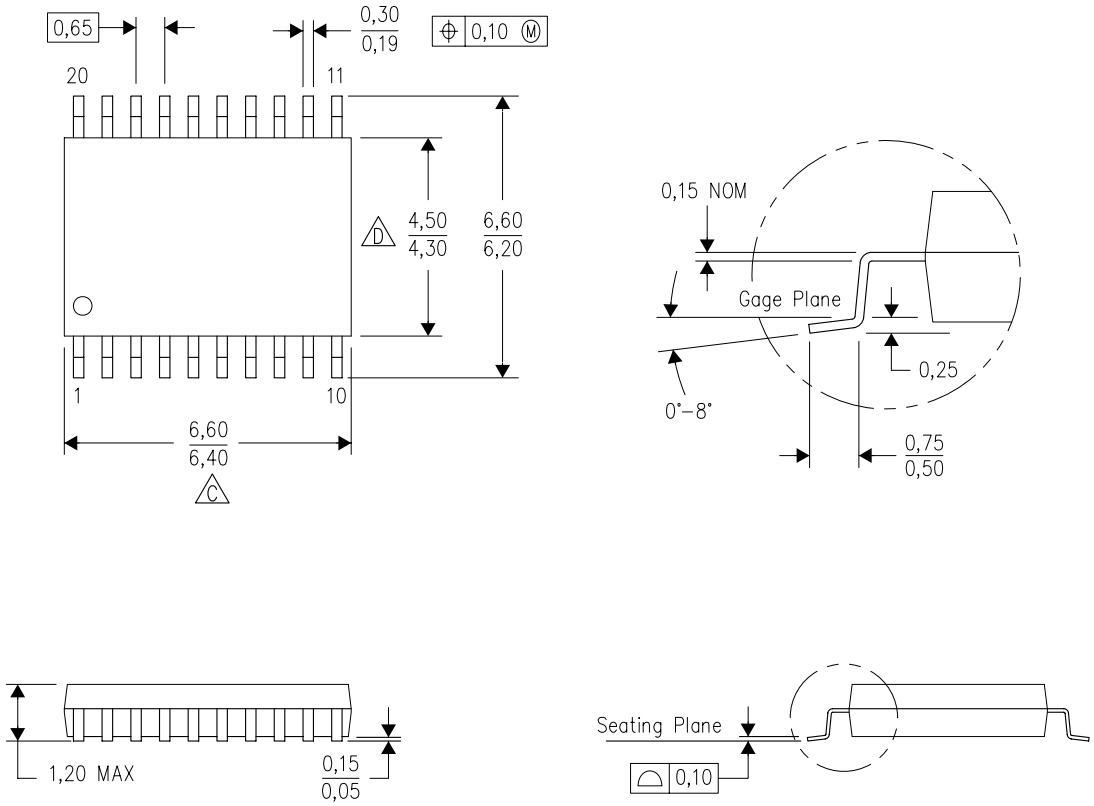

4040064-5/G 02/11

NOTES:
A. All linear dimensions are in millimeters. Dimensioning and tolerancing per ASME Y14.5M-1994.
B. This drawing is subject to change without notice.
C. Body length does not include mold flash, protrusions, or gate burrs. Mold flash, protrusions, or gate burrs shall not exceed 0,15 each side.
D. Body width does not include interlead flash. Interlead flash shall not exceed 0,25 each side.
E. Falls within JEDEC MO-153

PW (R–PDSO–G20) PLASTIC SMALL OUTLINE

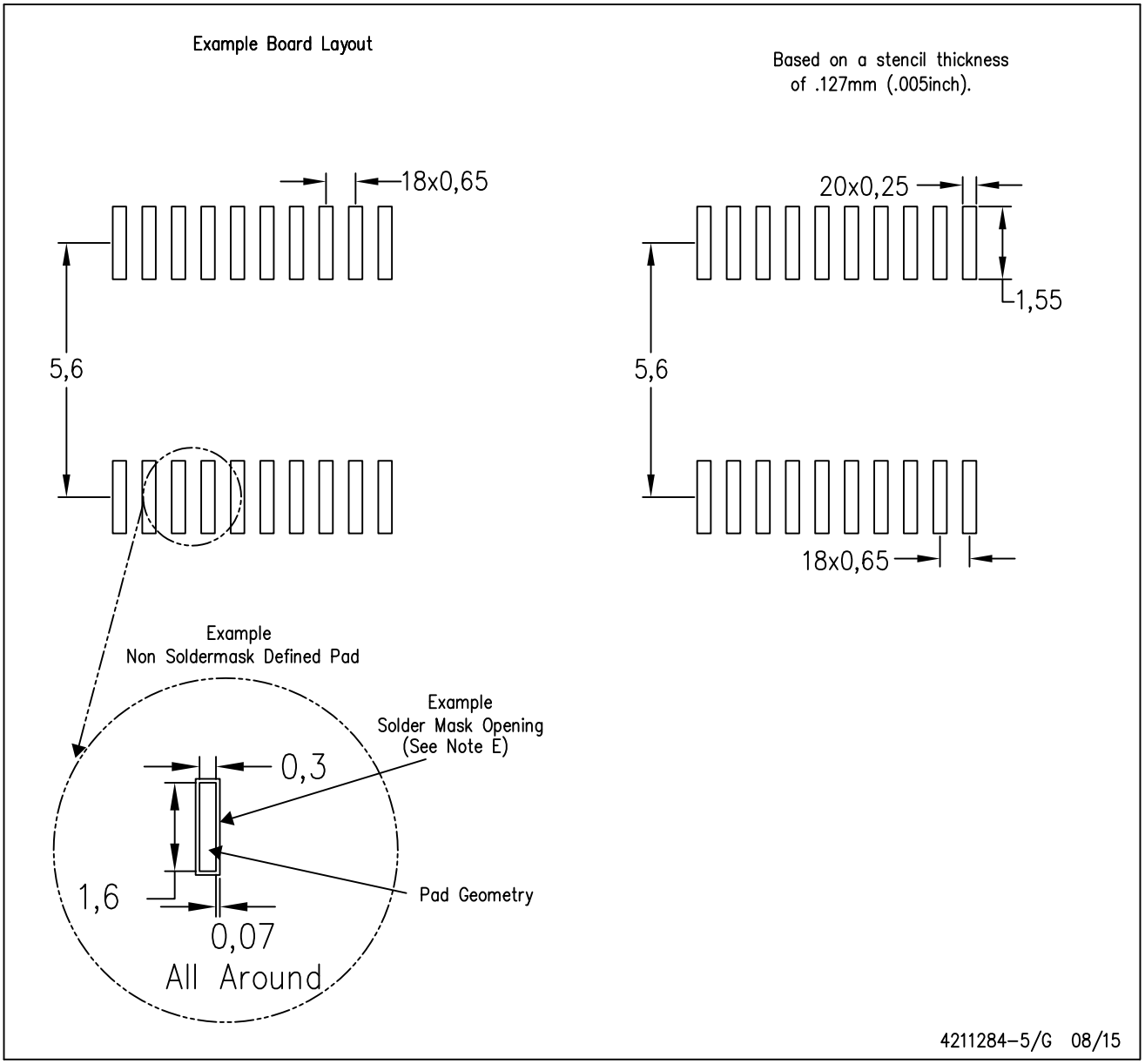

NOTES:
A. All linear dimensions are in millimeters.
B. This drawing is subject to change without notice.
C. Publication IPC–7351 is recommended for alternate design.
D. Laser cutting apertures with trapezoidal walls and also rounding corners will offer better paste release. Customers should contact their board assembly site for stencil design recommendations. Refer to IPC–7525 for other stencil recommendations.
E. Customers should contact their board fabrication site for solder mask tolerances between and around signal pads.

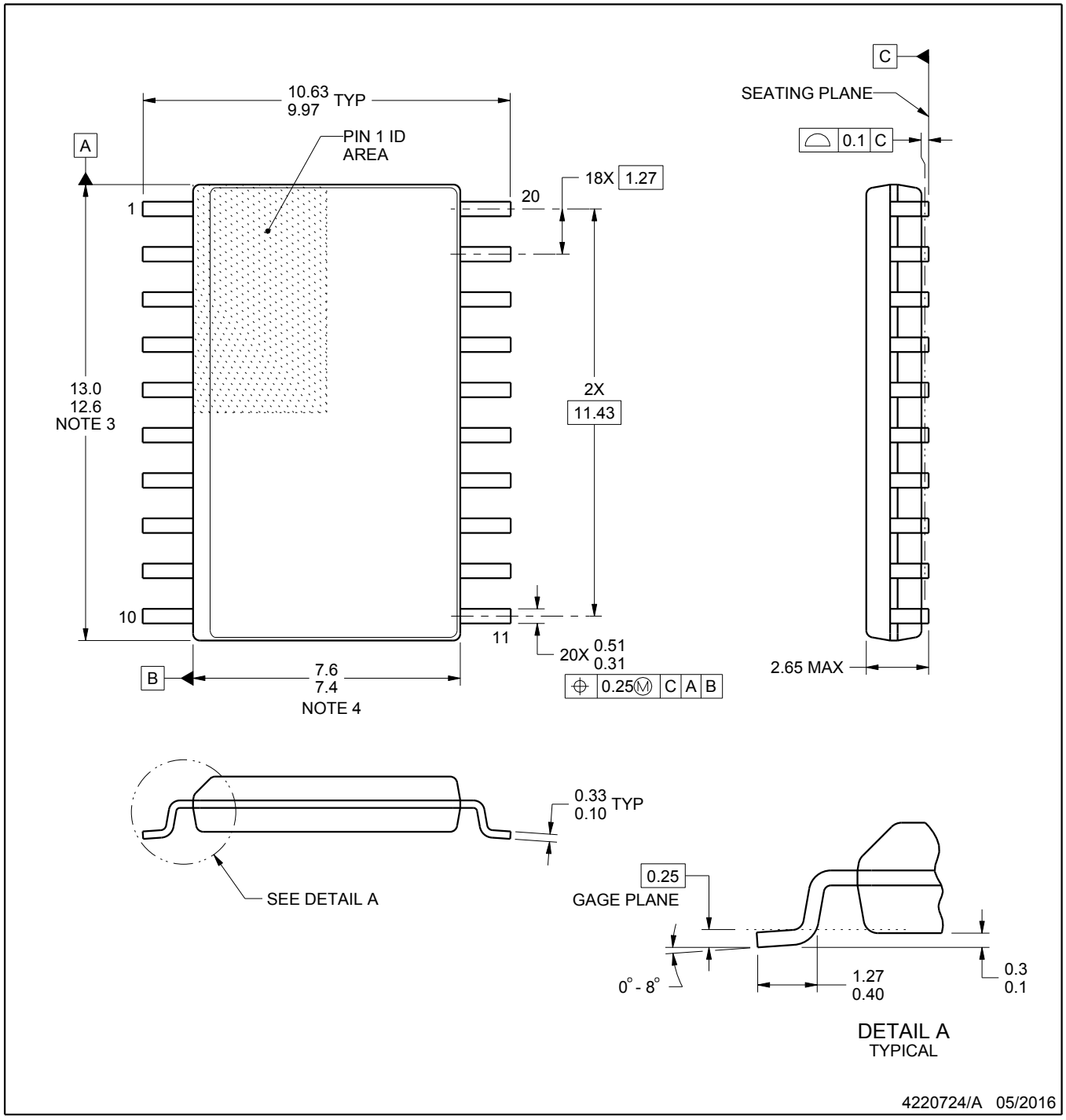

NOTES:

1. All linear dimensions are in millimeters. Dimensions in parenthesis are for reference only. Dimensioning and tolerancing per ASME Y14.5M.
2. This drawing is subject to change without notice.
3. This dimension does not include mold flash, protrusions, or gate burrs. Mold flash, protrusions, or gate burrs shall not exceed 0.15 mm per side.
4. This dimension does not include interlead flash. Interlead flash shall not exceed 0.43 mm per side.
5. Reference JEDEC registration MS-013.

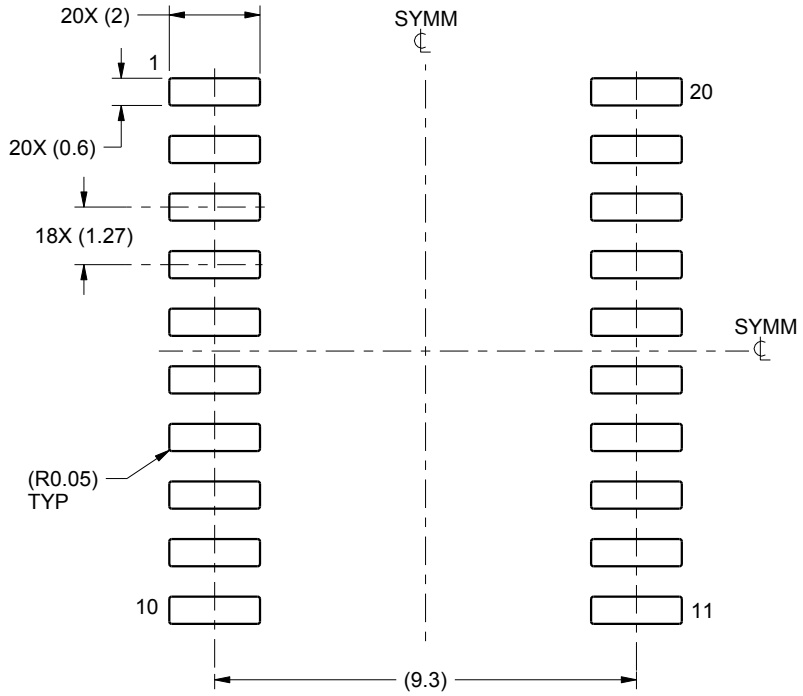

LAND PATTERN EXAMPLE
SCALE:6X

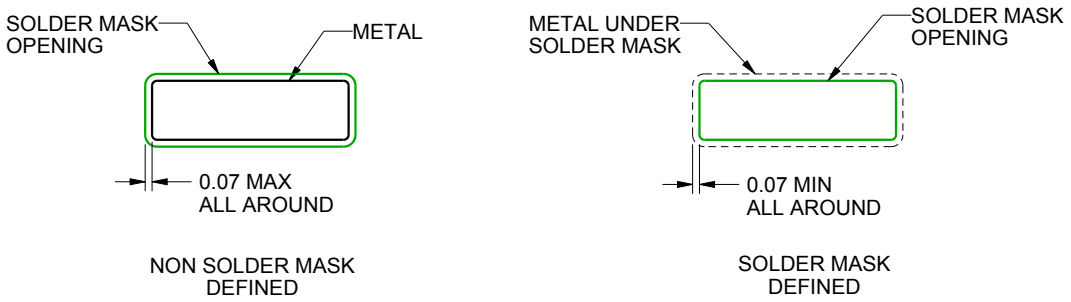

SOLDER MASK DETAILS

4220724/A 05/2016

NOTES: (continued)

6. Publication IPC-7351 may have alternate designs.
7. Solder mask tolerances between and around signal pads can vary based on board fabrication site.

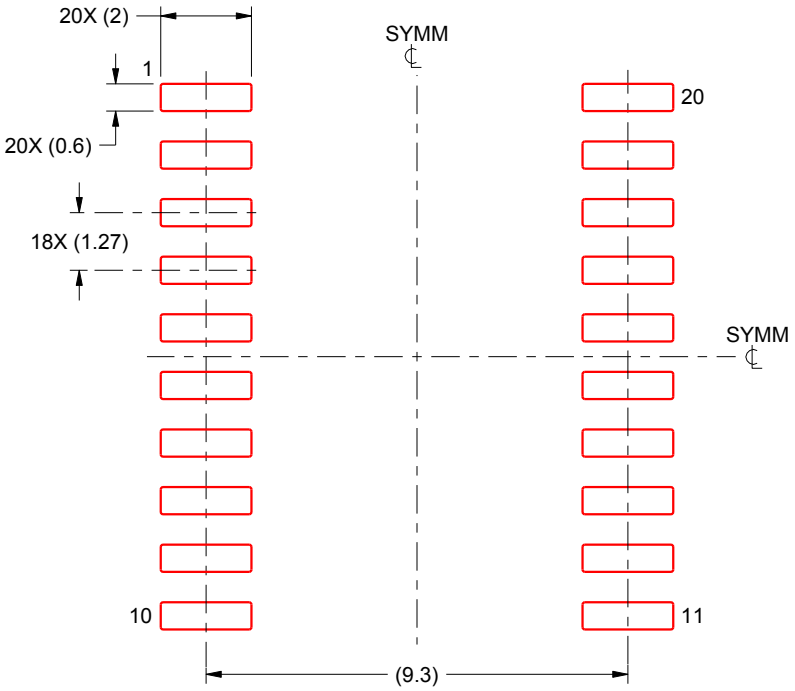

SOLDER PASTE EXAMPLE
BASED ON 0.125 mm THICK STENCIL
SCALE:6X

4220724/A 05/2016

NOTES: (continued)

8. Laser cutting apertures with trapezoidal walls and rounded corners may offer better paste release. IPC-7525 may have alternate design recommendations.
9. Board assembly site may have different recommendations for stencil design.

IMPORTANT NOTICE AND DISCLAIMER

TI PROVIDES TECHNICAL AND RELIABILITY DATA (INCLUDING DATASHEETS), DESIGN RESOURCES (INCLUDING REFERENCE DESIGNS), APPLICATION OR OTHER DESIGN ADVICE, WEB TOOLS, SAFETY INFORMATION, AND OTHER RESOURCES “AS IS” AND WITH ALL FAULTS, AND DISCLAIMS ALL WARRANTIES, EXPRESS AND IMPLIED, INCLUDING WITHOUT LIMITATION ANY IMPLIED WARRANTIES OF MERCHANTABILITY, FITNESS FOR A PARTICULAR PURPOSE OR NON-INFRINGEMENT OF THIRD PARTY INTELLECTUAL PROPERTY RIGHTS.

These resources are intended for skilled developers designing with TI products. You are solely responsible for (1) selecting the appropriate TI products for your application, (2) designing, validating and testing your application, and (3) ensuring your application meets applicable standards, and any other safety, security, or other requirements. These resources are subject to change without notice. TI grants you permission to use these resources only for development of an application that uses the TI products described in the resource. Other reproduction and display of these resources is prohibited. No license is granted to any other TI intellectual property right or to any third party intellectual property right. TI disclaims responsibility for, and you will fully indemnify TI and its representatives against, any claims, damages, costs, losses, and liabilities arising out of your use of these resources.

TI’s products are provided subject to TI’s Terms of Sale (www.ti.com/legal/termsofsale.html) or other applicable terms available either on ti.com or provided in conjunction with such TI products. TI’s provision of these resources does not expand or otherwise alter TI’s applicable warranties or warranty disclaimers for TI products.

Mailing Address: Texas Instruments, Post Office Box 655303, Dallas, Texas 75265
Copyright © 2019, Texas Instruments Incorporated