SINGLE-SUPPLY VOLTAGE-LEVEL TRANSLATOR WITH NINE CONFIGURABLE GATE LOGIC FUNCTIONS

Check for Samples: SN74AUP1T97

FEATURES

- **Available in the Texas Instruments NanoStar™ Packages**
- **Single-Supply Voltage Translator**
- **1.8 V to 3.3 V (at V_{CC} = 3.3 V)**
- **2.5 V to 3.3 V (at V_{CC} = 3.3 V)**
- **1.8 V to 2.5 V (at V_{CC} = 2.5 V)**
- **3.3 V to 2.5 V (at V_{CC} = 2.5 V)**
- **Nine Configurable Gate Logic Functions**
- **Schmitt-Trigger Inputs Reject Input Noise and Provide Better Output Signal Integrity**
- **I_{off} Supports Partial-Power-Down Mode With Low Leakage Current (0.5 µA)**
- **Very Low Static and Dynamic Power Consumption**
- **Pb-Free Packages Available: SON (DRY or DSF), SOT-23 (DBV), SC-70 (DCK), and NanoStar WCSP**
- **Latch-Up Performance Exceeds 100 mA Per JESD 78, Class II**
- **ESD Performance Tested Per JESD 22**
  - **2000-V Human-Body Model (A114-B, Class II)**
  - **1000-V Charged-Device Model (C101)**
- **Related Devices: SN74AUP1T98, SN74AUP1T57, and SN74AUP1T58**

DBV OR DCK PACKAGE (TOP VIEW)

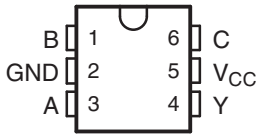

DRY OR DSF PACKAGE (TOP VIEW)

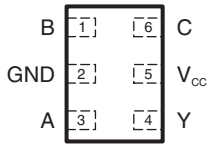

YFP OR YZP PACKAGE (TOP VIEW)

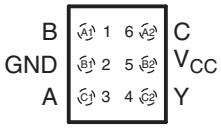

DESCRIPTION/ORDERING INFORMATION

AUP technology is the industry's lowest-power logic technology designed for use in battery-operated or battery backed-up equipment. The SN74AUP1T97 is designed for logic-level translation applications with input switching levels that accept 1.8-V LVCMOS signals, while operating from either a single 3.3-V or 2.5-V V_{CC} supply.

The wide V_{CC} range of 2.3 V to 3.6 V allows the possibility of battery voltage drop during system operation and ensures normal operation between this range.

Schmitt-trigger inputs (ΔV_T = 210 mV between positive and negative input transitions) offer improved noise immunity during switching transitions, which is especially useful on analog mixed-mode designs. Schmitt-trigger inputs reject input noise, ensure integrity of output signals, and allow for slow input signal transition.

The SN74AUP1T97 can be easily configured to perform a required gate function by connecting A, B, and C inputs to V_{CC} or ground (see Function Selection table). Up to nine commonly used logic gate functions can be performed.

Please be aware that an important notice concerning availability, standard warranty, and use in critical applications of Texas Instruments semiconductor products and disclaimers thereto appears at the end of this data sheet.

NanoStar is a trademark of Texas Instruments.

PRODUCTION DATA information is current as of publication date. Products conform to specifications per the terms of the Texas Instruments standard warranty. Production processing does not necessarily include testing of all parameters.

Copyright © 2004–2010, Texas Instruments Incorporated

I_{off} is a feature that allows for powered-down conditions (V_{CC} = 0 V) and is important in portable and mobile applications. When V_{CC} = 0 V, signals in the range from 0 V to 3.6 V can be applied to the inputs and outputs of the device. No damage occurs to the device under these conditions.

The SN74AUP1T97 is designed with optimized current-drive capability of 4 mA to reduce line reflections, overshoot, and undershoot caused by high-drive outputs.

NanoStar package technology is a major breakthrough in IC packaging concepts, using the die as the package.

ORDERING INFORMATION(1)

T_A	PACKAGE(2)		ORDERABLE PART NUMBER	TOP-SIDE MARKING(3)
–40°C to 85°C	NanoStar™ – WCSP (DSBGA) 0.23-mm Large Bump – YZP (Pb-free)	Reel of 3000	SN74AUP1T97YZPR	_ _ _TH_
	NanoStar™ – WCSP (DSBGA) 0.23-mm Large Bump – YFP	Reel of 3000	SN74AUP1T97YFPR	_ _ _TH_
	QFN – DRY	Reel of 5000	SN74AUP1T97DRYR	TH
	uQFN – DSF	Reel of 5000	SN74AUP1T97DSFR	TH
	SOT (SOT-23) – DBV	Reel of 3000	SN74AUP1T97DBVR	HT4_
	SOT (SC-70) – DCK	Reel of 3000	SN74AUP1T97DCKR	TH_

(1) For the most current package and ordering information, see the Package Option Addendum at the end of this document, or see the TI web site at www.ti.com.
(2) Package drawings, thermal data, and symbolization are available at www.ti.com/packaging.
(3) DBV/DCK: The actual top-side marking has one additional character that designates the wafer fab/assembly site.
YZP: The actual top-side marking has three preceding characters to denote year, month, and sequence code, and one following character to designate the wafer fab/assembly site. Pin 1 identifier indicates solder-bump composition (1 = SnPb, ● = Pb-free).

FUNCTION SELECTION TABLE

LOGIC FUNCTION	FIGURE NO.
2-to-1 data selector	5
2-input AND gate	6
2-input OR gate with one inverted input	7
2-input NAND gate with one inverted input	7
2-input AND gate with one inverted input	8
2-input NOR gate with one inverted input	8
2-input OR gate	9
Inverter	10
Noninverted buffer	11

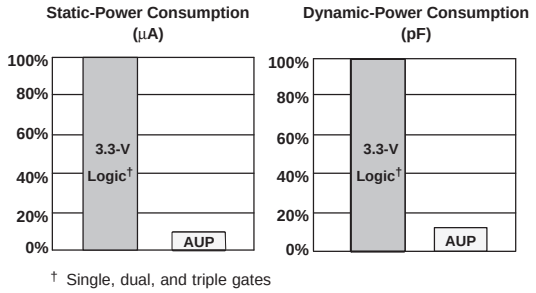

Figure 1. AUP – The Lowest-Power Family

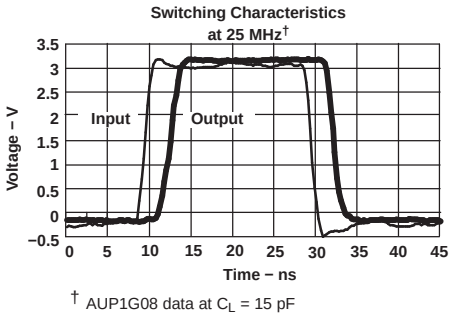

Figure 2. Excellent Signal Integrity

Copyright © 2004–2010, Texas Instruments Incorporated

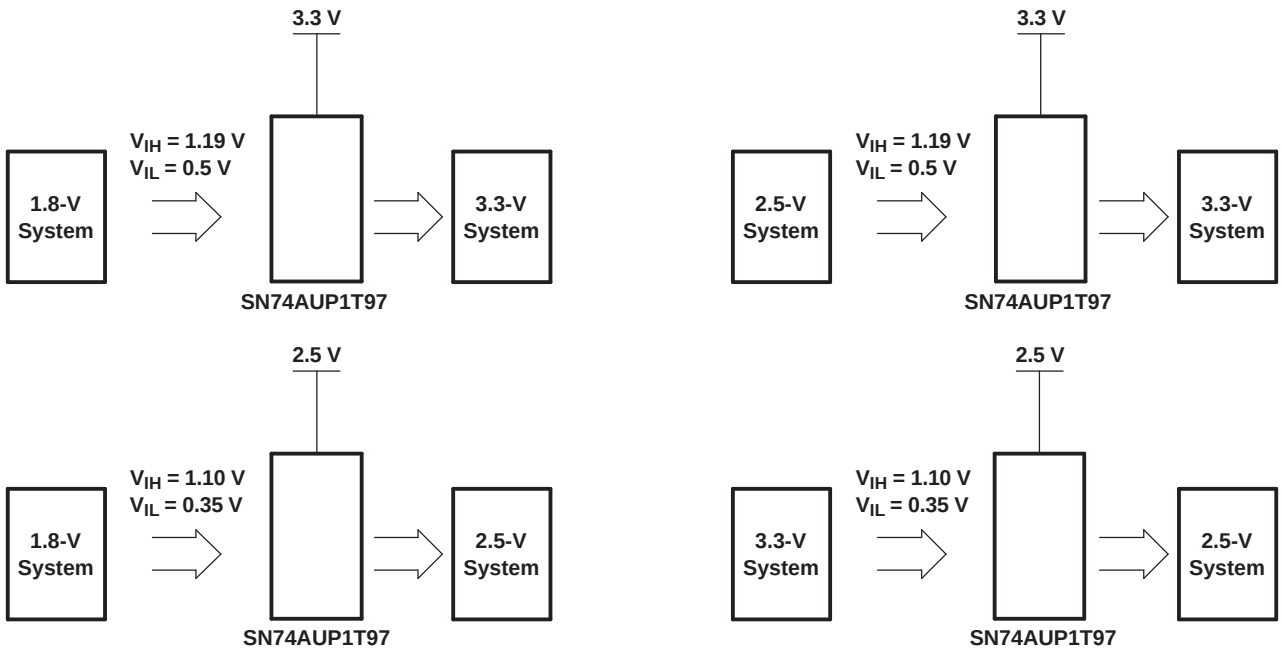

Figure 3. Possible Voltage-Translation Combinations

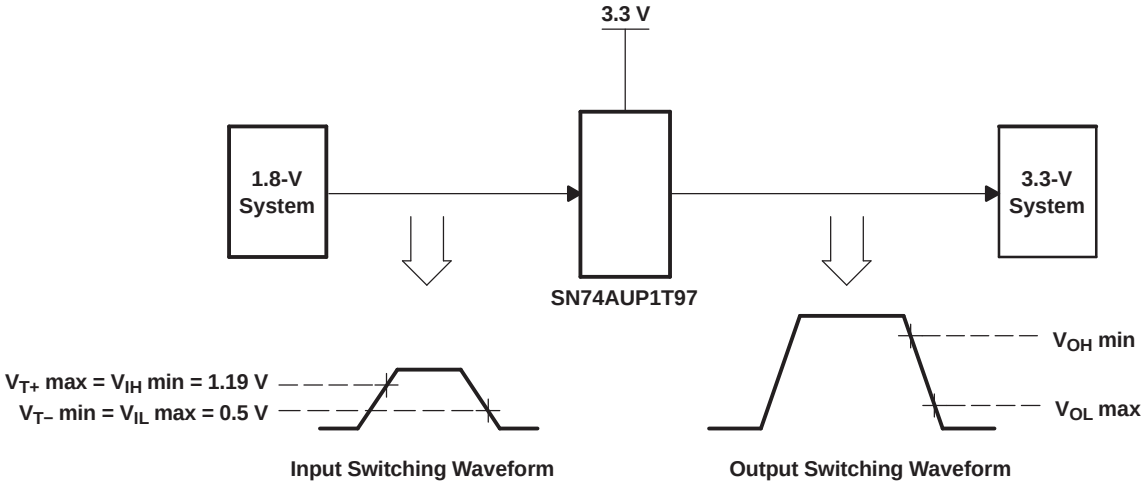

Figure 4. Switching Thresholds for 1.8-V to 3.3-V Translation

FUNCTION TABLE

INPUTS			OUTPUT
C	B	A	Y
L	L	L	L
L	L	H	L
L	H	L	H
L	H	H	H
H	L	L	L
H	L	H	H
H	H	L	L
H	H	H	H

LOGIC DIAGRAM (POSITIVE LOGIC)

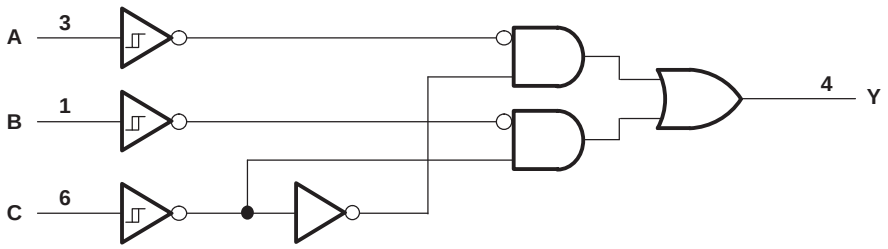

LOGIC CONFIGURATIONS

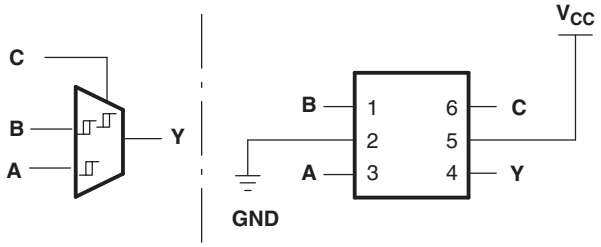

Figure 5. 157: 2-to-1 Data Selector/MUX
When C is L, Y = B
When C is H, Y = A

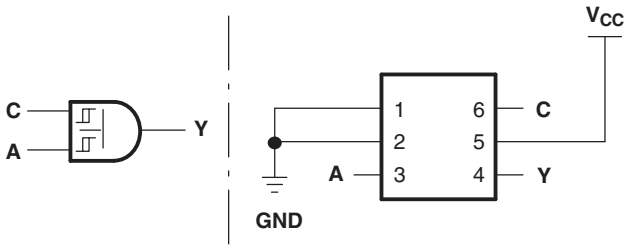

Figure 6. 08: 2-Input AND Gate

Copyright © 2004–2010, Texas Instruments Incorporated

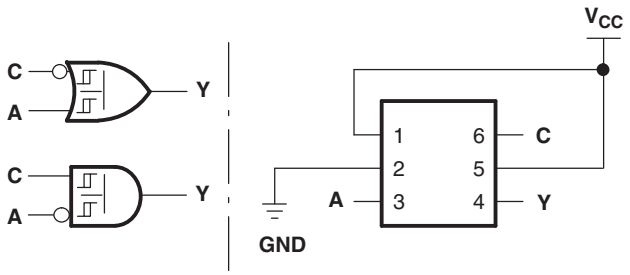

Figure 7. 14+32/14+00: 2-Input OR/NAND Gate With One Inverted Input

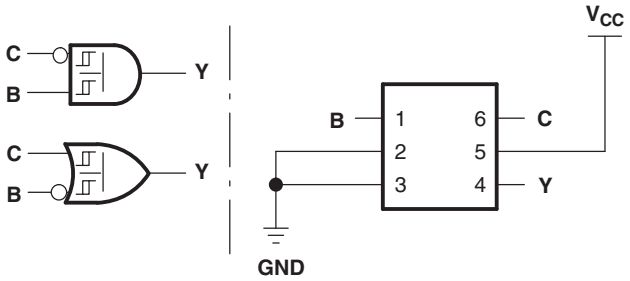

Figure 8. 14+08/14+02: 2-Input AND/NOR Gate With One Inverted Input

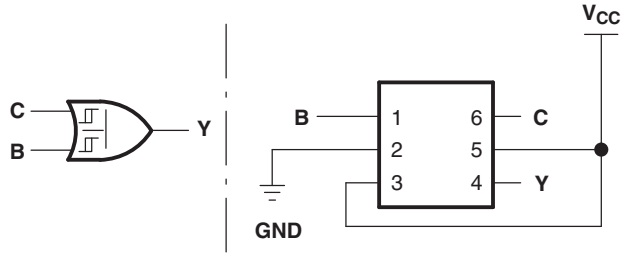

Figure 9. 32: 2-Input OR Gate

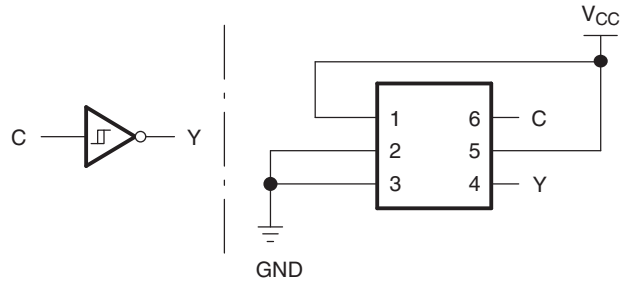

Figure 10. 04/14: Inverter

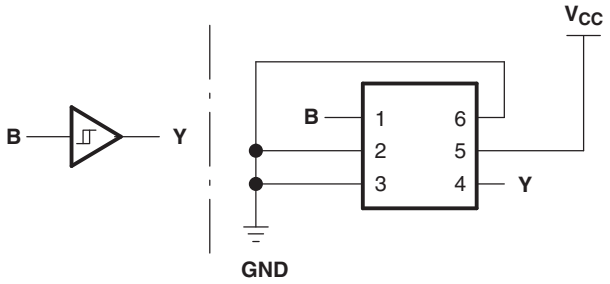

Figure 11. 17/34: Noninverted Buffer

Copyright © 2004–2010, Texas Instruments Incorporated

ABSOLUTE MAXIMUM RATINGS[1]

over operating free-air temperature range (unless otherwise noted)

			MIN	MAX	UNIT
V_{CC}	Supply voltage range		–0.5	4.6	V
V_I	Input voltage range[2]		–0.5	4.6	V
V_O	Voltage range applied to any output in the high-impedance or power-off state[2]		–0.5	4.6	V
V_O	Output voltage range in the high or low state[2]		–0.5	V_{CC} + 0.5	V
I_{IK}	Input clamp current	$V_I < 0$		–50	mA
I_{OK}	Output clamp current	$V_O < 0$		–50	mA
I_O	Continuous output current			±20	mA
	Continuous current through V_{CC} or GND			±50	mA
θ_{JA}	Package thermal impedance[3]	DBV package		165	°C/W
		DCK package		259	
		DRY package		340	
		DSF package		300	
		YFP package		123	
		YZP package		123	
T_{stg}	Storage temperature range		–65	150	°C

(1) Stresses beyond those listed under "absolute maximum ratings" may cause permanent damage to the device. These are stress ratings only, and functional operation of the device at these or any other conditions beyond those indicated under "recommended operating conditions" is not implied. Exposure to absolute-maximum-rated conditions for extended periods may affect device reliability.
(2) The input negative-voltage and output voltage ratings may be exceeded if the input and output current ratings are observed.
(3) The package thermal impedance is calculated in accordance with JESD 51-7.

RECOMMENDED OPERATING CONDITIONS[1]

			MIN	MAX	UNIT
V_{CC}	Supply voltage		2.3	3.6	V
V_I	Input voltage		0	3.6	V
V_O	Output voltage		0	V_{CC}	V
I_{OH}	High-level output current	V_{CC} = 2.3 V		–3.1	mA
		V_{CC} = 3 V		–4	
I_{OL}	Low-level output current	V_{CC} = 2.3 V		3.1	mA
		V_{CC} = 3 V		4	
T_A	Operating free-air temperature		–40	85	°C

(1) All unused inputs of the device must be held at V_{CC} or GND to ensure proper device operation. See the TI application report *Implications of Slow or Floating CMOS Inputs*, literature number SCBA004.

Copyright © 2004–2010, Texas Instruments Incorporated

ELECTRICAL CHARACTERISTICS

over recommended operating free-air temperature range (unless otherwise noted)

PARAMETER	TEST CONDITIONS	V_{CC}	T_A = 25°C			T_A = –40°C to 85°C		UNIT
			MIN	TYP	MAX	MIN	MAX	
V_{T+} Positive-going input threshold voltage		2.3 V to 2.7 V	0.6		1.1	0.6	1.1	V
		3 V to 3.6 V	0.75		1.16	0.75	1.19	
V_{T-} Negative-going input threshold voltage		2.3 V to 2.7 V	0.35		0.6	0.35	0.6	V
		3 V to 3.6 V	0.5		0.85	0.5	0.85	
ΔV_T Hysteresis ($V_{T+} - V_{T-}$)		2.3 V to 2.7 V	0.23		0.6	0.1	0.6	V
		3 V to 3.6 V	0.25		0.56	0.15	0.56	
V_{OH}	I_{OH} = –20 µA	2.3 V to 3.6 V	V_{CC} – 0.1			V_{CC} – 0.1		V
	I_{OH} = –2.3 mA	2.3 V	2.05			1.97		
	I_{OH} = –3.1 mA		1.9			1.85		
	I_{OH} = –2.7 mA	3 V	2.72			2.67		
	I_{OH} = –4 mA		2.6			2.55		
V_{OL}	I_{OL} = 20 µA	2.3 V to 3.6 V			0.1		0.1	V
	I_{OL} = 2.3 mA	2.3 V			0.31		0.33	
	I_{OL} = 3.1 mA				0.44		0.45	
	I_{OL} = 2.7 mA	3 V			0.31		0.33	
	I_{OL} = 4 mA				0.44		0.45	
I_I All inputs	V_I = 3.6 V or GND	0 V to 3.6 V			0.1		0.5	µA
I_{off}	V_I or V_O = 0 V to 3.6 V	0 V			0.1		0.5	µA
ΔI_{off}	V_I or V_O = 3.6 V	0 V to 0.2 V			0.2		0.5	µA
I_{CC}	V_I = 3.6 V or GND, I_O = 0	2.3 V to 3.6 V			0.5		0.9	µA
ΔI_{CC}	One input at 0.3 V or 1.1 V, Other inputs at 0 or V_{CC}, I_O = 0	2.3 V to 2.7 V					4	µA
	One input at 0.45 V or 1.2 V, Other inputs at 0 or V_{CC}, I_O = 0	3 V to 3.6 V					12	
C_i	V_I = V_{CC} or GND	3.3 V		1.5				pF
C_o	V_O = V_{CC} or GND	3.3 V		3				pF

SWITCHING CHARACTERISTICS

over recommended operating free-air temperature range, V_{CC} = 2.5 V ± 0.2 V, V_I = 1.8 V ± 0.15 V (unless otherwise noted) (see Figure 12)

PARAMETER	FROM (INPUT)	TO (OUTPUT)	C_L	T_A = 25°C			T_A = –40°C to 85°C		UNIT
				MIN	TYP	MAX	MIN	MAX	
t_{pd}	A, B, or C	Y	5 pF	1.8	2.3	2.9	0.5	6.8	ns
			10 pF	2.3	2.8	3.4	1	7.9	
			15 pF	2.6	3.1	3.8	1	8.7	
			30 pF	3.8	4.4	5.1	1.5	10.8	

Copyright © 2004–2010, Texas Instruments Incorporated

SWITCHING CHARACTERISTICS

over recommended operating free-air temperature range, V_{CC} = 2.5 V ± 0.2 V, V_I = 2.5 V ± 0.2 V (unless otherwise noted) (see Figure 12)

PARAMETER	FROM (INPUT)	TO (OUTPUT)	C_L	T_A = 25°C			T_A = –40°C to 85°C		UNIT
				MIN	TYP	MAX	MIN	MAX	
t_{pd}	A, B, or C	Y	5 pF	1.8	2.3	3.1	0.5	6	ns
			10 pF	2.2	2.8	3.5	1	7.1	
			15 pF	2.6	3.2	5.2	1	7.9	
			30 pF	3.7	4.4	5.2	1.5	10	

SWITCHING CHARACTERISTICS

over recommended operating free-air temperature range, V_{CC} = 2.5 V ± 0.2 V, V_I = 3.3 V ± 0.3 V (unless otherwise noted) (see Figure 12)

PARAMETER	FROM (INPUT)	TO (OUTPUT)	C_L	T_A = 25°C			T_A = –40°C to 85°C		UNIT
				MIN	TYP	MAX	MIN	MAX	
t_{pd}	A, B, or C	Y	5 pF	2	2.7	3.5	0.5	5.5	ns
			10 pF	2.4	3.1	3.9	1	6.5	
			15 pF	2.8	3.5	4.3	1	7.4	
			30 pF	4	4.7	5.5	1.5	9.5	

SWITCHING CHARACTERISTICS

over recommended operating free-air temperature range, V_{CC} = 3.3 V ± 0.3 V, V_I = 1.8 V ± 0.15 V (unless otherwise noted) (see Figure 12)

PARAMETER	FROM (INPUT)	TO (OUTPUT)	C_L	T_A = 25°C			T_A = –40°C to 85°C		UNIT
				MIN	TYP	MAX	MIN	MAX	
t_{pd}	A, B, or C	Y	5 pF	1.6	2	2.5	0.5	8	ns
			10 pF	2	2.4	2.9	1	8.5	
			15 pF	2.3	2.8	3.3	1	9.1	
			30 pF	3.4	3.9	4.4	1.5	9.8	

SWITCHING CHARACTERISTICS

over recommended operating free-air temperature range, V_{CC} = 3.3 V ± 0.3 V, V_I = 2.5 V ± 0.2 V (unless otherwise noted) (see Figure 12)

PARAMETER	FROM (INPUT)	TO (OUTPUT)	C_L	T_A = 25°C			T_A = –40°C to 85°C		UNIT
				MIN	TYP	MAX	MIN	MAX	
t_{pd}	A, B, or C	Y	5 pF	1.6	1.9	2.4	0.5	5.3	ns
			10 pF	2	2.3	2.7	1	6.1	
			15 pF	2.3	2.7	3.1	1	6.8	
			30 pF	3.4	3.8	4.2	1.5	8.5	

Copyright © 2004–2010, Texas Instruments Incorporated

SWITCHING CHARACTERISTICS

over recommended operating free-air temperature range, V_{CC} = 3.3 V ± 0.3 V, V_I = 3.3 V ± 0.3 V (unless otherwise noted) (see Figure 12)

PARAMETER	FROM (INPUT)	TO (OUTPUT)	C_L	T_A = 25°C			T_A = –40°C to 85°C		UNIT
				MIN	TYP	MAX	MIN	MAX	
t_{pd}	A, B, or C	Y	5 pF	1.6	2.1	2.7	0.5	4.7	ns
			10 pF	2	2.4	3	1	5.7	
			15 pF	2.3	2.7	3.3	1	6.2	
			30 pF	3.4	3.8	4.4	1.5	7.8	

OPERATING CHARACTERISTICS

T_A = 25°C

PARAMETER		TEST CONDITIONS	V_{CC} = 2.5 V	V_{CC} = 3.3 V	UNIT
			TYP	TYP	
C_{pd}	Power dissipation capacitance	f = 10 MHz	4	5	pF

Copyright © 2004–2010, Texas Instruments Incorporated

PARAMETER MEASUREMENT INFORMATION

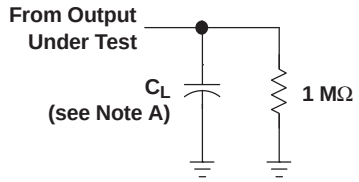

LOAD CIRCUIT

	V_{CC} = 2.5 V ± 0.2 V	V_{CC} = 3.3 V ± 0.3 V
C_L	5, 10, 15, 30 pF	5, 10, 15, 30 pF
V_{MI}	$V_I/2$	$V_I/2$
V_{MO}	$V_{CC}/2$	$V_{CC}/2$

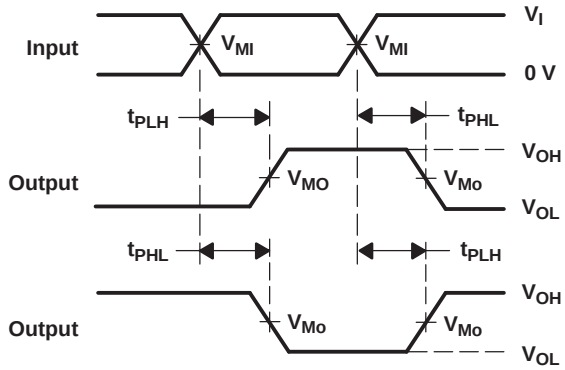

VOLTAGE WAVEFORMS
PROPAGATION DELAY TIMES
INVERTING AND NONINVERTING OUTPUTS

NOTES: A. C_L includes probe and jig capacitance.
B. All input pulses are supplied by generators having the following characteristics: PRR ≤ 10 MHz, Z_O = 50 Ω, slew rate ≥ 1 V/ns.
C. The outputs are measured one at a time, with one transition per measurement.
D. t_{PLH} and t_{PHL} are the same as t_{pd}.

Figure 12. Load Circuit and Voltage Waveforms

PACKAGING INFORMATION

Orderable Device	Status (1)	Package Type	Package Drawing	Pins	Package Qty	Eco Plan (2)	Lead/Ball Finish (6)	MSL Peak Temp (3)	Op Temp (°C)	Device Marking (4/5)	Samples
SN74AUP1T97DBVR	ACTIVE	SOT-23	DBV	6	3000	Green (RoHS & no Sb/Br)	CU NIPDAU	Level-1-260C-UNLIM	-40 to 85	HT4R	Samples
SN74AUP1T97DBVT	ACTIVE	SOT-23	DBV	6	250	Green (RoHS & no Sb/Br)	CU NIPDAU	Level-1-260C-UNLIM	-40 to 85	(HT4F, HT4R)	Samples
SN74AUP1T97DCKR	ACTIVE	SC70	DCK	6	3000	Green (RoHS & no Sb/Br)	CU NIPDAU	Level-1-260C-UNLIM	-40 to 85	(THF, THR)	Samples
SN74AUP1T97DCKRG4	ACTIVE	SC70	DCK	6	3000	Green (RoHS & no Sb/Br)	CU NIPDAU	Level-1-260C-UNLIM	-40 to 85	(THF, THR)	Samples
SN74AUP1T97DRYR	ACTIVE	SON	DRY	6	5000	Green (RoHS & no Sb/Br)	CU NIPDAU	Level-1-260C-UNLIM	-40 to 85	TH	Samples
SN74AUP1T97DSFR	ACTIVE	SON	DSF	6	5000	Green (RoHS & no Sb/Br)	CU NIPDAU | CU NIPDAUAG	Level-1-260C-UNLIM	-40 to 85	TH	Samples
SN74AUP1T97YFPR	ACTIVE	DSBGA	YFP	6	3000	Green (RoHS & no Sb/Br)	SNAGCU	Level-1-260C-UNLIM	-40 to 85	(TH2, THN)	Samples
SN74AUP1T97YZPR	ACTIVE	DSBGA	YZP	6	3000	Green (RoHS & no Sb/Br)	SNAGCU	Level-1-260C-UNLIM	-40 to 85	(TH2, TH7, THN)	Samples

(1) The marketing status values are defined as follows:
ACTIVE: Product device recommended for new designs.
LIFEBUY: TI has announced that the device will be discontinued, and a lifetime-buy period is in effect.
NRND: Not recommended for new designs. Device is in production to support existing customers, but TI does not recommend using this part in a new design.
PREVIEW: Device has been announced but is not in production. Samples may or may not be available.
OBSOLETE: TI has discontinued the production of the device.

(2) **RoHS:** TI defines "RoHS" to mean semiconductor products that are compliant with the current EU RoHS requirements for all 10 RoHS substances, including the requirement that RoHS substance do not exceed 0.1% by weight in homogeneous materials. Where designed to be soldered at high temperatures, "RoHS" products are suitable for use in specified lead-free processes. TI may reference these types of products as "Pb-Free".
RoHS Exempt: TI defines "RoHS Exempt" to mean products that contain lead but are compliant with EU RoHS pursuant to a specific EU RoHS exemption.
Green: TI defines "Green" to mean the content of Chlorine (Cl) and Bromine (Br) based flame retardants meet JS709B low halogen requirements of <=1000ppm threshold. Antimony trioxide based flame retardants must also meet the <=1000ppm threshold requirement.

(3) MSL, Peak Temp. - The Moisture Sensitivity Level rating according to the JEDEC industry standard classifications, and peak solder temperature.

(4) There may be additional marking, which relates to the logo, the lot trace code information, or the environmental category on the device.

(5) Multiple Device Markings will be inside parentheses. Only one Device Marking contained in parentheses and separated by a "~" will appear on a device. If a line is indented then it is a continuation of the previous line and the two combined represent the entire Device Marking for that device.

(6) Lead/Ball Finish - Orderable Devices may have multiple material finish options. Finish options are separated by a vertical ruled line. Lead/Ball Finish values may wrap to two lines if the finish value exceeds the maximum column width.

Important Information and Disclaimer: The information provided on this page represents TI's knowledge and belief as of the date that it is provided. TI bases its knowledge and belief on information provided by third parties, and makes no representation or warranty as to the accuracy of such information. Efforts are underway to better integrate information from third parties. TI has taken and continues to take reasonable steps to provide representative and accurate information but may not have conducted destructive testing or chemical analysis on incoming materials and chemicals. TI and TI suppliers consider certain information to be proprietary, and thus CAS numbers and other limited information may not be available for release.

In no event shall TI's liability arising out of such information exceed the total purchase price of the TI part(s) at issue in this document sold by TI to Customer on an annual basis.

TAPE AND REEL INFORMATION

REEL DIMENSIONS

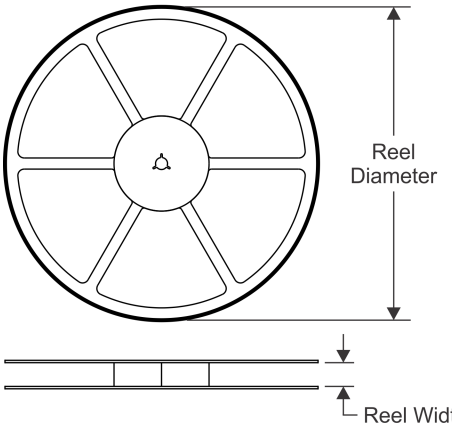

TAPE DIMENSIONS

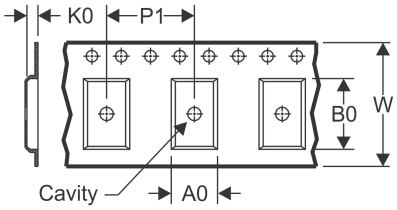

A0	Dimension designed to accommodate the component width
B0	Dimension designed to accommodate the component length
K0	Dimension designed to accommodate the component thickness
W	Overall width of the carrier tape
P1	Pitch between successive cavity centers

QUADRANT ASSIGNMENTS FOR PIN 1 ORIENTATION IN TAPE

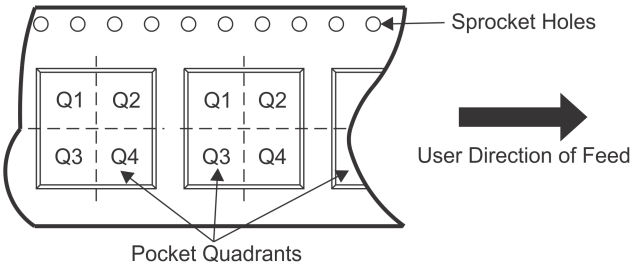

*All dimensions are nominal

Device	Package Type	Package Drawing	Pins	SPQ	Reel Diameter (mm)	Reel Width W1 (mm)	A0 (mm)	B0 (mm)	K0 (mm)	P1 (mm)	W (mm)	Pin1 Quadrant
SN74AUP1T97DBVR	SOT-23	DBV	6	3000	180.0	8.4	3.23	3.17	1.37	4.0	8.0	Q3
SN74AUP1T97DBVT	SOT-23	DBV	6	250	180.0	8.4	3.23	3.17	1.37	4.0	8.0	Q3
SN74AUP1T97DCKR	SC70	DCK	6	3000	180.0	8.4	2.41	2.41	1.2	4.0	8.0	Q3
SN74AUP1T97DRYR	SON	DRY	6	5000	180.0	8.4	1.25	1.6	0.7	4.0	8.0	Q1
SN74AUP1T97DSFR	SON	DSF	6	5000	180.0	9.5	1.16	1.16	0.63	4.0	8.0	Q2
SN74AUP1T97DSFR	SON	DSF	6	5000	180.0	8.4	1.16	1.16	0.63	4.0	8.0	Q2
SN74AUP1T97YFPR	DSBGA	YFP	6	3000	178.0	9.2	0.89	1.29	0.62	4.0	8.0	Q1
SN74AUP1T97YZPR	DSBGA	YZP	6	3000	178.0	9.2	1.02	1.52	0.63	4.0	8.0	Q1

TAPE AND REEL BOX DIMENSIONS

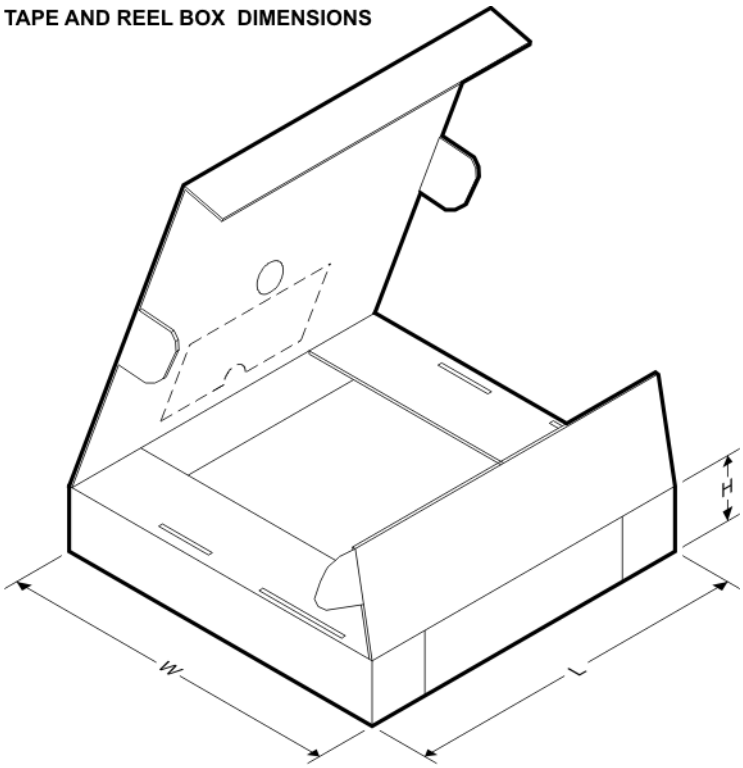

*All dimensions are nominal

Device	Package Type	Package Drawing	Pins	SPQ	Length (mm)	Width (mm)	Height (mm)
SN74AUP1T97DBVR	SOT-23	DBV	6	3000	202.0	201.0	28.0
SN74AUP1T97DBVT	SOT-23	DBV	6	250	202.0	201.0	28.0
SN74AUP1T97DCKR	SC70	DCK	6	3000	202.0	201.0	28.0
SN74AUP1T97DRYR	SON	DRY	6	5000	202.0	201.0	28.0
SN74AUP1T97DSFR	SON	DSF	6	5000	184.0	184.0	19.0
SN74AUP1T97DSFR	SON	DSF	6	5000	202.0	201.0	28.0
SN74AUP1T97YFPR	DSBGA	YFP	6	3000	220.0	220.0	35.0
SN74AUP1T97YZPR	DSBGA	YZP	6	3000	220.0	220.0	35.0

Images above are just a representation of the package family, actual package may vary.
Refer to the product data sheet for package details.

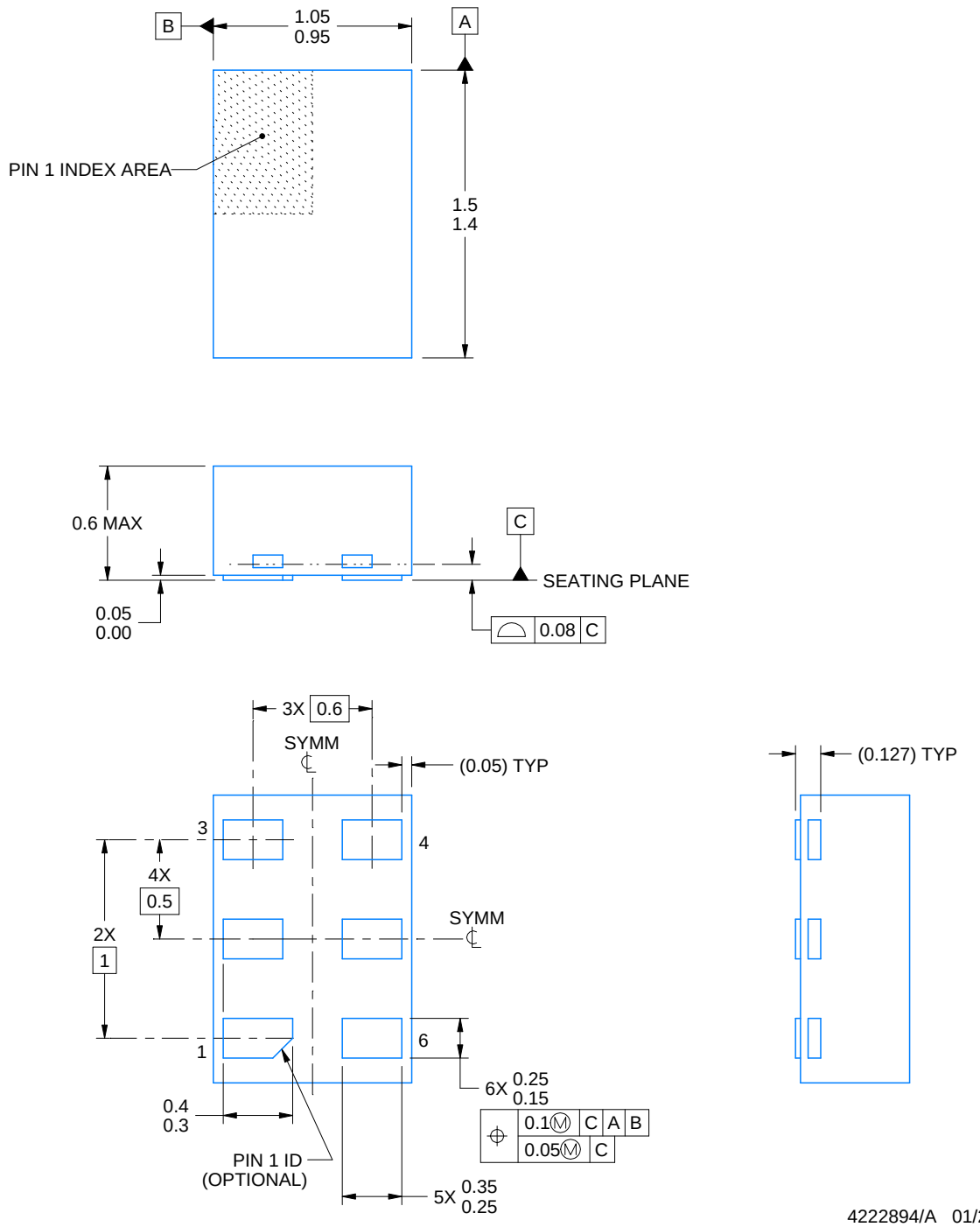

NOTES:

1. All linear dimensions are in millimeters. Any dimensions in parenthesis are for reference only. Dimensioning and tolerancing per ASME Y14.5M.
2. This drawing is subject to change without notice.

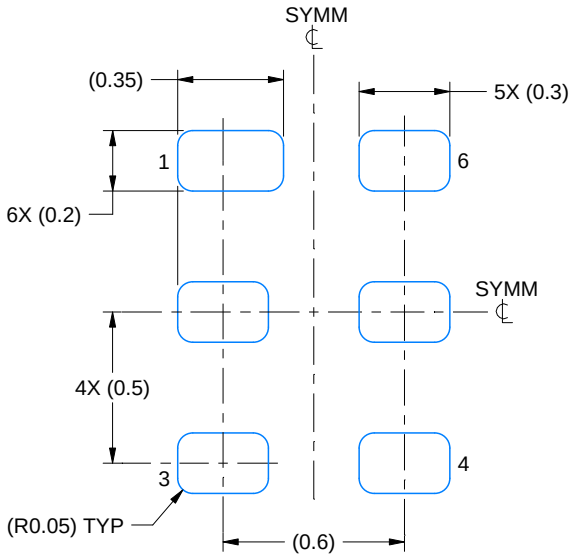

LAND PATTERN EXAMPLE
1:1 RATIO WITH PKG SOLDER PADS
EXPOSED METAL SHOWN
SCALE:40X

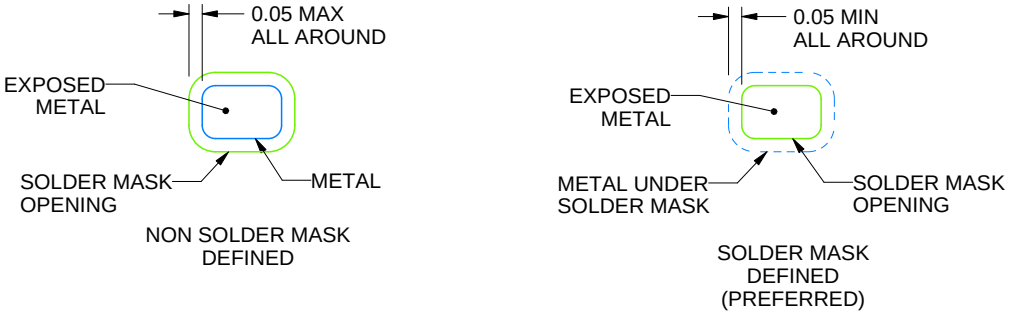

SOLDER MASK DETAILS

4222894/A 01/2018

NOTES: (continued)

3. For more information, see QFN/SON PCB application report in literature No. SLUA271 (www.ti.com/lit/slua271).

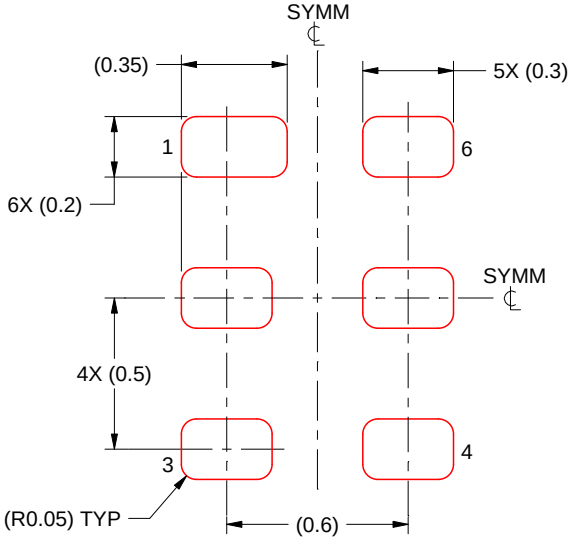

SOLDER PASTE EXAMPLE
BASED ON 0.075 - 0.1 mm THICK STENCIL
SCALE:40X

4222894/A 01/2018

NOTES: (continued)

4. Laser cutting apertures with trapezoidal walls and rounded corners may offer better paste release. IPC-7525 may have alternate design recommendations.

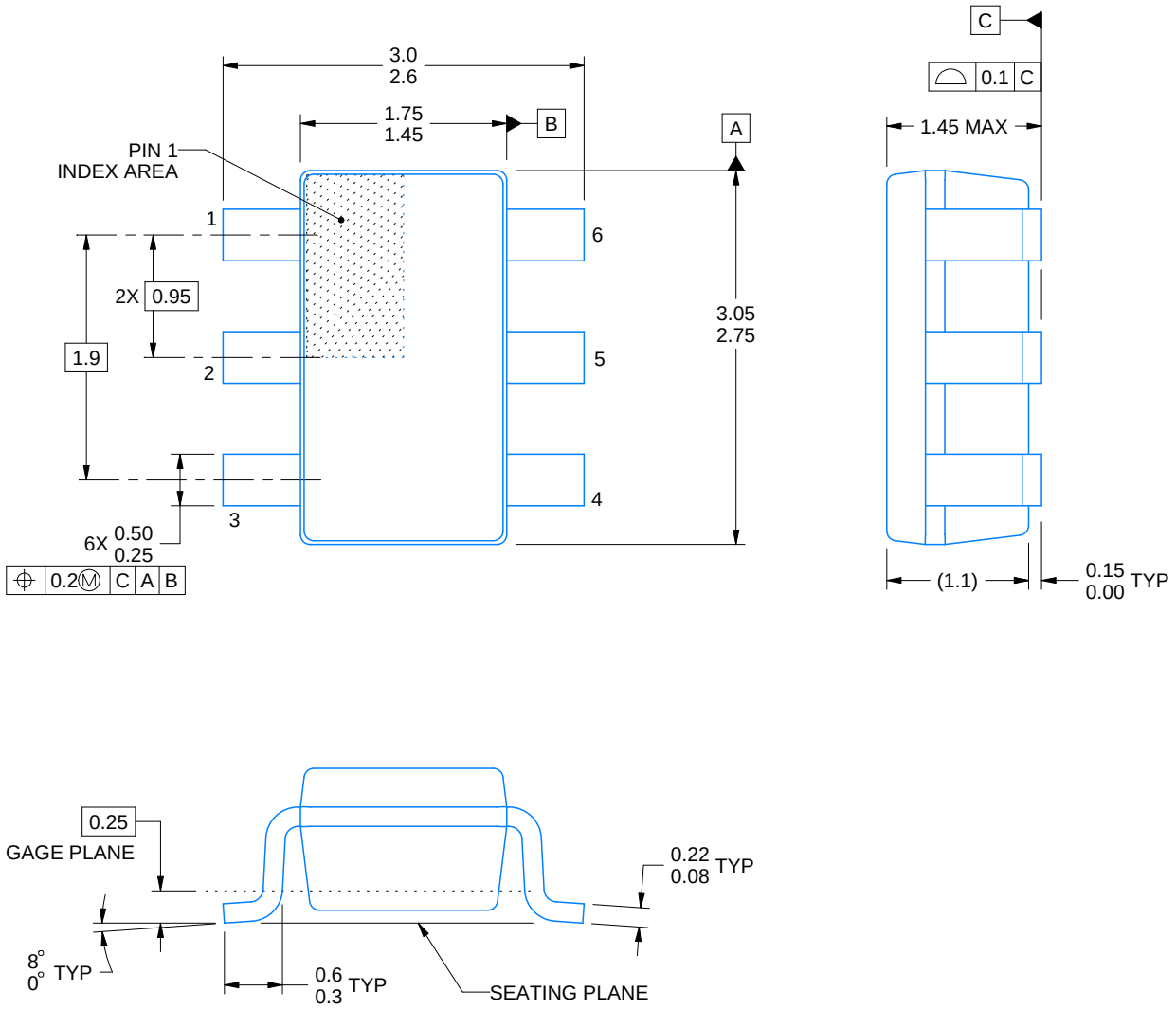

4214840/B 03/2018

NOTES:

1. All linear dimensions are in millimeters. Any dimensions in parenthesis are for reference only. Dimensioning and tolerancing per ASME Y14.5M.
2. This drawing is subject to change without notice.
3. Body dimensions do not include mold flash or protrusion. Mold flash and protrusion shall not exceed 0.15 per side.
4. Leads 1,2,3 may be wider than leads 4,5,6 for package orientation.
5. Refernce JEDEC MO-178.

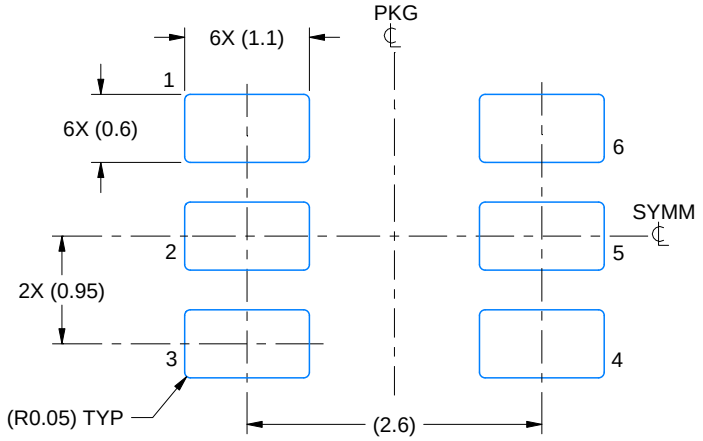

LAND PATTERN EXAMPLE
EXPOSED METAL SHOWN
SCALE:15X

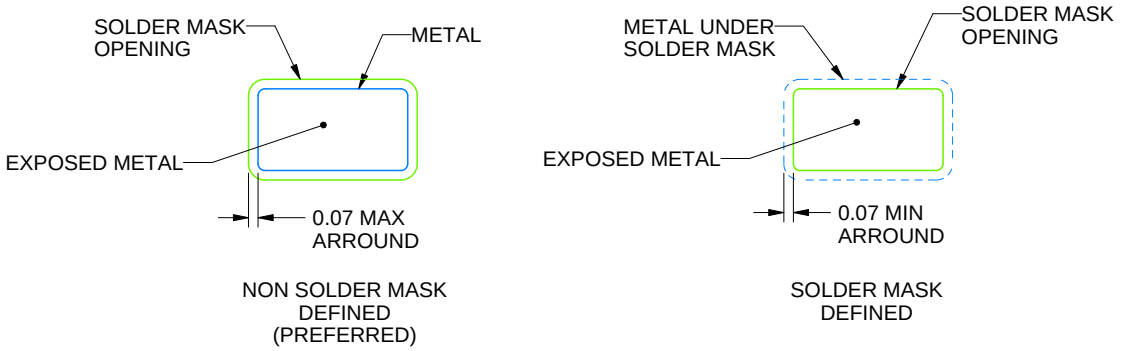

SOLDER MASK DETAILS

4214840/B 03/2018

NOTES: (continued)

6. Publication IPC-7351 may have alternate designs.
7. Solder mask tolerances between and around signal pads can vary based on board fabrication site.

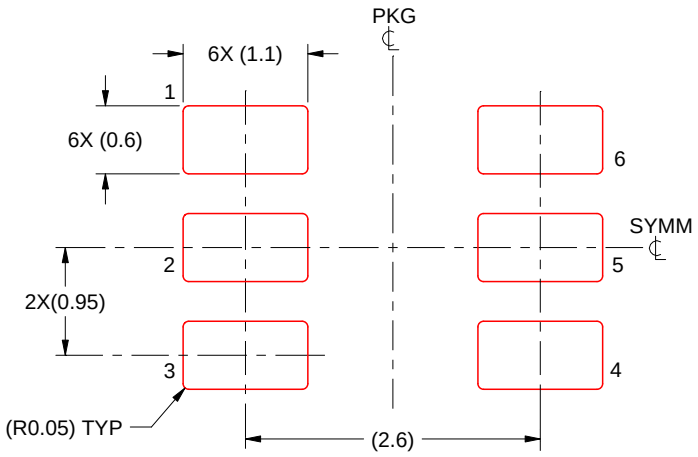

SOLDER PASTE EXAMPLE
BASED ON 0.125 mm THICK STENCIL
SCALE:15X

4214840/B 03/2018

NOTES: (continued)

8. Laser cutting apertures with trapezoidal walls and rounded corners may offer better paste release. IPC-7525 may have alternate design recommendations.
9. Board assembly site may have different recommendations for stencil design.

DCK (R–PDSO–G6) PLASTIC SMALL–OUTLINE PACKAGE

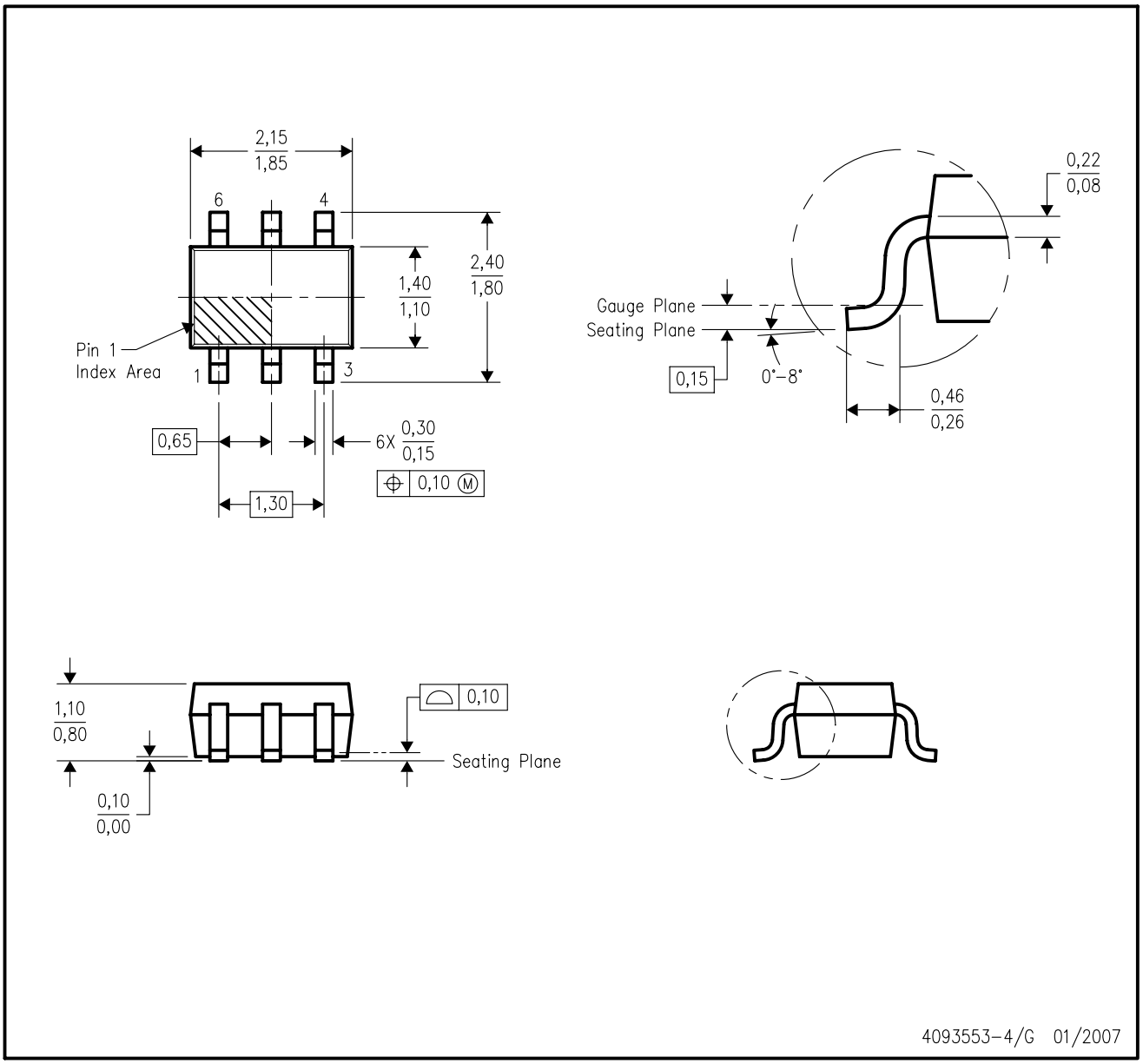

NOTES:
A. All linear dimensions are in millimeters.
B. This drawing is subject to change without notice.
C. Body dimensions do not include mold flash or protrusion. Mold flash and protrusion shall not exceed 0.15 per side.
D. Falls within JEDEC MO–203 variation AB.

DCK (R-PDSO-G6) PLASTIC SMALL OUTLINE

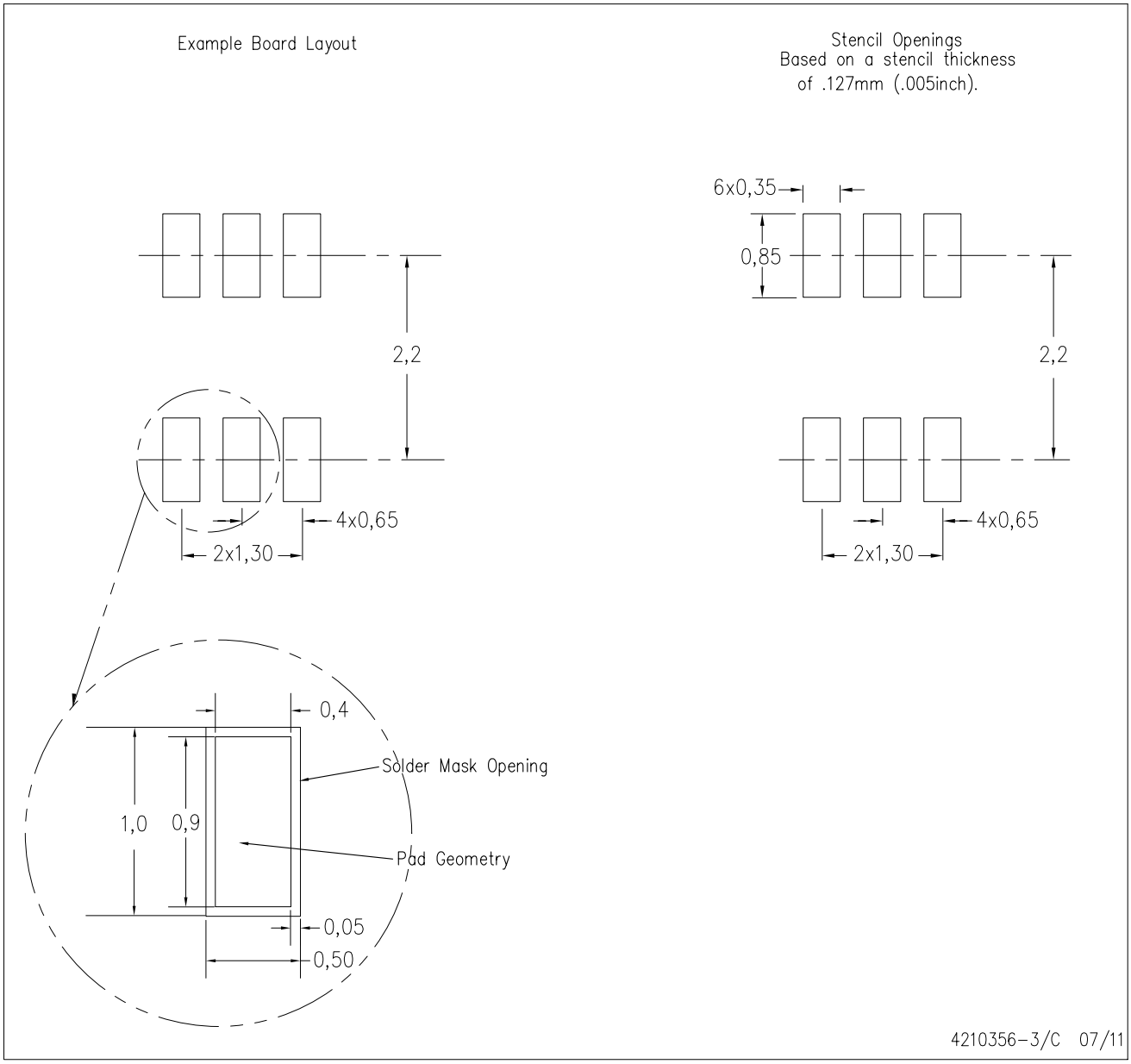

NOTES:
A. All linear dimensions are in millimeters.
B. This drawing is subject to change without notice.
C. Customers should place a note on the circuit board fabrication drawing not to alter the center solder mask defined pad.
D. Publication IPC-7351 is recommended for alternate designs.
E. Laser cutting apertures with trapezoidal walls and also rounding corners will offer better paste release. Customers should contact their board assembly site for stencil design recommendations. Example stencil design based on a 50% volumetric metal load solder paste. Refer to IPC-7525 for other stencil recommendations.

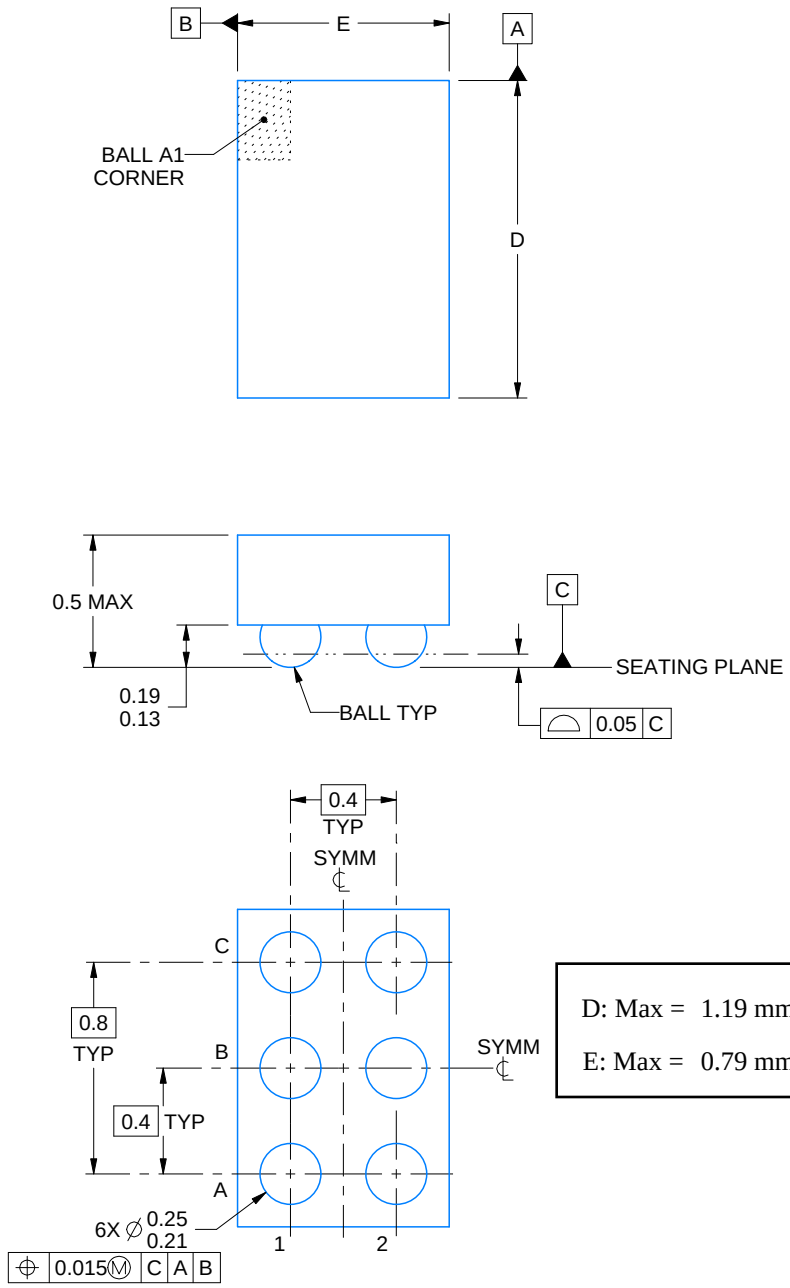

D: Max = 1.19 mm, Min = 1.13 mm

E: Max = 0.79 mm, Min = 0.73 mm

4223410/A 11/2016

NOTES:

1. All linear dimensions are in millimeters. Any dimensions in parenthesis are for reference only. Dimensioning and tolerancing per ASME Y14.5M.
2. This drawing is subject to change without notice.

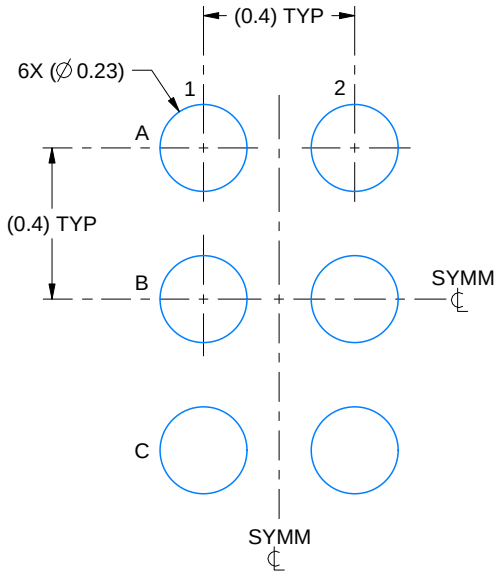

LAND PATTERN EXAMPLE
SCALE:50X

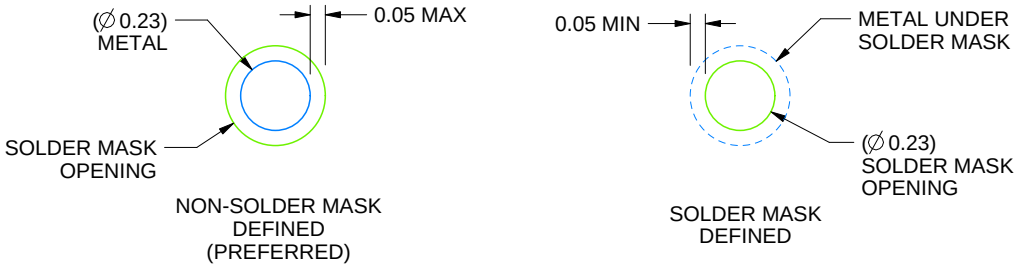

SOLDER MASK DETAILS
NOT TO SCALE

4223410/A 11/2016

NOTES: (continued)

3. Final dimensions may vary due to manufacturing tolerance considerations and also routing constraints.
   For more information, see Texas Instruments literature number SNVA009 (www.ti.com/lit/snva009).

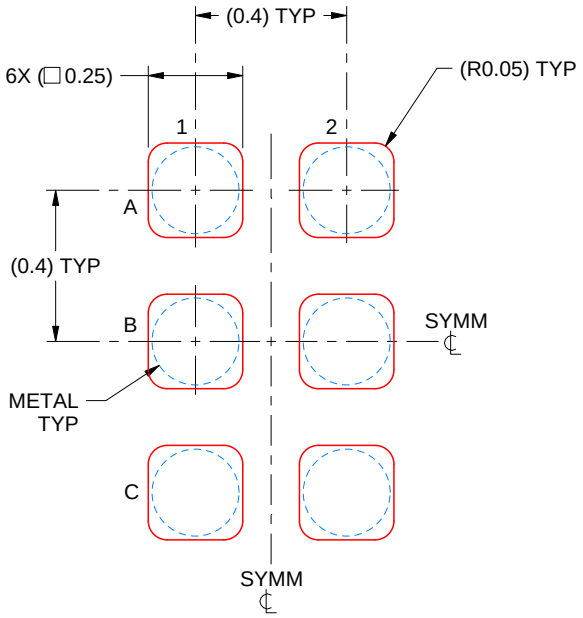

SOLDER PASTE EXAMPLE
BASED ON 0.1 mm THICK STENCIL
SCALE:50X

4223410/A 11/2016

NOTES: (continued)

4. Laser cutting apertures with trapezoidal walls and rounded corners may offer better paste release.

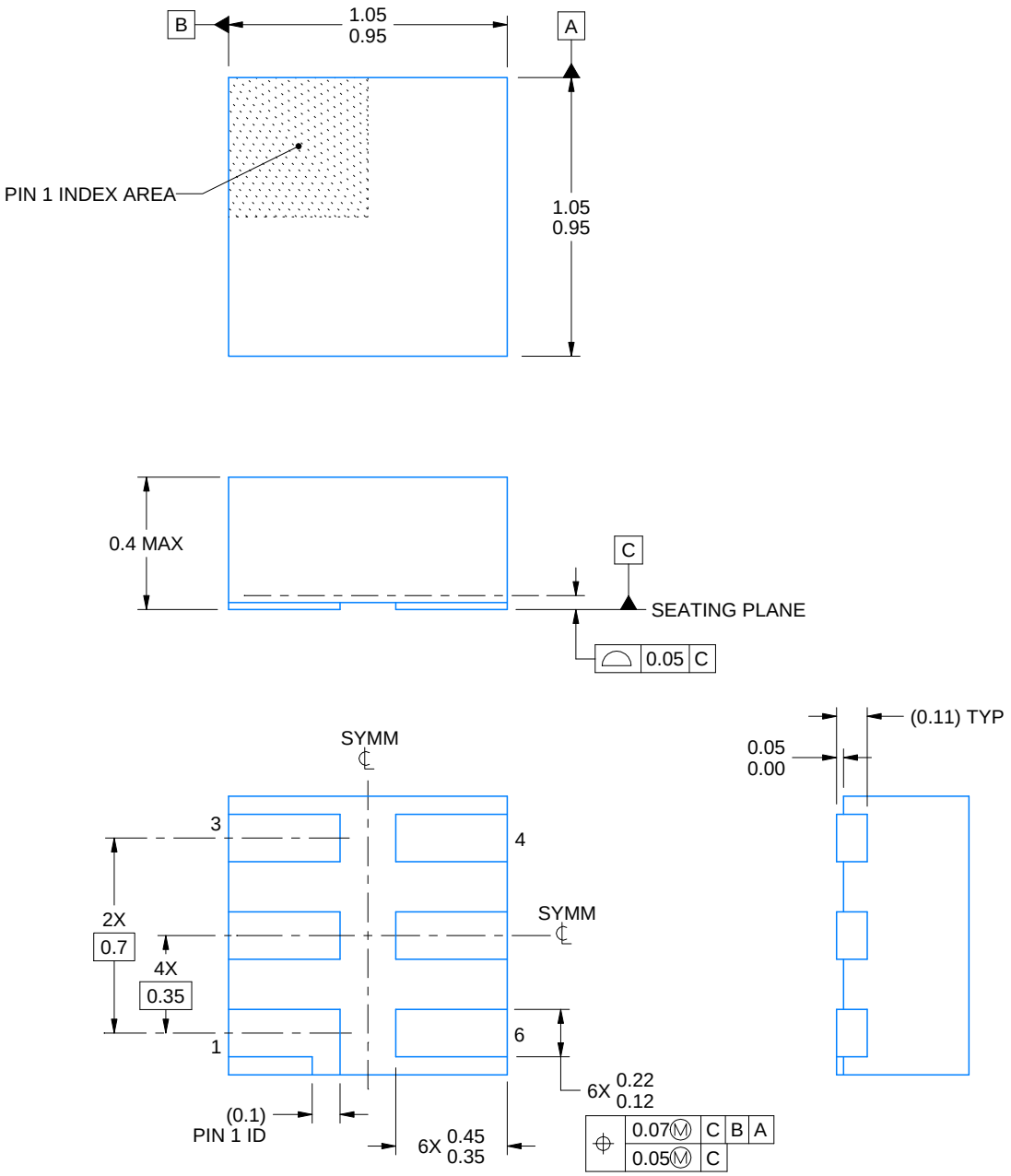

4220597/A 06/2017

NOTES:

1. All linear dimensions are in millimeters. Any dimensions in parenthesis are for reference only. Dimensioning and tolerancing per ASME Y14.5M.
2. This drawing is subject to change without notice.
3. Reference JEDEC registration MO-287, variation X2AAF.

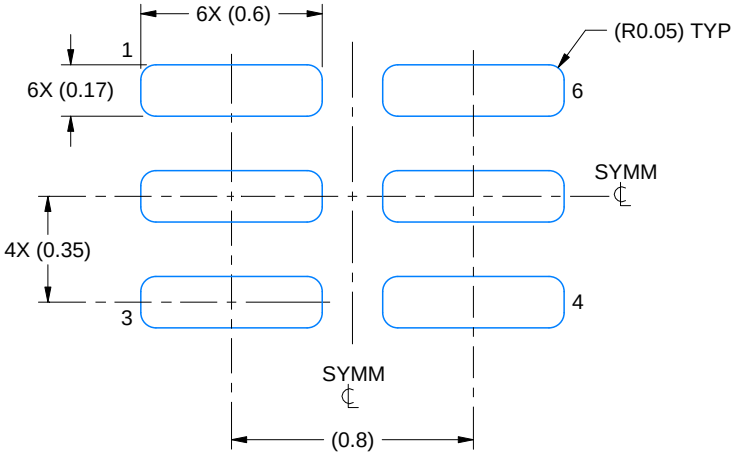

LAND PATTERN EXAMPLE
EXPOSED METAL SHOWN
SCALE:40X

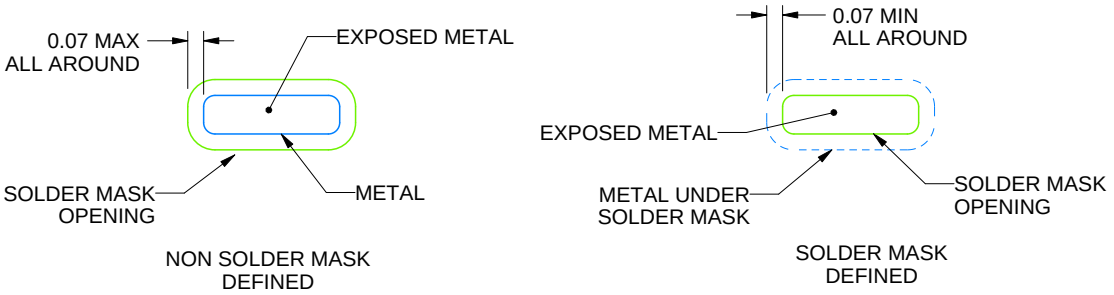

SOLDER MASK DETAILS

4220597/A 06/2017

NOTES: (continued)

4. For more information, see Texas Instruments literature number SLUA271 (www.ti.com/lit/slua271).

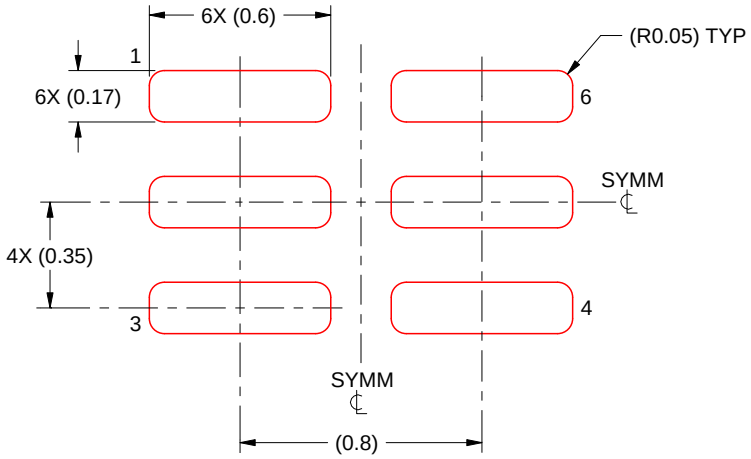

SOLDER PASTE EXAMPLE
BASED ON 0.125 mm THICK STENCIL

PRINTED SOLDER COVERAGE BY AREA UNDER PACKAGE
SCALE:40X

4220597/A 06/2017

4. Laser cutting apertures with trapezoidal walls and rounded corners may offer better paste release. IPC-7525 may have alternate design recommendations.

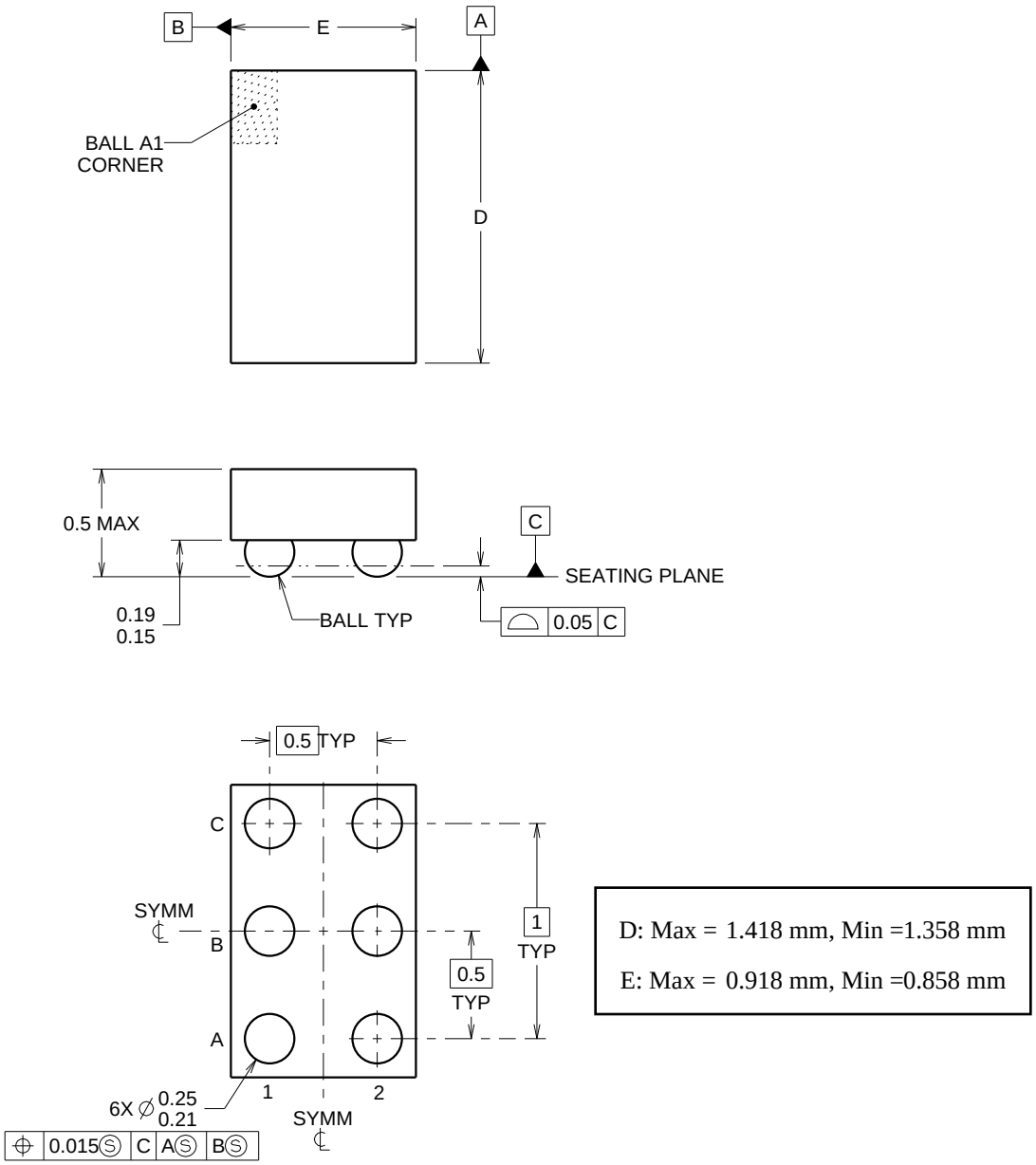

4219524/A 06/2014

NanoFree Is a trademark of Texas Instruments.

NOTES:

1. All linear dimensions are in millimeters. Any dimensions in parenthesis are for reference only. Dimensioning and tolerancing per ASME Y14.5M.
2. This drawing is subject to change without notice.
3. NanoFree™ package configuration.

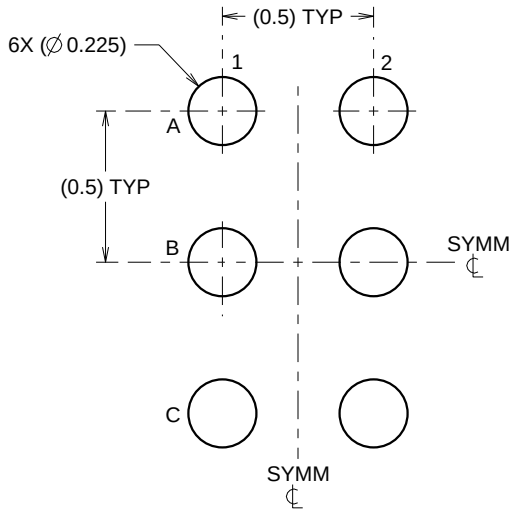

LAND PATTERN EXAMPLE
SCALE:40X

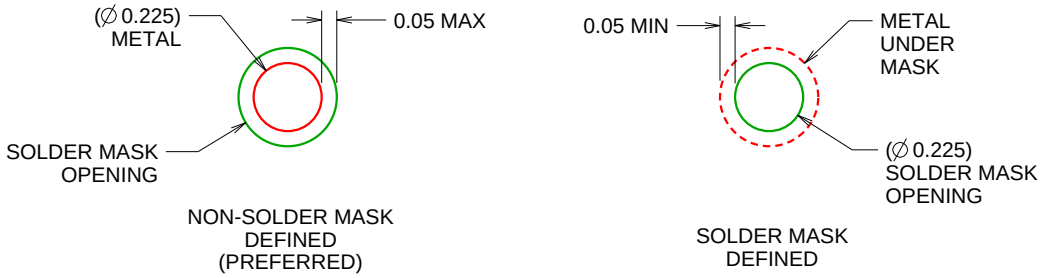

SOLDER MASK DETAILS
NOT TO SCALE

4219524/A 06/2014

NOTES: (continued)

4. Final dimensions may vary due to manufacturing tolerance considerations and also routing constraints.
   For more information, see Texas Instruments literature number SBVA017 (www.ti.com/lit/sbva017).

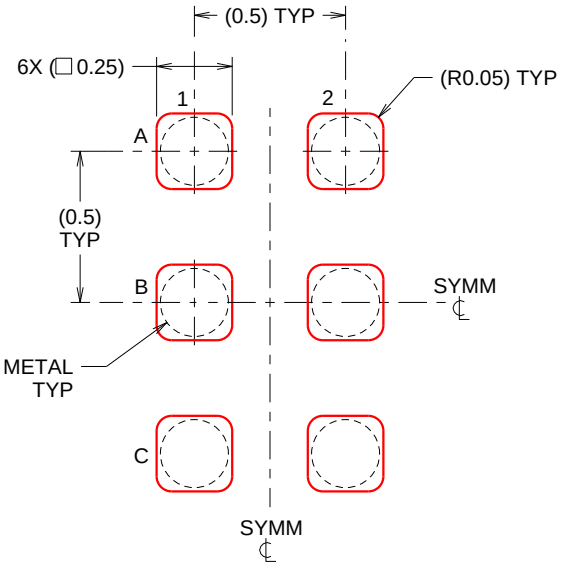

SOLDER PASTE EXAMPLE
BASED ON 0.1 mm THICK STENCIL
SCALE:40X

4219524/A 06/2014

NOTES: (continued)

5. Laser cutting apertures with trapezoidal walls and rounded corners may offer better paste release.

IMPORTANT NOTICE AND DISCLAIMER

TI PROVIDES TECHNICAL AND RELIABILITY DATA (INCLUDING DATASHEETS), DESIGN RESOURCES (INCLUDING REFERENCE DESIGNS), APPLICATION OR OTHER DESIGN ADVICE, WEB TOOLS, SAFETY INFORMATION, AND OTHER RESOURCES “AS IS” AND WITH ALL FAULTS, AND DISCLAIMS ALL WARRANTIES, EXPRESS AND IMPLIED, INCLUDING WITHOUT LIMITATION ANY IMPLIED WARRANTIES OF MERCHANTABILITY, FITNESS FOR A PARTICULAR PURPOSE OR NON-INFRINGEMENT OF THIRD PARTY INTELLECTUAL PROPERTY RIGHTS.

These resources are intended for skilled developers designing with TI products. You are solely responsible for (1) selecting the appropriate TI products for your application, (2) designing, validating and testing your application, and (3) ensuring your application meets applicable standards, and any other safety, security, or other requirements. These resources are subject to change without notice. TI grants you permission to use these resources only for development of an application that uses the TI products described in the resource. Other reproduction and display of these resources is prohibited. No license is granted to any other TI intellectual property right or to any third party intellectual property right. TI disclaims responsibility for, and you will fully indemnify TI and its representatives against, any claims, damages, costs, losses, and liabilities arising out of your use of these resources.

TI’s products are provided subject to TI’s Terms of Sale (www.ti.com/legal/termsofsale.html) or other applicable terms available either on ti.com or provided in conjunction with such TI products. TI’s provision of these resources does not expand or otherwise alter TI’s applicable warranties or warranty disclaimers for TI products.

Mailing Address: Texas Instruments, Post Office Box 655303, Dallas, Texas 75265
Copyright © 2019, Texas Instruments Incorporated