- **Member of the Texas Instruments Widebus+™ Family**
- **Optimized for 1.8-V Operation and is 3.6-V I/O Tolerant to Support Mixed-Mode Signal Operation**
- **I_{off} Supports Partial-Power-Down Mode Operation**
- **Sub 1-V Operable**
- **Max t_{pd} of 2.8 ns at 1.8 V**
- **Low Power Consumption, 40-µA Max I_{CC}**
- **±8-mA Output Drive at 1.8 V**
- **Bus Hold on Data Inputs Eliminates the Need for External Pullup/Pulldown Resistors**
- **Latch-Up Performance Exceeds 100 mA Per JESD 78, Class II**
- **ESD Protection Exceeds JESD 22**
  - **2000-V Human-Body Model (A114-A)**
  - **200-V Machine Model (A115-A)**
  - **1000-V Charged-Device Model (C101)**

description/ordering information

This 32-bit edge-triggered D-type flip-flop is operational at 0.8-V to 2.7-V V_{CC}, but is designed specifically for 1.65-V to 1.95-V V_{CC} operation.

The SN74AUCH32374 is particularly suitable for implementing buffer registers, I/O ports, bidirectional bus drivers, and working registers. It can be used as four 8-bit flip-flops, two 16-bit flip-flops, or one 32-bit flip-flop. On the positive transition of the clock (CLK) input, the Q outputs of the flip-flop take on the logic levels set up at the data (D) inputs.

A buffered output-enable ($\overline{OE}$) input can be used to place the eight outputs in either a normal logic state (high or low logic levels) or the high-impedance state. In the high-impedance state, the outputs neither load nor drive the bus lines significantly. The high-impedance state and increased drive provide the capability to drive bus lines without interface or pullup components.

$\overline{OE}$ does not affect internal operations of the latch. Old data can be retained or new data can be entered while the outputs are in the high-impedance state.

To ensure the high-impedance state during power up or power down, $\overline{OE}$ should be tied to V_{CC} through a pullup resistor; the minimum value of the resistor is determined by the current-sinking capability of the driver.

Active bus-hold circuitry holds unused or undriven inputs at a valid logic state. Use of pullup or pulldown resistors with the bus-hold circuitry is not recommended.

This device is fully specified for partial-power-down applications using I_{off}. The I_{off} circuitry disables the outputs, preventing damaging current backflow through the device when it is powered down.

ORDERING INFORMATION

T_A	PACKAGE†		ORDERABLE PART NUMBER	TOP-SIDE MARKING
−40°C to 85°C	LFBGA − GKE	Tape and reel	SN74AUCH32374GKER	MK374

† Package drawings, standard packing quantities, thermal data, symbolization, and PCB design guidelines are available at www.ti.com/sc/package.

Please be aware that an important notice concerning availability, standard warranty, and use in critical applications of Texas Instruments semiconductor products and disclaimers thereto appears at the end of this data sheet.

Widebus+ is a trademark of Texas Instruments.

PRODUCTION DATA information is current as of publication date. Products conform to specifications per the terms of Texas Instruments standard warranty. Production processing does not necessarily include testing of all parameters.

Copyright © 2003, Texas Instruments Incorporated

GKE PACKAGE
(TOP VIEW)

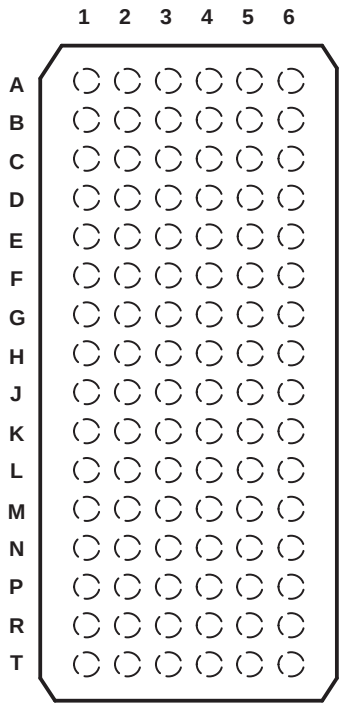

terminal assignments

	1	2	3	4	5	6
A	1Q2	1Q1	$1\overline{OE}$	1CLK	1D1	1D2
B	1Q4	1Q3	GND	GND	1D3	1D4
C	1Q6	1Q5	V_{CC}	V_{CC}	1D5	1D6
D	1Q8	1Q7	GND	GND	1D7	1D8
E	2Q2	2Q1	GND	GND	2D1	2D2
F	2Q4	2Q3	V_{CC}	V_{CC}	2D3	2D4
G	2Q6	2Q5	GND	GND	2D5	2D6
H	2Q7	2Q8	$2\overline{OE}$	2CLK	2D8	2D7
J	3Q2	3Q1	$3\overline{OE}$	3CLK	3D1	3D2
K	3Q4	3Q3	GND	GND	3D3	3D4
L	3Q6	3Q5	V_{CC}	V_{CC}	3D5	3D6
M	3Q8	3Q7	GND	GND	3D7	3D8
N	4Q2	4Q1	GND	GND	4D1	4D2
P	4Q4	4Q3	V_{CC}	V_{CC}	4D3	4D4
R	4Q6	4Q5	GND	GND	4D5	4D6
T	4Q7	4Q8	$4\overline{OE}$	4CLK	4D8	4D7

FUNCTION TABLE
(each flip-flop)

INPUTS			OUTPUT
$\overline{OE}$	CLK	D	Q
L	↑	H	H
L	↑	L	L
L	H or L	X	Q_0
H	X	X	Z

logic diagram (positive logic)

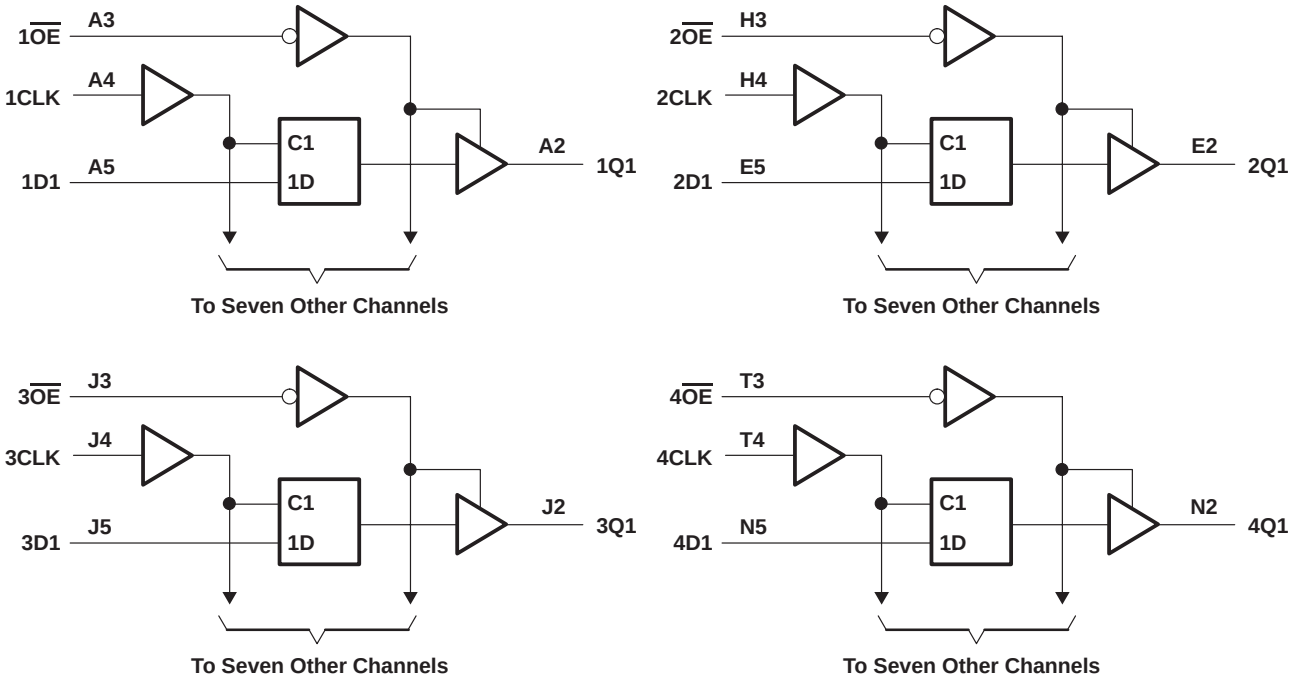

absolute maximum ratings over operating free-air temperature range (unless otherwise noted)†

Supply voltage range, V_{CC}	−0.5 V to 3.6 V
Input voltage range, V_I (see Note 1)	−0.5 V to 3.6 V
Voltage range applied to any output in the high-impedance or power-off state, V_O (see Note 1)	−0.5 V to 3.6 V
Output voltage range, V_O (see Note 1)	−0.5 V to V_{CC} + 0.5 V
Input clamp current, I_{IK} (V_I < 0)	−50 mA
Output clamp current, I_{OK} (V_O < 0)	−50 mA
Continuous output current, I_O	±20 mA
Continuous current through V_{CC} or GND	±100 mA
Package thermal impedance, θ_{JA} (see Note 2)	40°C/W
Storage temperature range, T_{stg}	−65°C to 150°C

† Stresses beyond those listed under “absolute maximum ratings” may cause permanent damage to the device. These are stress ratings only, and functional operation of the device at these or any other conditions beyond those indicated under “recommended operating conditions” is not implied. Exposure to absolute-maximum-rated conditions for extended periods may affect device reliability.

NOTES: 1. The input negative-voltage and output voltage ratings may be exceeded if the input and output current ratings are observed.
2. The package thermal impedance is calculated in accordance with JESD 51-7.

recommended operating conditions (see Note 3)

			MIN	MAX	UNIT
V_{CC}	Supply voltage		0.8	2.7	V
V_{IH}	High-level input voltage	V_{CC} = 0.8 V	V_{CC}		V
		V_{CC} = 1.1 V to 1.95 V	$0.65 \times V_{CC}$		
		V_{CC} = 2.3 V to 2.7 V	1.7		
V_{IL}	Low-level input voltage	V_{CC} = 0.8 V		0	V
		V_{CC} = 1.1 V to 1.95 V		$0.35 \times V_{CC}$	
		V_{CC} = 2.3 V to 2.7 V		0.7	
V_I	Input voltage		0	3.6	V
V_O	Output voltage	Active state	0	V_{CC}	V
		3-state	0	3.6	V
I_{OH}	High-level output current	V_{CC} = 0.8 V		−0.7	mA
		V_{CC} = 1.1 V		−3	
		V_{CC} = 1.4 V		−5	
		V_{CC} = 1.65 V		−8	
		V_{CC} = 2.3 V		−9	
I_{OL}	Low-level output current	V_{CC} = 0.8 V		0.7	mA
		V_{CC} = 1.1 V		3	
		V_{CC} = 1.4 V		5	
		V_{CC} = 1.65 V		8	
		V_{CC} = 2.3 V		9	
$\Delta t/\Delta v$	Input transition rise or fall rate			20	ns/V
T_A	Operating free-air temperature		−40	85	°C

NOTE 3: All unused control inputs of the device must be held at V_{CC} or GND to ensure proper device operation. Refer to the TI application report, *Implications of Slow or Floating CMOS Inputs*, literature number SCBA004.

electrical characteristics over recommended operating free-air temperature range (unless otherwise noted)

PARAMETER		TEST CONDITIONS	V_{CC}	MIN	TYP†	MAX	UNIT
V_{OH}		I_{OH} = −100 µA	0.8 V to 2.7 V	V_{CC}−0.1			V
		I_{OH} = −0.7 mA	0.8 V		0.55		
		I_{OH} = −3 mA	1.1 V	0.8			
		I_{OH} = −5 mA	1.4 V	1			
		I_{OH} = −8 mA	1.65 V	1.2			
		I_{OH} = −9 mA	2.3 V	1.8			
V_{OL}		I_{OL} = 100 µA	0.8 V to 2.7 V			0.2	V
		I_{OL} = 0.7 mA	0.8 V		0.25		
		I_{OL} = 3 mA	1.1 V			0.3	
		I_{OL} = 5 mA	1.4 V			0.4	
		I_{OL} = 8 mA	1.65 V			0.45	
		I_{OL} = 9 mA	2.3 V			0.6	
I_I	All inputs	V_I = V_{CC} or GND	0 to 2.7 V			±5	µA
I_{BHL}‡		V_I = 0.35 V	1.1 V	10			µA
		V_I = 0.47 V	1.4 V	15			
		V_I = 0.57 V	1.65 V	20			
		V_I = 0.7 V	2.3 V	40			
I_{BHH}§		V_I = 0.8 V	1.1 V	−5			µA
		V_I = 0.9 V	1.4 V	−15			
		V_I = 1.07 V	1.65 V	−20			
		V_I = 1.7 V	2.3 V	−40			
I_{BHLO}¶		V_I = 0 to V_{CC}	1.3 V	75			µA
			1.6 V	125			
			1.95 V	175			
			2.7 V	275			
I_{BHHO}#		V_I = 0 to V_{CC}	1.3 V	−75			µA
			1.6 V	−125			
			1.95 V	−175			
			2.7 V	−275			
I_{off}		V_I or V_O = 2.7 V	0			±10	µA
I_{OZ}		V_O = V_{CC} or GND	2.7 V			±10	µA
I_{CC}		V_I = V_{CC} or GND, I_O = 0	0.8 V to 2.7 V			40	µA
C_i		V_I = V_{CC} or GND	2.5 V		3		pF
C_o		V_O = V_{CC} or GND	2.5 V		5		pF

† All typical values are at T_A = 25°C.
‡ The bus-hold circuit can sink at least the minimum low sustaining current at V_{IL} max. I_{BHL} should be measured after lowering V_{IN} to GND and then raising it to V_{IL} max.
§ The bus-hold circuit can source at least the minimum high sustaining current at V_{IH} min. I_{BHH} should be measured after raising V_{IN} to V_{CC} and then lowering it to V_{IH} min.
¶ An external driver must source at least I_{BHLO} to switch this node from low to high.
# An external driver must sink at least I_{BHHO} to switch this node from high to low.

timing requirements over recommended operating free-air temperature range (unless otherwise noted) (see Figure 1)

		V_{CC} = 0.8 V	V_{CC} = 1.2 V ± 0.1 V		V_{CC} = 1.5 V ± 0.1 V		V_{CC} = 1.8 V ± 0.15 V		V_{CC} = 2.5 V ± 0.2 V		UNIT
		TYP	MIN	MAX	MIN	MAX	MIN	MAX	MIN	MAX	
f_{clock}	Clock frequency	85		250		250		250		250	MHz
t_w	Pulse duration, CLK high or low	5.9	1.9		1.9		1.9		1.9		ns
t_{su}	Setup time, data before CLK↑	1.4	1.2		0.7		0.6		0.6		ns
t_h	Hold time, data after CLK↑	0.1	0.4		0.4		0.4		0.4		ns

switching characteristics over recommended operating free-air temperature range (unless otherwise noted) (see Figure 1)

PARAMETER	FROM (INPUT)	TO (OUTPUT)	V_{CC} = 0.8 V	V_{CC} = 1.2 V ± 0.1 V		V_{CC} = 1.5 V ± 0.1 V		V_{CC} = 1.8 V ± 0.15 V			V_{CC} = 2.5 V ± 0.2 V		UNIT
			TYP	MIN	MAX	MIN	MAX	MIN	TYP	MAX	MIN	MAX	
f_{max}			85	250		250		250			250		MHz
t_{pd}	CLK	Q	7.3	1	4.5	0.8	2.9	0.7	1.5	2.8	0.7	2.2	ns
t_{en}	$\overline{OE}$	Q	7	1.2	5.3	0.8	3.6	0.8	1.5	2.9	0.7	2.2	ns
t_{dis}	$\overline{OE}$	Q	8.2	2	7.1	1	4.8	1.4	2.7	4.5	0.5	2.2	ns

operating characteristics, T_A = 25°C†

PARAMETER			TEST CONDITIONS	V_{CC} = 0.8 V	V_{CC} = 1.2 V	V_{CC} = 1.5 V	V_{CC} = 1.8 V	V_{CC} = 2.5 V	UNIT
				TYP	TYP	TYP	TYP	TYP	
C_{pd}‡ (each output)	Power dissipation capacitance	Outputs enabled, 1 output switching	1 f_{data} = 5 MHz 1 f_{clk} = 10 MHz 1 f_{out} = 5 MHz $\overline{OE}$ = GND C_L = 0 pF	24	24	24.1	26.2	31.2	pF
C_{pd} (Z)	Power dissipation capacitance	Outputs disabled, 1 clock and 1 data switching	1 f_{data} = 5 MHz 1 f_{clk} = 10 MHz f_{out} = not switching $\overline{OE}$ = V_{CC} C_L = 0 pF	7.5	7.5	8	9.4	13.2	pF
C_{pd}§ (each clock)	Power dissipation capacitance	Outputs disabled, clock only switching	1 f_{data} = 0 MHz 1 f_{clk} = 10 MHz f_{out} = not switching $\overline{OE}$ = V_{CC} C_L = 0 pF	13.8	13.8	14	14.7	17.5	pF

† Total device C_{pd} for multiple (n) outputs switching and (y) clocks inputs switching = {n * C_{pd} (each output)} + {y * C_{pd} (each clock)}.
‡ C_{pd} (each output) is the C_{pd} for each data bit (input and output circuitry) as it operates at 5 MHz (Note: the clock is operating at 10 MHz in this test, but its I_{CC} component has been subtracted out).
§ C_{pd} (each clock) is the C_{pd} for the clock circuitry only as it operates at 10 MHz.

PARAMETER MEASUREMENT INFORMATION

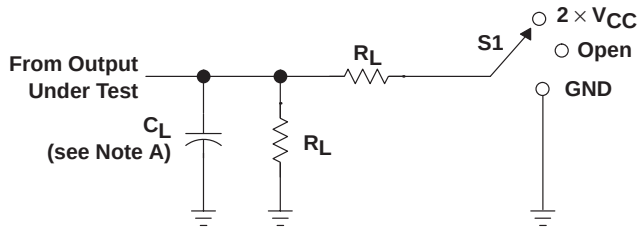

LOAD CIRCUIT

TEST	S1
t_{PLH}/t_{PHL}	Open
t_{PLZ}/t_{PZL}	$2 \times V_{CC}$
t_{PHZ}/t_{PZH}	GND

V_{CC}	C_L	R_L	V_Δ
0.8 V	15 pF	2 kΩ	0.1 V
1.2 V ± 0.1 V	15 pF	2 kΩ	0.1 V
1.5 V ± 0.1 V	15 pF	2 kΩ	0.1 V
1.8 V ± 0.15 V	30 pF	1 kΩ	0.15 V
2.5 V ± 0.2 V	30 pF	500 Ω	0.15 V

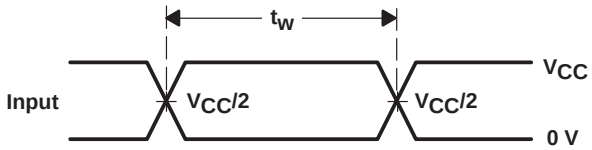

VOLTAGE WAVEFORMS
PULSE DURATION

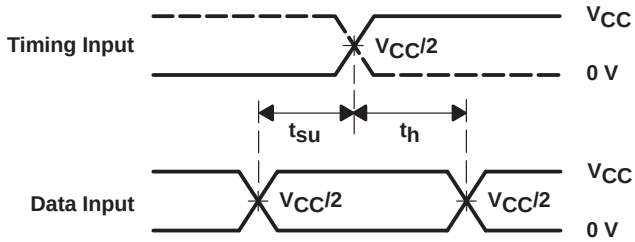

VOLTAGE WAVEFORMS
SETUP AND HOLD TIMES

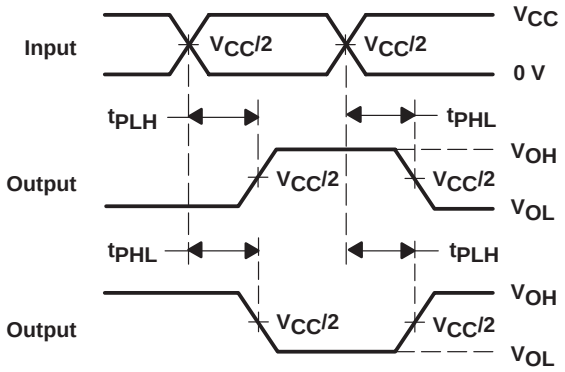

VOLTAGE WAVEFORMS
PROPAGATION DELAY TIMES
INVERTING AND NONINVERTING OUTPUTS

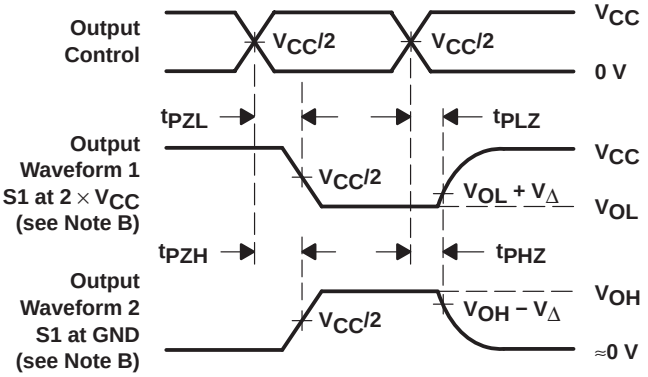

VOLTAGE WAVEFORMS
ENABLE AND DISABLE TIMES
LOW- AND HIGH-LEVEL ENABLING

NOTES:
A. C_L includes probe and jig capacitance.
B. Waveform 1 is for an output with internal conditions such that the output is low except when disabled by the output control. Waveform 2 is for an output with internal conditions such that the output is high except when disabled by the output control.
C. All input pulses are supplied by generators having the following characteristics: PRR ≤ 10 MHz, Z_O = 50 Ω, slew rate ≥ 1 V/ns.
D. The outputs are measured one at a time with one transition per measurement.
E. t_{PLZ} and t_{PHZ} are the same as t_{dis}.
F. t_{PZL} and t_{PZH} are the same as t_{en}.
G. t_{PLH} and t_{PHL} are the same as t_{pd}.
H. All parameters and waveforms are not applicable to all devices.

Figure 1. Load Circuit and Voltage Waveforms

PACKAGING INFORMATION

Orderable Device	Status (1)	Package Type	Package Drawing	Pins	Package Qty	Eco Plan (2)	Lead/Ball Finish (6)	MSL Peak Temp (3)	Op Temp (°C)	Device Marking (4/5)	Samples
SN74AUCH32374ZKER	ACTIVE	LFBGA	ZKE	96	1000	Green (RoHS & no Sb/Br)	SNAGCU	Level-3-260C-168 HR	-40 to 85	MK374	Samples

(1) The marketing status values are defined as follows:
ACTIVE: Product device recommended for new designs.
LIFEBUY: TI has announced that the device will be discontinued, and a lifetime-buy period is in effect.
NRND: Not recommended for new designs. Device is in production to support existing customers, but TI does not recommend using this part in a new design.
PREVIEW: Device has been announced but is not in production. Samples may or may not be available.
OBSOLETE: TI has discontinued the production of the device.

(2) Eco Plan - The planned eco-friendly classification: Pb-Free (RoHS), Pb-Free (RoHS Exempt), or Green (RoHS & no Sb/Br) - please check http://www.ti.com/productcontent for the latest availability information and additional product content details.
TBD: The Pb-Free/Green conversion plan has not been defined.
Pb-Free (RoHS): TI's terms "Lead-Free" or "Pb-Free" mean semiconductor products that are compatible with the current RoHS requirements for all 6 substances, including the requirement that lead not exceed 0.1% by weight in homogeneous materials. Where designed to be soldered at high temperatures, TI Pb-Free products are suitable for use in specified lead-free processes.
Pb-Free (RoHS Exempt): This component has a RoHS exemption for either 1) lead-based flip-chip solder bumps used between the die and package, or 2) lead-based die adhesive used between the die and leadframe. The component is otherwise considered Pb-Free (RoHS compatible) as defined above.
Green (RoHS & no Sb/Br): TI defines "Green" to mean Pb-Free (RoHS compatible), and free of Bromine (Br) and Antimony (Sb) based flame retardants (Br or Sb do not exceed 0.1% by weight in homogeneous material)

(3) MSL, Peak Temp. - The Moisture Sensitivity Level rating according to the JEDEC industry standard classifications, and peak solder temperature.

(4) There may be additional marking, which relates to the logo, the lot trace code information, or the environmental category on the device.

(5) Multiple Device Markings will be inside parentheses. Only one Device Marking contained in parentheses and separated by a "~" will appear on a device. If a line is indented then it is a continuation of the previous line and the two combined represent the entire Device Marking for that device.

(6) Lead/Ball Finish - Orderable Devices may have multiple material finish options. Finish options are separated by a vertical ruled line. Lead/Ball Finish values may wrap to two lines if the finish value exceeds the maximum column width.

Important Information and Disclaimer: The information provided on this page represents TI's knowledge and belief as of the date that it is provided. TI bases its knowledge and belief on information provided by third parties, and makes no representation or warranty as to the accuracy of such information. Efforts are underway to better integrate information from third parties. TI has taken and continues to take reasonable steps to provide representative and accurate information but may not have conducted destructive testing or chemical analysis on incoming materials and chemicals. TI and TI suppliers consider certain information to be proprietary, and thus CAS numbers and other limited information may not be available for release.

In no event shall TI's liability arising out of such information exceed the total purchase price of the TI part(s) at issue in this document sold by TI to Customer on an annual basis.

TAPE AND REEL INFORMATION

REEL DIMENSIONS

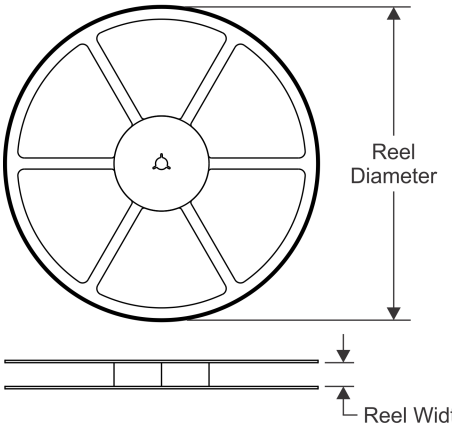

TAPE DIMENSIONS

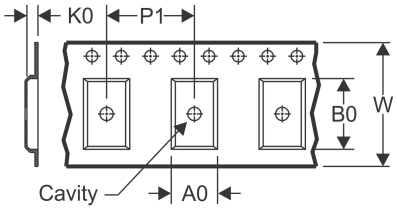

A0	Dimension designed to accommodate the component width
B0	Dimension designed to accommodate the component length
K0	Dimension designed to accommodate the component thickness
W	Overall width of the carrier tape
P1	Pitch between successive cavity centers

QUADRANT ASSIGNMENTS FOR PIN 1 ORIENTATION IN TAPE

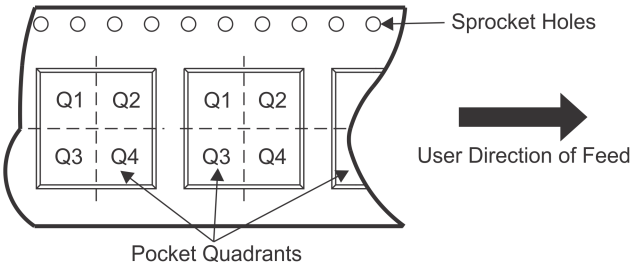

*All dimensions are nominal

Device	Package Type	Package Drawing	Pins	SPQ	Reel Diameter (mm)	Reel Width W1 (mm)	A0 (mm)	B0 (mm)	K0 (mm)	P1 (mm)	W (mm)	Pin1 Quadrant
SN74AUCH32374ZKER	LFBGA	ZKE	96	1000	330.0	24.4	5.7	13.7	2.0	8.0	24.0	Q1

TAPE AND REEL BOX DIMENSIONS

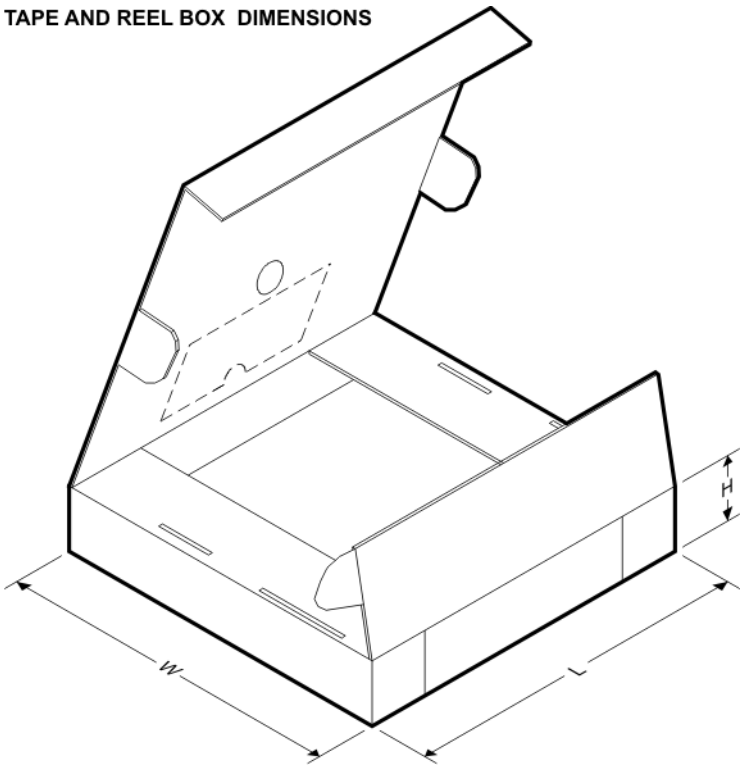

*All dimensions are nominal

Device	Package Type	Package Drawing	Pins	SPQ	Length (mm)	Width (mm)	Height (mm)
SN74AUCH32374ZKER	LFBGA	ZKE	96	1000	336.6	336.6	41.3

ZKE (R–PBGA–N96) PLASTIC BALL GRID ARRAY

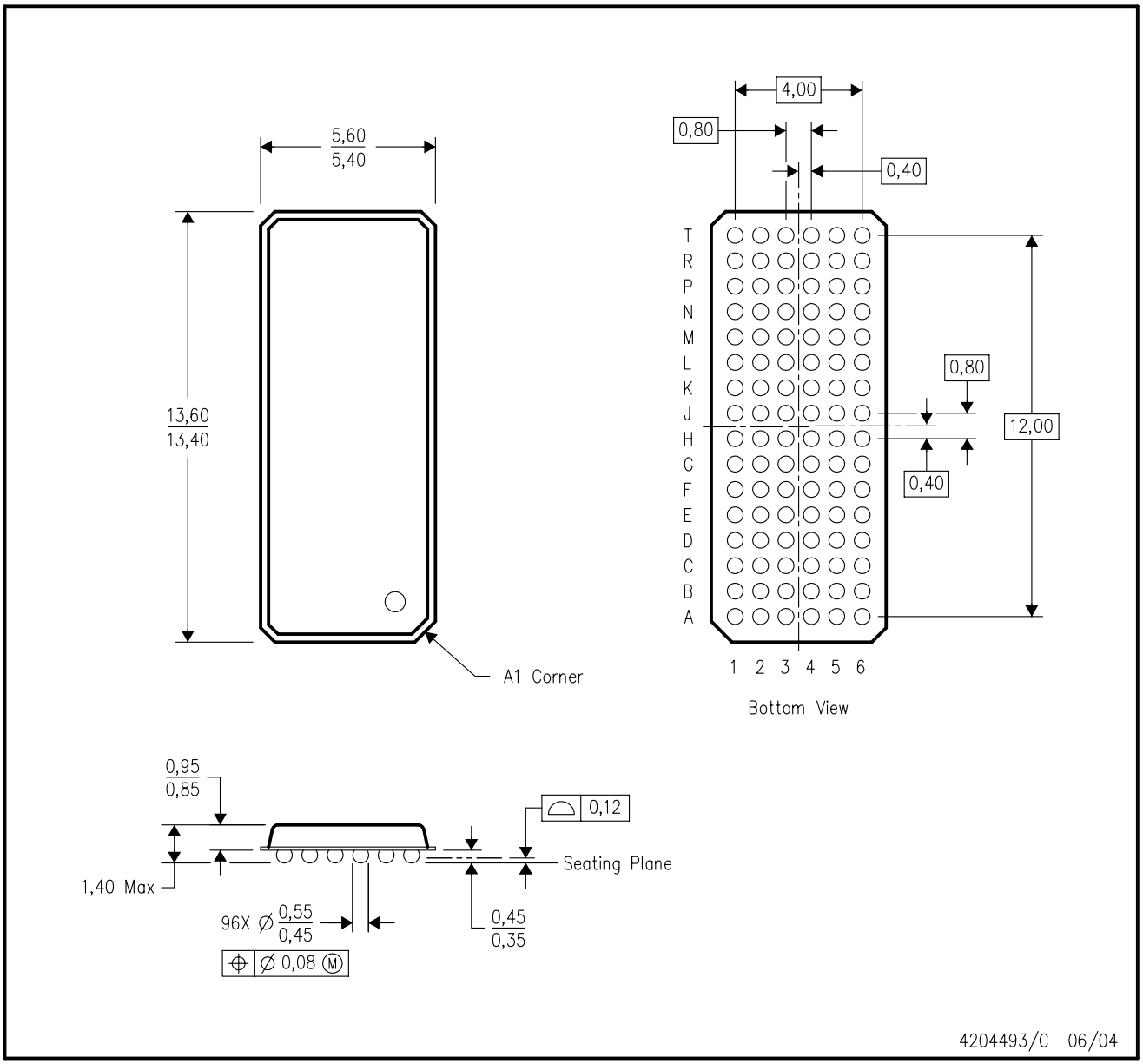

NOTES:
A. All linear dimensions are in millimeters.
B. This drawing is subject to change without notice.
C. Falls within JEDEC MO–205 variation CC.
D. This package is lead–free. Refer to the 96 GKE package (drawing 4188953) for tin–lead (SnPb).

IMPORTANT NOTICE AND DISCLAIMER

TI PROVIDES TECHNICAL AND RELIABILITY DATA (INCLUDING DATASHEETS), DESIGN RESOURCES (INCLUDING REFERENCE DESIGNS), APPLICATION OR OTHER DESIGN ADVICE, WEB TOOLS, SAFETY INFORMATION, AND OTHER RESOURCES “AS IS” AND WITH ALL FAULTS, AND DISCLAIMS ALL WARRANTIES, EXPRESS AND IMPLIED, INCLUDING WITHOUT LIMITATION ANY IMPLIED WARRANTIES OF MERCHANTABILITY, FITNESS FOR A PARTICULAR PURPOSE OR NON-INFRINGEMENT OF THIRD PARTY INTELLECTUAL PROPERTY RIGHTS.

These resources are intended for skilled developers designing with TI products. You are solely responsible for (1) selecting the appropriate TI products for your application, (2) designing, validating and testing your application, and (3) ensuring your application meets applicable standards, and any other safety, security, or other requirements. These resources are subject to change without notice. TI grants you permission to use these resources only for development of an application that uses the TI products described in the resource. Other reproduction and display of these resources is prohibited. No license is granted to any other TI intellectual property right or to any third party intellectual property right. TI disclaims responsibility for, and you will fully indemnify TI and its representatives against, any claims, damages, costs, losses, and liabilities arising out of your use of these resources.

TI’s products are provided subject to TI’s Terms of Sale (www.ti.com/legal/termsofsale.html) or other applicable terms available either on ti.com or provided in conjunction with such TI products. TI’s provision of these resources does not expand or otherwise alter TI’s applicable warranties or warranty disclaimers for TI products.

Mailing Address: Texas Instruments, Post Office Box 655303, Dallas, Texas 75265
Copyright © 2019, Texas Instruments Incorporated