- **Bidirectional Bus Transceivers in High-Density 20-Pin Packages**
- **Choice of True or Inverting Logic**
- **Package Options Include Plastic Small-Outline (DW) Packages and Standard Plastic (N) 300-mil DIPs**

DEVICE	LOGIC
SN74ALS641A, SN74AS641	True
SN74ALS642A	Inverting

DW OR N PACKAGE
(TOP VIEW)

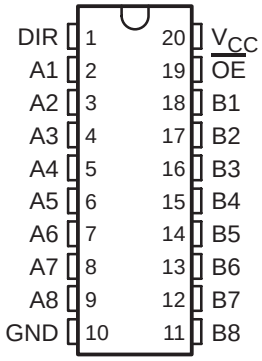

description

These octal bus transceivers are designed for asynchronous two-way communication between data buses. These devices transmit data from the A bus to the B bus or from the B bus to the A bus, depending upon the level at the direction-control (DIR) input. The output-enable ($\overline{OE}$) input disables the device so that the buses are effectively isolated.

The -1 versions of the SN74ALS641A and SN74ALS642A are identical to the standard versions, except that the recommended maximum I_{OL} is increased to 48 mA in the -1 versions.

The SN74ALS641A, SN74ALS642A, and SN74AS641 are characterized for operation from 0°C to 70°C.

FUNCTION TABLE

INPUTS		OPERATION	
$\overline{OE}$	DIR	SN74ALS641A SN74AS641	SN74ALS642A
L	L	B data to A bus	$\overline{B}$ data to A bus
L	H	A data to B bus	$\overline{A}$ data to B bus
H	X	Isolation	Isolation

PRODUCTION DATA information is current as of publication date. Products conform to specifications per the terms of Texas Instruments standard warranty. Production processing does not necessarily include testing of all parameters.

Copyright © 1995, Texas Instruments Incorporated

TEXAS INSTRUMENTS
POST OFFICE BOX 655303 • DALLAS, TEXAS 75265
POST OFFICE BOX 1443 • HOUSTON, TEXAS 77251−1443

logic symbols†

SN74ALS641A, SN74AS641

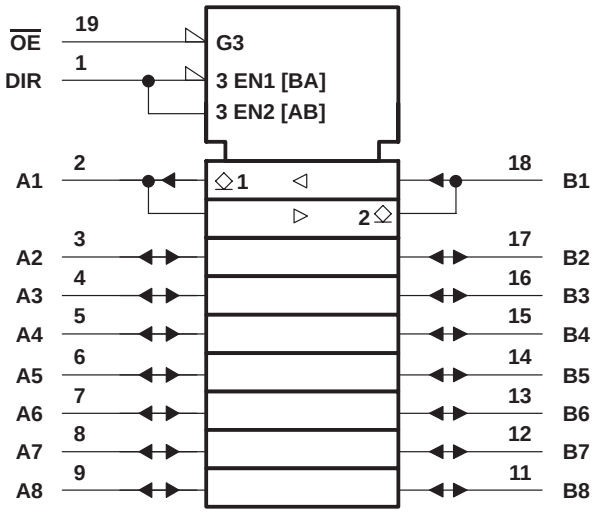

SN74ALS642A

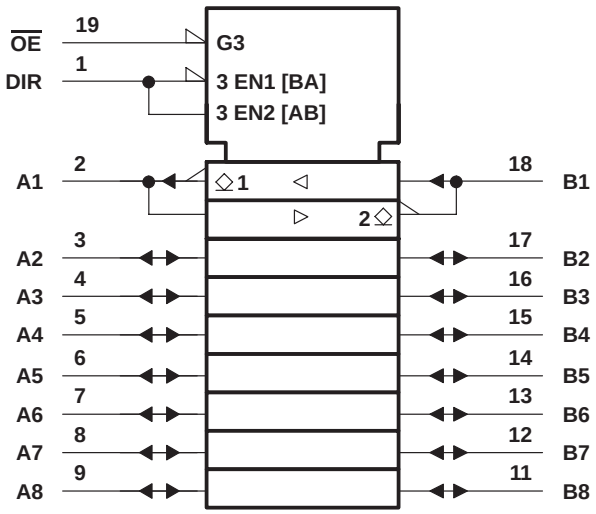

† These symbols are in accordance with ANSI/IEEE Std 91-1984 and IEC Publication 617-12.

logic diagrams (positive logic)

SN74ALS641A, SN74AS641

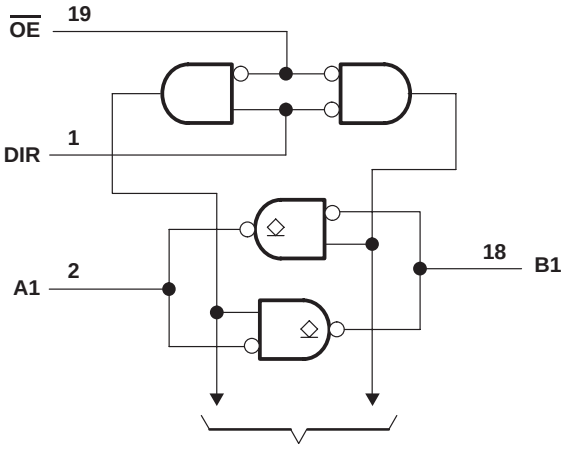

SN74ALS642A

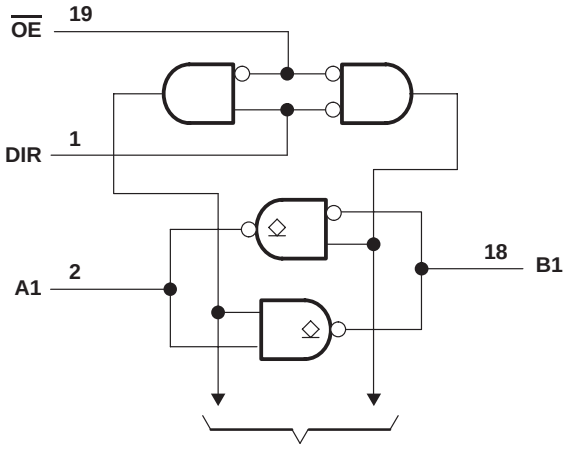

absolute maximum ratings over operating free-air temperature range (unless otherwise noted)†

Supply voltage, V_{CC} . . . . . 7 V
Input voltage, V_I: All inputs and I/O ports . . . . . 7 V
Operating free-air temperature range, T_A: SN74ALS641A, SN74ALS642A . . . . . 0°C to 70°C
Storage temperature range . . . . . −65°C to 150°C

† Stresses beyond those listed under “absolute maximum ratings” may cause permanent damage to the device. These are stress ratings only, and functional operation of the device at these or any other conditions beyond those indicated under “recommended operating conditions” is not implied. Exposure to absolute-maximum-rated conditions for extended periods may affect device reliability.

recommended operating conditions

		SN74ALS641A SN74ALS642A			UNIT
		MIN	NOM	MAX	
V_{CC}	Supply voltage	4.5	5	5.5	V
V_{IH}	High-level input voltage	2			V
V_{IL}	Low-level input voltage			0.8	V
V_{OH}	High-level output voltage			5.5	V
I_{OL}	Low-level output current			24	mA
				48‡	
T_A	Operating free-air temperature	0		70	°C

‡ Applies only to the -1 version and only if V_{CC} is between 4.75 V and 5.25 V

electrical characteristics over recommended operating free-air temperature range (unless otherwise noted)

PARAMETER		TEST CONDITIONS		SN74ALS641A SN74ALS642A MIN	TYP†	MAX	UNIT
V_{IK}		V_{CC} = 4.5 V,	I_I = −18 mA			−1.5	V
I_{OH}		V_{CC} = 4.5 V,	V_{OH} = 5.5 V			0.1	mA
V_{OL}		V_{CC} = 4.5 V	I_{OL} = 12 mA		0.25	0.4	V
			I_{OL} = 24 mA		0.35	0.5	
			I_{OL} = 48 mA‡		0.35	0.5	
I_I	Control inputs	V_{CC} = 5.5 V,	V_I = 7 V			0.1	mA
I_{IH}	Control inputs	V_{CC} = 5.5 V,	V_I = 2.7 V			20	µA
	A or B ports§					20	
I_{IL}	Control inputs	V_{CC} = 5.5 V,	V_I = 0.4 V			−0.1	mA
	A or B ports§					−0.1	
I_{CC}	SN74ALS641A	V_{CC} = 5.5 V	Outputs high		25	37	mA
			Outputs low		33	47	
	SN74ALS642A	V_{CC} = 5.5 V	Outputs high		8	15	
			Outputs low		18	28	

† All typical values are at V_{CC} = 5 V, T_A = 25°C.
‡ Applies only to the -1 version and only if V_{CC} is between 4.75 V and 5.25 V
§ For I/O ports, the parameters I_{IH} and I_{IL} include the off-state output current.

switching characteristics (see Figure 1)

PARAMETER	FROM (INPUT)	TO (OUTPUT)	V_{CC} = 4.5 V to 5.5 V, C_L = 50 pF, R_L = 680 Ω, T_A = MIN to MAX¶ SN74ALS641A MIN	SN74ALS641A MAX	SN74ALS642A MIN	SN74ALS642A MAX	UNIT
t_{PLH}	A or B	B or A	5	25	10	30	ns
t_{PHL}			3	18	5	22	
t_{PLH}	$\overline{OE}$	A or B	8	30	10	30	ns
t_{PHL}			8	30	15	38	
t_{PLH}	DIR	A or B	8	32	10	30	ns
t_{PHL}			8	32	15	38	

¶ For conditions shown as MIN or MAX, use the appropriate value specified under recommended operating conditions.

absolute maximum ratings over operating free-air temperature range (unless otherwise noted)†

Supply voltage, V_{CC} . . . . . 7 V
Input voltage, V_I: All inputs and I/O ports . . . . . 7 V
Operating free-air temperature range, T_A: SN74AS641 . . . . . 0°C to 70°C
Storage temperature range . . . . . −65°C to 150°C

† Stresses beyond those listed under “absolute maximum ratings” may cause permanent damage to the device. These are stress ratings only, and functional operation of the device at these or any other conditions beyond those indicated under “recommended operating conditions” is not implied. Exposure to absolute-maximum-rated conditions for extended periods may affect device reliability.

recommended operating conditions

		SN74AS641			UNIT
		MIN	NOM	MAX	
V_{CC}	Supply voltage	4.5	5	5.5	V
V_{IH}	High-level input voltage	2			V
V_{IL}	Low-level input voltage			0.8	V
V_{OH}	High-level output voltage			5.5	V
I_{OL}	Low-level output current			64	mA
T_A	Operating free-air temperature	0		70	°C

electrical characteristics over recommended operating free-air temperature range (unless otherwise noted)

PARAMETER		TEST CONDITIONS		SN74AS641			UNIT
				MIN	TYP‡	MAX	
V_{IK}		V_{CC} = 4.5 V,	I_I = −18 mA			−1.2	V
I_{OH}		V_{CC} = 4.5 V,	V_{OH} = 5.5 V			0.1	mA
V_{OL}		V_{CC} = 4.5 V,	I_{OL} = 64 mA		0.35	0.55	V
I_I	Control inputs	V_{CC} = 5.5 V	V_I = 7 V			0.1	mA
	A or B ports		V_I = 5.5 V			0.1	
I_{IH}	Control inputs	V_{CC} = 5.5 V,	V_I = 2.7 V			20	µA
	A or B ports§					70	
I_{IL}	Control inputs	V_{CC} = 5.5 V,	V_I = 0.4 V			−0.5	mA
	A or B ports§					−0.75	
I_{CC}		V_{CC} = 5.5 V	Outputs high		50	82	mA
			Outputs low		84	136	

‡ All typical values are at V_{CC} = 5 V, T_A = 25°C.
§ For I/O ports, the parameters I_{IH} and I_{IL} include the off-state output current.

switching characteristics (see Figure 1)

PARAMETER	FROM (INPUT)	TO (OUTPUT)	V_{CC} = 4.5 V to 5.5 V, C_L = 50 pF, R_L = 680 Ω, T_A = MIN to MAX†		UNIT
			SN74AS641		
			MIN	MAX	
t_{PLH}	A or B	B or A	5	21	ns
t_{PHL}			1	7.5	
t_{PLH}	$\overline{OE}$	A or B	5	21	ns
t_{PHL}			1	9	
t_{PLH}	DIR	A or B	5	22	ns
t_{PHL}			1	10	

† For conditions shown as MIN or MAX, use the appropriate value specified under recommended operating conditions.

PARAMETER MEASUREMENT INFORMATION
SERIES 54ALS/74ALS AND 54AS/74AS DEVICES

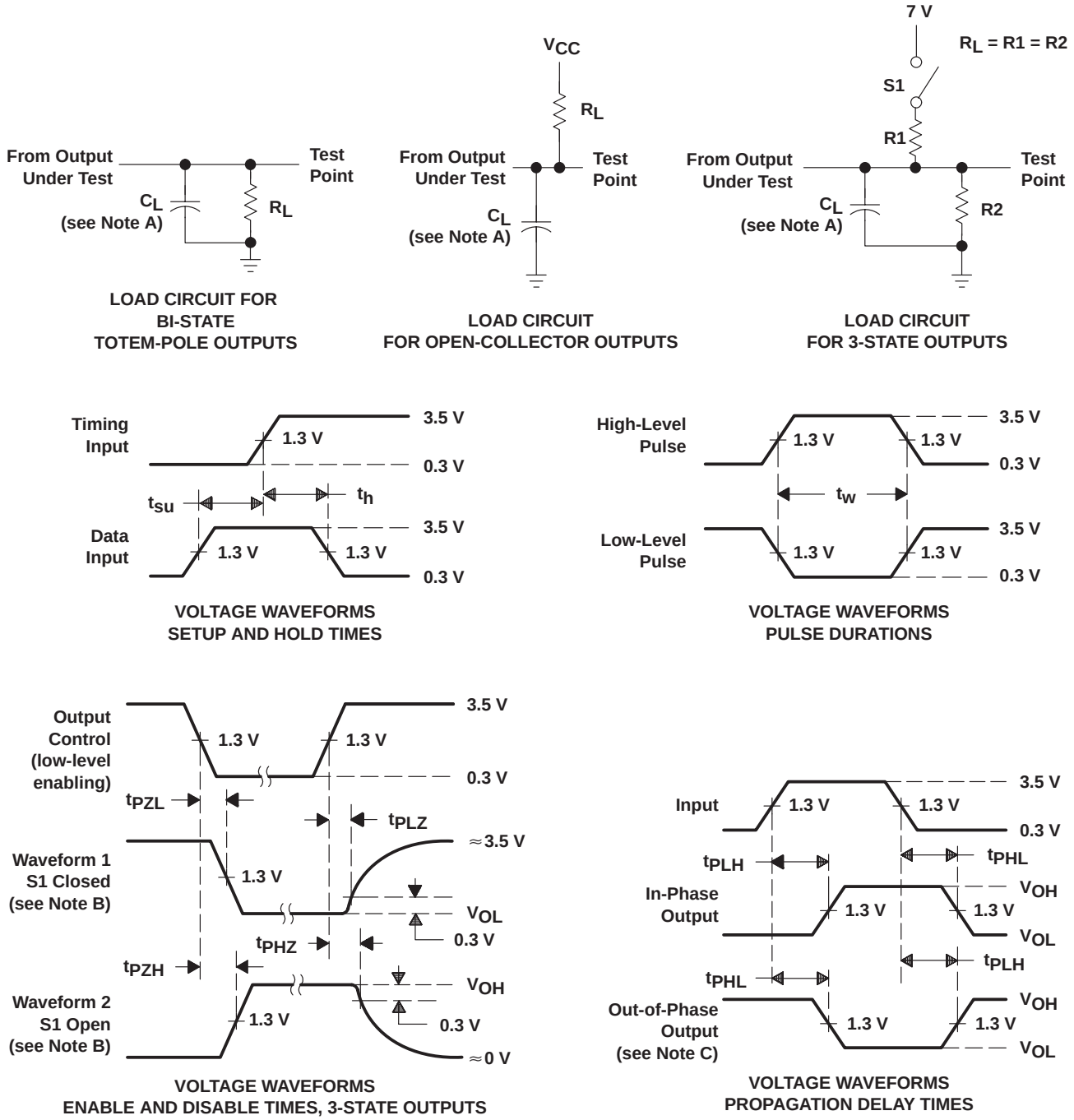

NOTES: A. C_L includes probe and jig capacitance.
B. Waveform 1 is for an output with internal conditions such that the output is low except when disabled by the output control. Waveform 2 is for an output with internal conditions such that the output is high except when disabled by the output control.
C. When measuring propagation delay items of 3-state outputs, switch S1 is open.
D. All input pulses have the following characteristics: PRR ≤ 1 MHz, $t_r = t_f$ = 2 ns, duty cycle = 50%.
E. The outputs are measured one at a time with one transition per measurement.

Figure 1. Load Circuits and Voltage Waveforms

PACKAGING INFORMATION

Orderable Device	Status (1)	Package Type	Package Drawing	Pins	Package Qty	Eco Plan (2)	Lead/Ball Finish (6)	MSL Peak Temp (3)	Op Temp (°C)	Device Marking (4/5)	Samples
SN74ALS641A-1DW	ACTIVE	SOIC	DW	20	25	Green (RoHS & no Sb/Br)	CU NIPDAU	Level-1-260C-UNLIM	0 to 70	ALS641A-1	Samples
SN74ALS641A-1DWR	ACTIVE	SOIC	DW	20	2000	Green (RoHS & no Sb/Br)	CU NIPDAU	Level-1-260C-UNLIM	0 to 70	ALS641A-1	Samples
SN74ALS641A-1N	ACTIVE	PDIP	N	20	20	Pb-Free (RoHS)	CU NIPDAU	N / A for Pkg Type	0 to 70	SN74ALS641A-1N	Samples
SN74ALS641A-1NSR	ACTIVE	SO	NS	20	2000	Green (RoHS & no Sb/Br)	CU NIPDAU	Level-1-260C-UNLIM	0 to 70	ALS641A-1	Samples
SN74ALS641ADW	ACTIVE	SOIC	DW	20	25	Green (RoHS & no Sb/Br)	CU NIPDAU	Level-1-260C-UNLIM	0 to 70	ALS641A	Samples
SN74ALS641ADWR	ACTIVE	SOIC	DW	20	2000	Green (RoHS & no Sb/Br)	CU NIPDAU	Level-1-260C-UNLIM	0 to 70	ALS641A	Samples
SN74ALS641AN	ACTIVE	PDIP	N	20	20	Pb-Free (RoHS)	CU NIPDAU	N / A for Pkg Type	0 to 70	SN74ALS641AN	Samples
SN74ALS641ANSR	ACTIVE	SO	NS	20	2000	Green (RoHS & no Sb/Br)	CU NIPDAU	Level-1-260C-UNLIM	0 to 70	ALS641A	Samples
SN74ALS642A-1DW	ACTIVE	SOIC	DW	20	25	Green (RoHS & no Sb/Br)	CU NIPDAU	Level-1-260C-UNLIM	0 to 70	ALS642A-1	Samples
SN74ALS642A-1N	ACTIVE	PDIP	N	20	20	Pb-Free (RoHS)	CU NIPDAU	N / A for Pkg Type	0 to 70	SN74ALS642A-1N	Samples
SN74ALS642A-1NSR	ACTIVE	SO	NS	20	2000	Green (RoHS & no Sb/Br)	CU NIPDAU	Level-1-260C-UNLIM	0 to 70	ALS642A-1	Samples
SN74AS641DW	ACTIVE	SOIC	DW	20	25	Green (RoHS & no Sb/Br)	CU NIPDAU	Level-1-260C-UNLIM	0 to 70	AS641	Samples
SN74AS641N	ACTIVE	PDIP	N	20	20	Pb-Free (RoHS)	CU NIPDAU	N / A for Pkg Type	0 to 70	SN74AS641N	Samples

(1) The marketing status values are defined as follows:
ACTIVE: Product device recommended for new designs.
LIFEBUY: TI has announced that the device will be discontinued, and a lifetime-buy period is in effect.
NRND: Not recommended for new designs. Device is in production to support existing customers, but TI does not recommend using this part in a new design.
PREVIEW: Device has been announced but is not in production. Samples may or may not be available.
OBSOLETE: TI has discontinued the production of the device.

(2) **RoHS:** TI defines "RoHS" to mean semiconductor products that are compliant with the current EU RoHS requirements for all 10 RoHS substances, including the requirement that RoHS substance do not exceed 0.1% by weight in homogeneous materials. Where designed to be soldered at high temperatures, "RoHS" products are suitable for use in specified lead-free processes. TI may reference these types of products as "Pb-Free".
RoHS Exempt: TI defines "RoHS Exempt" to mean products that contain lead but are compliant with EU RoHS pursuant to a specific EU RoHS exemption.
Green: TI defines "Green" to mean the content of Chlorine (Cl) and Bromine (Br) based flame retardants meet JS709B low halogen requirements of <=1000ppm threshold. Antimony trioxide based flame retardants must also meet the <=1000ppm threshold requirement.

(3) MSL, Peak Temp. - The Moisture Sensitivity Level rating according to the JEDEC industry standard classifications, and peak solder temperature.

(4) There may be additional marking, which relates to the logo, the lot trace code information, or the environmental category on the device.

(5) Multiple Device Markings will be inside parentheses. Only one Device Marking contained in parentheses and separated by a "~" will appear on a device. If a line is indented then it is a continuation of the previous line and the two combined represent the entire Device Marking for that device.

(6) Lead/Ball Finish - Orderable Devices may have multiple material finish options. Finish options are separated by a vertical ruled line. Lead/Ball Finish values may wrap to two lines if the finish value exceeds the maximum column width.

Important Information and Disclaimer: The information provided on this page represents TI's knowledge and belief as of the date that it is provided. TI bases its knowledge and belief on information provided by third parties, and makes no representation or warranty as to the accuracy of such information. Efforts are underway to better integrate information from third parties. TI has taken and continues to take reasonable steps to provide representative and accurate information but may not have conducted destructive testing or chemical analysis on incoming materials and chemicals. TI and TI suppliers consider certain information to be proprietary, and thus CAS numbers and other limited information may not be available for release.

In no event shall TI's liability arising out of such information exceed the total purchase price of the TI part(s) at issue in this document sold by TI to Customer on an annual basis.

TAPE AND REEL INFORMATION

REEL DIMENSIONS

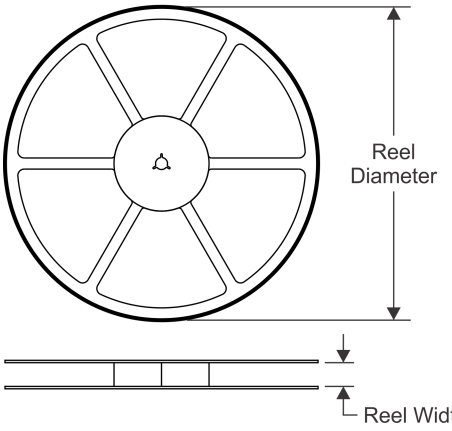

TAPE DIMENSIONS

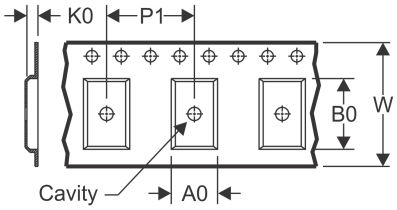

A0	Dimension designed to accommodate the component width
B0	Dimension designed to accommodate the component length
K0	Dimension designed to accommodate the component thickness
W	Overall width of the carrier tape
P1	Pitch between successive cavity centers

QUADRANT ASSIGNMENTS FOR PIN 1 ORIENTATION IN TAPE

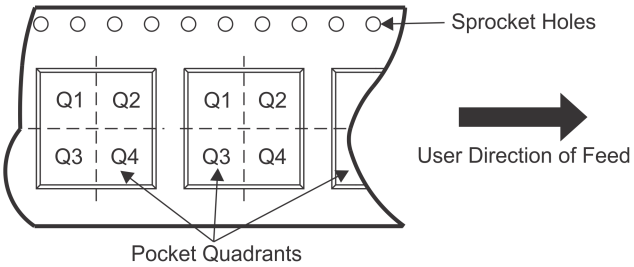

*All dimensions are nominal

Device	Package Type	Package Drawing	Pins	SPQ	Reel Diameter (mm)	Reel Width W1 (mm)	A0 (mm)	B0 (mm)	K0 (mm)	P1 (mm)	W (mm)	Pin1 Quadrant
SN74ALS641A-1DWR	SOIC	DW	20	2000	330.0	24.4	10.8	13.3	2.7	12.0	24.0	Q1
SN74ALS641A-1NSR	SO	NS	20	2000	330.0	24.4	8.4	13.0	2.5	12.0	24.0	Q1
SN74ALS641ADWR	SOIC	DW	20	2000	330.0	24.4	10.8	13.3	2.7	12.0	24.0	Q1
SN74ALS641ANSR	SO	NS	20	2000	330.0	24.4	8.4	13.0	2.5	12.0	24.0	Q1
SN74ALS642A-1NSR	SO	NS	20	2000	330.0	24.4	8.4	13.0	2.5	12.0	24.0	Q1

TAPE AND REEL BOX DIMENSIONS

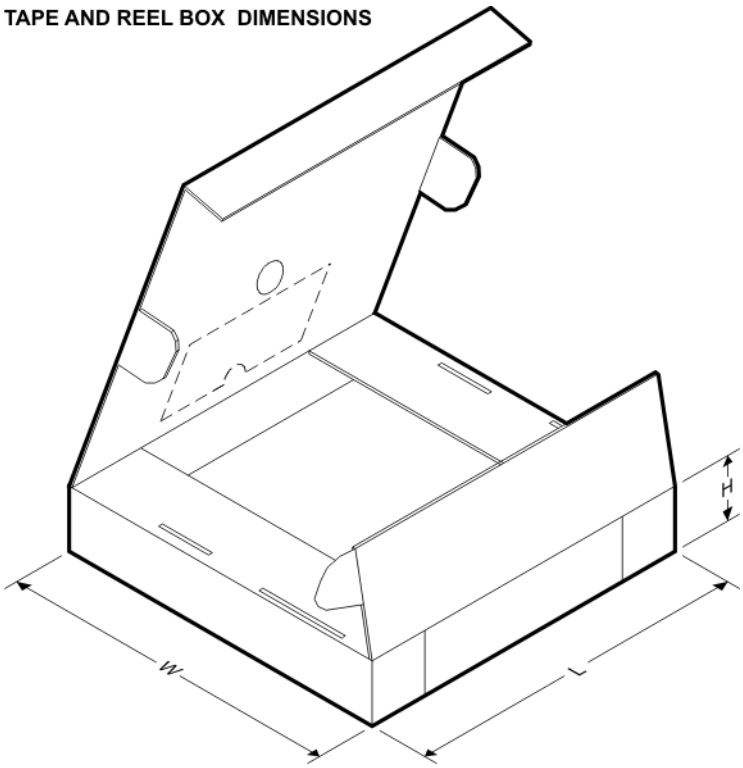

*All dimensions are nominal

Device	Package Type	Package Drawing	Pins	SPQ	Length (mm)	Width (mm)	Height (mm)
SN74ALS641A-1DWR	SOIC	DW	20	2000	367.0	367.0	45.0
SN74ALS641A-1NSR	SO	NS	20	2000	367.0	367.0	45.0
SN74ALS641ADWR	SOIC	DW	20	2000	367.0	367.0	45.0
SN74ALS641ANSR	SO	NS	20	2000	367.0	367.0	45.0
SN74ALS642A-1NSR	SO	NS	20	2000	367.0	367.0	45.0

MECHANICAL DATA

NS (R-PDSO-G)** **PLASTIC SMALL-OUTLINE PACKAGE**

14-PINS SHOWN

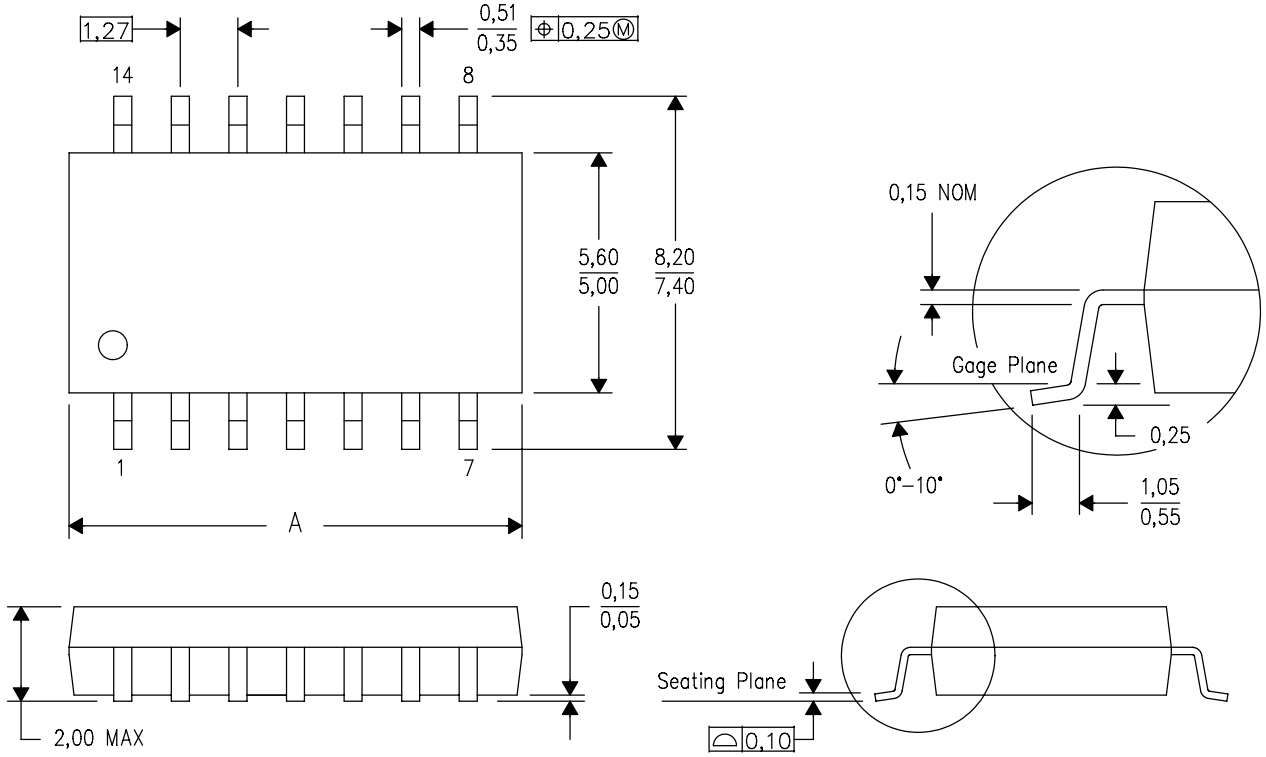

DIM \ PINS **	14	16	20	24
A MAX	10,50	10,50	12,90	15,30
A MIN	9,90	9,90	12,30	14,70

4040062/C 03/03

NOTES:
A. All linear dimensions are in millimeters.
B. This drawing is subject to change without notice.
C. Body dimensions do not include mold flash or protrusion, not to exceed 0,15.

N (R–PDIP–T**) PLASTIC DUAL–IN–LINE PACKAGE

16 PINS SHOWN

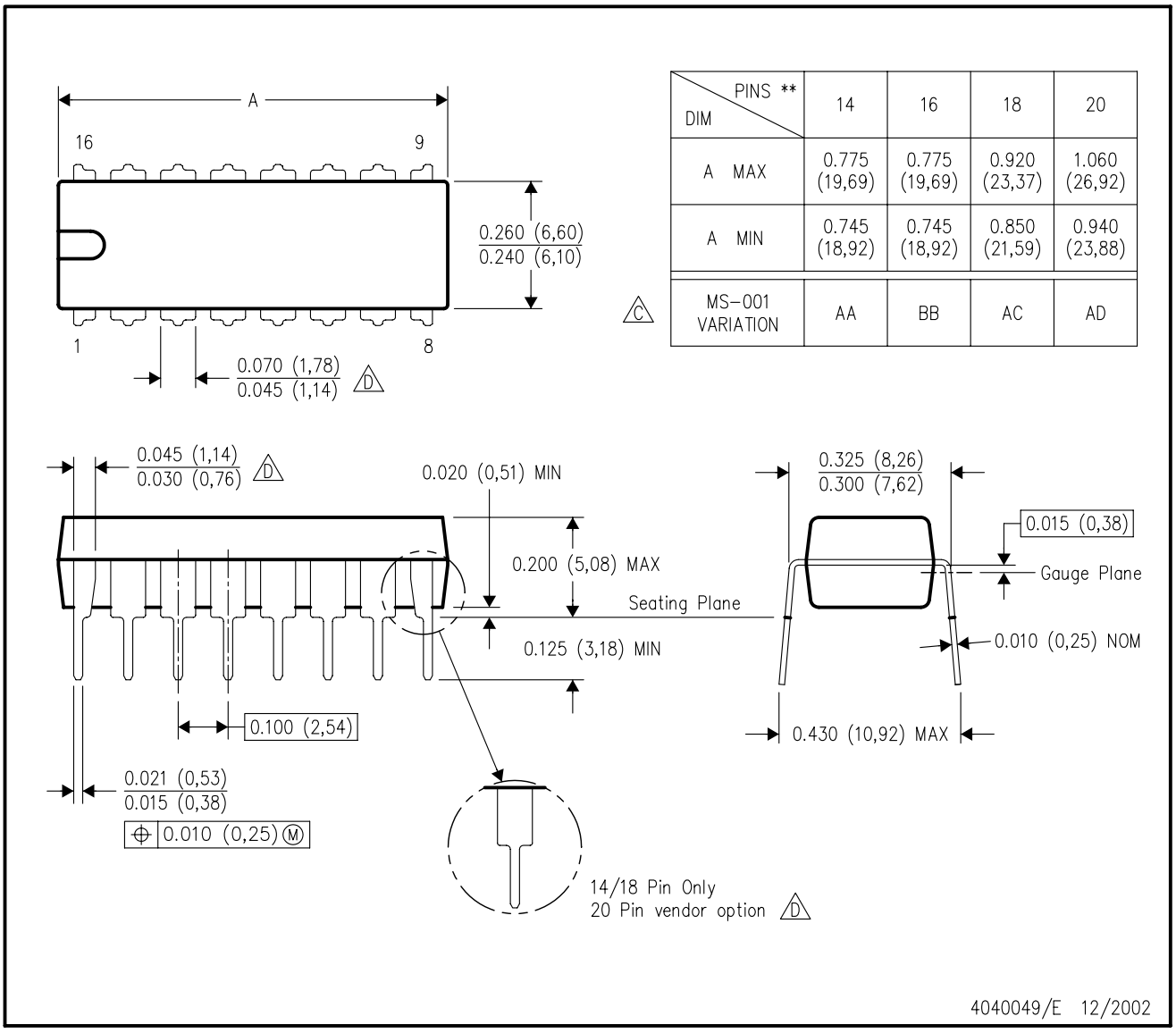

DIM \ PINS **	14	16	18	20
A MAX	0.775 (19,69)	0.775 (19,69)	0.920 (23,37)	1.060 (26,92)
A MIN	0.745 (18,92)	0.745 (18,92)	0.850 (21,59)	0.940 (23,88)
MS–001 VARIATION (C)	AA	BB	AC	AD

NOTES:
A. All linear dimensions are in inches (millimeters).
B. This drawing is subject to change without notice.
C. Falls within JEDEC MS–001, except 18 and 20 pin minimum body length (Dim A).
D. The 20 pin end lead shoulder width is a vendor option, either half or full width.

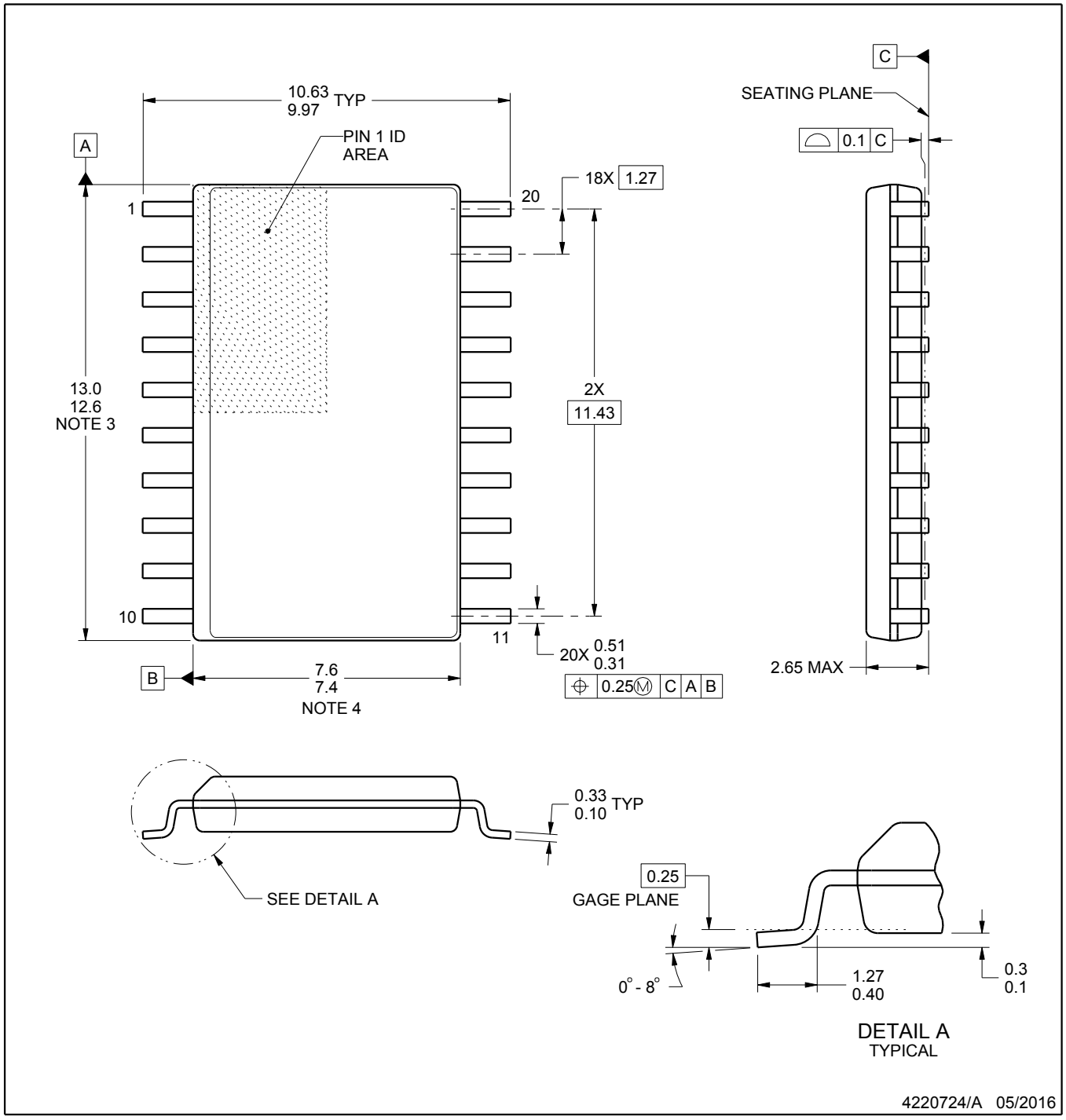

NOTES:

1. All linear dimensions are in millimeters. Dimensions in parenthesis are for reference only. Dimensioning and tolerancing per ASME Y14.5M.
2. This drawing is subject to change without notice.
3. This dimension does not include mold flash, protrusions, or gate burrs. Mold flash, protrusions, or gate burrs shall not exceed 0.15 mm per side.
4. This dimension does not include interlead flash. Interlead flash shall not exceed 0.43 mm per side.
5. Reference JEDEC registration MS-013.

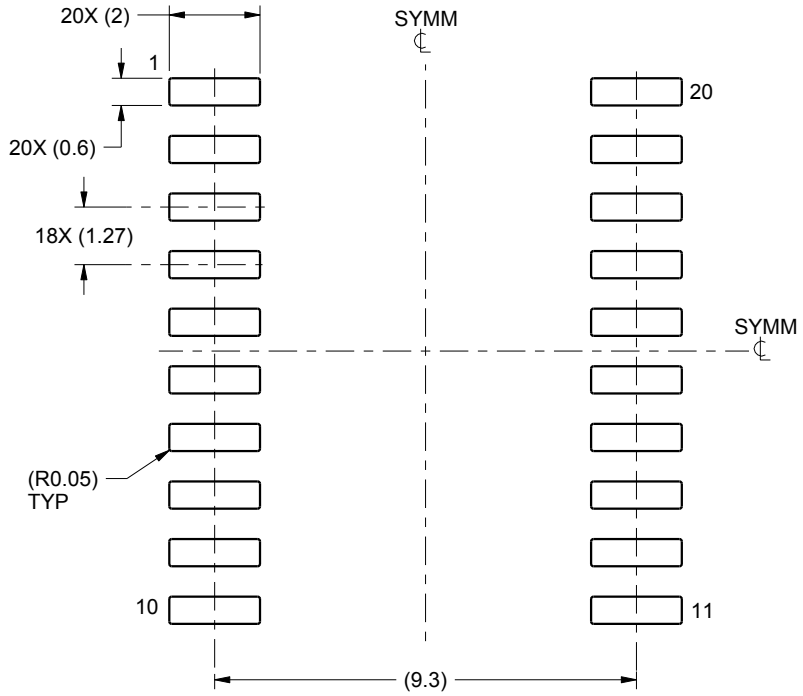

LAND PATTERN EXAMPLE
SCALE:6X

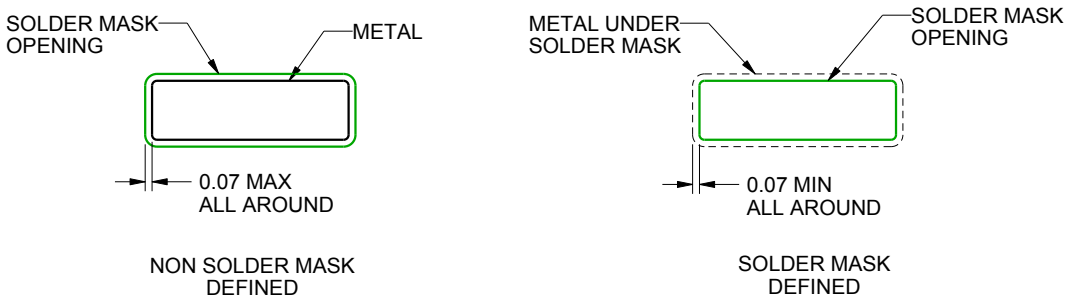

SOLDER MASK DETAILS

4220724/A 05/2016

NOTES: (continued)

6. Publication IPC-7351 may have alternate designs.
7. Solder mask tolerances between and around signal pads can vary based on board fabrication site.

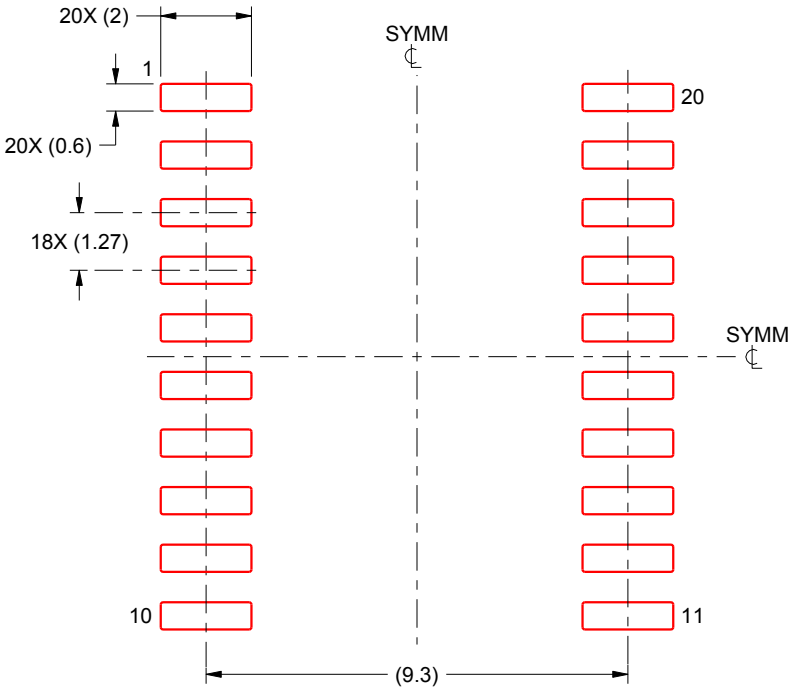

SOLDER PASTE EXAMPLE
BASED ON 0.125 mm THICK STENCIL
SCALE:6X

4220724/A 05/2016

NOTES: (continued)

8. Laser cutting apertures with trapezoidal walls and rounded corners may offer better paste release. IPC-7525 may have alternate design recommendations.
9. Board assembly site may have different recommendations for stencil design.

IMPORTANT NOTICE AND DISCLAIMER

TI PROVIDES TECHNICAL AND RELIABILITY DATA (INCLUDING DATASHEETS), DESIGN RESOURCES (INCLUDING REFERENCE DESIGNS), APPLICATION OR OTHER DESIGN ADVICE, WEB TOOLS, SAFETY INFORMATION, AND OTHER RESOURCES “AS IS” AND WITH ALL FAULTS, AND DISCLAIMS ALL WARRANTIES, EXPRESS AND IMPLIED, INCLUDING WITHOUT LIMITATION ANY IMPLIED WARRANTIES OF MERCHANTABILITY, FITNESS FOR A PARTICULAR PURPOSE OR NON-INFRINGEMENT OF THIRD PARTY INTELLECTUAL PROPERTY RIGHTS.

These resources are intended for skilled developers designing with TI products. You are solely responsible for (1) selecting the appropriate TI products for your application, (2) designing, validating and testing your application, and (3) ensuring your application meets applicable standards, and any other safety, security, or other requirements. These resources are subject to change without notice. TI grants you permission to use these resources only for development of an application that uses the TI products described in the resource. Other reproduction and display of these resources is prohibited. No license is granted to any other TI intellectual property right or to any third party intellectual property right. TI disclaims responsibility for, and you will fully indemnify TI and its representatives against, any claims, damages, costs, losses, and liabilities arising out of your use of these resources.

TI’s products are provided subject to TI’s Terms of Sale (www.ti.com/legal/termsofsale.html) or other applicable terms available either on ti.com or provided in conjunction with such TI products. TI’s provision of these resources does not expand or otherwise alter TI’s applicable warranties or warranty disclaimers for TI products.

Mailing Address: Texas Instruments, Post Office Box 655303, Dallas, Texas 75265
Copyright © 2019, Texas Instruments Incorporated