Si8540

HIGH-SIDE CURRENT SENSE AMPLIFIER

Features

- Complete, unidirectional high-side current sense capability
- 0.2% full-scale accuracy
- +5 to +36 V supply operation
- 85 dB power supply rejection
- 90 µA max supply current
- 9 µA shutdown current
- Operating Temperature Range: –40 to +85 °C
- 5-pin SOT-23 package
- RoHS-compliant

Applications

- Battery chargers
- Smart battery packs
- DC motor control
- Backup systems
- Current control applications

Description

The Si8540 is a unidirectional, 36 V (max), high-side current sense amplifier for use in applications requiring current monitoring and/or control. This device draws bias current from the high-side line to which it is attached, eliminating the need for an external supply. It measures current from 0.1 to 10 A by sensing the voltage across an external sense resistor (or PCB trace) from dc to 20 kHz and can achieve measurement accuracies of 0.2% (typical) at full load. The device output is a current signal proportional to measured current and is easily converted to a scaled voltage using a single external resistor. The Si8540 is available in compact SOT-23 package.

Functional Block Diagram

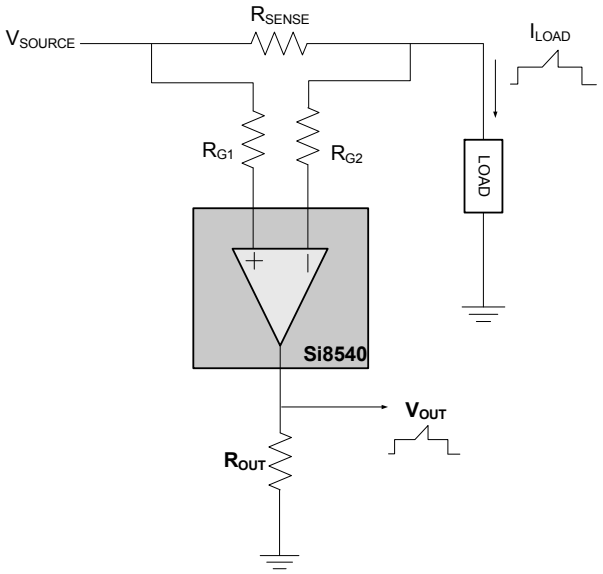

5-Pin SOT-23

Ordering Information:
See page 12.

Pin Assignments

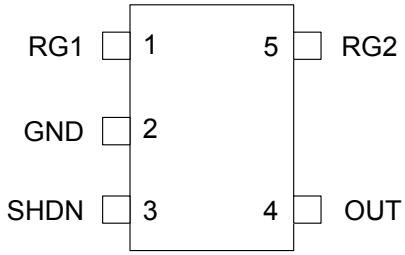

SOT-23

Patents pending

Copyright © 2013 by Silicon Laboratories

TABLE OF CONTENTS

Section	Page
1. Electrical Specifications	**4**
2. Typical Application Schematic	**6**
3. Functional Description	**7**
3.1. Application Information	7
4. Typical Performance Data	**9**
5. Pin Descriptions	**11**
6. Ordering Guide	**12**
6.1. Device Marking	13
7. Package Outline: SOT-23	**14**
8. Land Pattern: SOT-23	**15**
Document Change List	**16**
Contact Information	**18**

1. Electrical Specifications

Table 1. Absolute Maximum Ratings

Parameter	Value	Unit
Voltage at RG1, RG2, SHDN to GND	–0.3 to +40	V
Differential Input Voltage, RG1 to RG2	±0.3	V
Voltage at OUT	–0.3 to +8	V
Current into SHDN, GND, OUT, RG1, RG2	±50	mA
Continuous Power Dissipation (T_A = +70 °C) 5-pin SOT23 derate 7.1 mW/°C above +70 °C*	571	mW
Operating Temperature Range	–40 to +85	°C
Junction Temperature, T_{JMAX}	Up to +150	°C

***Note:** The device is mounted on a standard PCB with a 100 mm^2 copper foil connected to the GND pin, no airflow. Permanent device damage may occur if the absolute maximum ratings are exceeded, and prolonged use at the absolute maximum ratings may affect reliability. It is recommended that the device operate within the limits indicated in Table 2, “DC and AC Characteristics".

Table 2. DC and AC Characteristics
(Unless otherwise specified: V_{RG1} = +5 to +36 V, RG1 = RG2 = 200, V_{SENSE} = 0 V, T_A = –40 to +85 °C)

Parameter	Symbol	Test Condition	Min	Typ	Max	Unit
Operating Voltage	V_{RG1}		5	—	36	V
Operating Frequency	F		0	20	—	kHz
Total Input Current	I_{RG1}+I_{RG2}	I_{LOAD} = 0 A	—	46	90	µA
Input Currents	I_{RG1}, I_{RG2}	I_{LOAD} = 0 A	—	23	45	µA
Input Current Matching	I_{OS}	I_{RG1} – I_{RG2}	—	±0.4	±1.5	µA
Sense Voltage[1]	V_{SENSE}		—	100	—	mV
OUT Current Accuracy	I_{RG}/I_{OUT}	V_{SENSE} = 100 mV	—	±0.2	±1.5	%
No-Load OUT Error		V_{RG1} = 10 V, V_{SENSE} = 0 V	—	0.5	15	µA
Low-Level OUT Error		V_{RG1} = 10 V, V_{SENSE} = 3 mV	—	±0.5	±10	µA
Power-Supply Rejection	PSR	V_{SENSE} = 100 mV	—	-85	—	dB
Shutdown Supply Current	I_{RG1}+I_{RG2}	V_{SHDN} = 2.4 V	—	3.5	9	µA
SHDN Input Low Voltage	V_{IL}		—	—	0.3	V
SHDN Input Low Current	I_{IL}	V_{SHDN} = 0 V	—	—	1.0	µA
SHDN Input High Voltage	V_{IH}		2.4	—	—	V
SHDN Input High Current	I_{IH}	V_{SHDN} = 2.4 V	—	—	1.0	µA
OUT Output Voltage Range	V_{OUT}	V_{OUT} clamped at 8 V	0	—	V_{RG1} – 3.5 (<8)	V
OUT Output Resistance (Internal)		I_{OUT} = 1.5 mA	1	3	—	MΩ
OUT Rise, Fall Time		V_{SENSE} = 5 mV to 150 mV, R_{OUT} = 2 = kΩ, C_{OUT} = 50 pF, 10% to 90% (Note 2)	— —	0.4 0.5	— —	µs µs
OUT Settling Time to 1% of Final Value		V_{SENSE} = 5 to 150 mV, R_{OUT} = 2 kΩ, C_{OUT} = 50 pF (Note 2)	— —	1 2	— —	µs µs
Maximum Output Current	I_{OUT}	For I_{OUT} > 1.5 mA the internal current limitation starts to limit the output current	1.5	—	10	mA

Notes:
1. V_{SENSE} is the voltage across the sense resistor.
2. C_{OUT} is the load capacitance seen by the OUT pin.

2. Typical Application Schematic

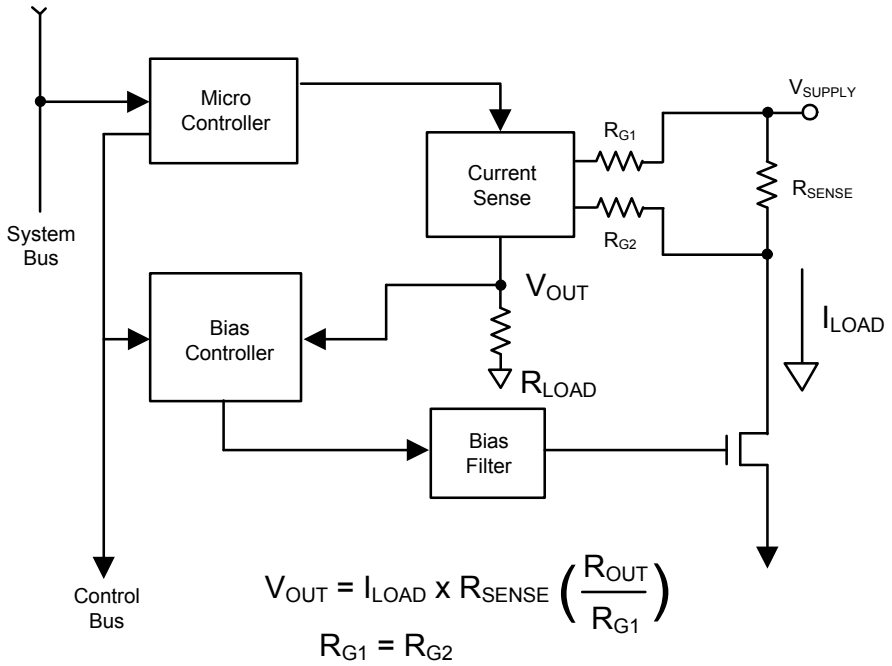

Figure 1. Connecting the Si8540 in a Power Control Application

3. Functional Description

The Si8540 is designed to operate over an input common-mode range of 5 to 36 V. Figure 2 shows an example Si8540 application with external sense resistor, R_{SENSE}, external current gain-setting resistors, R_{G1} and R_{G2}, and output scaling resistor, R_{OUT}. The supply current flowing into the Si8540 inverting and non-inverting inputs (R_{G1}, R_{G2}) is negligible compared to I_{LOAD} and, as a result, has no appreciable effect on measurement accuracy. The internal current sense amplifier measures the differential input voltage, V_{SENSE}, and generates an output current proportional to I_{LOAD}. Resistor R_{OUT} converts this current to a voltage, and its value determines the output signal gain. The Si8540 is placed in a low-power shutdown mode when SHDN is at V_{IH}.

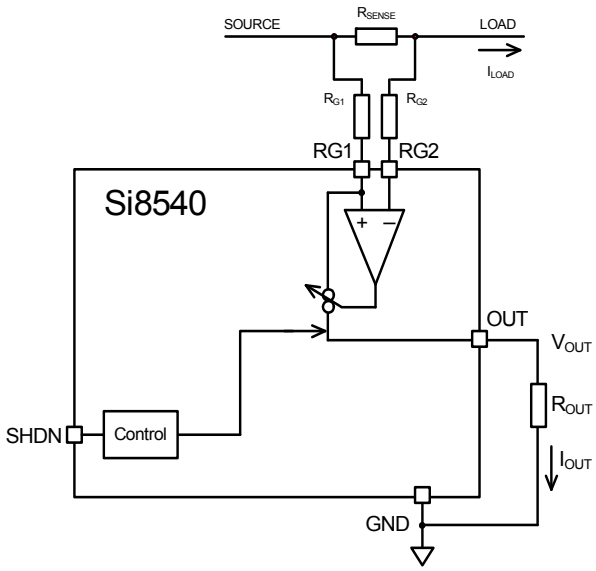

Figure 2. Si8540 Application Circuit

3.1. Application Information

The Si8540 can sense a wide range of currents with different sense resistor values. Table 3 lists typical operational values.

Table 3. Recommended Current Sense Resistor for a Given Full-Scale Load Current

Full-scale Load Current I_{SENSE} (A)	Current-Sense Resistor R_{SENSE} (mΩ)	Gain-Setting Resistors, RG1 = RG2 (Ω)	Output Resistor, R_{OUT} (kΩ)	Full-Scale Output Voltage, V_{OUT} (V)	Scale Factor V_{OUT}/I_{SENSE} (V/A)	Typical Error at 1, 10 and 100% of Full Load (%)		
						1%	10%	100%
0.1	1000	200	5	2.5	25	10	1	0.2
1	100	200	5	2.5	2.5	10	1	0.2
5	20	100	2	2	0.4	5	1	0.2
10	5	50	2	2	0.2	5	1	0.4

3.1.1. Selecting R_{SENSE}

Selecting R_{SENSE} involves making the best trade-off between power efficiency and accuracy. Low R_{SENSE} values dissipate less power while higher values maximize accuracy. In general, it is best to choose a relatively high value for R_{SENSE} in applications where the measured current is small. For higher current applications, the sense resistor should be able to dissipate the heat from its power loss; otherwise, its value may drift or it may fail open, possibly causing a large differential voltage across RG1 and RG2 that may damage the device. In most applications, R_{SENSE} should have low inductance to reduce the impact of any high-frequency components in the current being measured (low inductance metal film resistors are recommended). Also, note that the Si8540 requires at least 3.5 V of voltage headroom between the voltage at pin RG1 and pin OUT. This voltage headroom decreases as R_{SENSE} increases. A good guideline for determining the maximum value for R_{SENSE} is shown in the following equation:

$$R_{SENSEmax} = (V_{SOURCE} - V_{OUTmax} - 3.5\ V)/I_{LOAD}$$

Where:

V_{SOURCE} is the high-side voltage

V_{OUTmax} is the full-scale output voltage at the OUT pin

I_{LOAD} is the current passing through R_{SENSE} measured by the Si8540

3.1.2. Selecting RG1 and RG2

The values of resistors R_{G1} and R_{G2} determine the sense amp current-gain. These two resistors must have the same value, and resulting current gain is equal to R_{SENSE} / R_G (where $R_G = R_{G1} = R_{G2}$).

The minimum value of R_G is determined by the maximum current at the OUT pin (1.5 mA) and by the resistance between the internal current sense amp input and the sense resistor (approximately 0.2 Ω). As the value of R_G is reduced, the input resistance becomes a larger portion of the total gain-setting resistance. This gain error can be compensated by trimming R_G or R_{OUT}. A good guideline for determining the maximum value for R_G is shown in the following equation:

$$R_{Gmax} = (V_{SENSEmax} / 1.5\ mA)$$

Where:

R_{Gmax} is the largest value for RG1 and RG2

$V_{SENSEmax}$ is the value of V_{SENSE} at maximum I_{LOAD}

Note that for a given value of V_{SENSE}, a decrease of the R_G resistor values causes a corresponding increase in current at the OUT pin. This causes additional power to be dissipated in R_{OUT} rather than in the load, which can reduce efficiency. Note also that mismatches in the currents passing R_{G1} and R_{G2} (IOS) together with R_G affect the full scale error.

This error can be reduced by lowering the values of R_{G1}, R_{G2} and/or lowering their tolerances. This error can also be reduced by increasing the value of R_{SENSE}.

3.1.3. Choosing R_{OUT}

R_{OUT} must be chosen to generate the required full-scale output voltage at the full scale I_{OUT}, which, in turn, is determined by R_{G1}, R_{G2}, and R_{SENSE}. The upper limit of R_{OUT} is determined by the input impedance of the device that it drives. This input impedance should be much larger than R_{OUT}; otherwise, measurement accuracy will be degraded. A good guideline for choosing the value of R_{OUT} is shown in the following equation:

$$(V_{OUTfullscale} \times R_G) / (I_{LOAD} \times R_{SENSE})$$

4. Typical Performance Data

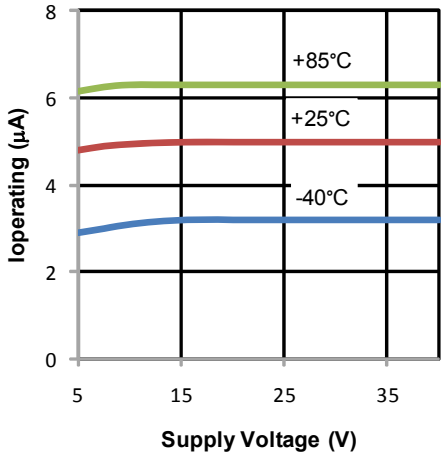

Figure 3. Supply Current vs. Supply Voltage

(R_{OUT} = 2 kΩ, C_{OUT} = 50 pF, R_{G1} = R_{G2} = 200 Ω)

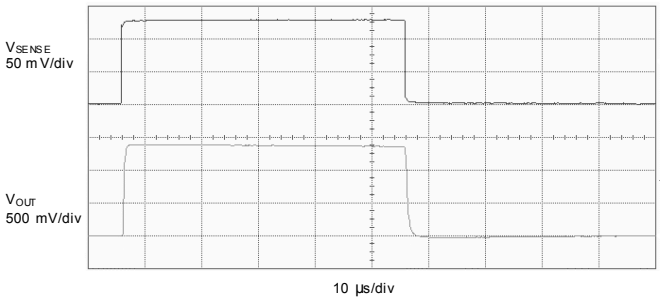

Figure 4. Transient Response 1

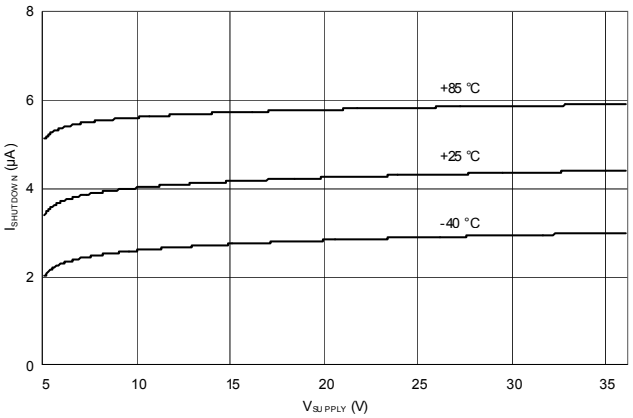

Figure 5. Shutdown Supply Current vs Supply Voltage

(R_{OUT} = 1 kΩ, C_{OUT} = 50 pF, R_{G1} = R_{G2} = 10 Ω)

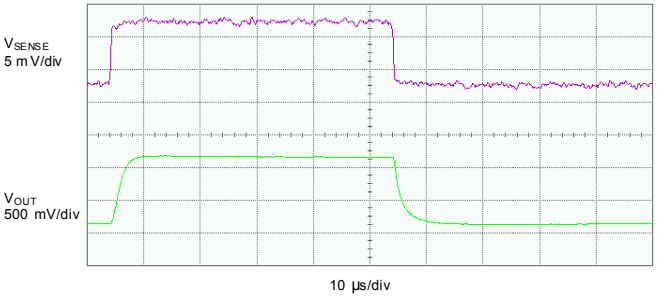

Figure 6. Transient Response 2

(R_{OUT} = 2 kΩ, C_{OUT} = 50 pF, R_{G1} = R_{G2} = 200 Ω, V_{SENSE} = 100 mV)

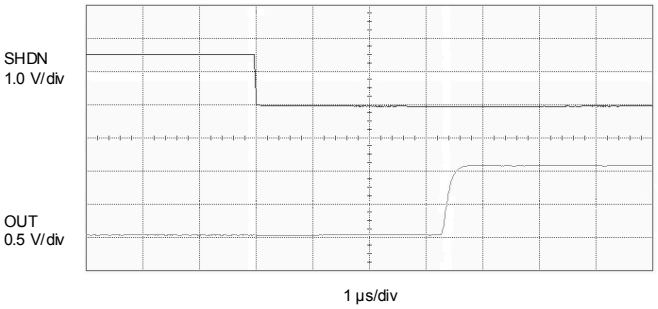

Figure 7. Startup Delay

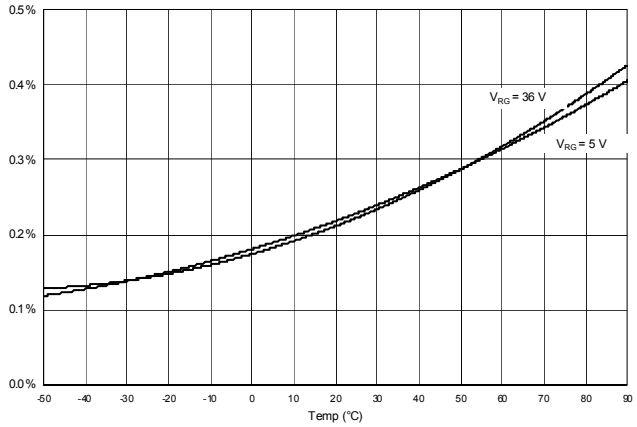

Figure 8. Output Error vs. Temperature

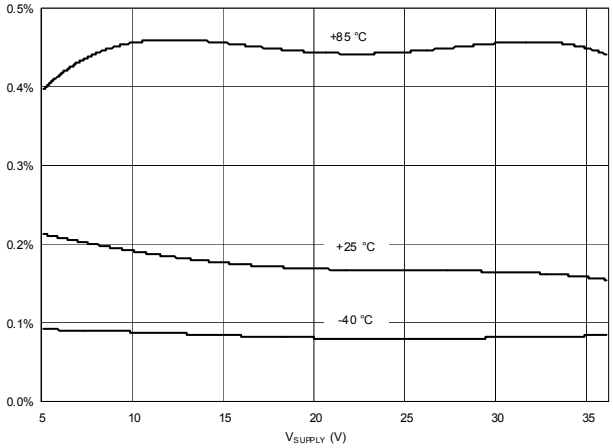

Figure 9. Output Error vs. Supply Voltage

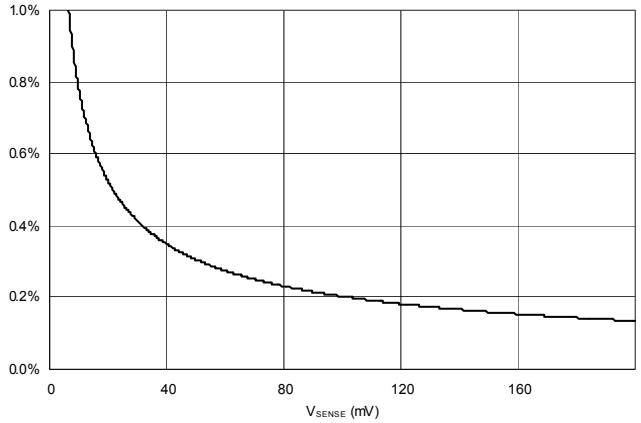

Figure 10. Output Error vs. Sense Voltage

5. Pin Descriptions

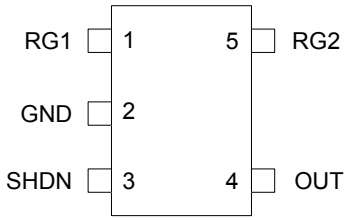

SOT-23

Figure 11. Pin Configuration

Table 4. Pin Descriptions

Pin Number	Name	Description
SOT23		
1	RG1	Power-side input.
2	GND	Ground.
3	SHDN	Shutdown input. Ground for normal operation. High voltage for shutdown.
4	OUT	Current output.
5	RG2	Load-side input.

6. Ordering Guide

Ordering Part #[1]	Temperature Range	Package
Si8540-B-FW	–40 to +85 °C	SOT-23[2]

Notes:
1. Tape and reel options are specified by adding an “R” suffix to the ordering part number.
   Example: “Si8450-B-FWR” indicates the SOT-23 package option in a tape and reel carrier.
2. Moisture sensitivity level (MSL) is (MSL2A) for SOT-23 package with peak reflow temperature of (260 °C) according to JEDEC industry-standard classifications.

6.1. Device Marking

6.1.1. SOT-23 Package Top Mark

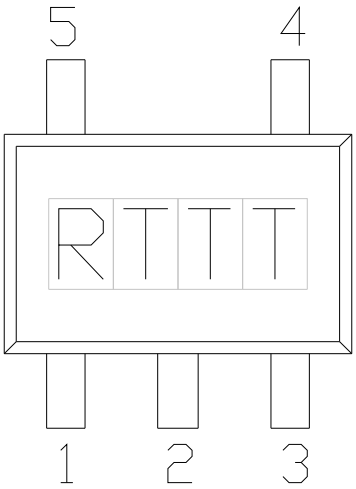

6.1.2. Top Marking Explanation

Line 1 Marking:	Manufacturing trace code	R = Device revision (B) TTT = Assembly trace code

7. Package Outline: SOT-23

Figure 12 illustrates the package details for the SOT-23. Table 5 lists the values for the dimensions shown in the illustration.

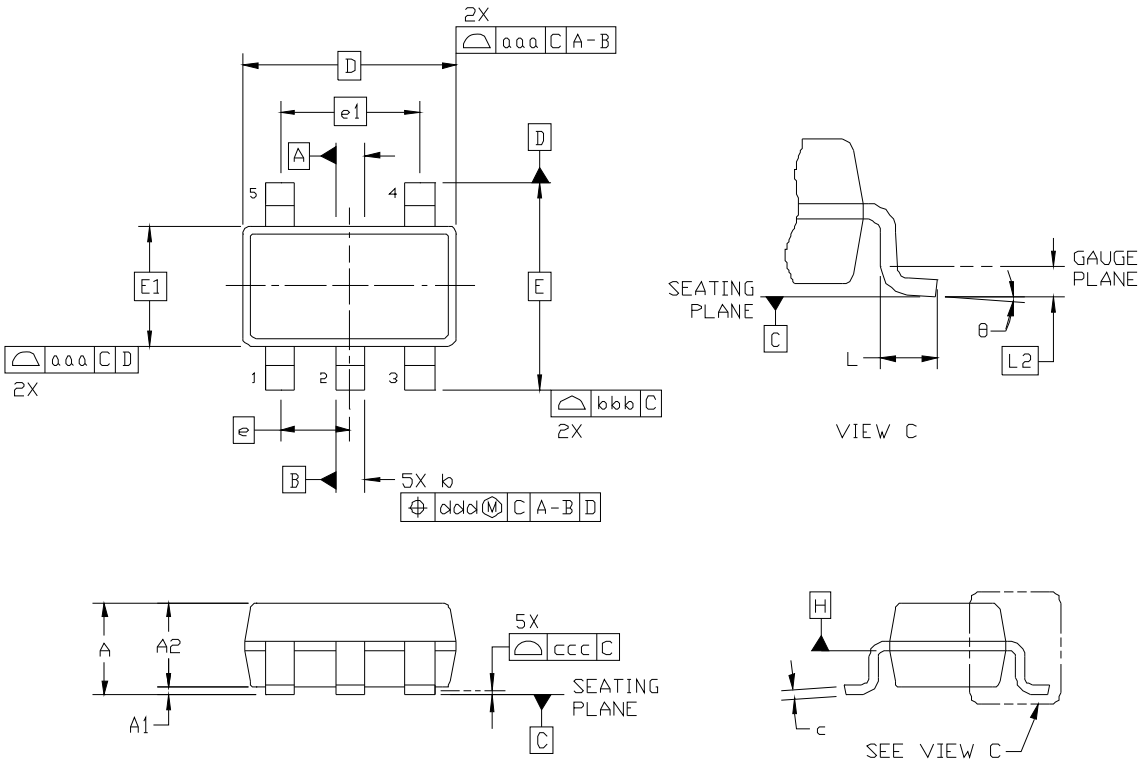

Figure 12. SOT-23 Package

Table 5. SOT-23 Package Diagram Dimensions

Dimension	Min	Max
A	—	1.45
A1	0.00	0.15
A2	0.90	1.30
b	0.30	0.50
c	0.08	0.20
D	2.90 BSC	
E	2.80 BSC	
E1	1.60 BSC	
e	0.95 BSC	

Dimension	Min	Max
E1	1.90 BSC	
L	0.30	0.60
L2	0.25 BSC	
θ	0°	8°
aaa	0.15	
bbb	0.20	
ccc	0.10	
ddd	0.20	

Notes:

1. All dimensions shown are in millimeters (mm) unless otherwise noted.
2. Dimensioning and Tolerancing per ANSI Y14.5M-1994.
3. This drawing conforms to the JEDEC Solid State Outline MO-178, Variation AA.
4. Recommended card reflow profile is per the JEDEC/IPC J-STD-020D specification for Small Body Components.

8. Land Pattern: SOT-23

Figure 13 illustrates the recommended land pattern details for the SOT-23 device. Table 6 lists the values for the dimensions shown in the illustration.

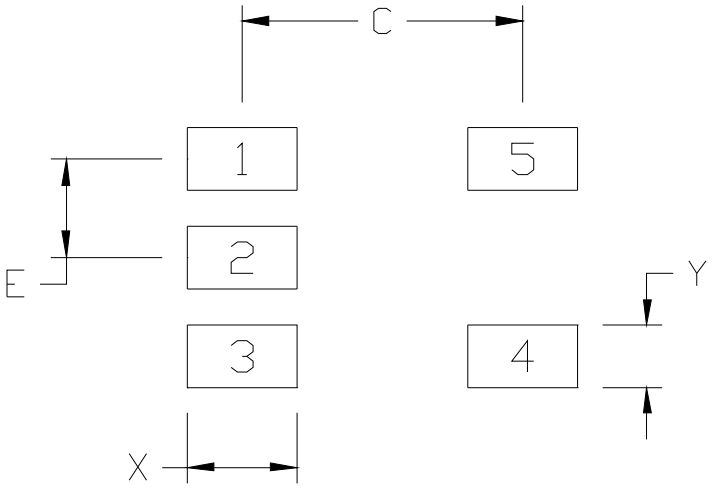

Figure 13. SOT-23 Land Pattern

Table 6. SOT-23 Land Pattern Dimensions

Dimension	(mm)
C	2.70
E	0.95
X	1.05
Y	0.60

Notes:
General
1. All dimensions shown are in millimeters (mm) unless otherwise noted.
2. Dimensioning and Tolerancing is per the ANSI Y14.5M-1994 specification.
3. This Land Pattern Design is based on the IPC-7351 guidelines.
4. All dimensions shown are at Maximum Material Condition (MMC). Least Material Condition (LMC) is calculated based on a Fabrication Allowance of 0.05 mm.

Card Assembly
5. A No-Clean, Type-3 solder paste is recommended.
6. The recommended card reflow profile is per the JEDEC/IPC J-STD-020D specification for Small Body Components.

DOCUMENT CHANGE LIST

Revision 2.5 (July 2007 Integration Associates) to Revision 1.0 (March 2010 Silicon Laboratories)

- Reformatted document from IA2410 and renamed Si8540.
- Updated " Functional Block Diagram" on page 1.
- Updated " Description" on page 1.
- Updated Table 2 on page 5.
  - OUT current accuracy changed from ±1 to ±1.5%. (max)
  - No-Load OUT Error changed from 5 to 15 µA (max)
  - Low-Level OUT Error changed from ±5 to ±10 µA (max)
  - Temperature output error test conditions note updated to include temperature range of –40 to TBD° C.
- Updated "3. Functional Description" on page 7.
- Updated "3.1.1. Selecting R_{SENSE}" on page 8.
- Updated "3.1.2. Selecting RG1 and RG2" on page 8.
- Updated "3.1.3. Choosing R_{OUT}" on page 8.
- Removed temperature sensing function throughout.
- Added recommended PCB Land Pattern sections.
- Reformatted document from “IA2410 Rev 2.5” (Integration Associates) and renamed and re-released as “Si8540 Rev 1.0” (which obsoletes the previous preliminary internal revision 2.6).

Revision 1.0 to Revision 1.1

- MSL for the SOT-23 package improved to MSL2A (see "6. Ordering Guide" on page 12).
- Added "6.1. Device Marking" on page 13.

Revision 1.1 to Revision 1.2

- Removed SOIC-8 package throughout document.

NOTES:

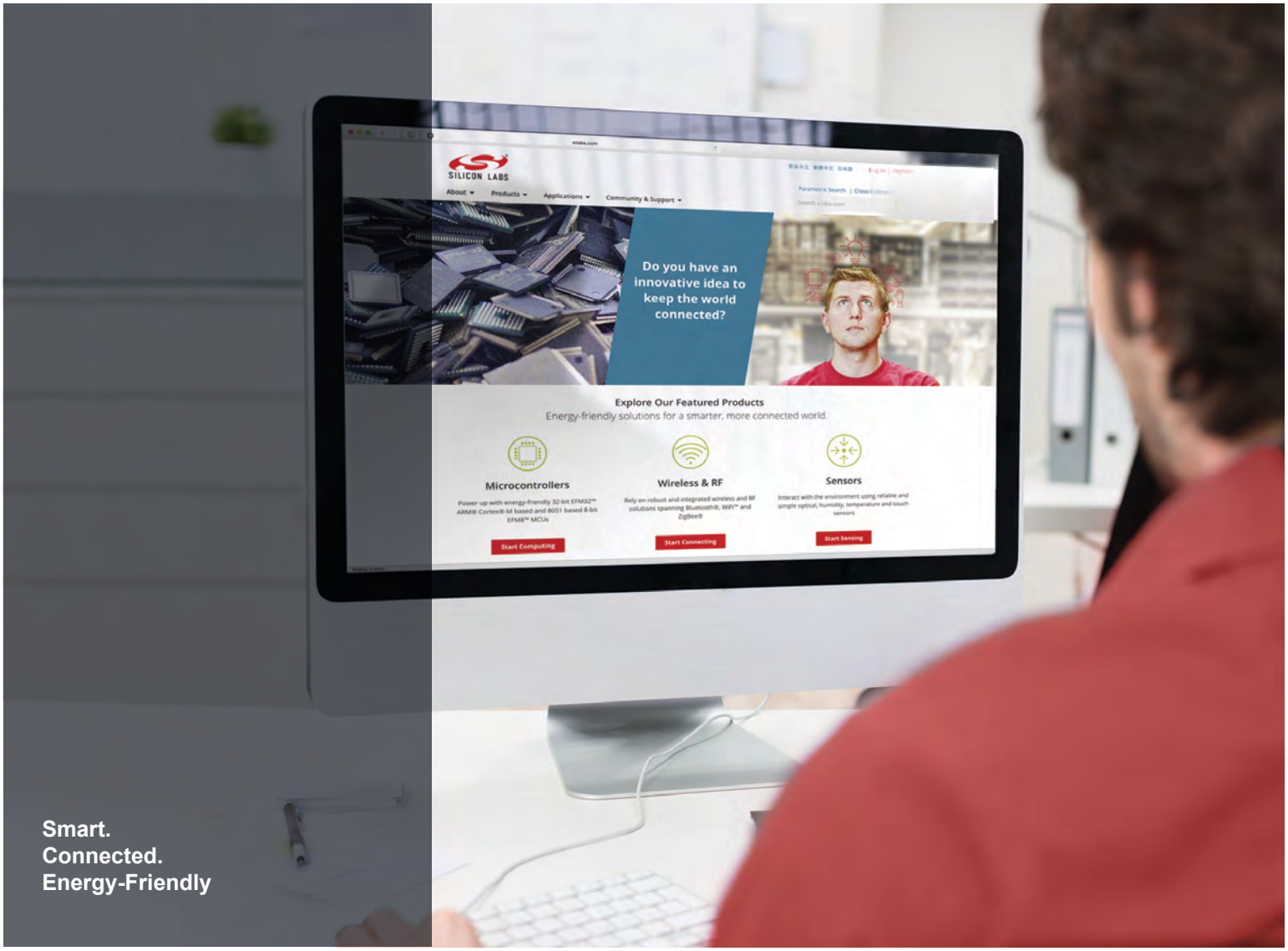

Products
www.silabs.com/products

Quality
www.silabs.com/quality

Support and Community
community.silabs.com

Disclaimer
Silicon Laboratories intends to provide customers with the latest, accurate, and in-depth documentation of all peripherals and modules available for system and software implementers using or intending to use the Silicon Laboratories products. Characterization data, available modules and peripherals, memory sizes and memory addresses refer to each specific device, and "Typical" parameters provided can and do vary in different applications. Application examples described herein are for illustrative purposes only. Silicon Laboratories reserves the right to make changes without further notice and limitation to product information, specifications, and descriptions herein, and does not give warranties as to the accuracy or completeness of the included information. Silicon Laboratories shall have no liability for the consequences of use of the information supplied herein. This document does not imply or express copyright licenses granted hereunder to design or fabricate any integrated circuits. The products must not be used within any Life Support System without the specific written consent of Silicon Laboratories. A "Life Support System" is any product or system intended to support or sustain life and/or health, which, if it fails, can be reasonably expected to result in significant personal injury or death. Silicon Laboratories products are generally not intended for military applications. Silicon Laboratories products shall under no circumstances be used in weapons of mass destruction including (but not limited to) nuclear, biological or chemical weapons, or missiles capable of delivering such weapons.

Trademark Information
Silicon Laboratories Inc., Silicon Laboratories, Silicon Labs, SiLabs and the Silicon Labs logo, CMEMS®, EFM, EFM32, EFR, Energy Micro, Energy Micro logo and combinations thereof, "the world's most energy friendly microcontrollers", Ember®, EZLink®, EZMac®, EZRadio®, EZRadioPRO®, DSPLL®, ISOmodem ®, Precision32®, ProSLIC®, SiPHY®, USBXpress® and others are trademarks or registered trademarks of Silicon Laboratories Inc. ARM, CORTEX, Cortex-M3 and THUMB are trademarks or registered trademarks of ARM Holdings. Keil is a registered trademark of ARM Limited. All other products or brand names mentioned herein are trademarks of their respective holders.

SILICON LABS

Silicon Laboratories Inc.
400 West Cesar Chavez
Austin, TX 78701
USA

http://www.silabs.com