Si5010

OC-12/3, STM-4/1 SONET/SDH Clock and Data Recovery IC

Features

Complete CDR solution includes the following:

- Supports OC-12/3, STM-4/1
- Low power, 293 mW (TYP OC-12)
- Small footprint: 4x4 mm
- DSPLL™ eliminates external loop filter components
- 3.3 V tolerant control inputs
- Exceeds All SONET/SDH jitter specifications
- Jitter generation 1.6 mUI_{rms} (typ)
- Device powerdown
- Loss-of-lock indicator
- Single 2.5 V supply

Ordering Information:

See page 16.

Applications

- SONET/SDH/ATM routers
- Add/drop multiplexers
- Digital cross connects
- Board level serial links
- SONET/SDH test equipment
- Optical transceiver modules
- SONET/SDH regenerators

Pin Assignments

Si5010

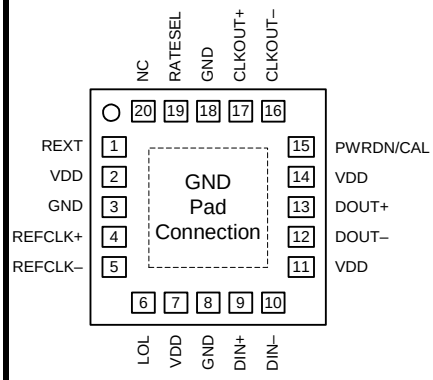

Top View

Description

The Si5010 is a fully-integrated low-power clock and data recovery (CDR) IC designed for high-speed serial communication systems. It extracts timing information and data from a serial input at OC-12/3 or STM-4/1 data rates. DSPLL® technology eliminates sensitive noise entry points thus making the PLL less susceptible to board-level interaction and helping to ensure optimal jitter performance in the application.

The Si5010 represents an industry-leading combination of low-jitter, low-power, and small size for high-speed CDRs. It operates from a single 2.5 V supply over the industrial temperature range (–40 to 85 °C).

Functional Block Diagram

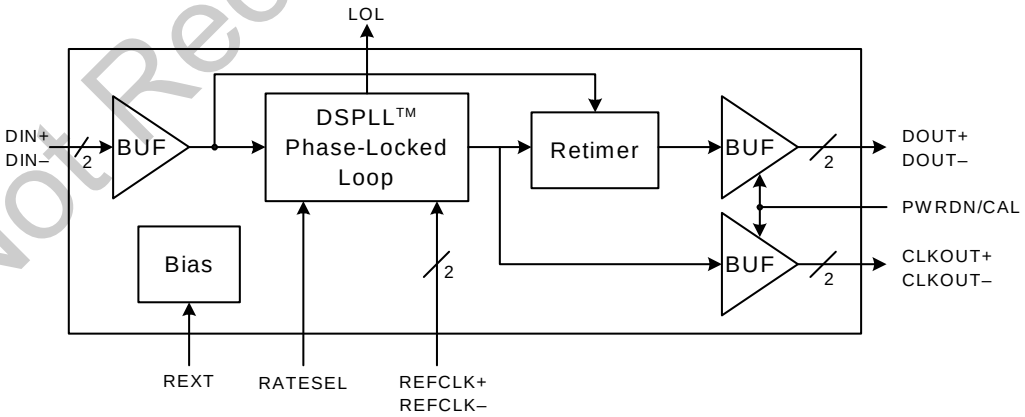

Not Recommended for New Designs

 Copyright © 2015 by Silicon Laboratories

Not Recommended for New Designs

TABLE OF CONTENTS

Section **Page**

1. Detailed Block Diagram 4
2. Electrical Specifications 5
3. Typical Application Schematic 9
4. Functional Description 10
4.1. DSPLL® 10
4.2. PLL Self-Calibration 10
4.3. Multi-Rate Operation 10
4.4. Reference Clock Detect 10
4.5. Lock Detect 10
4.6. PLL Performance 11
4.7. Powerdown 11
4.8. Device Grounding 11
4.9. Bias Generation Circuitry 12
4.10. Differential Input Circuitry 12
4.11. Differential Output Circuitry 13
5. Pin Descriptions: Si5010 14
6. Ordering Guide 16
7. Top Marking 17
8. Package Outline 18
9. 4x4 mm 20L QFN Recommended PCB Layout 19
Document Change List 21
Contact Information 22

Not Recommended for New Designs

1. Detailed Block Diagram

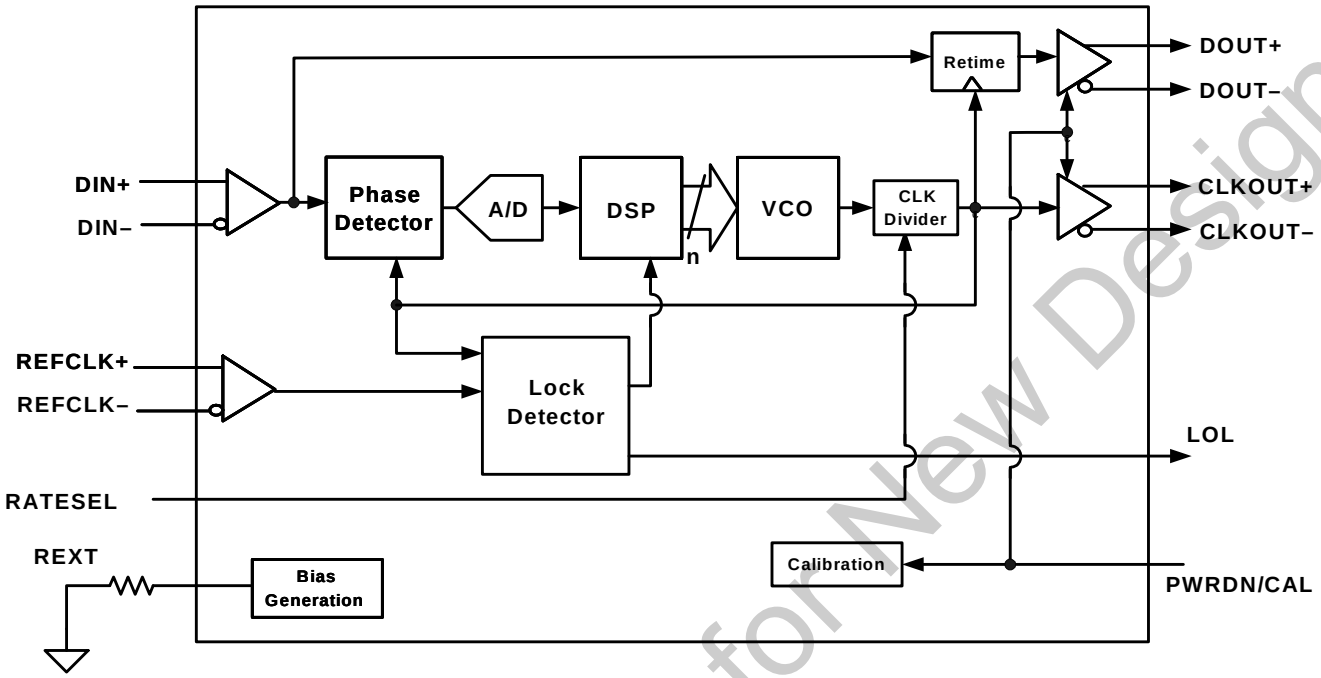

Not Recommended for New Designs

2. Electrical Specifications

Table 1. Recommended Operating Conditions

Parameter	Symbol	Test Condition	Min[1]	Typ	Max[1]	Unit
Ambient Temperature	T_A		–40	25	85	°C
Si5010 Supply Voltage[2]	V_{DD}		2.375	2.5	2.625	V

Notes:
1. All minimum and maximum specifications are guaranteed and apply across the recommended operating conditions. Typical values apply at nominal supply voltages and an operating temperature of 25 °C unless otherwise stated.
2. The Si5010 specifications are guaranteed when using the recommended application circuit (including component tolerance) shown in "3. Typical Application Schematic" on page 9.

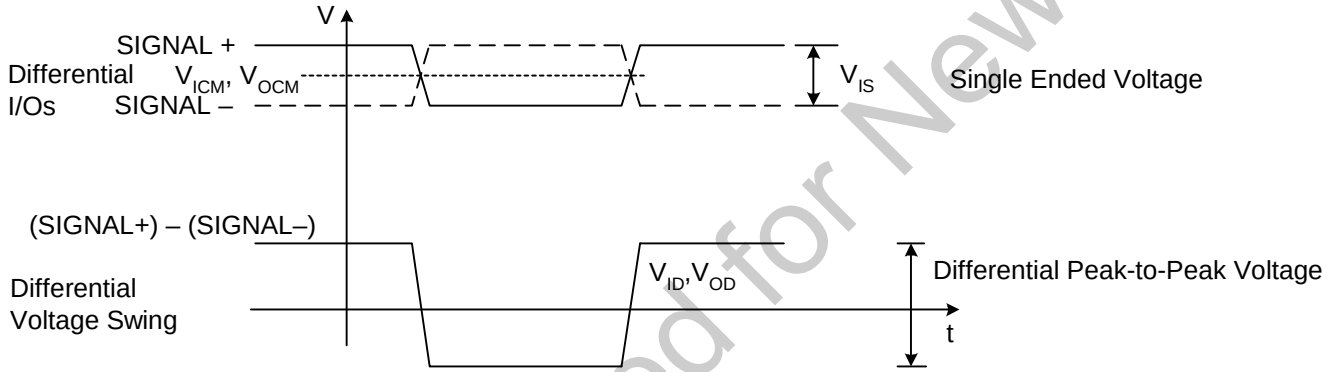

Figure 1. Differential Voltage Measurement (DIN, REFCLK, DOUT, CLKOUT)

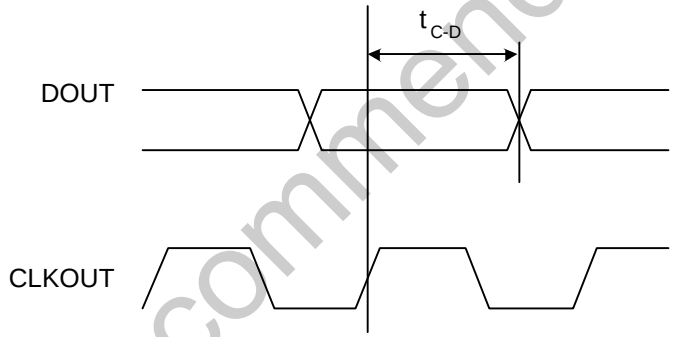

Figure 2. Differential Clock to Data Timing

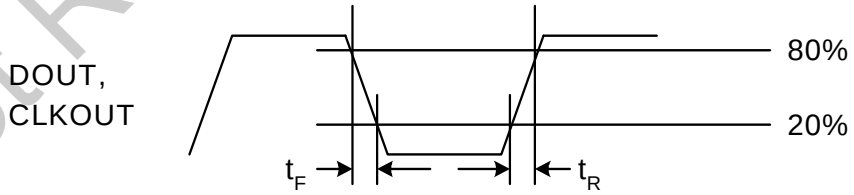

Figure 3. Differential DOUT and CLKOUT Rise/Fall Times

Not Recommended for New Designs

Table 2. DC Characteristics
(V_{DD} = 2.5 V ±5%, T_A = –40 to 85 °C)

Parameter	Symbol	Test Condition	Min	Typ	Max	Unit
Supply Current OC-12 OC-3	I_{DD}		 — —	 117 124	 131 138	mA
Power Dissipation OC-12 OC-3	P_D		 — —	 293 310	 344 362	mW
Common Mode Input Voltage (DIN, REFCLK)	V_{ICM}	varies with V_{DD}	—	.80 x V_{DD}	—	V
Single Ended Input Voltage (DIN, REFCLK)	V_{IS}	See Figure 1	200	—	750	mV_{PP}
Differential Input Voltage Swing* (DIN, REFCLK)	V_{ID}	See Figure 1	200	—	1500	mV_{PP}
Input Impedance (DIN, REFCLK)	R_{IN}	Line-to-Line	84	100	116	Ω
Differential Output Voltage Swing (DOUT)	V_{OD}	100 Ω Load Line-to-Line	780	970	1260	mV_{PP}
Differential Output Voltage Swing (CLKOUT)	V_{OD}	100 Ω Load Line-to-Line	780	970	1260	mV_{PP}
Output Common Mode Voltage (DOUT,CLKOUT)	V_{OCM}	100 Ω Load Line-to-Line	—	V_{DD} – 0.23	—	V
Output Impedance (DOUT,CLKOUT)	R_{OUT}	Single-ended	84	100	116	Ω
Output Short to GND (DOUT,CLKOUT)	$I_{SC(-)}$		—	25	31	mA
Output Short to V_{DD} (DOUT,CLKOUT)	$I_{SC(+)}$		–17.5	–14.5	—	mA
Input Voltage Low (LVTTL Inputs)	V_{IL}		—	—	.8	V
Input Voltage High (LVTTL Inputs)	V_{IH}		2.0	—	—	V
Input Low Current (LVTTL Inputs)	I_{IL}		—	—	10	µA
Input High Current (LVTTL Inputs)	I_{IH}		—	—	10	µA
Output Voltage Low (LVTTL Outputs)	V_{OL}	I_O = 2 mA	—	—	0.4	V
Output Voltage High (LVTTL Outputs)	V_{OH}	I_O = 2 mA	2.0	—	—	V
Input Impedance (LVTTL Inputs)	R_{IN}		10	—	—	kΩ
PWRDN/CAL Leakage Current	I_{PWRDN}	$V_{PWRDN} \geq 0.8$ V	15	25	35	µA

***Note:** The DIN and REFCLK inputs may be driven differentially or single-endedly. When driving single-endedly, the voltage swing of the signal applied to the active input must exceed the specified minimum differential input voltage swing (V_{ID} min) and the unused input must be ac-coupled to ground. When driving differentially, the difference between the positive and negative input signals must exceed V_{ID} min. (Each individual input signal needs to swing only half of this range.) In either case, the voltage applied to any individual pin (DIN+, DIN–, REFCLK+, or REFCLK–) must not exceed the specified maximum Input Voltage Range (V_{IS} max).

Not Recommended for New Designs

Table 3. AC Characteristics (Clock & Data)

(V_A 2.5 V ±5%, T_A = –40 to 85 °C)

Parameter	Symbol	Test Condition	Min	Typ	Max	Unit
Output Clock Rate	f_{CLK}		150	—	666	MHz
Output Rise/Fall Time (differential)	t_R, t_F	Figure 3	—	80	110	ps
Clock to Data Delay OC-12 OC-3	$t_{(c-d)}$	Figure 2	 835 4040	 880 4090	 930 4140	 ps ps
Input Return Loss		100 kHz–1 GHz	—	20	—	dB

Table 4. AC Characteristics (PLL Characteristics)

(V_{DD} = 2.5 V ±5%, T_A = –40 to 85 °C)

Parameter	Symbol	Test Condition	Min	Typ	Max	Unit
Jitter Tolerance (OC-12 Mode)*	$J_{TOL(PP)}$	f = 30 Hz	40	—	—	UI_{PP}
		f = 300 Hz	4	—	—	UI_{PP}
		f = 25 kHz	4	—	—	UI_{PP}
		f = 250 kHz	0.4	—	—	UI_{PP}
Jitter Tolerance (OC-3 Mode)*	$J_{TOL(PP)}$	f = 30 Hz	40	—	—	UI_{PP}
		f = 300 Hz	4	—	—	UI_{PP}
		f = 6.5 kHz	4	—	—	UI_{PP}
		f = 65 kHz	0.4	—	—	UI_{PP}
RMS Jitter Generation*	$J_{GEN(rms)}$	with no jitter on serial data	—	1.6	3.0	mUI
Peak-to-Peak Jitter Generation	$J_{GEN(PP)}$	with no jitter on serial data	—	25	55	mUI
Jitter Transfer Bandwidth*	J_{BW}	OC-12 Mode	—	—	500	kHz
		OC-3 Mode	—	—	130	kHz
Jitter Transfer Peaking*	J_P	f < 2 MHz	—	.03	0.1	dB
Acquisition Time	T_{AQ}	After falling edge of PWRDN/CAL	1.45	1.5	1.7	ms
		From the return of valid data	40	60	150	µs
Input Reference Clock Duty Cycle	C_{DUTY}		40	50	60	%
Reference Clock Range			19.44		155.52	MHz
Input Reference Clock Frequency Tolerance	C_{TOL}		–100	—	100	ppm
Frequency Difference at which Receive PLL goes out of Lock (REFCLK compared to the divided down VCO clock)	LOL		450	600	750	ppm
Frequency Difference at which Receive PLL goes into Lock (REFCLK compared to the divided down VCO clock)	LOCK		150	300	450	ppm

***Note:** Bellcore specifications: GR-253-CORE, Issue 3, September 2000. Using PRBS 2^{23} –1 data pattern.

Not Recommended for New Designs

Table 5. Absolute Maximum Ratings

Parameter	Symbol	Value	Unit
DC Supply Voltage	V_{DD}	–0.5 to 2.8	V
LVTTL Input Voltage	V_{DIG}	–0.3 to 3.6	V
Differential Input Voltages	V_{DIF}	–0.3 to (V_{DD}+ 0.3)	V
Maximum Current any output PIN		±50	mA
Operating Junction Temperature	T_{JCT}	–55 to 150	°C
Storage Temperature Range	T_{STG}	–55 to 150	°C
ESD HBM Tolerance (100 pf, 1.5 kΩ)		1	kV

Note: Permanent device damage may occur if the above absolute maximum ratings are exceeded. Functional operation should be restricted to the conditions as specified in the operational sections of this data sheet. Exposure to absolute maximum rating conditions for extended periods may affect device reliability.

Table 6. Thermal Characteristics

Parameter	Symbol	Test Condition	Value	Unit
Thermal Resistance Junction to Ambient	φ_{JA}	Still Air	38	°C/W

Not Recommended for New Designs

3. Typical Application Schematic

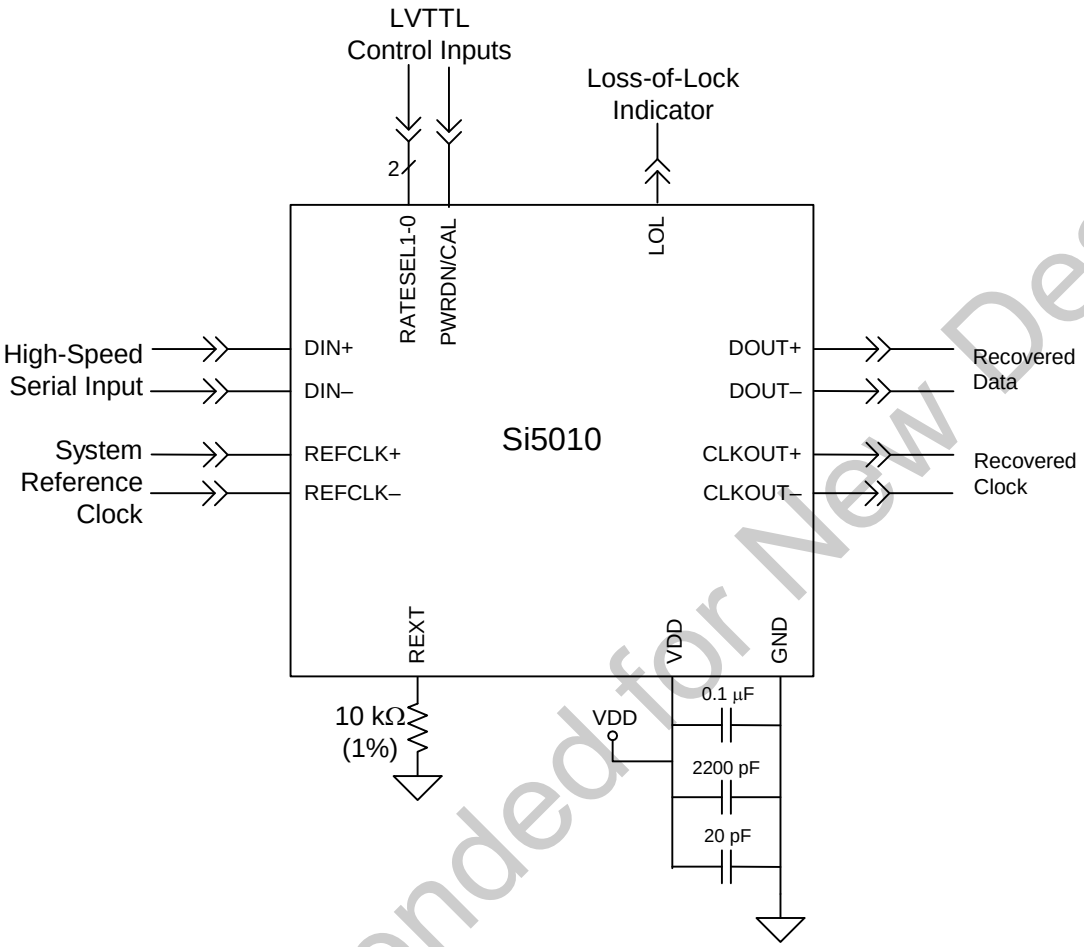

Not Recommended for New Designs

4. Functional Description

The Si5010 utilizes a phase-locked loop (PLL) to recover a clock synchronous to the input data stream. This clock is used to retime the data, and both the recovered clock and data are output synchronously via current mode logic (CML) drivers. Optimal jitter performance is obtained by using Silicon Laboratories' DSPLL® technology to eliminate the noise entry points caused by external PLL filter components.

4.1. DSPLL®

The PLL structure (shown in "3. Typical Application Schematic" on page 9) utilizes Silicon Laboratories' DSPLL technology to eliminate the need for external loop filter components found in traditional PLL implementations. This is achieved by using a digital signal processing (DSP) algorithm to replace the loop filter commonly found in analog PLL designs. This algorithm processes the phase detector error term and generates a digital control value to adjust the frequency of the voltage-controlled oscillator (VCO). Because external loop filter components are not required, sensitive noise entry points are eliminated, thus making the DSPLL less susceptible to board-level noise sources that make SONET/SDH jitter compliance difficult to attain.

4.2. PLL Self-Calibration

The Si5020 achieves optimal jitter performance by using self-calibration circuitry to set the loop gain parameters within the DSPLL. For the self-calibration circuitry to operate correctly, the power supply voltage must exceed 2.25 V when calibration occurs. For best performance, the user should force a self-calibration once the supply has stabilized on power-up.

A self-calibration can be initiated by forcing a high-to-low transition on the power-down control input, PWRDN/CAL, while a valid reference clock is supplied to the REFCLK input. The PWRDN/CAL input should be held high at least 1 µs before transitioning low to guarantee a self-calibration. Several application circuits that could be used to initiate a power-on self-calibration are provided in Silicon Laboratories application note “AN42: Controlling DSPLL Self-Calibration for the Si5020/5018/5010 CDR Devices and Si531x Clock Multiplier/Regenerator Devices”.

4.3. Multi-Rate Operation

The Si5010 supports clock and data recovery for OC-12/3 and STM-4/1 data streams.

Multi-rate operation is achieved by configuring the device to divide down the output of the VCO to the desired data rate. The RATESEL configuration and associated data rates are given in Table 7.

Table 7. Data-Rate Configuration

RATESEL	SONET/SDH
0	622.08 Mbps
1	155.52 Mbps

4.4. Reference Clock Detect

The Si5010 CDR requires an external reference clock applied to the REFCLK input for normal device operation. When REFCLK is absent, the LOL alarm will always be asserted when it has been determined that no activity exists on REFCLK, indicating the lock status of the PLL is unknown. Additionally, the Si5010 uses the reference clock to center the VCO operating frequency so that clock and data can be recovered from the input data stream. The VCO operates at an integer multiple of the REFCLK frequency. (See “Lock Detect” section.) The device will self configure for operation with one of three reference clock frequencies. This eliminates the need to externally configure the device to operate with a particular reference clock. The REFCLK frequency should be 19.44 MHz, 77.76 MHz, or 155.52 MHz with a frequency accuracy of ±100 ppm.

4.5. Lock Detect

The Si5010 provides lock-detect circuitry that indicates whether the PLL has achieved frequency lock with the incoming data. The circuit compares the frequency of a divided-down version of the recovered clock with the frequency of the applied reference clock (REFCLK). If the recovered clock frequency deviates from that of the reference clock by the amount specified in Table 4 on page 7, the PLL is declared out-of-lock, and the loss-of-lock (LOL) pin is asserted high. In this state, the PLL will periodically try to reacquire lock with the incoming data stream. During reacquisition, the recovered clock may drift over a ±600 ppm range relative to the applied reference clock, and the LOL output alarm may toggle until the PLL has reacquired frequency lock. Due to the low noise and stability of the DSPLL, under the condition where data is removed from the inputs, there is the possibility that the PLL will not drift enough to render an out-of-lock condition.

Not Recommended for New Designs

If REFCLK is removed, the LOL output alarm will always be asserted when it has been determined that no activity exists on REFCLK, indicating the frequency lock status of the PLL is unknown.

Note: LOL is not asserted during PWRDN/CAL.

4.6. PLL Performance

The PLL implementation used in the Si5010 is fully compliant with the jitter specifications proposed for SONET/SDH equipment by Bellcore GR-253-CORE, Issue 3, September 2000 and ITU-T G.958.

4.6.1. Jitter Tolerance

The Si5010's tolerance to input jitter exceeds that of the Bellcore/ITU mask shown in Figure 4. This mask defines the level of peak-to-peak sinusoid jitter that must be tolerated when applied to the differential data input of the device.

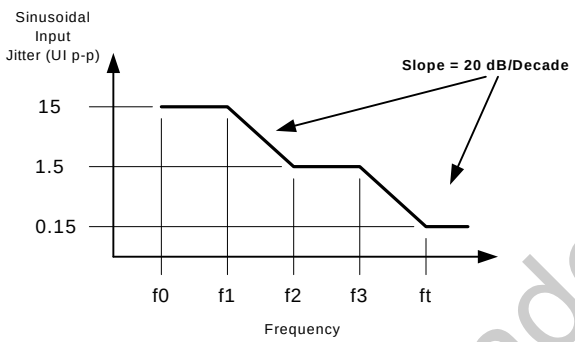

SONET Data Rate	F0 (Hz)	F1 (Hz)	F2 (Hz)	F3 (kHz)	Ft (kHz)
OC-12	10	30	300	25	250
OC-3	10	30	300	6.5	65

Figure 4. Jitter Tolerance Specification

4.6.2. Jitter Transfer

The Si5010 is fully compliant with the relevant Bellcore/ITU specifications related to SONET/SDH jitter transfer. Jitter transfer is defined as the ratio of output signal jitter to input signal jitter as a function of jitter frequency (see Figure 5). These measurements are made with an input test signal that is degraded with sinusoidal jitter whose magnitude is defined by the mask in Figure 4.

4.6.3. Jitter Generation

The Si5010 meets all relevant specifications for jitter generation proposed for SONET/SDH equipment. The jitter generation specification defines the amount of jitter that may be present on the recovered clock and data outputs when a jitter free input signal is provided. The Si5010 typically generates less than 1.6 mUI_{rms} of jitter when presented with jitter-free input data.

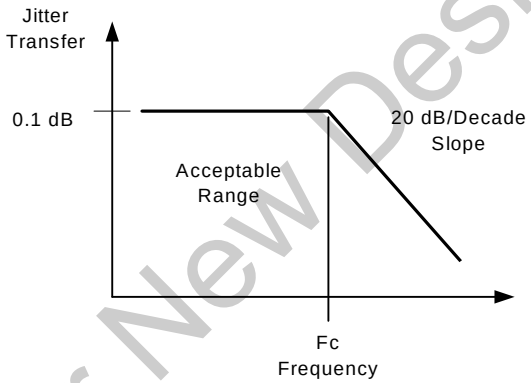

SONET Data Rate	Fc (kHz)
OC-12	500
OC-3	130

Figure 5. Jitter Transfer Specification

4.7. Powerdown

The Si5010 provides a powerdown pin, PWRDN/CAL, that disables the device. When the PWRDN/CAL pin is driven high, the positive and negative terminals of CLKOUT and DOUT are each tied to VDD through 100 Ω on-chip resistors. This feature is useful in reducing power consumption in applications that employ redundant serial channels. When PWRDN/CAL is released (set to low) the digital logic resets to a known initial condition, recalibrates the DSPLL®, and will begin to lock to the data stream.

Note: LOL is not asserted when the device is in the power-down state.

4.8. Device Grounding

The Si5010 uses the GND pad on the bottom of the 20-pin QFN package for device ground. This pad should be connected directly to the analog supply ground. See Figures 10 and 12 for the ground (GND) pad location.

Not Recommended for New Designs

4.9. Bias Generation Circuitry

The Si5010 makes use of an external resistor to set internal bias currents. The external resistor allows precise generation of bias currents which significantly reduces power consumption versus traditional implementations that use an internal resistor. The bias generation circuitry requires a 10 kΩ (1%) resistor connected between REXT and GND.

4.10. Differential Input Circuitry

The Si5010 provides differential inputs for both the high-speed data (DIN) and the reference clock (REFCLK) inputs. An example termination for these inputs is shown in Figure 6. In applications where direct dc coupling is possible, the 0.1 µF capacitors may be omitted. The DIN and REFCLK input amplifiers require an input signal with a minimum differential peak-to-peak voltage listed in Table 2 on page 6.

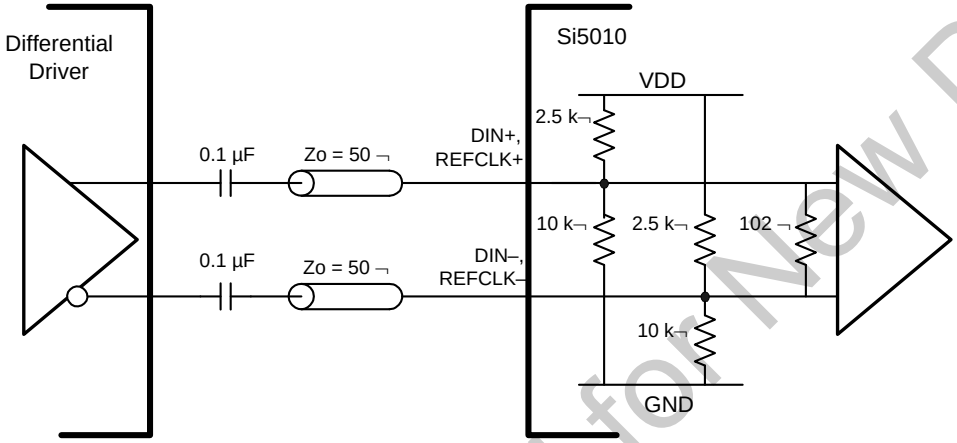

Figure 6. Input Termination for DIN and REFCLK (AC-coupled)

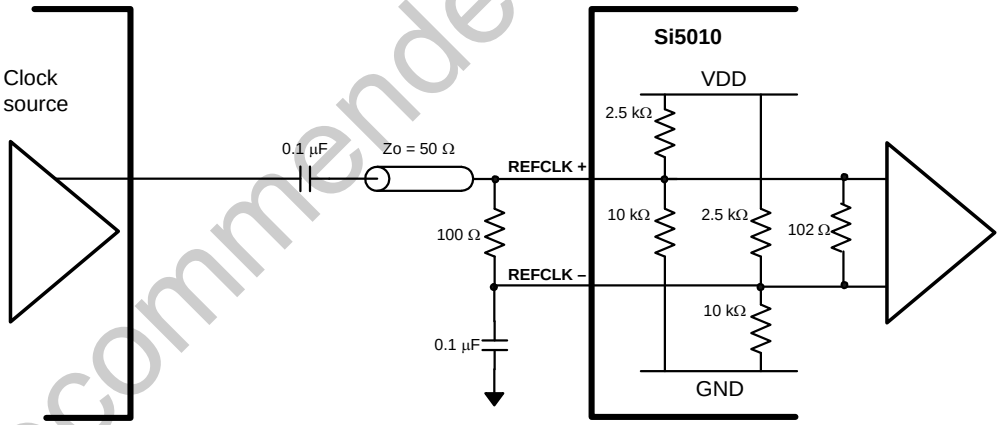

Figure 7. Single-Ended Input Termination for REFCLK (AC-coupled)

Not Recommended for New Designs

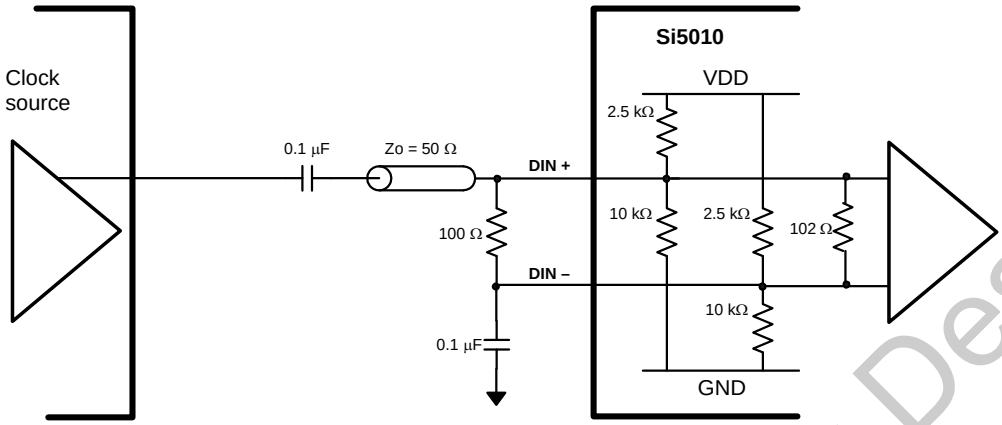

Figure 8. Single-Ended Input Termination for DIN (AC-coupled)

4.11. Differential Output Circuitry

The Si5010 utilizes a current mode logic (CML) architecture to output both the recovered clock (CLKOUT) and data (DOUT). An example of output termination with ac coupling is shown in Figure 9. In applications in which direct dc coupling is possible, the 0.1 µF capacitors may be omitted. The differential peak-to-peak voltage swing of the CML architecture is listed in Table 2 on page 6.

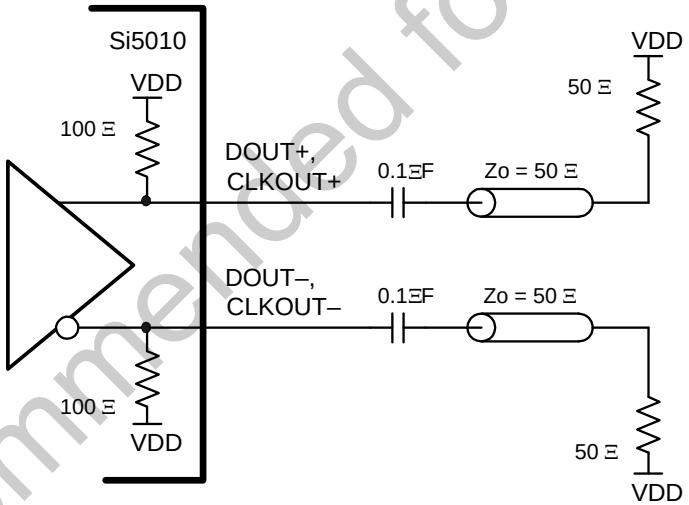

Figure 9. Output Termination for DOUT and CLKOUT (AC-coupled)

Not Recommended for New Designs

5. Pin Descriptions: Si5010

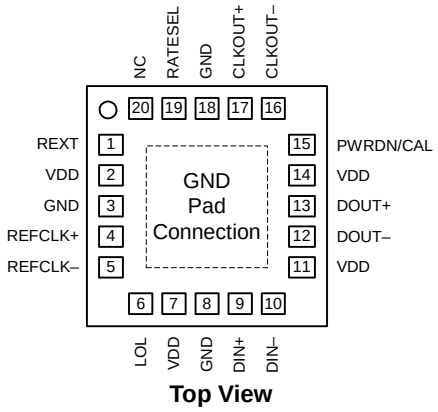

Figure 10. Si5010 Pin Configuration

Table 8. Si5010 Pin Descriptions

Pin #	Pin Name	I/O	Signal Level	Description
1	REXT			**External Bias Resistor.** This resistor is used by onboard circuitry to establish bias currents within the device. This pin must be connected to GND through a 10 kΩ (1%) resistor.
2, 7, 11, 14	VDD		2.5 V	**Supply Voltage.** Nominally 2.5 V.
3, 8, 18, and GND Pad	GND		GND	**Supply Ground.** Nominally 0.0 V. The GND pad found on the bottom of the 20-pin micro leaded package (see Figure 12) must be connected directly to supply ground.
4 5	REFCLK+ REFCLK–	I	See Table 2	**Differential Reference Clock.** The reference clock sets the initial operating frequency used by the onboard PLL for clock and data recovery. Additionally, the reference clock is used to derive the clock output when no data is present.
6	LOL	O	LVTTL	**Loss-of-Lock.** This output is driven high when the recovered clock frequency deviates from the reference clock by the amount specified in Table 4 on page 7.
9 10	DIN+ DIN–	I	See Table 2	**Differential Data Input.** Clock and data are recovered from the differential signal present on these pins.

Not Recommended for New Designs

Table 8. Si5010 Pin Descriptions (Continued)

Pin #	Pin Name	I/O	Signal Level	Description
12 13	DOUT– DOUT+	O	CML	**Differential Data Output.** The data output signal is a retimed version of the data recovered from the signal present on DIN. It is phase aligned with CLKOUT and is updated on the rising edge of CLKOUT.
15	PWRDN/CAL	I	LVTTL	**Powerdown.** To shut down the high-speed outputs and reduce power consumption, hold this pin high. For normal operation, hold this pin low. **Calibration.** To initiate an internal self-calibration, force a high-to-low transition on this pin. (See "4.2. PLL Self-Calibration" on page 10.) **Note:** This input has a weak internal pulldown.
16 17	CLKOUT– CLKOUT+	O	CML	**Differential Clock Output.** The output clock is recovered from the data signal present on DIN. In the absence of data, the output clock is derived from REFCLK.
19	RATESEL	I	LVTTL	**Data Rate Select.** This pin configures the onboard PLL for clock and data recovery at one of two user selectable data rates. See Table 7 for configuration settings. **Note:** This input has a weak internal pulldown.
20	NC			**No Connect.** This pin should be tied to ground.

Not Recommended for New Designs

6. Ordering Guide

Part Number	Package	Voltage	Pb-Free	Temperature
Si5010-X-GM	20-lead QFN	2.5	Yes	–40 to 85 °C

Notes:
1. "X" denotes product revision.
2. Add an "R" at the end of the device to denote tape and reel option; 2500 quantity per reel.
3. These devices use a NiPdAu pre-plated finish on the leads that is fully RoHS6 compliant while being fully compatible with both leaded and lead-free card assembly processes.

Not Recommended for New Designs

7. Top Marking

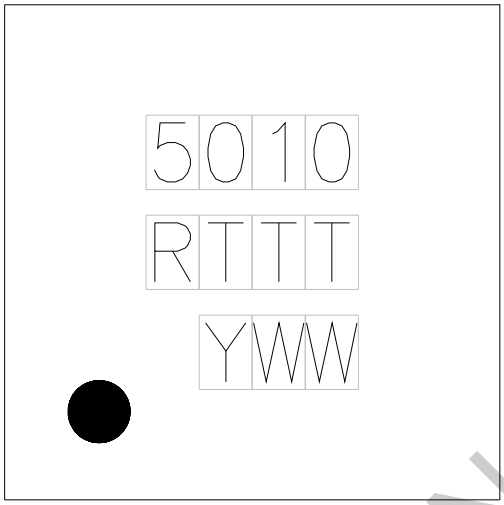

Figure 11. Si5010 Top Marking

Table 9. Top Marking Explanation

Part Number	Die Revision (R)	Assembly Date (YWW)
Si5010-B-GM	B	Y = Last digit of current year WW = Work week

Not Recommended for New Designs

8. Package Outline

Figure 12 illustrates the package details for the Si5010. Table 10 lists the values for the dimensions shown in the illustration.

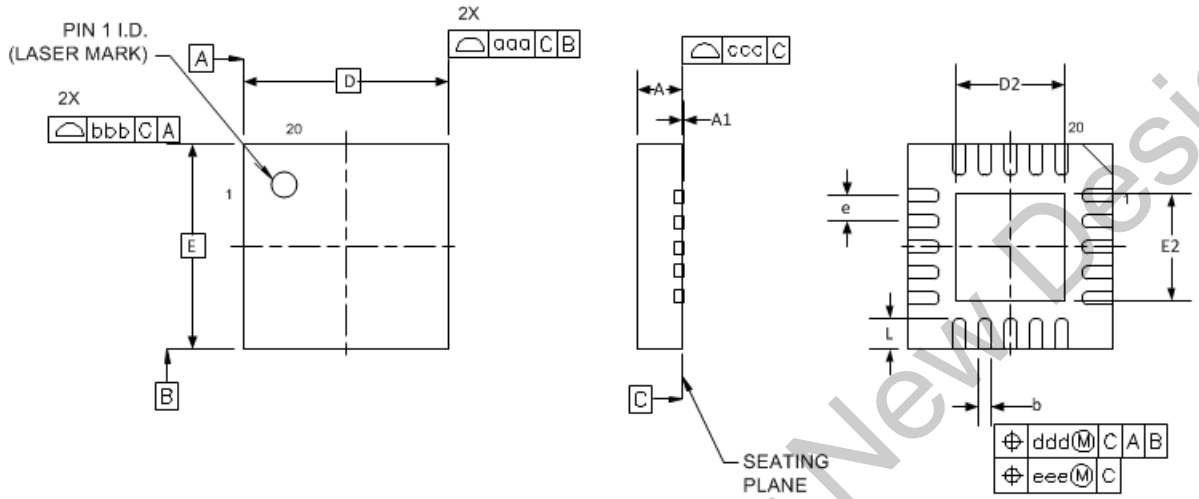

Figure 12. 20-pin Quad Flat No-Lead (QFN)

Table 10. Package Dimensions

Dimension	Min	Nom	Max
A	0.80	0.85	0.90
A1	0.00	0.02	0.05
b	0.18	0.25	0.30
D		4.00 BSC	
D2	2.0	2.10	2.20
e		0.50 BSC	
E		4.00 BSC	

Dimension	Min	Nom	Max
E2	2.0	2.10	2.20
L	0.50	0.60	0.70
aaa		0.15	
bbb		0.10	
ccc		0.08	
ddd		0.05	
eee		0.05	

Notes:

1. All dimensions shown are in millimeters (mm) unless otherwise noted.
2. Dimensioning and Tolerancing per ANSI Y14.5M-1994.
3. This drawing conforms to JEDEC outline MO-220, variation VGGD-1.
4. Recommended card reflow profile is per the JEDEC/IPC J-STD-020C specification for Small Body Components.

Not Recommended for New Designs

9. 4x4 mm 20L QFN Recommended PCB Layout

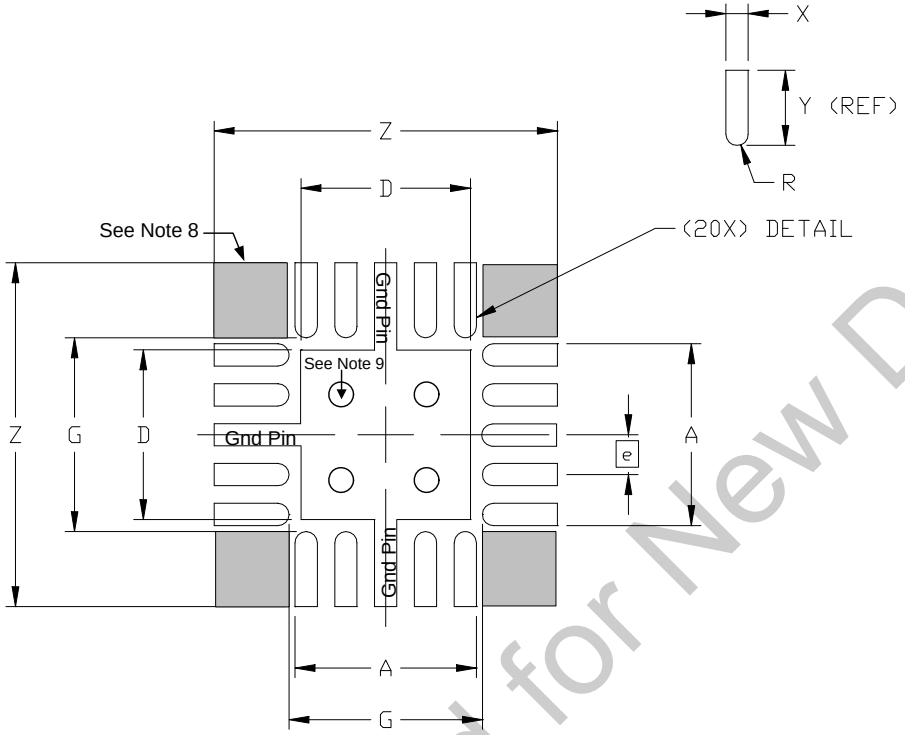

Figure 13. 4x4 mm 20L QFN PCB Layout

Table 11. PCB Land Pattern Dimensions

Symbol	Parameter	Dimensions		
		Min	Nom	Max
A	Pad Row/Column Width/Length	2.23	2.25	2.28
D	Thermal Pad Width/Height	2.03	2.08	2.13
e	Pad Pitch	—	0.50 BSC	—
G	Pad Row/Column Separation	2.43	2.46	2.48
R	Pad Radius	—	0.12 REF	—

Notes:

1. All dimensions listed are in millimeters (mm).
2. The perimeter pads are to be Non-Solder Mask Defined (NSMD). Solder mask openings should be designed to leave 60-75 mm separation between solder mask and pad metal, all the way around the pad.
3. The center thermal pad is to be Solder Mask Defined (SMD).
4. Thermal/Ground vias placed in the center pad should be no less than 0.2 mm (8 mil) diameter and tented from the top to prevent solder from flowing into the via hole.
5. The stencil aperture should match the pad size (1:1 ratio) for the perimeter pads. A 3x3 array of 0.5 mm square stencil openings, on a 0.65 mm pitch, should be used for the center thermal pad.
6. A stencil thickness of 5 mil is recommended. The stencil should be laser cut and electropolished, with trapezoidal walls to facilitate paste release.
7. A “No-Clean”, Type 3 solder paste should be used for assembly. Nitrogen purge during reflow is recommended.
8. Do not place any signal or power plane vias in these “keep out” regions.
9. Suggest four 0.38 mm (15 mil) vias to the ground plane.

Not Recommended for New Designs

Table 11. PCB Land Pattern Dimensions (Continued)

X	Pad Width	0.23	0.25	0.28
Y	Pad Length	—	0.94 REF	—
Z	Pad Row/Column Extents	4.26	4.28	4.31

Notes:

1. All dimensions listed are in millimeters (mm).
2. The perimeter pads are to be Non-Solder Mask Defined (NSMD). Solder mask openings should be designed to leave 60-75 mm separation between solder mask and pad metal, all the way around the pad.
3. The center thermal pad is to be Solder Mask Defined (SMD).
4. Thermal/Ground vias placed in the center pad should be no less than 0.2 mm (8 mil) diameter and tented from the top to prevent solder from flowing into the via hole.
5. The stencil aperture should match the pad size (1:1 ratio) for the perimeter pads. A 3x3 array of 0.5 mm square stencil openings, on a 0.65 mm pitch, should be used for the center thermal pad.
6. A stencil thickness of 5 mil is recommended. The stencil should be laser cut and electropolished, with trapezoidal walls to facilitate paste release.
7. A “No-Clean”, Type 3 solder paste should be used for assembly. Nitrogen purge during reflow is recommended.
8. Do not place any signal or power plane vias in these “keep out” regions.
9. Suggest four 0.38 mm (15 mil) vias to the ground plane.

Not Recommended for New Designs

DOCUMENT CHANGE LIST

Revision 1.0 to Revision 1.1

- Added "7. Top Marking" on page 17.
- Updated “8. Package Outline: Si5010-BM” on page 17.
- Added "9. 4x4 mm 20L QFN Recommended PCB Layout" on page 19.

Revision 1.1 to Revision 1.2

- Made minor note corrections to "9. 4x4 mm 20L QFN Recommended PCB Layout" on page 19.

Revision 1.2 to Revision 1.3

- Global change: MLP to QFN.
- Updated "6. Ordering Guide" on page 16.
- Updated "7. Top Marking" on page 17.
- Updated "8. Package Outline" on page 18.
- Updated "9. 4x4 mm 20L QFN Recommended PCB Layout" on page 19.

Revision 1.3 to Revision 1.4

- Changed Minimum Output Clock Rate to 150 MHz in Table 3 on page 7.
- Added "7. Top Marking" on page 17.
- Updated "6. Ordering Guide" on page 16.
- Updated "8. Package Outline" on page 18.

Revision 1.4 to Revision 1.5

- Updated “8. Package Outline”

Not Recommended for New Designs

ClockBuilder Pro

One-click access to Timing tools, documentation, software, source code libraries & more. Available for Windows and iOS (CBGo only).

www.silabs.com/CBPro

Not Recommended for New Designs

Timing Portfolio
www.silabs.com/timing

SW/HW
www.silabs.com/CBPro

Quality
www.silabs.com/quality

Support and Community
community.silabs.com

Disclaimer
Silicon Laboratories intends to provide customers with the latest, accurate, and in-depth documentation of all peripherals and modules available for system and software implementers using or intending to use the Silicon Laboratories products. Characterization data, available modules and peripherals, memory sizes and memory addresses refer to each specific device, and "Typical" parameters provided can and do vary in different applications. Application examples described herein are for illustrative purposes only. Silicon Laboratories reserves the right to make changes without further notice and limitation to product information, specifications, and descriptions herein, and does not give warranties as to the accuracy or completeness of the included information. Silicon Laboratories shall have no liability for the consequences of use of the information supplied herein. This document does not imply or express copyright licenses granted hereunder to design or fabricate any integrated circuits. The products must not be used within any Life Support System without the specific written consent of Silicon Laboratories. A "Life Support System" is any product or system intended to support or sustain life and/or health, which, if it fails, can be reasonably expected to result in significant personal injury or death. Silicon Laboratories products are generally not intended for military applications. Silicon Laboratories products shall under no circumstances be used in weapons of mass destruction including (but not limited to) nuclear, biological or chemical weapons, or missiles capable of delivering such weapons.

Trademark Information
Silicon Laboratories Inc., Silicon Laboratories, Silicon Labs, SiLabs and the Silicon Labs logo, CMEMS®, EFM, EFM32, EFR, Energy Micro, Energy Micro logo and combinations thereof, "the world's most energy friendly microcontrollers", Ember®, EZLink®, EZMac®, EZRadio®, EZRadioPRO®, DSPLL®, ISOmodem ®, Precision32®, ProSLIC®, SiPHY®, USBXpress® and others are trademarks or registered trademarks of Silicon Laboratories Inc. ARM, CORTEX, Cortex-M3 and THUMB are trademarks or registered trademarks of ARM Holdings. Keil is a registered trademark of ARM Limited. All other products or brand names mentioned herein are trademarks of their respective holders.

Silicon Laboratories Inc.
400 West Cesar Chavez
Austin, TX 78701
USA

http://www.silabs.com

Mouser Electronics

Authorized Distributor

Click to View Pricing, Inventory, Delivery & Lifecycle Information:

Silicon Laboratories:

SI5010-B-GMR SI5010-B-GM