Low Voltage Compandor

SA575

The SA575 is a precision dual gain control circuit designed for low voltage applications. The SA575's channel 1 is an expandor, while channel 2 can be configured either for expandor, compressor, or automatic level controller (ALC) application.

Features

- Operating Voltage Range from 3.0 V to 7.0 V
- Reference Voltage of 100 mV_{RMS} = 0 dB
- One Dedicated Summing Op Amp Per Channel and Two Extra Uncommitted Op Amps
- 600 Ω Drive Capability
- Single or Split Supply Operation
- Wide Input/Output Swing Capability
- These Devices are Pb−Free, Halogen Free/BFR Free and are RoHS Compliant

Applications

- Portable Communications
- Cellular Radio
- Cordless Telephone
- Consumer Audio
- Portable Broadcast Mixers
- Wireless Microphones
- Modems
- Electric Organs
- Hearing Aids

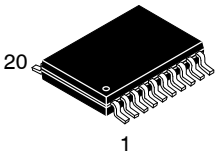

TSSOP−20
DTB SUFFIX
CASE 948E

MARKING DIAGRAM

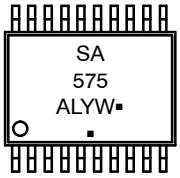

A = Assembly Location
WL, L = Wafer Lot
YY, Y = Year
WW, W = Work Week
▪ = Pb−Free Package

(Note: Microdot may be in either location)

PIN CONNECTIONS

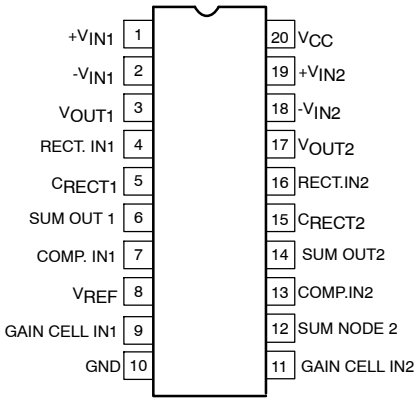

ORDERING INFORMATION

See detailed ordering and shipping information in the package dimensions section on page 12 of this data sheet.

© Semiconductor Components Industries, LLC, 2006

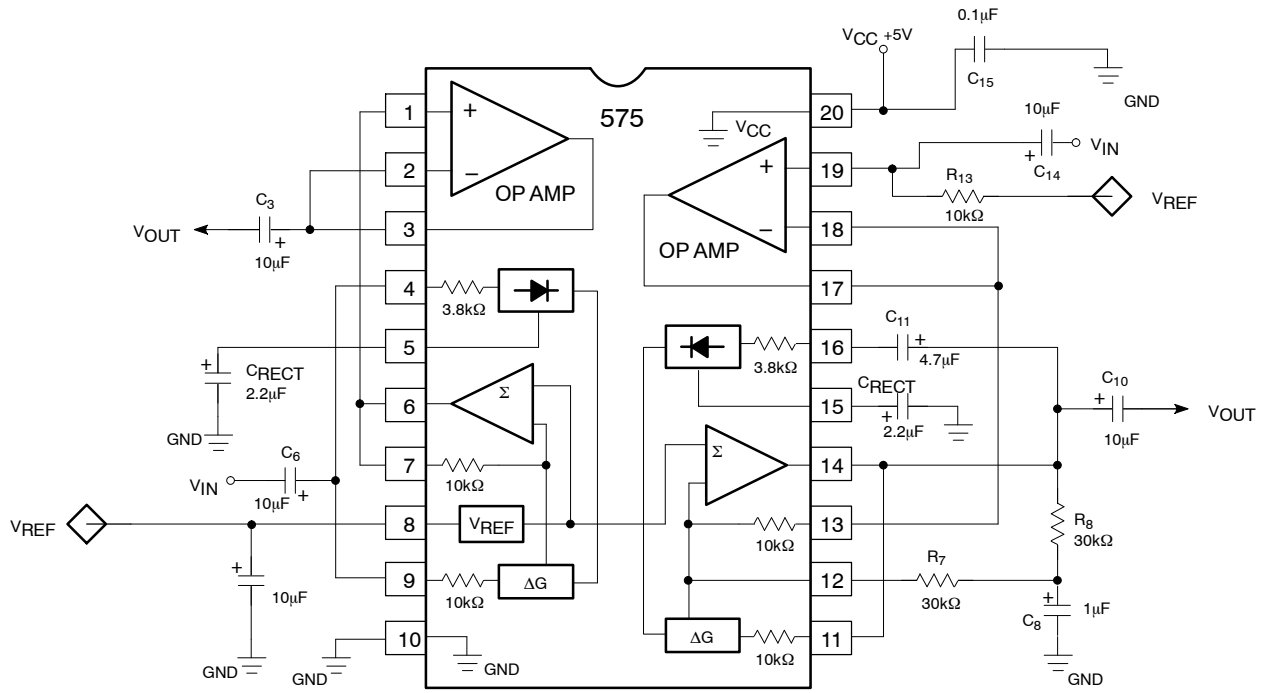

Figure 1. Block Diagram and Test Circuit

PIN FUNCTION DESCRIPTION

Pin	Symbol	Description
1	$+V_{IN1}$	Non−Inverted Input 1
2	$-V_{IN1}$	Inverted Input 1
3	V_{OUT}	Output
4	RECT. IN1	Rectifier 1 Input
5	C_{RECT1}	External Capacitor Pinout for Rectifier 1
6	SUM OUT1	Summation Output 1
7	COMP. IN1	Compensator Pin
8	V_{REF}	Voltage Reference
9	GAIN CELL IN1	Variable Gain Cell Input 1
10	GND	Ground
11	GAIN CELL IN2	Variable Gain Cell Input 2
12	SUM NODE 2	Summation Node 2
13	COMP. IN2	Compensator Pin
14	SUM OUT2	Summation Output 2
15	C_{RECT2}	External Capacitor Pinout for Rectifier 2
16	RECT. IN2	Rectifier 2 Input
17	V_{OUT2}	Output 2
18	$-V_{IN2}$	Inverted Input 2
19	$+V_{IN2}$	Non−Inverted Input 2
20	V_{CC}	Positive Power Supply

MAXIMUM RATINGS

Rating	Symbol	Value	Unit
Single Supply Voltage	V_{CC}	−0.3 to 8.0	V
Voltage Applied to Any Other Pin	V_{IN}	−0.3 to (V_{CC} + 0.3)	V
Operating Ambient Temperature Range	T_A	-40 to +85	°C
Operating Junction Temperature	T_J	150	°C
Storage Temperature Range	T_{STG}	150	°C
Thermal Impedance	θ_{JA}	124	°C/W
Maximum Power Dissipation	P_D	1068	mW

Stresses exceeding those listed in the Maximum Ratings table may damage the device. If any of these limits are exceeded, device functionality should not be assumed, damage may occur and reliability may be affected.

DC ELECTRICAL CHARACTERISTICS Typical values are at T_A = 25°C. Minimum and Maximum values are for the full operating temperature range: -40 to +85°C for SA575, except SSOP package is tested at +25°C only. V_{CC} = 5.0 V, unless otherwise stated. Both channels are tested in the Expandor mode (see Test Circuit).

Characteristic	Symbol	Test Conditions	Min	Typ	Max	Unit
FOR COMPANDOR, INCLUDING SUMMING AMPLIFIER						
Supply Voltage (Note 1)	V_{CC}	–	3.0	5.0	7.0	V
Supply Current	I_{CC}	No Signal	3.0	4.2	5.5	mA
Reference Voltage (Note 2)	V_{REF}	V_{CC} = 5.0 V	2.4	2.5	2.6	V
Summing Amp Output Load	R_L	–	10	–	–	kΩ
Total Harmonic Distortion	THD	1.0 kHz, 0 dB, BW = 3.5 kHz	–	0.12	1.5	%
Output Voltage Noise	E_{NO}	BW = 20 kHz, R_S = 0 Ω	–	6.0	30	μV
Unity Gain Level	0dB	1.0 kHz	-1.5	–	1.5	dB
Output Voltage Offset	V_{OS}	No Signal	-150	–	150	mV
Output DC Shift		No Signal to 0 dB	-100	–	100	mV
Tracking Error Relative to 0 dB		Gain Cell Input = 0 dB, 1.0 kHz Rectifier Input = 6.0 dB, 1.0 kHz	-1.0	–	1.0	dB
		Gain Cell Input = 0 dB, 1.0 kHz Rectifier Input = -30 dB, 1.0 kHz	-1.0	–	1.0	dB
Crosstalk		1.0 kHz, 0 dB, C_{REF} = 220 μF	–	-80	-65	dB
FOR OPERATIONAL AMPLIFIER						
Output Swing	V_O	R_L = 10 kΩ	V_{CC}-0.4	V_{CC}	–	V
Output Load	R_L	1.0 kHz	600	–	–	Ω
Input Common-Mode Range	CMR	–	0	–	V_{CC}	V
Common-Mode Rejection Ratio	CMRR	–	60	80	–	dB
Input Bias Current	I_B	V_{IN} = 0.5 V to 4.5 V	-1.0	–	1.0	μA
Input Offset Voltage	V_{OS}	–	–	3.0	–	mV
Open-Loop Gain	A_{VOL}	R_L = 10 kΩ	–	80	–	dB
Slew Rate	SR	Unity Gain	–	1.0	–	V/μs
Bandwidth	GBW	Unity Gain	–	3.0	–	MHz
Input Voltage Noise	E_{NI}	BW = 20 kHz	–	2.5	–	μV
Power Supply Rejection Ratio	PSRR	1.0 kHz, 250 mV	–	60	–	dB

1. Operation down to V_{CC} = 2.0 V is possible, but performance is reduced. See curves in Figures 6 and 7.
2. Reference voltage, V_{REF}, is typically at 1/2 V_{CC}.

Functional Description

This section describes the basic subsystems and applications of the SA575 Compandor. More theory of operation on compandors can be found in AND8159 and AND8160. The typical applications of the SA575 low voltage compandor in an Expandor (1:2), Compressor (2:1) and Automatic Level Control (ALC) function are explained. These three circuit configurations are shown in Figures 2, 3, and 4 respectively.

The SA575 has two channels for a complete companding system. The left channel, A, can be configured as a 1:2 Expandor while the right channel, B, can be configured as either a 2:1 Compressor, a 1:2 Expandor or an ALC. Each channel consists of the basic companding building blocks of rectifier cell, variable gain cell, summing amplifier and V_{REF} cell. In addition, the SA575 has two additional high performance uncommitted op amps which can be utilized for application such as filtering, pre-emphasis/ de-emphasis or buffering.

Figure 5 shows the complete schematic for the applications demo board. Channel A is configured as an expandor while channel B is configured so that it can be used either as a compressor or as an ALC circuit. The switch, S_1, toggles the circuit between compressor and ALC mode. Jumpers J_1 and J_2 can be used to either include the additional op amps for signal conditioning or exclude them from the signal path. Bread boarding space is provided for R_1, R_2, C_1, C_2, R_{10}, R_{11}, C_{10} and C_{11} so that the response can be tailored for each individual need. The components as specified are suitable for the complete audio spectrum from 20 Hz to 20 kHz.

The most common configuration is as a unity gain non-inverting buffer where R_1, C_1, C_2, R_{10}, C_{10} and C_{11} are eliminated and R_2 and R_{11} are shorted. Capacitors C_3, C_5, C_8, and C_{12} are for DC blocking. In systems where the inputs and outputs are AC coupled, these capacitors and resistors can be eliminated. Capacitors C_4 and C_9 are for setting the attack and release time constant.

C_6 is for decoupling and stabilizing the voltage reference circuit. The value of C_6 should be such that it will offer a very low impedance to the lowest frequencies of interest. Too small a capacitor will allow supply ripple to modulate the audio path. The better filtered the power supply, the smaller this capacitor can be. R_{12} provides DC reference voltage to the amplifier of channel B. R_6 and R_7 provide a DC feedback path for the summing amp of channel B, while C_7 is a short-circuit to ground for signals. C_{14} and C_{15} are for power supply decoupling. C_{14} can also be eliminated if the power supply is well regulated with very low noise and ripple.

Demonstrated Performance

The applications demo board was built and tested for a frequency range of 20 Hz to 20 kHz with the component values as shown in Figure 5 and V_{CC} = 5.0 V. In the expandor mode, the typical input dynamic range was from -34 dB to +12 dB where 0 dB is equal to 100 mV_{RMS}. The typical unity gain level measured at 0 dB @ 1.0 kHz input was $\pm$0.5 dB and the typical tracking error was $\pm$0.1 dB for input range of -30 to +10 dB.

In the compressor mode, the typical input dynamic range was from -42 dB to $\pm$18 dB with a tracking error +0.1 dB and the typical unity gain level was $\pm$0.5 dB.

In the ALC mode, the typical input dynamic range was from -42 dB to +8.0 dB with typical output deviation of $\pm$0.2 dB about the nominal output of 0 dB. For input greater than +9.0 dB in ALC configuration, the summing amplifier sometimes exhibits high frequency oscillations. There are several solutions to this problem. The first is to lower the values of R_6 and R_7 to 20 kΩ each. The second is to add a current limiting resistor in series with C12 at Pin 13. The third is to add a compensating capacitor of about 22 to 30 pF between the input and output of summing amplifier (Pins 12 and 14). With any one of the above recommendations, the typical ALC mode input range increased to +18 dB yielding a dynamic range of over 60 dB.

Expandor

The typical expandor configuration is shown in Figure 2. The variable gain cell and the rectifier cell are in the signal input path. The V_{REF} is always 1/2 V_{CC} to provide the maximum headroom without clipping. The 0 dB ref is 100 mV_{RMS}. The input is AC coupled through C_5, and the output is AC coupled through C_3. If in a system the inputs and outputs are AC coupled, then C_3 and C_5 can be eliminated, thus requiring only one external component, C_4. The variable gain cell and rectifier cell are DC coupled so any offset voltage between Pins 4 and 9 will cause small offset error current in the rectifier cell. This will affect the accuracy of the gain cell. This can be improved by using an extra capacitor from the input to Pin 4 and eliminating the DC connection between Pins 4 and 9.

The expandor gain expression and the attack and release time constant is given by Equation 1 and Equation 2, respectively.

$$\text{Expandor gain} = \left(\frac{4V_{IN}(avg)}{3.8\ k\Omega \times 100\ \mu A}\right)^2 \qquad \text{(eq. 1)}$$

$$\text{where } V_{IN}(avg) = 0.95V_{IN(RMS)}$$

$$\tau_R = \tau_A = 10\ k\Omega \times C_{RECT} = 10\ k\Omega \times C_4 \qquad \text{(eq. 2)}$$

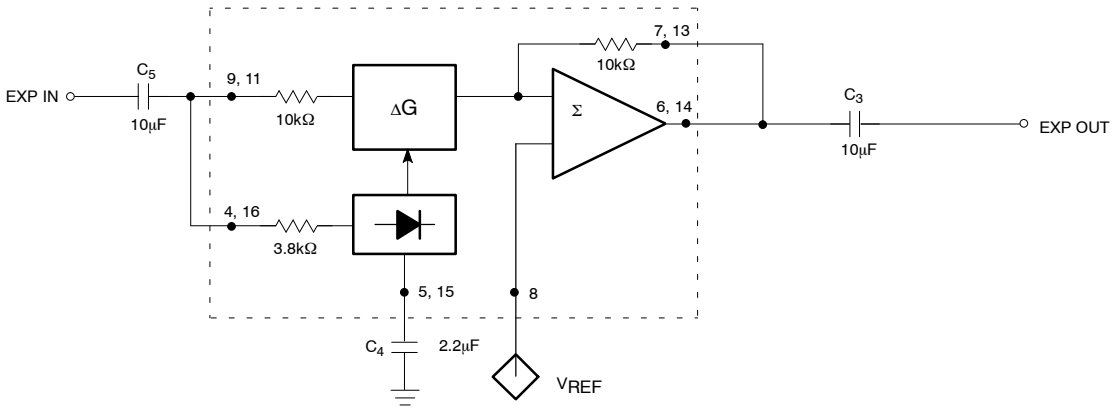

Figure 2. Typical Expandor Configuration

Compressor

The typical compressor configuration is shown in Figure 3. In this mode, the rectifier cell and variable gain cell are in the feedback path. R_6 and R_7 provide the DC feedback to the summing amplifier. The input is AC coupled through C_{12} and output is AC coupled through C_8. In a system with inputs and outputs AC coupled, C_8 and C_{12} could be eliminated and only R_6, R_7, C_7, and C_{13} would be required. If the external components R_6, R_7 and C_7 are eliminated, then the output of the summing amplifier will motor-boat in absence of signals or at extremely low signals. This is because there is no DC feedback path from the output to input. In the presence of an AC signal this phenomenon is not observed and the circuit will appear to function properly.

The compressor gain expression and the attack and release time constant is given by Equation 3 and Equation 4, respectively.

$$\text{Compressor gain} = \left[\frac{3.8\ \text{k}\Omega \times 100\ \mu\text{A}}{4V_{IN}(\text{avg})}\right]^{1/2} \quad \text{(eq. 3)}$$

$$\text{where } V_{IN}(\text{avg}) = 0.95V_{IN(RMS)}$$

$$\tau_R = \tau_A = 10\ \text{k}\Omega \times C_{RECT} = 10\ \text{k}\Omega \times C_4 \quad \text{(eq. 4)}$$

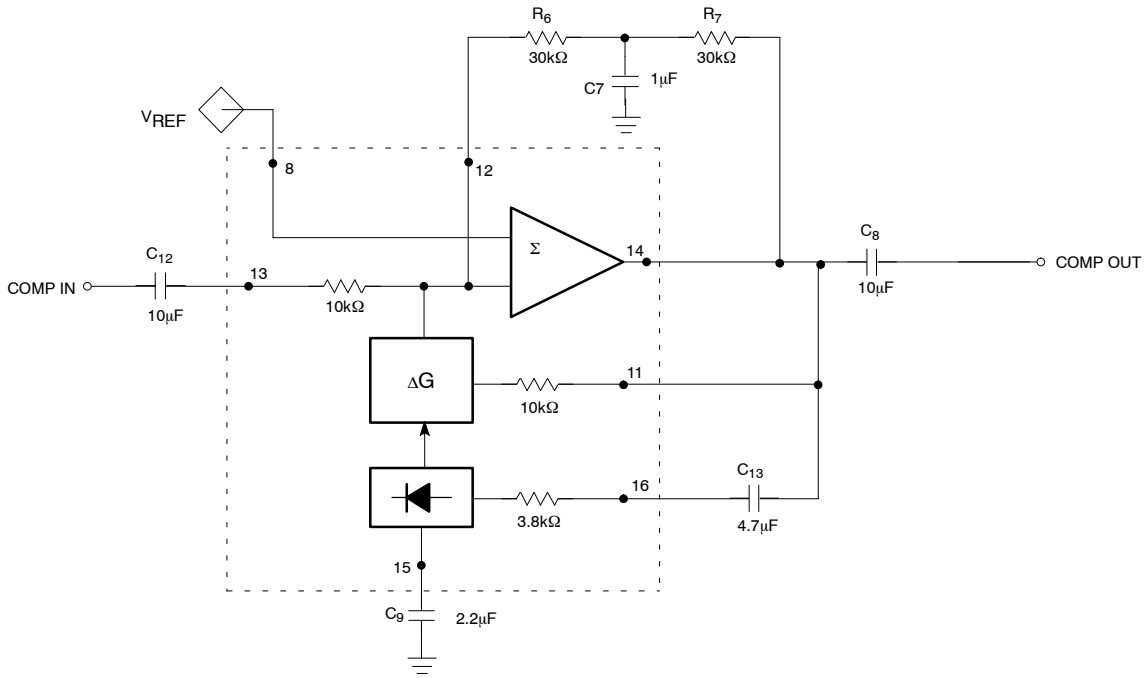

Figure 3. Typical Compressor Configuration

Automatic Level Control

The typical Automatic Level Control circuit configuration is shown in Figure 4. It can be seen that it is quite similar to the compressor schematic except that the input to the rectifier cell is from the input path and not from the feedback path. The input is AC coupled through C_{12} and C_{13} and the output is AC coupled through C_8. Once again, as in the previous cases, if the system input and output signals are already AC coupled, then C_{12}, C_{13} and C_8 could be eliminated. Concerning the compressor, removing R_6, R_7 and C_7 will cause motor-boating in absence of signals. C_{COMP} is necessary to stabilize the summing amplifier at higher input levels. This circuit provides an input dynamic range greater than 60 dB with the output within ± 0.5 dB typical. The necessary design expressions are given by Equation 5 and Equation 6, respectively.

$$\text{ALC gain} = \frac{3.8\ \text{k}\Omega \times 100\ \mu\text{A}}{4V_{IN}(\text{avg})} \qquad \text{(eq. 5)}$$

$$\tau_R = \tau_A = 10\ \text{k}\Omega \times C_{RECT} = 10\ \text{k}\Omega \times C_9 \qquad \text{(eq. 6)}$$

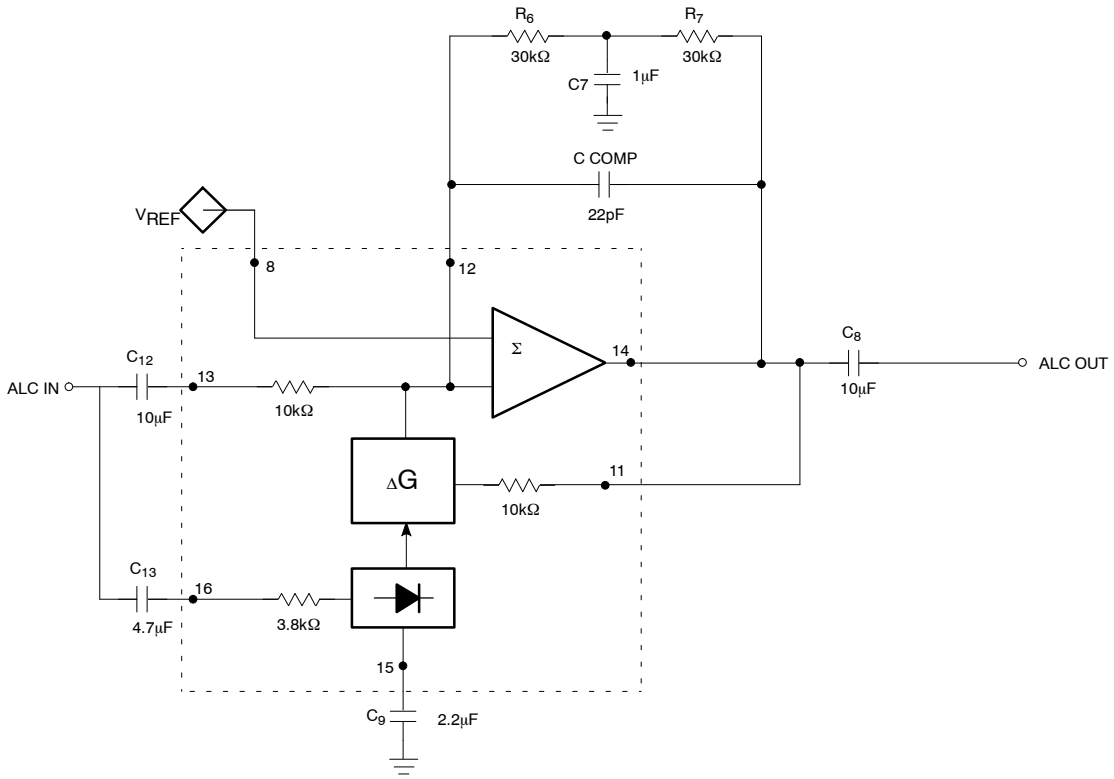

Figure 4. Typical ALC Configuration

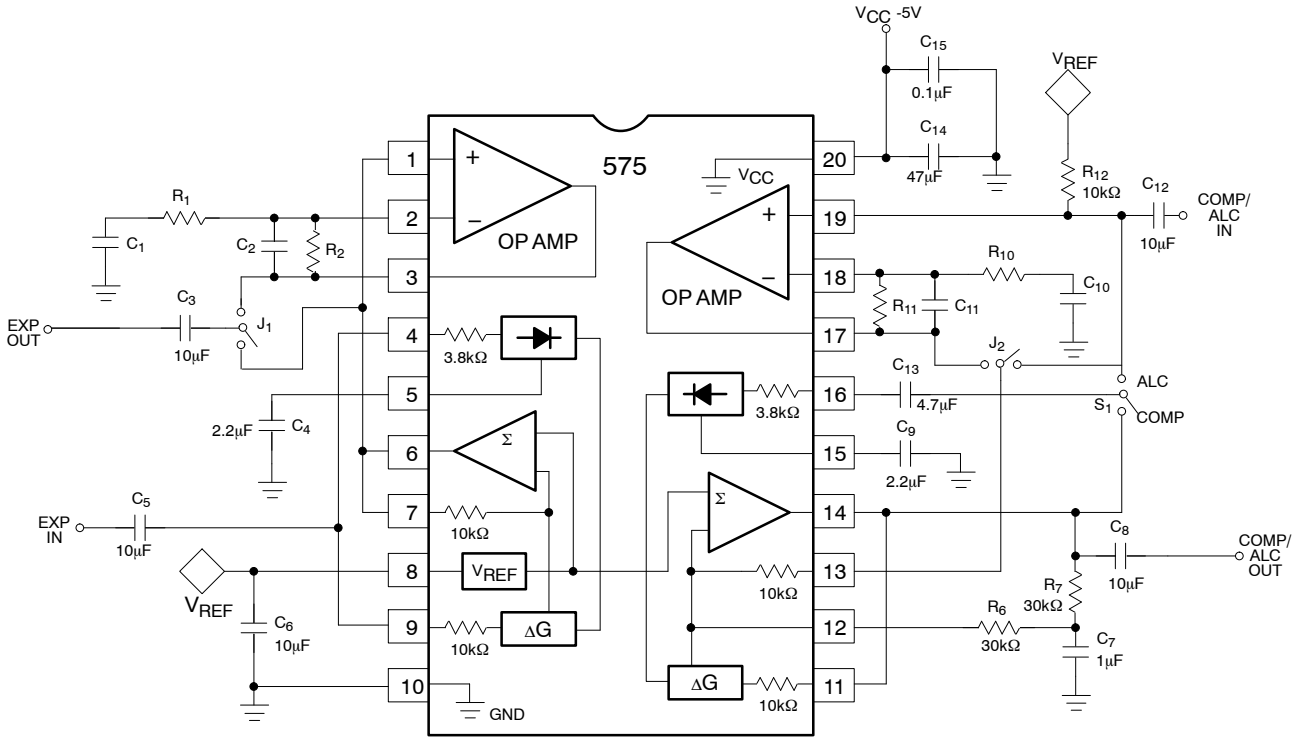

Figure 5. SA575 Low Voltage Expandor/Compressor/ALC Demo Board

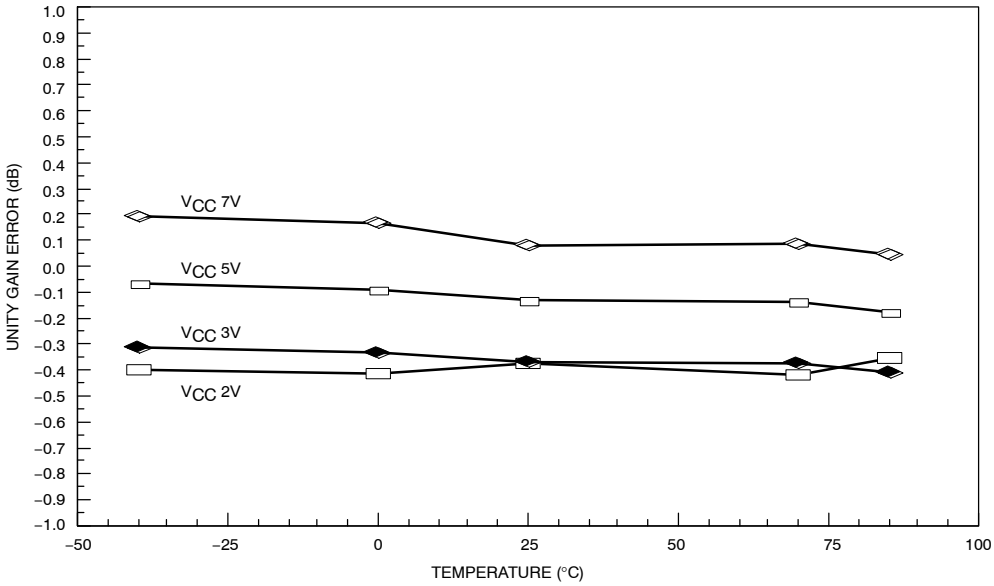

Figure 6. Unity Gain Error vs. Temperature and V_{CC}

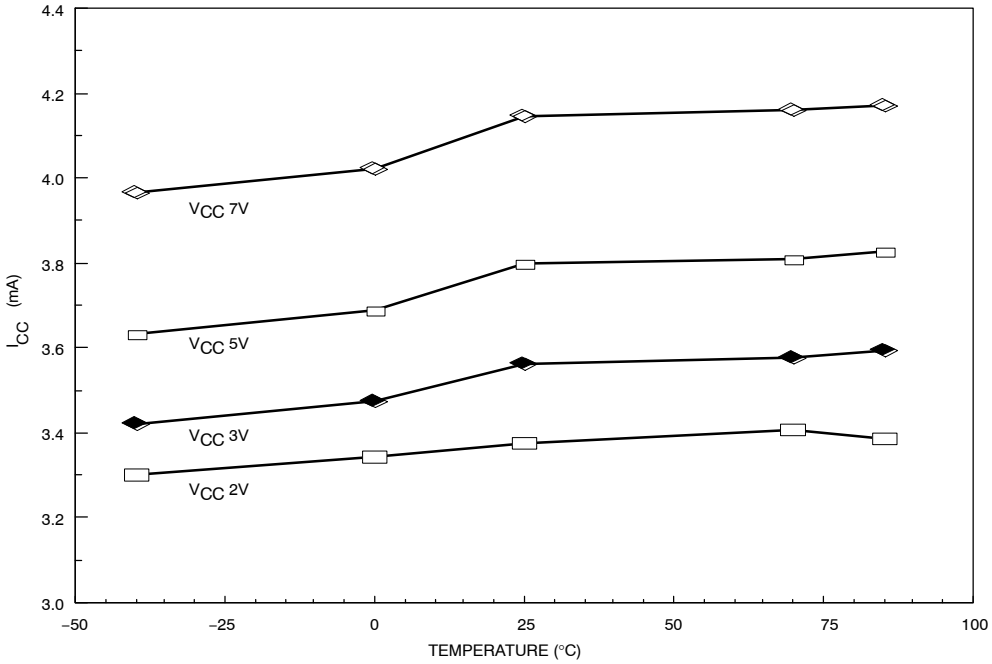

Figure 7. I_{CC} vs. Temperature and V_{CC}

TYPICAL PERFORMANCE CHARACTERISTICS

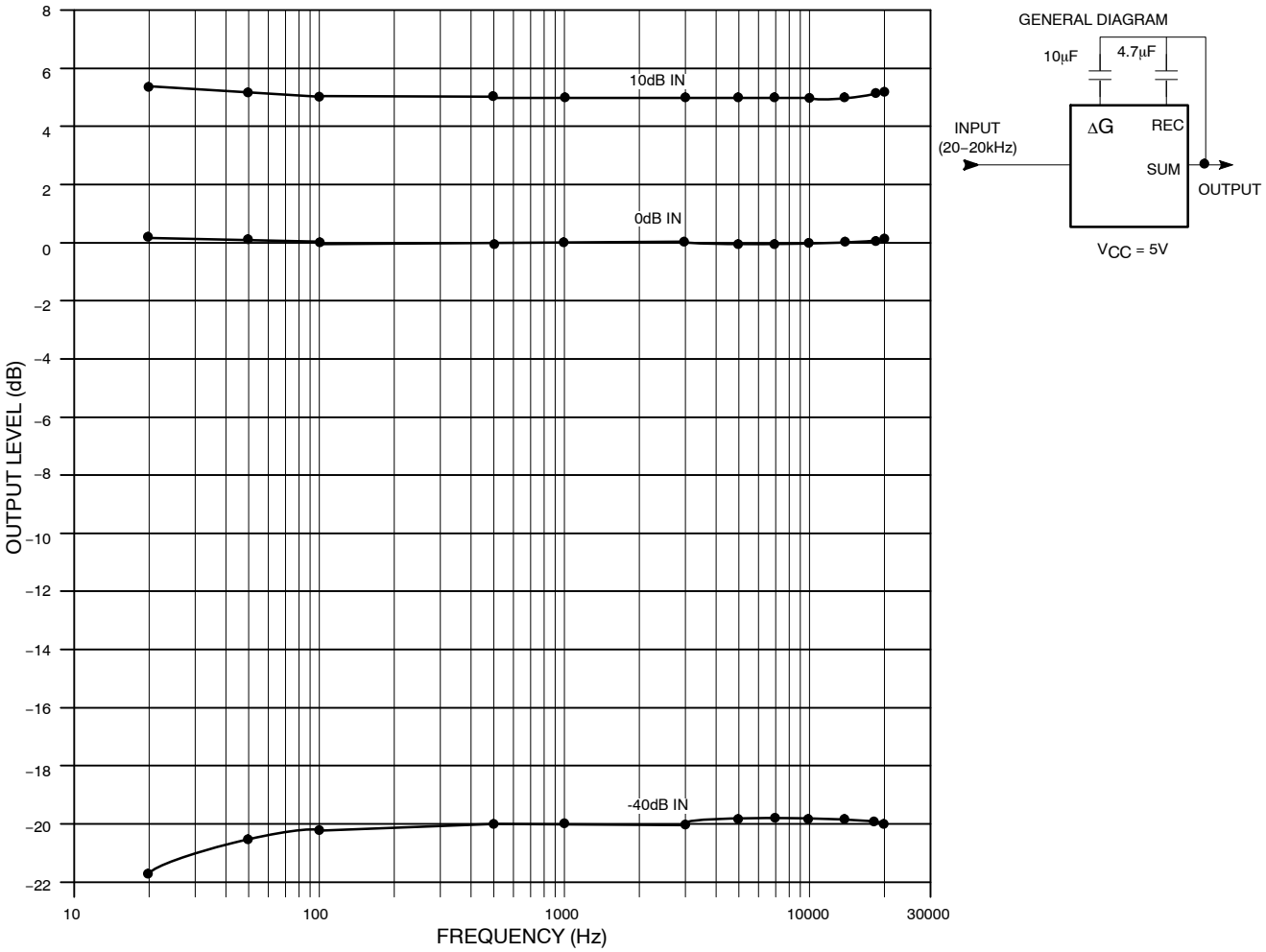

Figure 8. Compressor Output Frequency Response

TYPICAL PERFORMANCE CHARACTERISTICS

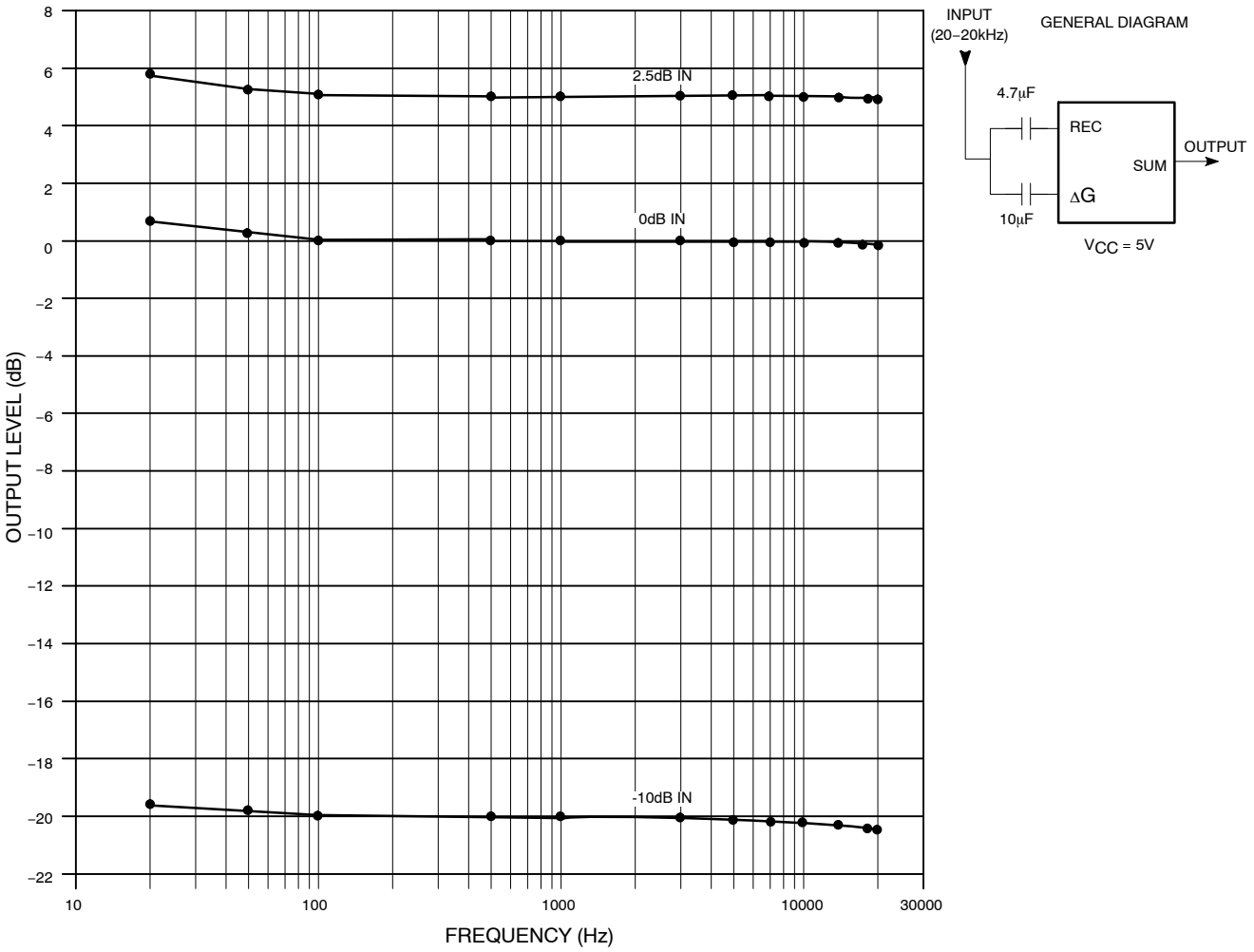

Figure 9. Expandor Output Frequency Response

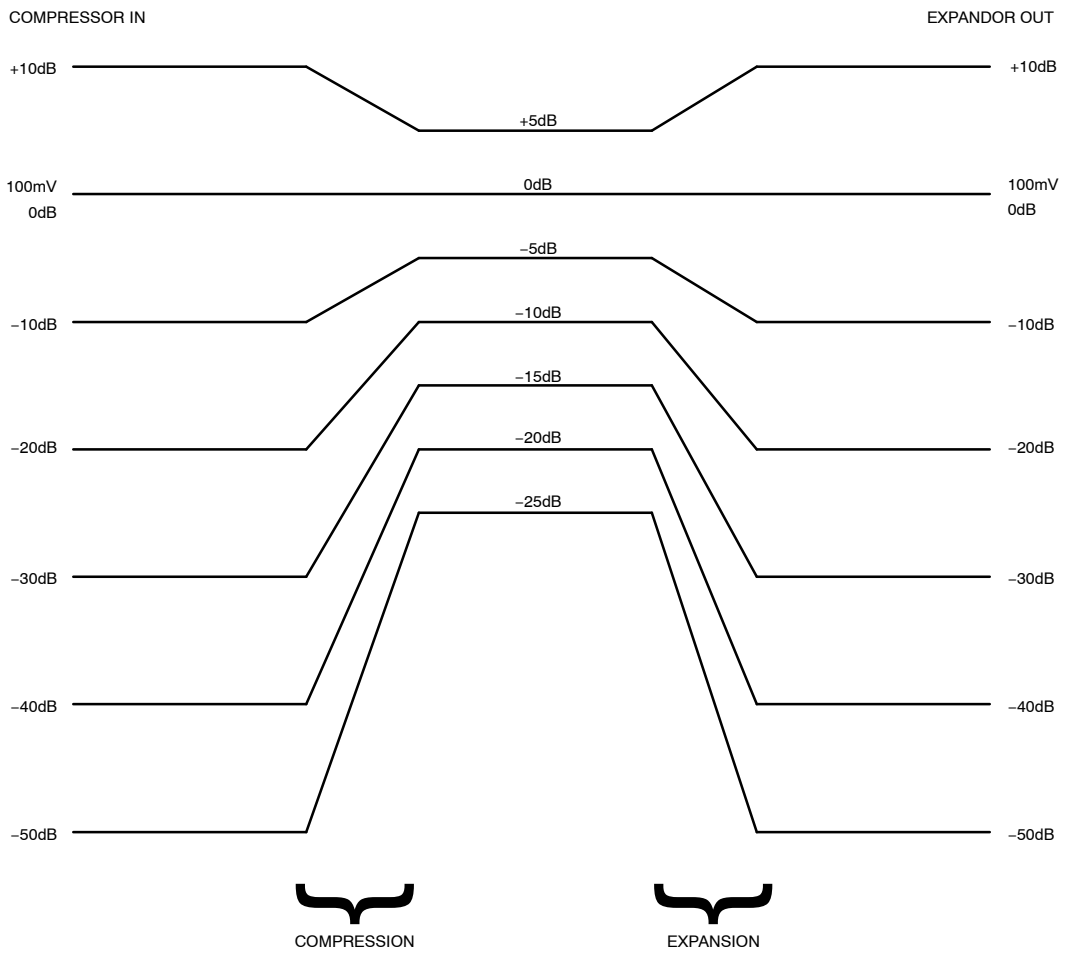

Figure 10. The Companding Function

ORDERING INFORMATION

Device	Package	Temperature Range	Shipping†
SA575DTBR2G	TSSOP−20 (Pb−Free)	−40 to +85°C	2500 / Tape & Reel

†For information on tape and reel specifications, including part orientation and tape sizes, please refer to our Tape and Reel Packaging Specification Brochure, BRD8011/D.

onsemi, onsemi, and other names, marks, and brands are registered and/or common law trademarks of Semiconductor Components Industries, LLC dba "**onsemi**" or its affiliates and/or subsidiaries in the United States and/or other countries. **onsemi** owns the rights to a number of patents, trademarks, copyrights, trade secrets, and other intellectual property. A listing of **onsemi**'s product/patent coverage may be accessed at www.onsemi.com/site/pdf/Patent−Marking.pdf. **onsemi** reserves the right to make changes at any time to any products or information herein, without notice. The information herein is provided "as−is" and **onsemi** makes no warranty, representation or guarantee regarding the accuracy of the information, product features, availability, functionality, or suitability of its products for any particular purpose, nor does **onsemi** assume any liability arising out of the application or use of any product or circuit, and specifically disclaims any and all liability, including without limitation special, consequential or incidental damages. Buyer is responsible for its products and applications using **onsemi** products, including compliance with all laws, regulations and safety requirements or standards, regardless of any support or applications information provided by **onsemi**. "Typical" parameters which may be provided in **onsemi** data sheets and/or specifications can and do vary in different applications and actual performance may vary over time. All operating parameters, including "Typicals" must be validated for each customer application by customer's technical experts. **onsemi** does not convey any license under any of its intellectual property rights nor the rights of others. **onsemi** products are not designed, intended, or authorized for use as a critical component in life support systems or any FDA Class 3 medical devices or medical devices with a same or similar classification in a foreign jurisdiction or any devices intended for implantation in the human body. Should Buyer purchase or use **onsemi** products for any such unintended or unauthorized application, Buyer shall indemnify and hold **onsemi** and its officers, employees, subsidiaries, affiliates, and distributors harmless against all claims, costs, damages, and expenses, and reasonable attorney fees arising out of, directly or indirectly, any claim of personal injury or death associated with such unintended or unauthorized use, even if such claim alleges that **onsemi** was negligent regarding the design or manufacture of the part. **onsemi** is an Equal Opportunity/Affirmative Action Employer. This literature is subject to all applicable copyright laws and is not for resale in any manner.

ADDITIONAL INFORMATION

TECHNICAL PUBLICATIONS:
Technical Library: www.onsemi.com/design/resources/technical−documentation
onsemi Website: www.onsemi.com

ONLINE SUPPORT: www.onsemi.com/support
For additional information, please contact your local Sales Representative at
www.onsemi.com/support/sales