S29GL01GP
S29GL512P
S29GL256P
S29GL128P

1 Gbit, 512, 256, 128 Mbit, 3 V, Page Flash with 90 nm MirrorBit Process Technology

General Description

The Cypress S29GL01G/512/256/128P are Mirrorbit® Flash products fabricated on 90 nm process technology. These devices offer a fast page access time of 25 ns with a corresponding random access time as fast as 90 ns. They feature a Write Buffer that allows a maximum of 32 words/64 bytes to be programmed in one operation, resulting in faster effective programming time than standard programming algorithms. This makes these devices ideal for today's embedded applications that require higher density, better performance and lower power consumption.

Distinctive Characteristics

- Single 3V read/program/erase (2.7-3.6 V)
- Enhanced VersatileI/O™ control
  - All input levels (address, control, and DQ input levels) and outputs are determined by voltage on V_{IO} input. V_{IO} range is 1.65 to V_{CC}
- 90 nm MirrorBit process technology
- 8-word/16-byte page read buffer
- 32-word/64-byte write buffer reduces overall programming time for multiple-word updates
- Secured Silicon Sector region
  - 128-word/256-byte sector for permanent, secure identification through an 8-word/16-byte random Electronic Serial Number
  - Can be programmed and locked at the factory or by the customer
- Uniform 64 Kword/128 Kbyte Sector Architecture
  - S29GL01GP: One thousand twenty-four sectors
  - S29GL512P: Five hundred twelve sectors
  - S29GL256P: Two hundred fifty-six sectors
  - S29GL128P: One hundred twenty-eight sectors
- 100,000 erase cycles per sector typical
- 20-year data retention typical
- Offered Packages
  - 56-pin TSOP
  - 64-ball Fortified BGA
- Suspend and Resume commands for Program and Erase operations
- Write operation status bits indicate program and erase operation completion
- Unlock Bypass Program command to reduce programming time
- Support for CFI (Common Flash Interface)
- Persistent and Password methods of Advanced Sector Protection
- WP#/ACC input
  - Accelerates programming time (when V_{HH} is applied) for greater throughput during system production
  - Protects first or last sector regardless of sector protection settings
- Hardware reset input (RESET#) resets device
- Ready/Busy# output (RY/BY#) detects program or erase cycle completion

Performance Characteristics

Maximum Read Access Times (ns)					
Density	**Voltage Range (1)**	**Random Access Time (t_{ACC})**	**Page Access Time (t_{PACC})**	**CE# Access Time (t_{CE})**	**OE# Access Time (t_{OE})**
128 & 256 Mb	Regulated V_{CC}	90	25	90	25
	Full V_{CC}	100/110		100/110	
	VersatileIO V_{IO}	110		110	
512 Mb	Regulated V_{CC}	100	25	100	25
	Full V_{CC}	110		110	
	VersatileIO V_{IO}	120		120	
1 Gb	Regulated V_{CC}	110	25	110	25
	Full V_{CC}	120		120	
	VersatileIO V_{IO}	130		130	

Notes

1. *Access times are dependent on V_{CC} and V_{IO} operating ranges.*
   See Ordering Information page for further details.
   Regulated V_{CC}: *V_{CC} = 3.0–3.6 V.*
   Full V_{CC}: *V_{CC} = V_{IO} = 2.7–3.6 V.*
   VersatileIO V_{IO}: *V_{IO} = 1.65–V_{CC}, V_{CC} = 2.7–3.6 V.*
2. *Contact a sales representative for availability.*

Current Consumption (typical values)	
Random Access Read (*f* = 5 MHz)	30 mA
8-Word Page Read (*f* = 10 MHz)	1 mA
Program/Erase	50 mA
Standby	1 µA

Program & Erase Times (typical values)	
Single Word Programming	60 µs
Effective Write Buffer Programming (V_{CC}) Per Word	15 µs
Effective Write Buffer Programming (V_{HH}) Per Word	13.5 µs
Sector Erase Time (64 Kword Sector)	0.5 s

Contents

1. Ordering Information 4
2. Input/Output Descriptions & Logic Symbol 6
3. Block Diagram 7
4. Physical Dimensions/Connection Diagrams 8
4.1 Related Documents 8
4.2 Special Handling Instructions for BGA Package 8
4.3 LAA064—64 ball Fortified Ball Grid Array, 11 x 13 mm. 9
4.4 TS056—56-Pin Standard Thin Small Outline Package (TSOP) 11
5. Additional Resources 12
5.1 Application Notes 12
5.2 Specification Bulletins 12
5.3 Hardware and Software Support 12
5.4 Contacting Cypress 12
6. Product Overview 13
6.1 Memory Map 13
7. Device Operations 15
7.1 Device Operation Table 15
7.2 Word/Byte Configuration 16
7.3 Versatile IO^{TM} (V_{IO}) Control 16
7.4 Read 16
7.5 Page Read Mode 16
7.6 Autoselect 17
7.7 Program/Erase Operations 21
7.8 Write Operation Status 32
7.9 Writing Commands/Command Sequences 36
8. Advanced Sector Protection/Unprotection 38
8.1 Lock Register 39
8.2 Persistent Protection Bits 39
8.3 Persistent Protection Bit Lock Bit 41
8.4 Password Protection Method 41
8.5 Advanced Sector Protection Software Examples 44
8.6 Hardware Data Protection Methods 44
9. Power Conservation Modes 45
9.1 Standby Mode 45
9.2 Automatic Sleep Mode 45
9.3 Hardware RESET# Input Operation 45
9.4 Output Disable (OE#) 45
10. Secured Silicon Sector Flash Memory Region 46
10.1 Factory Locked Secured Silicon Sector 46
10.2 Customer Lockable Secured Silicon Sector 47
10.3 Secured Silicon Sector Entry/Exit Command Sequences 47
11. Electrical Specifications 49
11.1 Absolute Maximum Ratings 49
11.2 Operating Ranges 50
11.3 Test Conditions 50
11.4 Key to Switching Waveforms 51
11.5 Switching Waveforms 51
11.6 DC Characteristics 52
11.7 AC Characteristics 53
12. Appendix 64
12.1 Command Definitions 64
12.2 Common Flash Memory Interface 73
13. Advance Information on S29GL-S Eclipse 65 nm MirrorBit Power-On and Warm Reset Timing 77
14. Document History 79

1. Ordering Information

The ordering part number is formed by a valid combination of the following:

S29GL01GP 12 F F I 01 0

PACKING TYPE
0 = Tray (standard (Note 5))
2 = 7” Tape and Reel
3 = 13” Tape and Reel

MODEL NUMBER (V_{IO} range, protection when WP# =V_{IL})
01 = V_{IO} = V_{CC} = 2.7 to 3.6 V, highest address sector protected
02 = V_{IO} = V_{CC} = 2.7 to 3.6 V, lowest address sector protected
V1 = V_{IO} = 1.65 to V_{CC}, V_{CC} = 2.7 to 3.6 V, highest address sector protected
V2 = V_{IO} = 1.65 to V_{CC}, V_{CC} = 2.7 to 3.6 V, lowest address sector protected
R1 = V_{IO} = V_{CC} = 3.0 to 3.6 V, highest address sector protected
R2 = V_{IO} = V_{CC} = 3.0 to 3.6 V, lowest address sector protected

TEMPERATURE RANGE
I = Industrial (–40°C to +85°C)
C = Commercial (0°C to +85°C)

PACKAGE MATERIALS SET
A = Pb (Note 1)
F = Pb-free

PACKAGE TYPE
T = 56-pin Thin Small Outline Package (TSOP) Standard Pinout(TSO56)
F = 64-ball Fortified Ball Grid Array, 1.0 mm pitch package (LAA064)

SPEED OPTION
90 = 90 ns
10 = 100 ns
11 = 110 ns
12 = 120 ns
13 = 130 ns

DEVICE NUMBER/DESCRIPTION
S29GL01GP, S29GL512P, S29GL256P, S29GL128P
3.0 Volt-only, 1024, 512, 256 and 128 Megabit Page-Mode Flash Memory, manufactured on 90 nm MirrorBit® process technology

Recommended Combinations

Recommended Combinations list configurations planned to be supported in volume for this device. Consult your local sales office to confirm availability of specific recommended combinations and to check on newly released combinations.

S29GL-P Valid Combinations					
Base Part Number	**Speed**	**Package** (2)(3)	**Temperature** (4)	**Model Number**	**Packing Type** (5)
S29GL01GP	11	TA (1), TF	I, C	R1, R2	0, 3
	12		I	01, 02	
	13			V1, V2	
	11	FA (1), FF	I, C	R1, R2	0, 2, 3
	12		I	01, 02	
	13			V1, V2	
S29GL512P	10	TA (1), TF	I, C	R1, R2	0, 3
	11		I	01, 02	
	12			V1, V2	
	10	FA (1), FF	I, C	R1, R2	0, 2, 3
	11		I	01, 02	
	12			V1, V2	
S29GL128P, S29GL256P	90	TA (1), TF	I, C	R1, R2	0, 3
	10, 11		I	01, 02	
	11			V1, V2	
	90	FA (1), FF	I, C	R1, R2	0, 2, 3
	10, 11		I	01, 02	
	11			V1, V2	

Notes

1. *Contact a local sales representative for availability.*
2. *TSOP package marking omits packing type designator from ordering part number.*
3. *BGA package marking omits leading “S29” and packing type designator from ordering part number.*
4. *Operating Temperature range: I = Industrial (–40°C to +85°C)*
   C = Commercial (0°C to +85°C)
5. *Type 0 is standard. Specify other options as required.*

2. Input/Output Descriptions & Logic Symbol

Table identifies the input and output package connections provided on the device.

Input/Output Descriptions

Symbol	Type	Description
A25–A0	Input	Address lines for GL01GP A24–A0 for GL512P A23–A0 for GL256P, A22–A0 for GL128P.
DQ14–DQ0	I/O	Data input/output.
DQ15/A-1	I/O	DQ15: Data input/output in word mode. A-1: LSB address input in byte mode.
CE#	Input	Chip Enable.
OE#	Input	Output Enable.
WE#	Input	Write Enable.
V_{CC}	Supply	Device Power Supply.
V_{IO}	Supply	Versatile IO Input.
V_{SS}	Supply	Ground.
NC	No Connect	Not connected internally.
RY/BY#	Output	Ready/Busy. Indicates whether an Embedded Algorithm is in progress or complete. At V_{IL}, the device is actively erasing or programming. At High Z, the device is in ready.
BYTE#	Input	Selects data bus width. At VIL, the device is in byte configuration and data I/O pins DQ0-DQ7 are active and DQ15/A-1 becomes the LSB address input. At VIH, the device is in word configuration and data I/O pins DQ0-DQ15 are active.
RESET#	Input	Hardware Reset. Low = device resets and returns to reading array data.
WP#/ACC	Input	Write Protect/Acceleration Input. At V_{IL}, disables program and erase functions in the outermost sectors. At V_{HH}, accelerates programming; automatically places device in unlock bypass mode. Should be at V_{IH} for all other conditions. WP# has an internal pull-up; when unconnected, WP# is at V_{IH}.

3. Block Diagram

Figure 3.1 S29GL-P Block Diagram

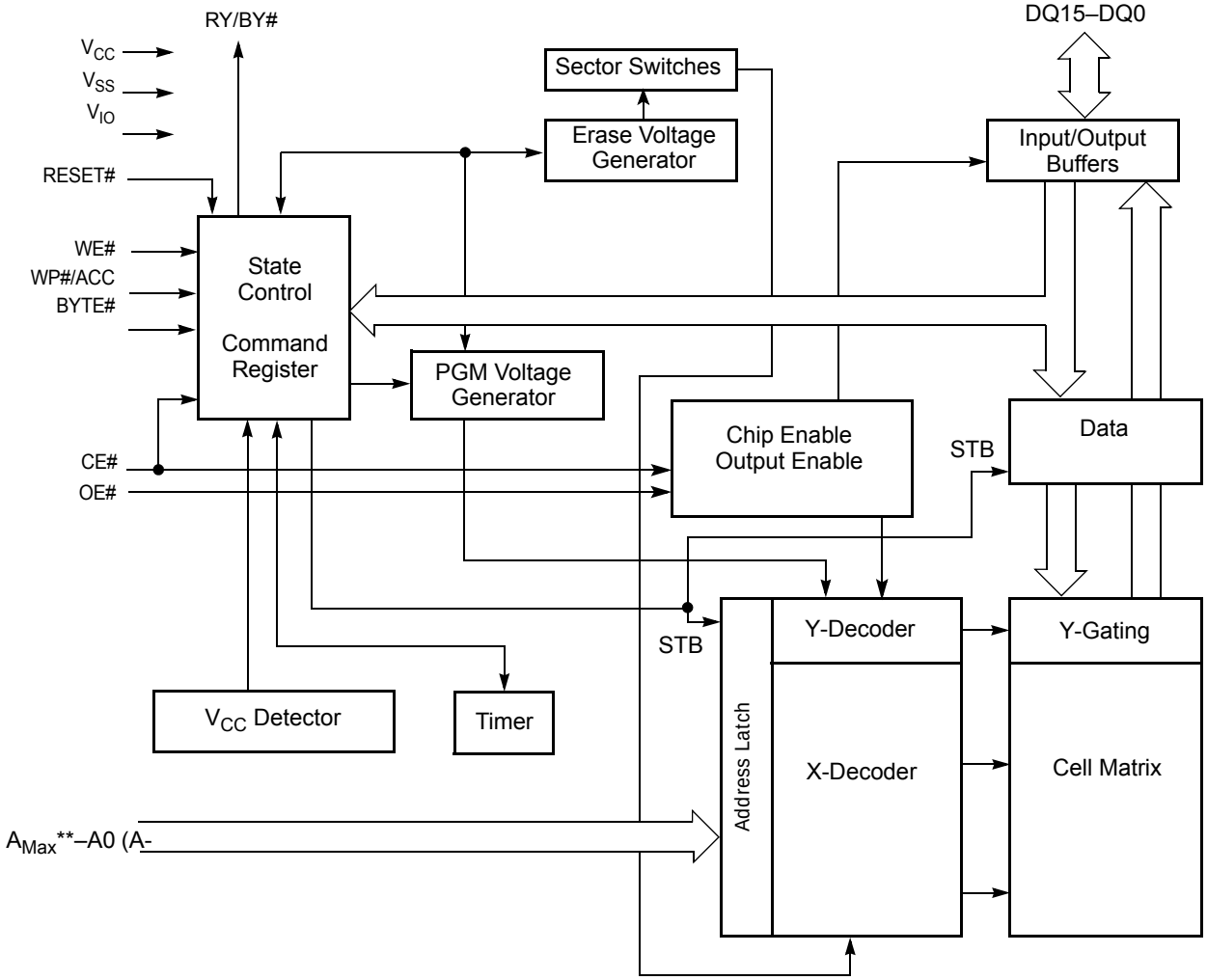

** A_{Max} GL01GP=A25, A_{Max} GL512P = A24, A_{Max} GL256P = A23, A_{Max} GL128P = A22

4. Physical Dimensions/Connection Diagrams

This section shows the I/O designations and package specifications for the S29GL-P family.

4.1 Related Documents

The following documents contain information relating to the S29GL-P devices. Click on the title or go to www.cypress.com download the PDF file, or request a copy from your sales office.

- Considerations for X-ray Inspection of Surface-Mounted Flash Integrated Circuits

4.2 Special Handling Instructions for BGA Package

Special handling is required for Flash Memory products in BGA packages.

Flash memory devices in BGA packages may be damaged if exposed to ultrasonic cleaning methods. The package and/or data integrity may be compromised if the package body is exposed to temperatures above 150°C for prolonged periods of time.

Figure 4.1 64-ball Fortified Ball Grid Array

Top View, Balls Facing Down

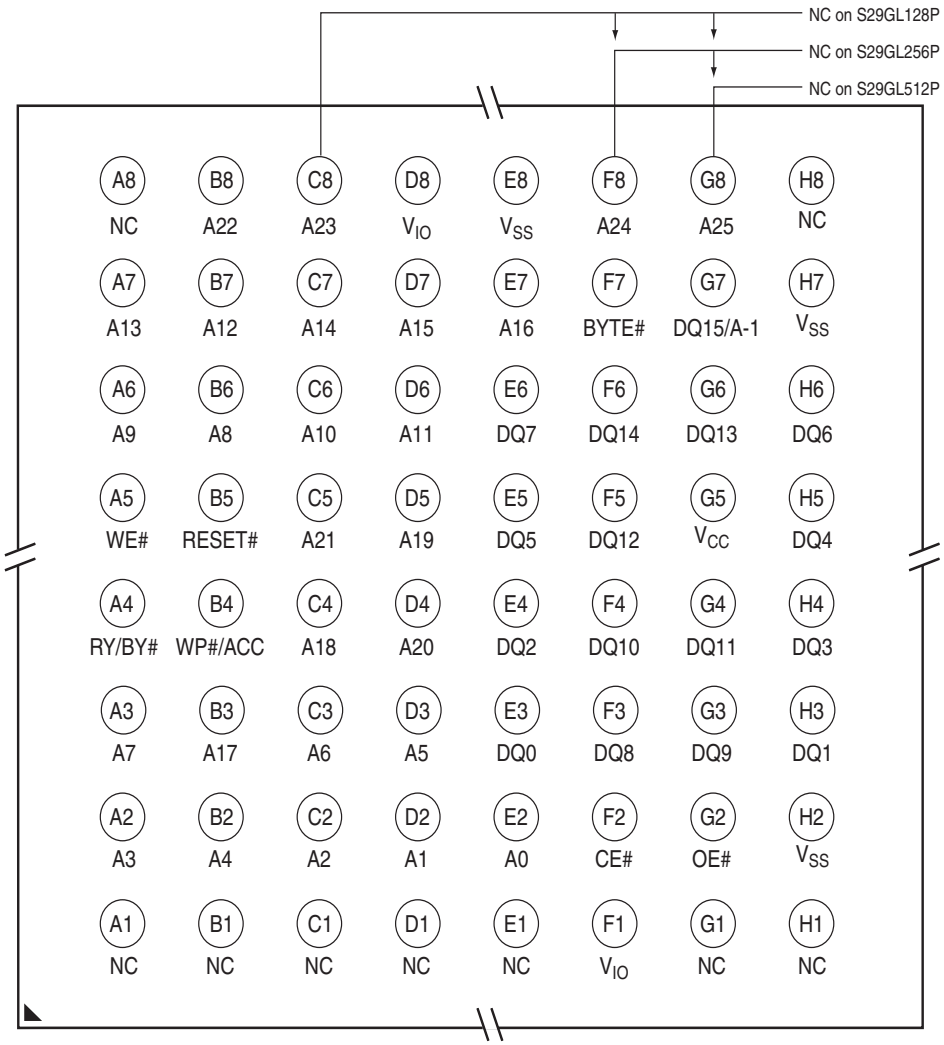

4.3 LAA064—64 ball Fortified Ball Grid Array, 11 x 13 mm

Figure 4.2 LAA064—64ball Fortified Ball Grid Array (FBGA), 11 x 13 mm

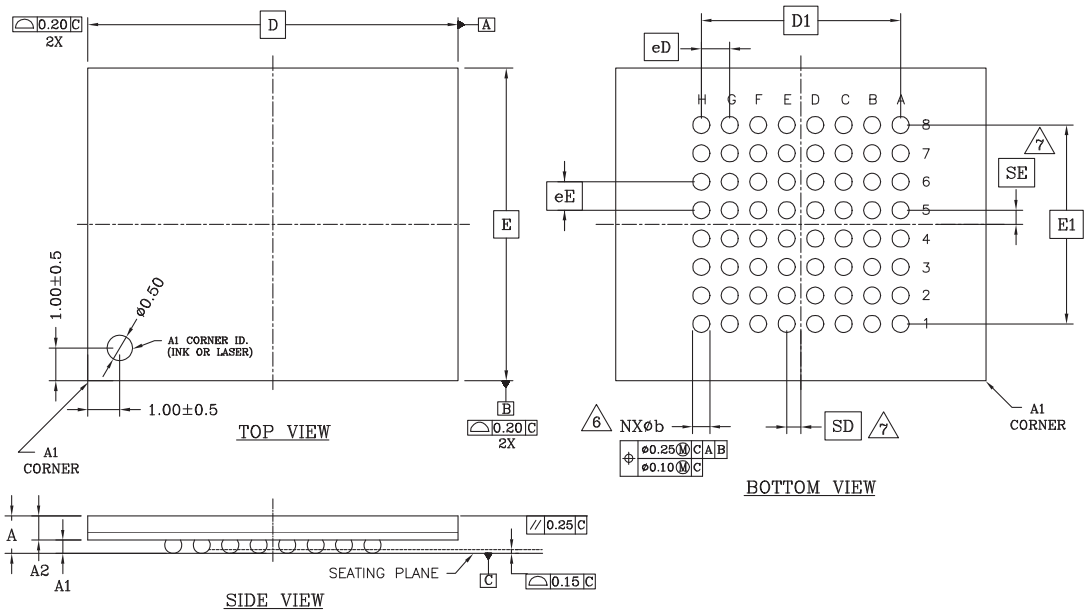

PACKAGE	LAA 064			
JEDEC	N/A			
	13.00 mm x 11.00 mm PACKAGE			
SYMBOL	MIN	NOM	MAX	NOTE
A	---	---	1.40	PROFILE HEIGHT
A1	0.40	---	---	STANDOFF
A2	0.60	---	---	BODY THICKNESS
D	13.00 BSC.			BODY SIZE
E	11.00 BSC.			BODY SIZE
D1	7.00 BSC.			MATRIX FOOTPRINT
E1	7.00 BSC.			MATRIX FOOTPRINT
MD	8			MATRIX SIZE D DIRECTION
ME	8			MATRIX SIZE E DIRECTION
N	64			BALL COUNT
ϕb	0.50	0.60	0.70	BALL DIAMETER
eD	1.00 BSC.			BALL PITCH - D DIRECTION
eE	1.00 BSC.			BALL PITCH - E DIRECTION
SD / SE	0.50 BSC.			SOLDER BALL PLACEMENT
	NONE			DEPOPULATED SOLDER BALLS

NOTES:

1. DIMENSIONING AND TOLERANCING PER ASME Y14.5M-1994.
2. ALL DIMENSIONS ARE IN MILLIMETERS.
3. BALL POSITION DESIGNATION PER JESD 95-1, SPP-010 (EXCEPT AS NOTED).
4. e REPRESENTS THE SOLDER BALL GRID PITCH.
5. SYMBOL "MD" IS THE BALL ROW MATRIX SIZE IN THE "D" DIRECTION.

   SYMBOL "ME" IS THE BALL COLUMN MATRIX SIZE IN THE "E" DIRECTION.

   N IS THE TOTAL NUMBER OF SOLDER BALLS.
6. DIMENSION "b" IS MEASURED AT THE MAXIMUM BALL DIAMETER IN A PLANE PARALLEL TO DATUM C.
7. SD AND SE ARE MEASURED WITH RESPECT TO DATUMS A AND B AND DEFINE THE POSITION OF THE CENTER SOLDER BALL IN THE OUTER ROW.

   WHEN THERE IS AN ODD NUMBER OF SOLDER BALLS IN THE OUTER ROW PARALLEL TO THE D OR E DIMENSION, RESPECTIVELY, SD OR SE = 0.000.

   WHEN THERE IS AN EVEN NUMBER OF SOLDER BALLS IN THE OUTER ROW, SD OR SE = e/2
8. NOT USED.
9. "+" INDICATES THE THEORETICAL CENTER OF DEPOPULATED BALLS.

3354 \ 16-038.12d

Figure 4.3 56-pin Standard TSOP (Top View)

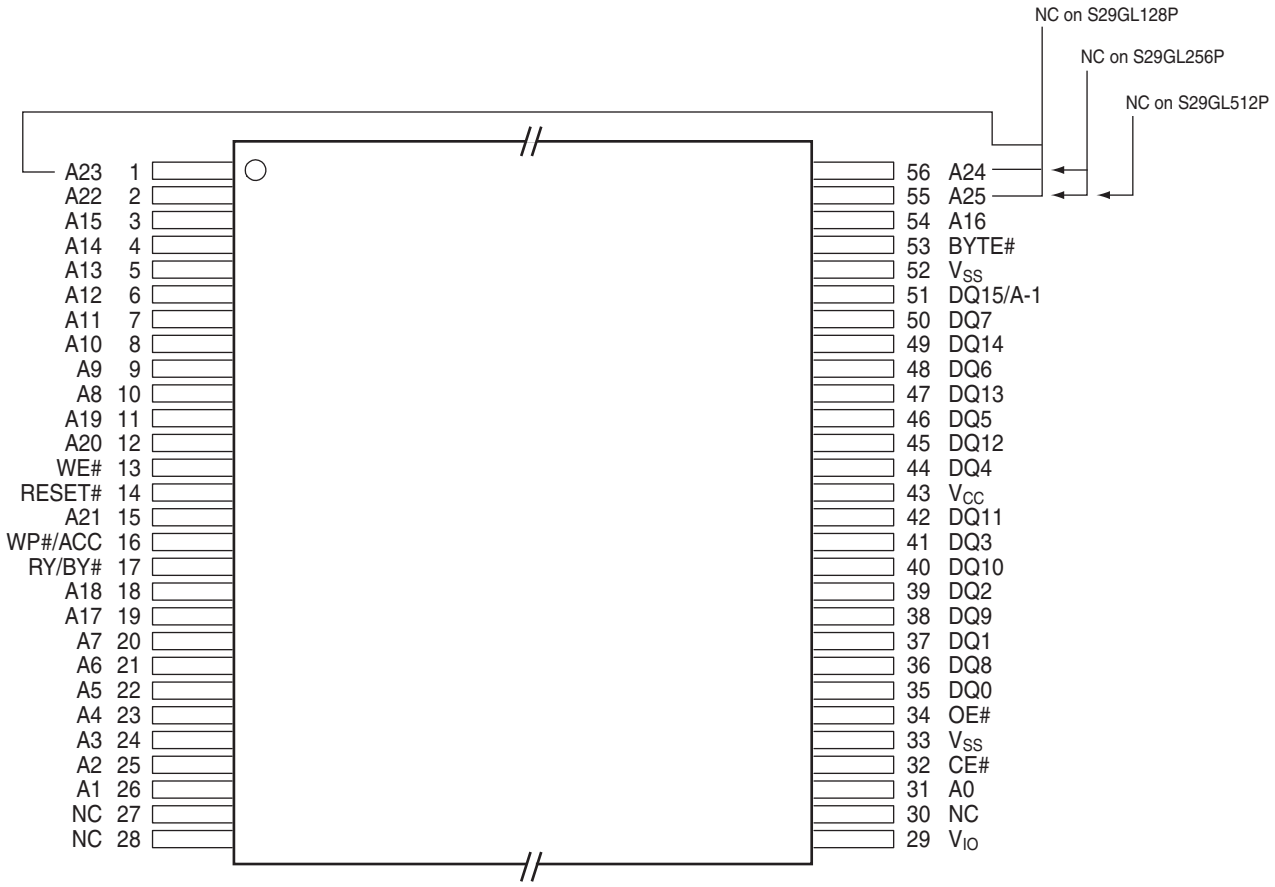

4.4 TS056—56-Pin Standard Thin Small Outline Package (TSOP)

Figure 4.4 56-Pin Thin Small Outline Package (TSOP), 14 x 20 mm

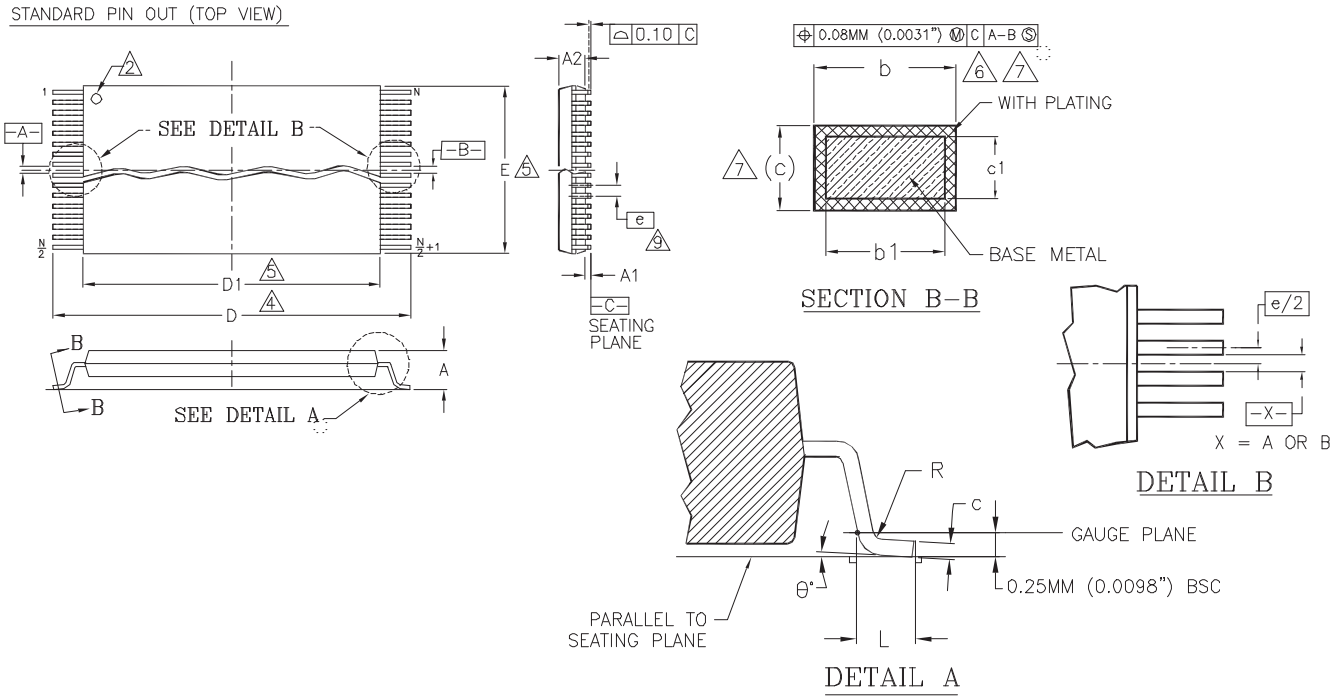

PACKAGE	TS 56		
JEDEC	MO-142 (B) EC		
SYMBOL	MIN.	NOM.	MAX.
A	---	---	1.20
A1	0.05	---	0.15
A2	0.95	1.00	1.05
b1	0.17	0.20	0.23
b	0.17	0.22	0.27
c1	0.10	---	0.16
c	0.10	---	0.21
D	19.80	20.00	20.20
D1	18.30	18.40	18.50
E	13.90	14.00	14.10
e	0.50 BASIC		
L	0.50	0.60	0.70
Ø	0°	-	8°
R	0.08	---	0.20
N	56		

NOTES:

1. CONTROLLING DIMENSIONS ARE IN MILLIMETERS (mm). (DIMENSIONING AND TOLERANCING CONFORMS TO ANSI Y14.5M-1982.)
2. PIN 1 IDENTIFIER FOR STANDARD PIN OUT (DIE UP).
3. TO BE DETERMINED AT THE SEATING PLANE -C- . THE SEATING PLANE IS DEFINED AS THE PLANE OF CONTACT THAT IS MADE WHEN THE PACKAGE LEADS ARE ALLOWED TO REST FREELY ON A FLAT HORIZONTAL SURFACE.
4. DIMENSIONS D1 AND E DO NOT INCLUDE MOLD PROTRUSION. ALLOWABLE MOLD PROTUSION IS 0.15 mm PER SIDE.
5. DIMENSION b DOES NOT INCLUDE DAMBAR PROTUSION. ALLOWABLE DAMBAR PROTUSION SHALL BE 0.08 mm TOTAL IN EXCESS OF b DIMENSION AT MAX MATERIAL CONDITION. MINIMUM SPACE BETWEEN PROTRUSION AND AN ADJACENT LEAD TO BE 0.07 mm.
6. THESE DIMESIONS APPLY TO THE FLAT SECTION OF THE LEAD BETWEEN 0.10 mm AND 0.25 mm FROM THE LEAD TIP.
7. LEAD COPLANARITY SHALL BE WITHIN 0.10 mm AS MEASURED FROM THE SEATING PLANE.
8. DIMENSION "e" IS MEASURED AT THE CENTERLINE OF THE LEADS.

3160\38.10A

5. Additional Resources

Visit www.cypress.com to obtain the following related documents:

5.1 Application Notes

The following is a list of application notes related to this product. All Cypress application notes are available at http://www.cypress.com/Support/TechnicalDocuments/Pages/ApplicationNotes.aspx

- Using the Operation Status Bits in AMD Devices
- Understanding Page Mode Flash Memory Devices
- MirrorBit® Flash Memory Write Buffer Programming and Page Buffer Read
- Common Flash Interface Version 1.4 Vendor Specific Extensions
- MirrorBit® Flash Memory Write Buffer Programming and Page Buffer Read
- Taking Advantage of Page Mode Read on the MCF5407 Coldfire
- Migration to S29GL128N and S29GL256N based on 110nm MirrorBit® Technology
- Optimizing Program/Erase Times
- Practical Guide to Endurance and Data Retention
- Configuring FPGAs using Cypress S29GL-N Flash
- Connecting Cypress™ Flash Memory to a System Address Bus
- Connecting Unused Data Lines of MirrorBit® Flash
- Reset Voltage and Timing Requirements for MirrorBit® Flash
- Versatile IO: DQ and Enhanced

5.2 Specification Bulletins

Contact your local sales office for details.

5.3 Hardware and Software Support

Downloads and related information on Flash device support is available at http://www.cypress.com/Support/Pages/DriversSoftware.aspx

- Cypress low-level drivers
- Enhanced Flash drivers
- Flash file system

Downloads and related information on simulation modeling and CAD modeling support is available at http://www.cypress.com/Support/Pages/SimulationModels.aspx

- VHDL and Verilog
- IBIS
- ORCAD

5.4 Contacting Cypress

Obtain the latest list of company locations and contact information on our web site at http://www.cypress.com/About/Pages/Locations.aspx

6. Product Overview

The S29GL-P family consists of 1 Gb, 512 Mb, 256 Mb and 128 Mb, 3.0-volt-only, page mode Flash devices optimized for today's embedded designs that demand a large storage array and rich functionality. These devices are manufactured using 90 nm MirrorBit technology. These products offer uniform 64 Kword (128 Kbyte) uniform sectors and feature VersatileIO control, allowing control and I/O signals to operate from 1.65 V to V_{CC}. Additional features include:

- Single word programming or a 32-word programming buffer for an increased programming speed
- Program Suspend/Resume and Erase Suspend/Resume
- Advanced Sector Protection methods for protecting sectors as required
- 128 words/256 bytes of Secured Silicon area for storing customer and factory secured information. The Secured Silicon Sector is One Time Programmable.

6.1 Memory Map

The S29GL-P devices consist of uniform 64 Kword (128 Kbyte) sectors organized as shown in Table –Table .

S29GL01GP Sector & Memory Address Map

Uniform Sector Size	Sector Count	Sector Range	Address Range (16-bit)	Notes
64 Kword/128 Kbyte	1024	SA00	0000000h - 000FFFFh	Sector Starting Address
		:	:	
		SA1023	3FF0000H - 3FFFFFFh	Sector Ending Address

Note
This table has been condensed to show sector-related information for an entire device on a single page. Sectors and their address ranges that are not explicitly listed (such as SA001-SA1022) have sector starting and ending addresses that form the same pattern as all other sectors of that size. For example, all 128 Kb sectors have the pattern xxx0000h-xxxFFFFh.

S29GL512P Sector & Memory Address Map

Uniform Sector Size	Sector Count	Sector Range	Address Range (16-bit)	Notes
64 Kword/128 Kbyte	512	SA00	0000000h - 000FFFFh	Sector Starting Address
		:	:	
		SA511	1FF0000H - 1FFFFFFh	Sector Ending Address

Note
This table has been condensed to show sector-related information for an entire device on a single page. Sectors and their address ranges that are not explicitly listed (such as SA001-SA510) have sector starting and ending addresses that the same pattern as all other sectors of that size. For example, all 128 Kb sectors have the pattern xxx0000h-xxxFFFFh.

S29GL256P Sector & Memory Address Map

Uniform Sector Size	Sector Count	Sector Range	Address Range (16-bit)	Notes
64 Kword/ 128 Kbyte	256	SA00	0000000h - 000FFFFh	Sector Starting Address
		:	:	
		SA255	0FF0000H - 0FFFFFFh	Sector Ending Address

Note
This table has been condensed to show sector-related information for an entire device on a single page. Sectors and their address ranges that are not explicitly listed (such as SA001-SA254) have sector starting and ending addresses that form the same pattern as all other sectors of that size. For example, all 128 Kb sectors have the pattern xxx0000h-xxxFFFFh.

S29GL128P Sector & Memory Address Map

Uniform Sector Size	Sector Count	Sector Range	Address Range (16-bit)	Notes
64 Kword/ 128 Kbyte	128	SA00	0000000h - 000FFFFh	Sector Starting Address
		:	:	
		SA127	07F0000 - 7FFFFF	Sector Ending Address

Note
This table has been condensed to show sector-related information for an entire device on a single page. Sectors and their address ranges that are not explicitly listed (such as SA001-SA510) have sector starting and ending addresses that form the same pattern as all other sectors of that size. For example, all 128 Kb sectors have the pattern xxx0000h-xxxFFFFh.

7. Device Operations

This section describes the read, program, erase, handshaking, and reset features of the Flash devices.

Operations are initiated by writing specific commands or a sequence with specific address and data patterns into the command registers (see Table through Table). The command register itself does not occupy any addressable memory location; rather, it is composed of latches that store the commands, along with the address and data information needed to execute the command. The contents of the register serve as input to the internal state machine and the state machine outputs dictate the function of the device. Writing incorrect address and data values or writing them in an improper sequence may place the device in an unknown state, in which case the system must pull the RESET# pin low or power cycle the device to return the device to the reading array data mode.

7.1 Device Operation Table

The device must be setup appropriately for each operation. Table describes the required state of each control pin for any particular operation.

Device Operations

Operation	CE#	OE#	WE#	RESET#	WP#/ACC	Addresses (Note 1)	DQ0–DQ7	DQ8–DQ15	
								BYTE#= V_{IH}	BYTE#= V_{IL}
Read	L	L	H	H	X	A_{IN}	D_{OUT}	D_{OUT}	DQ8–DQ14 = High-Z, DQ15 = A-1
Write (Program/ Erase)	L	H	L	H	(Note 2)	A_{IN}	(Note 3)	(Note 3)	
Accelerated Program	L	H	L	H	V_{HH}	A_{IN}	(Note 3)	(Note 3)	
Standby	$V_{CC} \pm 0.3$ V	X	X	$V_{CC} \pm 0.3$ V	H	X	High-Z	High-Z	High-Z
Output Disable	L	H	H	H	X	X	High-Z	High-Z	High-Z
Reset	X	X	X	L	X	X	High-Z	High-Z	High-Z

Legend

L = Logic Low = V_{IL}, H = Logic High = V_{IH}, V_{HH} = 11.5–12.5V, X = Don't Care, A_{IN} = Address In, D_{IN} = Data In, D_{OUT} = Data Out

Notes

1. *Addresses are AMax:A0 in word mode; A_{Max}:A-1 in byte mode.*
2. *If WP# = V_{IL}, on the outermost sector remains protected. If WP# = V_{IH}, the outermost sector is unprotected. WP# has an internal pull-up; when unconnected, WP# is at V_{IH}. All sectors are unprotected when shipped from the factory (The Secured Silicon Sector can be factory protected depending on version ordered.)*
3. *D_{IN} or D_{OUT} as required by command sequence, data polling, or sector protect algorithm.*

7.2 Word/Byte Configuration

The BYTE# pin controls whether the device data I/O pins operate in the byte or word configuration. If the BYTE# pin is set at logic '1', the device is in word configuration, DQ0-DQ15 are active and controlled by CE# and OE#.

If the BYTE# pin is set at logic '0', the device is in byte configuration, and only data I/O pins DQ0-DQ7 are active and controlled by CE# and OE#. The data I/O pins DQ8-DQ14 are tri-stated, and the DQ15 pin is used as an input for the LSB (A-1) address function.

7.3 Versatile IO™ (V_{IO}) Control

The VersatileIO™ (V_{IO}) control allows the host system to set the voltage levels that the device generates and tolerates on all inputs and outputs (address, control, and DQ signals). V_{IO} range is 1.65 to V_{CC}. See *Ordering Information* on page 4 for V_{IO} options on this device.

For example, a V_{IO} of 1.65-3.6 volts allows for I/O at the 1.8 or 3 volt levels, driving and receiving signals to and from other 1.8 or 3 V devices on the same data bus.

7.4 Read

All memories require access time to output array data. In a read operation, data is read from one memory location at a time. Addresses are presented to the device in random order, and the propagation delay through the device causes the data on its outputs to arrive with the address on its inputs.

The device defaults to reading array data after device power-up or hardware reset. To read data from the memory array, the system must first assert a valid address on Amax-A0, while driving OE# and CE# to V_{IL}. WE# must remain at V_{IH}. All addresses are latched on the falling edge of CE#. Data will appear on DQ15-DQ0 after address access time (t_{ACC}), which is equal to the delay from stable addresses to valid output data. The OE# signal must be driven to V_{IL}. Data is output on DQ15-DQ0 pins after the access time (t_{OE}) has elapsed from the falling edge of OE#, assuming the t_{ACC} access time has been meet.

7.5 Page Read Mode

The device is capable of fast page mode read and is compatible with the page mode Mask ROM read operation. This mode provides faster read access speed for random locations within a page. The page size of the device is 8 words/16 bytes. The appropriate page is selected by the higher address bits A(max)-A3. Address bits A2-A0 in word mode (A2 to A-1 in byte mode) determine the specific word within a page. The microprocessor supplies the specific word location.

The random or initial page access is equal to t_{ACC} or t_{CE} and subsequent page read accesses (as long as the locations specified by the microprocessor falls within that page) is equivalent to t_{PACC}. When CE# is de-asserted and reasserted for a subsequent access, the access time is t_{ACC} or t_{CE}. Fast page mode accesses are obtained by keeping the "read-page addresses" constant and changing the "intra-read page" addresses.

7.6 Autoselect

The Autoselect mode provides manufacturer ID, Device identification, and sector protection information, through identifier codes output from the internal register (separate from the memory array) on DQ7-DQ0. This mode is primarily intended for programming equipment to automatically match a device to be programmed with its corresponding programming algorithm (see Table). The Autoselect codes can also be accessed in-system.

There are two methods to access autoselect codes. One uses the autoselect command, the other applies V_{ID} on address pin A9.

When using programming equipment, the autoselect mode requires V_{ID} (11.5 V to 12.5 V) on address pin A9. Address pins must be as shown in Table .

- To access Autoselect mode without using high voltage on A9, the host system must issue the Autoselect command.
- The Autoselect command sequence may be written to an address within a sector that is either in the read or erase-suspend-read mode.
- The Autoselect command may not be written while the device is actively programming or erasing.
- The system must write the reset command to return to the read mode (or erase-suspend-read mode if the sector was previously in Erase Suspend).
- It is recommended that A9 apply V_{ID} after power-up sequence is completed. In addition, it is recommended that A9 apply from V_{ID} to V_{IH}/V_{IL} before power-down the V_{CC}/V_{IO}.
- See Table on page 65 for command sequence details.
- When verifying sector protection, the sector address must appear on the appropriate highest order address bits (see Table to Table). The remaining address bits are don't care. When all necessary bits have been set as required, the programming equipment may then read the corresponding identifier code on DQ15-DQ0. The Autoselect codes can also be accessed in-system through the command register.

Autoselect Codes, (High Voltage Method)

Description		CE#	OE#	WE#	Amax to A16	A14 to A10	A9	A8 to A7	A6	A5 to A4	A3 to A2	A1	A0	DQ8 to DQ15 BYTE #= V_{IH}	DQ8 to DQ15 BYTE # = V_{IL}	DQ7 to DQ0
Manufacturer ID: Cypress Product		L	L	H	X	X	V_{ID}	X	L	X	L	L	L	00	X	01h
Device ID S29GL01GP	Cycle 1	L	L	H	X	X	V_{ID}	X	L	X	L	L	H	22	X	7Eh
	Cycle 2										H	H	L	22	X	28h
	Cycle 3										H	H	H	22	X	01h
Device ID S29GL512P	Cycle 1	L	L	H	X	X	V_{ID}	X	L	X	L	L	H	22	X	7Eh
	Cycle 2										H	H	L	22	X	23h
	Cycle 3										H	H	H	22	X	01h
Device ID S29GL256P	Cycle 1	L	L	H	X	X	V_{ID}	X	L	X	L	L	H	22	X	7Eh
	Cycle 2										H	H	L	22	X	22h
	Cycle 3										H	H	H	22	X	01h
Device ID S29GL128P	Cycle 1	L	L	H	X	X	V_{ID}	X	L	X	L	L	H	22	X	7Eh
	Cycle 2										H	H	L	22	X	21h
	Cycle 3										H	H	H	22	X	01h
Sector Group Protection Verification		L	L	H	SA	X	V_{ID}	X	L	X	L	H	L	X	X	01h (protected), 00h (unprotected)
Secured Silicon Sector Indicator Bit (DQ7), WP# protects highest address sector		L	L	H	X	X	V_{ID}	X	L	X	L	H	H	X	X	99h (factory locked), 19h (not factory locked)
Secured Silicon Sector Indicator Bit (DQ7), WP# protects lowest address sector		L	L	H	X	X	V_{ID}	X	L	X	L	H	H	X	X	89h (factory locked), 09h (not factory locked)

Legend
L = Logic Low = V_{IL}, H = Logic High = V_{IH}, SA = Sector Address, X = Don't care. V_{ID} = 11.5V to 12.5V

Autoselect Addresses in System

Description	Address	Read Data (word/byte mode)
Manufacturer ID	Base + 00h	xx01h/1h
Device ID, Word 1	Base + 01h	227Eh/7Eh
Device ID, Word 2	Base + 0Eh	2228h/28h (GL01GP) 2223h/23h (GL512P) 2222h/22h (GL256P) 2221h/21h (GL128P)

Autoselect Addresses in System

Description	Address	Read Data (word/byte mode)
Device ID, Word 3	Base + 0Fh	2201h/01h
Secure Device Verify	Base + 03h	For S29GLxxxPH: XX19h/19h = Not Factory Locked. XX99h/99h = Factory Locked. For S29GLxxxPL: XX09h/09h = Not Factory Locked. XX89h/89h = Factory Locked.
Sector Protect Verify	(SA) + 02h	xx01h/01h = Locked, xx00h/00h = Unlocked

Software Functions and Sample Code

Autoselect Entry in System

(LLD Function = lld_AutoselectEntryCmd)

Cycle	Operation	Byte Address	Word Address	Data
Unlock Cycle 1	Write	Base + AAAh	Base + 555h	0x00AAh
Unlock Cycle 2	Write	Base + 555h	Base + 2AAh	0x0055h
Autoselect Command	Write	Base + AAAh	Base + 555h	0x0090h

Autoselect Exit

(LLD Function = lld_AutoselectExitCmd)

Cycle	Operation	Byte Address	Word Address	Data
Autoselect Exit Command	Write	base + XXXh	base + XXXh	0x00F0h

Note

1. *Any offset within the device works.*
2. *base = base address.*

The following is a C source code example of using the autoselect function to read the manufacturer ID. Refer to the *Cypress Low Level Driver User's Guide* (available on www.cypress.com) for general information on Cypress Flash memory software development guidelines.

```
/* Here is an example of Autoselect mode (getting manufacturer ID) */
/* Define UINT16 example: typedef unsigned short UINT16; */

UINT16 manuf_id;

/* Auto Select Entry */

*( (UINT16 *)base_addr + 0x555 ) = 0x00AA; /* write unlock cycle 1 */
*( (UINT16 *)base_addr + 0x2AA ) = 0x0055; /* write unlock cycle 2 */
*( (UINT16 *)base_addr + 0x555 ) = 0x0090; /* write autoselect command */


/* multiple reads can be performed after entry */

manuf_id = *( (UINT16 *)base_addr + 0x000 ); /* read manuf. id */

/*  Autoselect exit */

*( (UINT16 *)base_addr + 0x000 ) = 0x00F0; /* exit autoselect (write reset command) */
```

7.7 Program/Erase Operations

These devices are capable of several modes of programming and or erase operations which are described in detail in the following sections.

During a write operation, the system must drive CE# and WE# to V_{IL} and OE# to V_{IH} when providing address, command, and data. Addresses are latched on the last falling edge of WE# or CE#, while data is latched on the 1st rising edge of WE# or CE#.

The Unlock Bypass feature allows the host system to send program commands to the Flash device without first writing unlock cycles within the command sequence. See Section 7.7.8 for details on the Unlock Bypass function.

Note the following:

- When the Embedded Program algorithm is complete, the device returns to the read mode.
- The system can determine the status of the program operation by reading the DQ status bits. Refer to the *Write Operation Status* on page 32 for information on these status bits.
- An “0” cannot be programmed back to a “1.” A succeeding read shows that the data is still “0.”
- Only erase operations can convert a “0” to a “1.”
- Any commands written to the device during the Embedded Program/Erase are ignored except the Suspend commands.
- Secured Silicon Sector, Autoselect, and CFI functions are unavailable when a program operation is in progress.
- A hardware reset and/or power removal immediately terminates the Program/Erase operation and the Program/Erase command sequence should be reinitiated once the device has returned to the read mode to ensure data integrity.
- Programming is allowed in any sequence and across sector boundaries for single word programming operation. See *Write Buffer Programming* on page 23 when using the write buffer.
- Programming to the same word address multiple times without intervening erases is permitted.

7.7.1 Single Word Programming

Single word programming mode is one method of programming the Flash. In this mode, four Flash command write cycles are used to program an individual Flash address. The data for this programming operation could be 8 or 16-bits wide.

While the single word programming method is supported by most Cypress devices, in general Single Word Programming is not recommended for devices that support Write Buffer Programming. See Table on page 65 for the required bus cycles and Figure 7.1 for the flowchart.

When the Embedded Program algorithm is complete, the device then returns to the read mode and addresses are no longer latched. The system can determine the status of the program operation by reading the DQ status bits. Refer to *Write Operation Status* on page 32 for information on these status bits.

- During programming, any command (except the Suspend Program command) is ignored.
- The Secured Silicon Sector, Autoselect, and CFI functions are unavailable when a program operation is in progress.
- A hardware reset immediately terminates the program operation. The program command sequence should be reinitiated once the device has returned to the read mode, to ensure data integrity.
- Programming to the same address multiple times continuously (for example, “walking” a bit within a word) is permitted.

Figure 7.1 Single Word Program

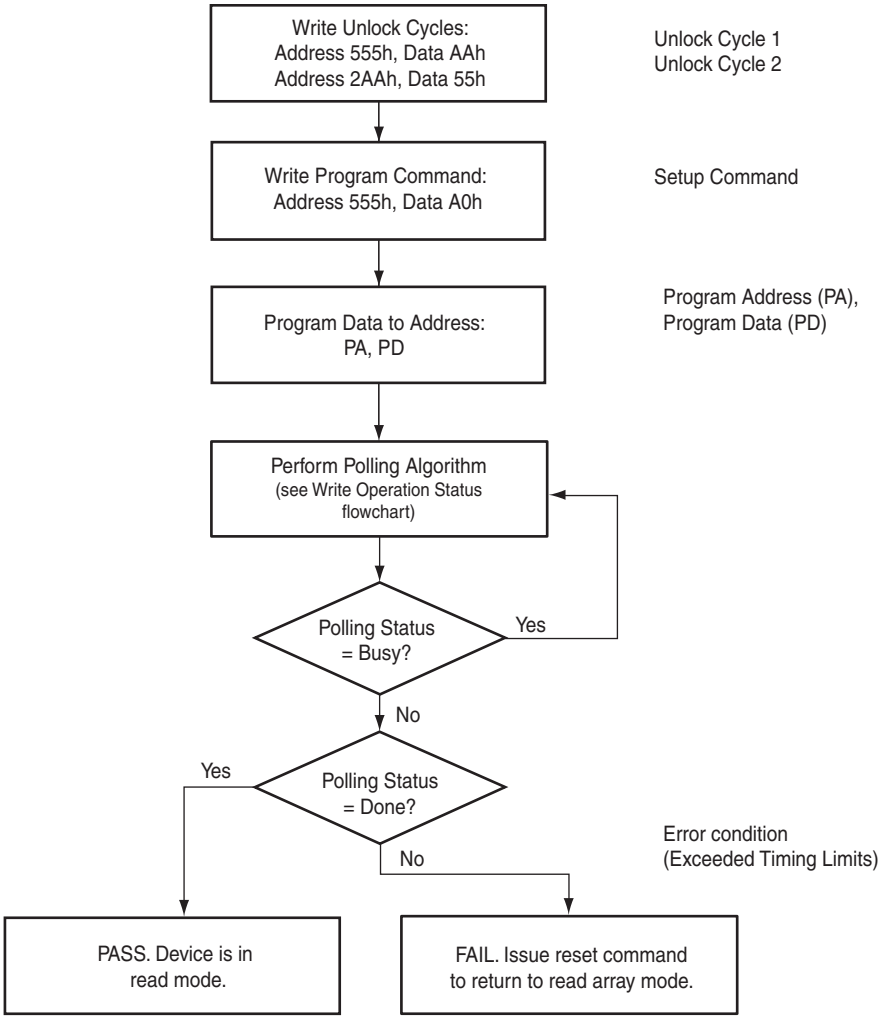

Software Functions and Sample Code

Single Word/Byte Program

(LLD Function = lld_ProgramCmd)

Cycle	Operation	Byte Address	Word Address	Data
Unlock Cycle 1	Write	Base + AAAh	Base + 555h	00AAh
Unlock Cycle 2	Write	Base + 555h	Base + 2AAh	0055h
Program Setup	Write	Base + AAAh	Base + 555h	00A0h
Program	Write	Byte Address	Word Address	Data

Note
Base = Base Address.

The following is a C source code example of using the single word program function. Refer to the *Cypress Low Level Driver User's Guide* (available on www.cypress.com) for general information on Cypress Flash memory software development guidelines.

```
/* Example: Program Command    */
  *( (UINT16 *)base_addr + 0x555 ) = 0x00AA;   /* write unlock cycle 1            */
  *( (UINT16 *)base_addr + 0x2AA ) = 0x0055;   /* write unlock cycle 2            */
  *( (UINT16 *)base_addr + 0x555 ) = 0x00A0;   /* write program setup command     */
  *( (UINT16 *)pa )                = data;     /* write data to be programmed     */
/* Poll for program completion */
```

7.7.2 Write Buffer Programming

Write Buffer Programming allows the system to write a maximum of 32 words in one programming operation. This results in a faster effective word programming time than the standard "word" programming algorithms. The Write Buffer Programming command sequence is initiated by first writing two unlock cycles. This is followed by a third write cycle containing the Write Buffer Load command written at the Sector Address in which programming occurs. At this point, the system writes the number of "word locations minus 1" that are loaded into the page buffer at the Sector Address in which programming occurs. This tells the device how many write buffer addresses are loaded with data and therefore when to expect the "Program Buffer to Flash" confirm command. The number of locations to program cannot exceed the size of the write buffer or the operation aborts. (Number loaded = the number of locations to program minus 1. For example, if the system programs 6 address locations, then 05h should be written to the device.)

The system then writes the starting address/data combination. This starting address is the first address/data pair to be programmed, and selects the "write-buffer-page" address. All subsequent address/data pairs must fall within the elected write-buffer-page.

The "write-buffer-page" is selected by using the addresses A_{MAX}–A5.

The "write-buffer-page" addresses must be the same for all address/data pairs loaded into the write buffer. (This means Write Buffer Programming cannot be performed across multiple "write-buffer-pages." This also means that Write Buffer Programming cannot be performed across multiple sectors. If the system attempts to load programming data outside of the selected "write-buffer-page", the operation ABORTs.)

After writing the Starting Address/Data pair, the system then writes the remaining address/data pairs into the write buffer.

Note that if a Write Buffer address location is loaded multiple times, the "address/data pair" counter is decremented for every data load operation. Also, the last data loaded at a location before the "Program Buffer to Flash" confirm command is the data programmed into the device. It is the software's responsibility to comprehend ramifications of loading a write-buffer location more than once. The counter decrements for each data load operation, NOT for each unique write-buffer-address location. Once the specified number of write buffer locations have been loaded, the system must then write the "Program Buffer to Flash" command at the Sector Address. Any other address/data write combinations abort the Write Buffer Programming operation. The Write Operation Status bits should be used while monitoring the last address location loaded into the write buffer. This eliminates the need to store an address in memory because the system can load the last address location, issue the program confirm command at the last loaded address location, and then check the write operation status at that same address. DQ7, DQ6, DQ5, DQ2, and DQ1 should be monitored to determine the device status during Write Buffer Programming.

The write-buffer "embedded" programming operation can be suspended using the standard suspend/resume commands. Upon successful completion of the Write Buffer Programming operation, the device returns to READ mode.

The Write Buffer Programming Sequence is ABORTED under any of the following conditions:

- Load a value that is greater than the page buffer size during the "Number of Locations to Program" step.
- Write to an address in a sector different than the one specified during the Write-Buffer-Load command.
- Write an Address/Data pair to a different write-buffer-page than the one selected by the "Starting Address" during the "write buffer data loading" stage of the operation.
- Writing anything other than the *Program to Buffer Flash* Command after the specified number of "data load" cycles.

The ABORT condition is indicated by DQ1 = 1, DQ7 = DATA# (for the "last address location loaded"), DQ6 = TOGGLE, DQ5 = 0. This indicates that the Write Buffer Programming Operation was ABORTED. A "Write-to-Buffer-Abort reset" command sequence is required when using the write buffer Programming features in Unlock Bypass mode. Note that the Secured Silicon sector, autoselect, and CFI functions are unavailable when a program operation is in progress.

Write buffer programming is allowed in any sequence of memory (or address) locations. These flash devices are capable of handling multiple write buffer programming operations on the same write buffer address range without intervening erases.

Use of the write buffer is strongly recommended for programming when multiple words are to be programmed.

Software Functions and Sample Code

Write Buffer Program

(LLD Functions Used = lld_WriteToBufferCmd, lld_ProgramBufferToFlashCmd)

Cycle	Description	Operation	Byte Address	Word Address	Data
1	Unlock	Write	Base + AAAh	Base + 555h	00AAh
2	Unlock	Write	Base + 555h	Base + 2AAh	0055h
3	Write Buffer Load Command	Write	Sector Address		0025h
4	Write Word Count	Write	Sector Address		Word Count (N–1)h
Number of words (N) loaded into the write buffer can be from 1 to 32 words (1 to 64 bytes).					
5 to 36	Load Buffer Word N	Write	Program Address, Word N		Word N
Last	Write Buffer to Flash	Write	Sector Address		0029h

Notes

1. *Base = Base Address.*
2. *Last = Last cycle of write buffer program operation; depending on number of words written, the total number of cycles may be from 6 to 37.*
3. *For maximum efficiency, it is recommended that the write buffer be loaded with the highest number of words (N words) possible.*

The following is a C source code example of using the write buffer program function. Refer to the *Cypress Low Level Driver User's Guide* (available on www.cypress.com) for general information on Cypress Flash memory software development guidelines.

```
/* Example: Write Buffer Programming Command            */
/* NOTES: Write buffer programming limited to 16 words. */
/*        All addresses to be written to the flash in   */
/*        one operation must be within the same flash   */
/*        page. A flash page begins at addresses       */
/*        evenly divisible by 0x20.                     */
  UINT16 *src = source_of_data;                /* address of source data          */
  UINT16 *dst = destination_of_data;          /* flash destination address       */
  UINT16 wc   = words_to_program -1;           /* word count (minus 1)            */
  *( (UINT16 *)base_addr + 0x555 ) = 0x00AA;   /* write unlock cycle 1            */
  *( (UINT16 *)base_addr + 0x2AA ) = 0x0055;   /* write unlock cycle 2            */
  *( (UINT16 *)sector_address )    = 0x0025;   /* write write buffer load command */
  *( (UINT16 *)sector_address )    = wc;       /* write word count (minus 1)      */
for (i=0;i<=wc;i++)
{
*dst++ = *src++; /* ALL dst MUST BE in same Write Buffer */
}
*( (UINT16 *)sector_address )    = 0x0029;   /* write confirm command           */
  /* poll for completion */


/* Example: Write Buffer Abort Reset */
  *( (UINT16 *)addr + 0x555 ) = 0x00AA;   /* write unlock cycle 1            */
  *( (UINT16 *)addr + 0x2AA ) = 0x0055;   /* write unlock cycle 2            */
  *( (UINT16 *)addr + 0x555 ) = 0x00F0;   /* write buffer abort reset        */
```

Figure 7.2 Write Buffer Programming Operation

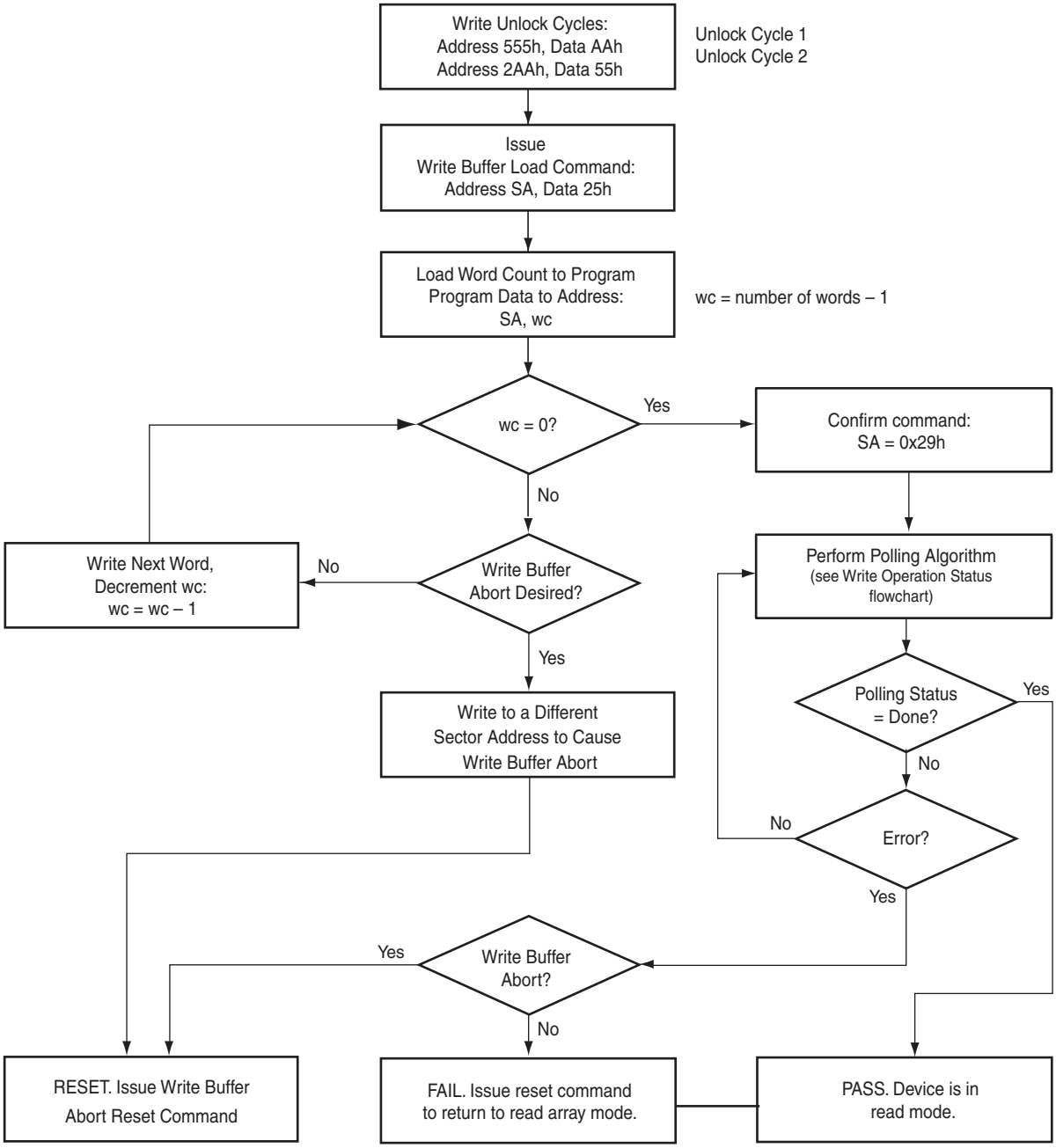

7.7.3 Sector Erase

The sector erase function erases one or more sectors in the memory array. (See Table on page 65 and Figure 7.3.) The device does not require the system to preprogram a sector prior to erase. The Embedded Erase algorithm automatically programs and verifies the entire memory to an all zero data pattern prior to electrical erase. After a successful sector erase, all locations within the erased sector contain FFFFh. The system is not required to provide any controls or timings during these operations.

After the command sequence is written, the sector erase time-out t_{SEA} (50 µs) occurs. During the time-out period, additional sector addresses may be written. Loading the sector erase buffer may be done in any sequence, and the number of sectors may be from one sector to all sectors. The time between these additional cycles must be less than 50 µs. Any sector erase address and command following the exceeded time-out (50 µs) may or may not be accepted. Any command other than Sector Erase or Erase Suspend during the time-out period resets that sector to the read mode. The system can monitor DQ3 to determine if the sector erase timer has timed out (See Section 7.8.6.) The time-out begins from the rising edge of the final WE# pulse in the command sequence.

When the Embedded Erase algorithm is complete, the sector returns to reading array data and addresses are no longer latched. The system can determine the status of the erase operation by reading DQ7 or DQ6/DQ2 in the erasing sector. Refer to Section 7.8 for information on these status bits.

Once the sector erase operation has begun, only the Erase Suspend command is valid. All other commands are ignored. However, note that a hardware reset immediately terminates the erase operation. If that occurs, the sector erase command sequence should be reinitiated once that sector has returned to reading array data, to ensure the sector is properly erased.

The Unlock Bypass feature allows the host system to send program commands to the Flash device without first writing unlock cycles within the command sequence. See Section 7.7.8 for details on the Unlock Bypass function.

Figure 7.3 illustrates the algorithm for the erase operation. Refer to Section 11.7.5 for parameters and timing diagrams.

Software Functions and Sample Code

Sector Erase

(LLD Function = lld_SectorEraseCmd)

Cycle	Description	Operation	Byte Address	Word Address	Data
1	Unlock	Write	Base + AAAh	Base + 555h	00AAh
2	Unlock	Write	Base + 555h	Base + 2AAh	0055h
3	Setup Command	Write	Base + AAAh	Base + 555h	0080h
4	Unlock	Write	Base + AAAh	Base + 555h	00AAh
5	Unlock	Write	Base + 555h	Base + 2AAh	0055h
6	Sector Erase Command	Write	Sector Address	Sector Address	0030h
Unlimited additional sectors may be selected for erase; command(s) must be written within 50 µs.					

The following is a C source code example of using the sector erase function. Refer to the *Cypress Low Level Driver User's Guide* (available on www.cypress.com) for general information on Cypress Flash memory software development guidelines.

```
/* Example: Sector Erase Command */
  *( (UINT16 *)base_addr + 0x555 ) = 0x00AA;   /* write unlock cycle 1            */
  *( (UINT16 *)base_addr + 0x2AA ) = 0x0055;   /* write unlock cycle 2            */
  *( (UINT16 *)base_addr + 0x555 ) = 0x0080;   /* write setup command             */
  *( (UINT16 *)base_addr + 0x555 ) = 0x00AA;   /* write additional unlock cycle 1 */
  *( (UINT16 *)base_addr + 0x2AA ) = 0x0055;   /* write additional unlock cycle 2 */
  *( (UINT16 *)sector_address )    = 0x0030;   /* write sector erase command      */
```

Figure 7.3 Sector Erase Operation

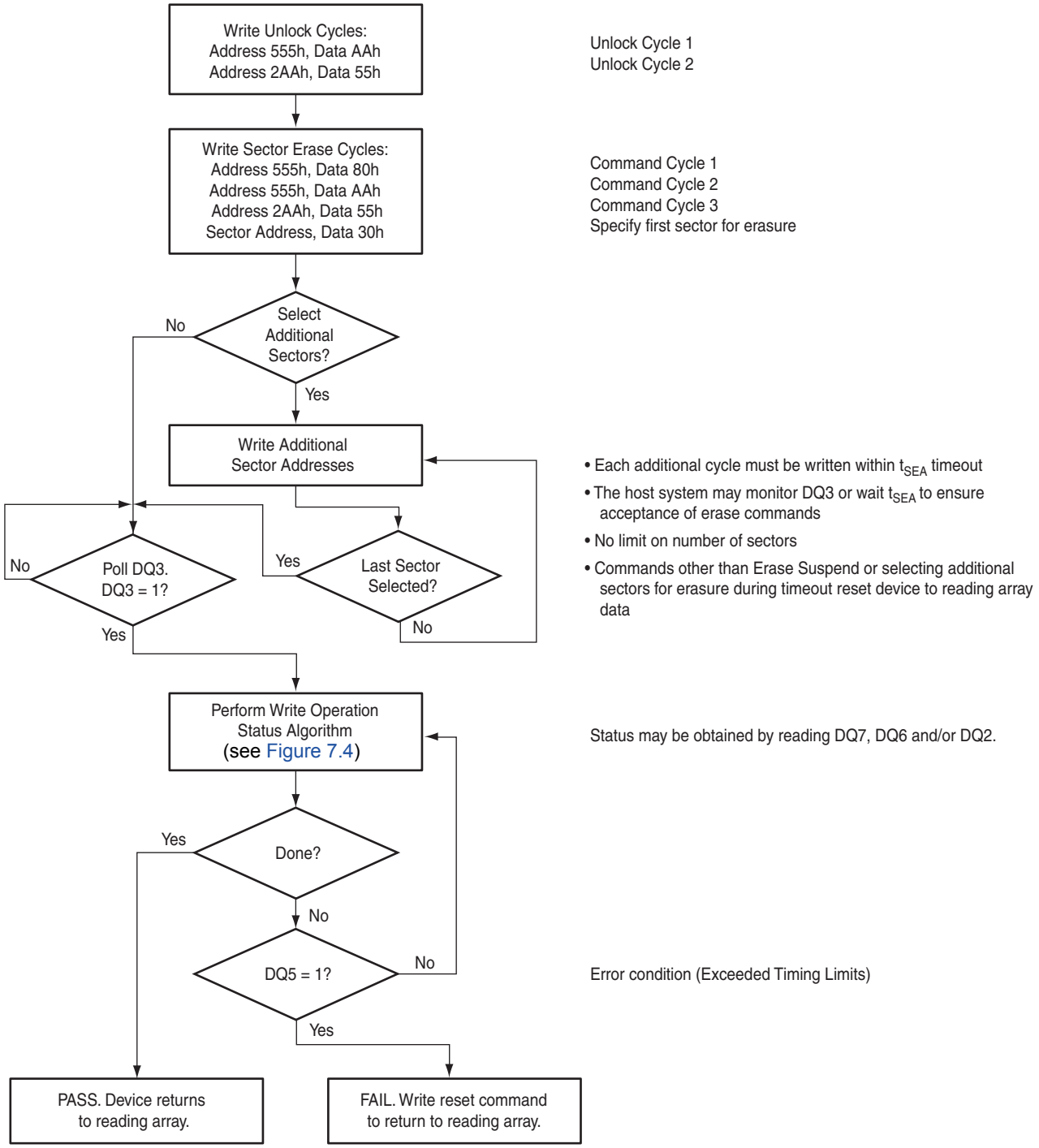

Notes

1. *See Table on page 65 for erase command sequence.*
2. *See DQ3: Sector Erase Timeout State Indicator on page 35 for information on the sector erase timeout.*

7.7.4 Chip Erase Command Sequence

Chip erase is a six-bus cycle operation as indicated by Table on page 65. These commands invoke the Embedded Erase algorithm, which does not require the system to preprogram prior to erase. The Embedded Erase algorithm automatically preprograms and verifies the entire memory to an all zero data pattern prior to electrical erase. After a successful chip erase, all locations of the chip contain FFFFh. The system is not required to provide any controls or timings during these operations. The *Command Definitions* on page 64 shows the address and data requirements for the chip erase command sequence.

When the Embedded Erase algorithm is complete, that sector returns to the read mode and addresses are no longer latched. The system can determine the status of the erase operation by using DQ7 or DQ6/DQ2. Refer to "Write Operation Status" for information on these status bits.

The Unlock Bypass feature allows the host system to send program commands to the Flash device without first writing unlock cycles within the command sequence. See Section 7.7.8 for details on the Unlock Bypass function.

Any commands written during the chip erase operation are ignored. However, note that a hardware reset immediately terminates the erase operation. If that occurs, the chip erase command sequence should be reinitiated once that sector has returned to reading array data, to ensure the entire array is properly erased.

Software Functions and Sample Code

Chip Erase

(LLD Function = lld_ChipEraseCmd)

Cycle	Description	Operation	Byte Address	Word Address	Data
1	Unlock	Write	Base + AAAh	Base + 555h	00AAh
2	Unlock	Write	Base + 555h	Base + 2AAh	0055h
3	Setup Command	Write	Base + AAAh	Base + 555h	0080h
4	Unlock	Write	Base + AAAh	Base + 555h	00AAh
5	Unlock	Write	Base + 555h	Base + 2AAh	0055h
6	Chip Erase Command	Write	Base + AAAh	Base + 555h	0010h

The following is a C source code example of using the chip erase function. Refer to the *Cypress Low Level Driver User's Guide* (available on www.cypress.com) for general information on Cypress Flash memory software development guidelines.

```
/* Example: Chip Erase Command */
/* Note: Cannot be suspended   */
  *( (UINT16 *)base_addr + 0x555 ) = 0x00AA;   /* write unlock cycle 1            */
  *( (UINT16 *)base_addr + 0x2AA ) = 0x0055;   /* write unlock cycle 2            */
  *( (UINT16 *)base_addr + 0x555 ) = 0x0080;   /* write setup command             */
  *( (UINT16 *)base_addr + 0x555 ) = 0x00AA;   /* write additional unlock cycle 1 */
  *( (UINT16 *)base_addr + 0x2AA ) = 0x0055;   /* write additional unlock cycle 2 */
  *( (UINT16 *)base_addr + 0x555 ) = 0x0010;   /* write chip erase command        */
```

7.7.5 Erase Suspend/Erase Resume Commands

The Erase Suspend command allows the system to interrupt a sector erase operation and then read data from, or program data to, any sector not selected for erasure. The sector addresses are “don't-cares” when writing this command. This command is valid only during the sector erase operation, including the t_{SEA} time-out period during the sector erase command sequence. The Erase Suspend command is ignored if written during the chip erase operation.

When the Erase Suspend command is written during the sector erase operation, the device requires a maximum of 20 µs (5 µs typical) to suspend the erase operation. However, when the Erase Suspend command is written during the sector erase time-out, the device immediately terminates the time-out period and suspends the erase operation.

After the erase operation has been suspended, the device enters the erase-suspend-read mode. The system can read data from or program data to any sector not selected for erasure. (The device “erase suspends” all sectors selected for erasure.) Reading at any address within erase-suspended sectors produces status information on DQ7-DQ0. The system can use DQ7, or DQ6, and DQ2 together, to determine if a sector is actively erasing or is erase-suspended. Refer to Table 7.35 for information on these status bits.

After an erase-suspended program operation is complete, the device returns to the erase-suspend-read mode. The system can determine the status of the program operation using write operation status bits, just as in the standard program operation.

In the erase-suspend-read mode, the system can also issue the Autoselect command sequence. Refer to *Write Buffer Programming* on page 23 and the *Autoselect* on page 17 for details.

To resume the sector erase operation, the system must write the Erase Resume command. The address of the erase-suspended sector is a “don't-care” when writing this command. Further writes of the Resume command are ignored. Another Erase Suspend command can be written after the chip has resumed erasing.

Software Functions and Sample Code

Erase Suspend

(LLD Function = lld_EraseSuspendCmd)

Cycle	Operation	Byte Address	Word Address	Data
1	Write	Base + XXXh	Base + XXXh	00B0h

The following is a C source code example of using the erase suspend function. Refer to the *Cypress Low Level Driver User’s Guide* (available on www.cypress.com) for general information on Cypress Flash memory software development guidelines.

```
/* Example: Erase suspend command */
  *( (UINT16 *)base_addr ) = 0x00B0;   /* write suspend command           */
```

Erase Resume

(LLD Function = lld_EraseResumeCmd)

Cycle	Operation	Byte Address	Word Address	Data
1	Write	Sector Address	Sector Address	0030h

The following is a C source code example of using the erase resume function. Refer to the *Cypress Low Level Driver User’s Guide* (available on www.cypress.com) for general information on Cypress Flash memory software development guidelines.

```
/* Example: Erase resume command */
  *( (UINT16 *)sector_addr ) = 0x0030;   /* write resume command            */
  /* The flash needs adequate time in the resume state */
```

7.7.6 Program Suspend/Program Resume Commands

The Program Suspend command allows the system to interrupt an embedded programming operation or a “Write to Buffer” programming operation so that data can read from any non-suspended sector. When the Program Suspend command is written during a programming process, the device halts the programming operation within 15 µs maximum (5 µs typical) and updates the status bits. Addresses are “don't-cares” when writing the Program Suspend command.

After the programming operation has been suspended, the system can read array data from any non-suspended sector. The Program Suspend command may also be issued during a programming operation while an erase is suspended. In this case, data may be read from any addresses not within a sector in Erase Suspend or Program Suspend. If a read is needed from the Secured Silicon Sector area, then user must use the proper command sequences to enter and exit this region.

The system may also write the Autoselect Command Sequence when the device is in Program Suspend mode. The device allows reading Autoselect codes in the suspended sectors, since the codes are not stored in the memory array. When the device exits the Autoselect mode, the device reverts to Program Suspend mode, and is ready for another valid operation. See *Autoselect* on page 17 for more information.

After the Program Resume command is written, the device reverts to programming. The system can determine the status of the program operation using the write operation status bits, just as in the standard program operation. See *Write Operation Status* on page 32 for more information.

The system must write the Program Resume command (address bits are “don't care”) to exit the Program Suspend mode and continue the programming operation. Further writes of the Program Resume command are ignored. Another Program Suspend command can be written after the device has resumed programming.

Software Functions and Sample Code

Program Suspend

(LLD Function = lld_ProgramSuspendCmd)

Cycle	Operation	Byte Address	Word Address	Data
1	Write	Base + XXXh	Base + XXXh	00B0h

The following is a C source code example of using the program suspend function. Refer to the *Cypress Low Level Driver User’s Guide* (available on www.cypress.com) for general information on Cypress Flash memory software development guidelines.

```
/* Example: Program suspend command */
  *( (UINT16 *)base_addr ) = 0x00B0;   /* write suspend command           */
```

Program Resume

(LLD Function = lld_ProgramResumeCmd)

Cycle	Operation	Byte Address	Word Address	Data
1	Write	Base + XXXh	Base + XXXh	0030h

The following is a C source code example of using the program resume function. Refer to the *Cypress Low Level Driver User’s Guide* (available on www.cypress.com) for general information on Cypress Flash memory software development guidelines.

```
/* Example: Program resume command */
  *( (UINT16 *)base_addr ) = 0x0030;   /* write resume command            */
```

7.7.7 Accelerated Program

Accelerated single word programming and write buffer programming operations are enabled through the WP#/ACC pin. This method is faster than the standard program command sequences.

Note

The accelerated program functions must not be used more than 10 times per sector.

If the system asserts V_{HH} on this input, the device automatically enters the aforementioned Unlock Bypass mode and uses the higher voltage on the input to reduce the time required for program operations. The system can then use the Write Buffer Load command sequence provided by the Unlock Bypass mode. Note that if a "Write-to-Buffer-Abort Reset" is required while in Unlock Bypass mode, the full 3-cycle RESET command sequence must be used to reset the device. Removing V_{HH} from the ACC input, upon completion of the embedded program operation, returns the device to normal operation.

- Sectors must be unlocked prior to raising WP#/ACC to V_{HH}.
- The WP#/ACC pin must not be at V_{HH} for operations other than accelerated programming, or device damage may result.
- It is recommended that WP#/ACC apply V_{HH} after power-up sequence is completed. In addition, it is recommended that WP#/ACC apply from V_{HH} to V_{IH}/V_{IL} before powering down V_{CC}/V_{IO}.

7.7.8 Unlock Bypass

This device features an Unlock Bypass mode to facilitate shorter programming commands. Once the device enters the Unlock Bypass mode, only two write cycles are required to program data, instead of the normal four cycles.

This mode dispenses with the initial two unlock cycles required in the standard program command sequence, resulting in faster total programming time. The *Command Definitions* on page 64 shows the requirements for the unlock bypass command sequences.

During the unlock bypass mode, only the Read, Program, Write Buffer Programming, Write-to-Buffer-Abort Reset, Unlock Bypass Sector Erase, Unlock Bypass Chip Erase and Unlock Bypass Reset commands are valid. To exit the unlock bypass mode, the system must issue the two-cycle unlock bypass reset command sequence. The first cycle address is "don't care" and the data 90h. The second cycle need only contain the data 00h. The sector then returns to the read mode.

Software Functions and Sample Code

The following are C source code examples of using the unlock bypass entry, program, and exit functions. Refer to the *Cypress Low Level Driver User's Guide* (available soon on www.cypress.com) for general information on Cypress Flash memory software development guidelines.

Unlock Bypass Entry

(LLD Function = lld_UnlockBypassEntryCmd)

Cycle	Description	Operation	Byte Address	Word Address	Data
1	Unlock	Write	Base + AAAh	Base + 555h	00AAh
2	Unlock	Write	Base + 555h	Base + 2AAh	0055h
3	Entry Command	Write	Base + AAAh	Base + 555h	0020h

```
/* Example: Unlock Bypass Entry Command    */
  *( (UINT16 *)base_addr + 0x555 ) = 0x00AA;   /* write unlock cycle 1            */
  *( (UINT16 *)base_addr + 0x2AA ) = 0x0055;   /* write unlock cycle 2            */
  *( (UINT16 *)base_addr + 0x555 ) = 0x0020;   /* write unlock bypass command     */
  /* At this point, programming only takes two write cycles.   */
  /* Once you enter Unlock Bypass Mode, do a series of like    */
  /* operations (programming or sector erase) and then exit    */
  /* Unlock Bypass Mode before beginning a different type of   */
  /* operations.                                               */
```

Unlock Bypass Program

(LLD Function = lld_UnlockBypassProgramCmd)

Cycle	Description	Operation	Byte Address	Word Address	Data
1	Program Setup	Write	Base + XXXh	Base + XXXh	00A0h
2	Program Command	Write	Program Address	Program Address	Program Data

```
/* Example: Unlock Bypass Program Command  */
/* Do while in Unlock Bypass Entry Mode!   */
  *( (UINT16 *)base_addr ) = 0x00A0;   /* write program setup command     */
  *( (UINT16 *)pa )                = data;     /* write data to be programmed     */
  /* Poll until done or error.    */
  /* If done and more to program, */
  /* do above two cycles again.   */
```

Unlock Bypass Reset

(LLD Function = lld_UnlockBypassResetCmd)

Cycle	Description	Operation	Byte Address	Word Address	Data
1	Reset Cycle 1	Write	Base + XXXh	Base + XXXh	0090h
2	Reset Cycle 2	Write	Base + XXXh	Base + XXXh	0000h

```
/* Example: Unlock Bypass Exit Command */
  *( (UINT16 *)base_addr ) = 0x0090;
  *( (UINT16 *)base_addr ) = 0x0000;
```

7.8 Write Operation Status

The device provides several bits to determine the status of a program or erase operation. The following subsections describe the function of DQ1, DQ2, DQ3, DQ5, DQ6, and DQ7.

7.8.1 DQ7: Data# Polling

The Data# Polling bit, DQ7, indicates to the host system whether an Embedded Program or Erase algorithm is in progress or completed, or whether the device is in Erase Suspend. Data# Polling is valid after the rising edge of the final WE# pulse in the command sequence. Note that the Data# Polling is valid only for the last word being programmed in the write-buffer-page during Write Buffer Programming. Reading Data# Polling status on any word other than the last word to be programmed in the write-buffer-page returns false status information.

During the Embedded Program algorithm, the device outputs on DQ7 the complement of the datum programmed to DQ7. This DQ7 status also applies to programming during Erase Suspend. When the Embedded Program algorithm is complete, the device outputs the datum programmed to DQ7. The system must provide the program address to read valid status information on DQ7. If a program address falls within a protected sector, Data# polling on DQ7 is active, then that sector returns to the read mode.

During the Embedded Erase Algorithm, Data# polling produces a “0” on DQ7. When the Embedded Erase algorithm is complete, or if the device enters the Erase Suspend mode, Data# Polling produces a “1” on DQ7. The system must provide an address within any of the sectors selected for erasure to read valid status information on DQ7.

After an erase command sequence is written, if all sectors selected for erasing are protected, Data# Polling on DQ7 is active for approximately 100 µs, then the device returns to the read mode. If not all selected sectors are protected, the Embedded Erase algorithm erases the unprotected sectors, and ignores the selected sectors that are protected. However, if the system reads DQ7 at an address within a protected sector, the status may not be valid.

Just prior to the completion of an Embedded Program or Erase operation, DQ7 may change asynchronously with DQ6-DQ0 while Output Enable (OE#) is asserted low. That is, the device may change from providing status information to valid data on DQ7. Depending on when the system samples the DQ7 output, it may read the status or valid data. Even if the device has completed the program or erase operation and DQ7 has valid data, the data outputs on DQ6-DQ0 may be still invalid. Valid data on DQ7-D00 appears on successive read cycles.

See the following for more information: Table , shows the outputs for Data# Polling on DQ7. Figure 7.4, shows the Data# Polling algorithm; and Figure 11.7, shows the Data# Polling timing diagram.

Figure 7.4 Write Operation Status Flowchart

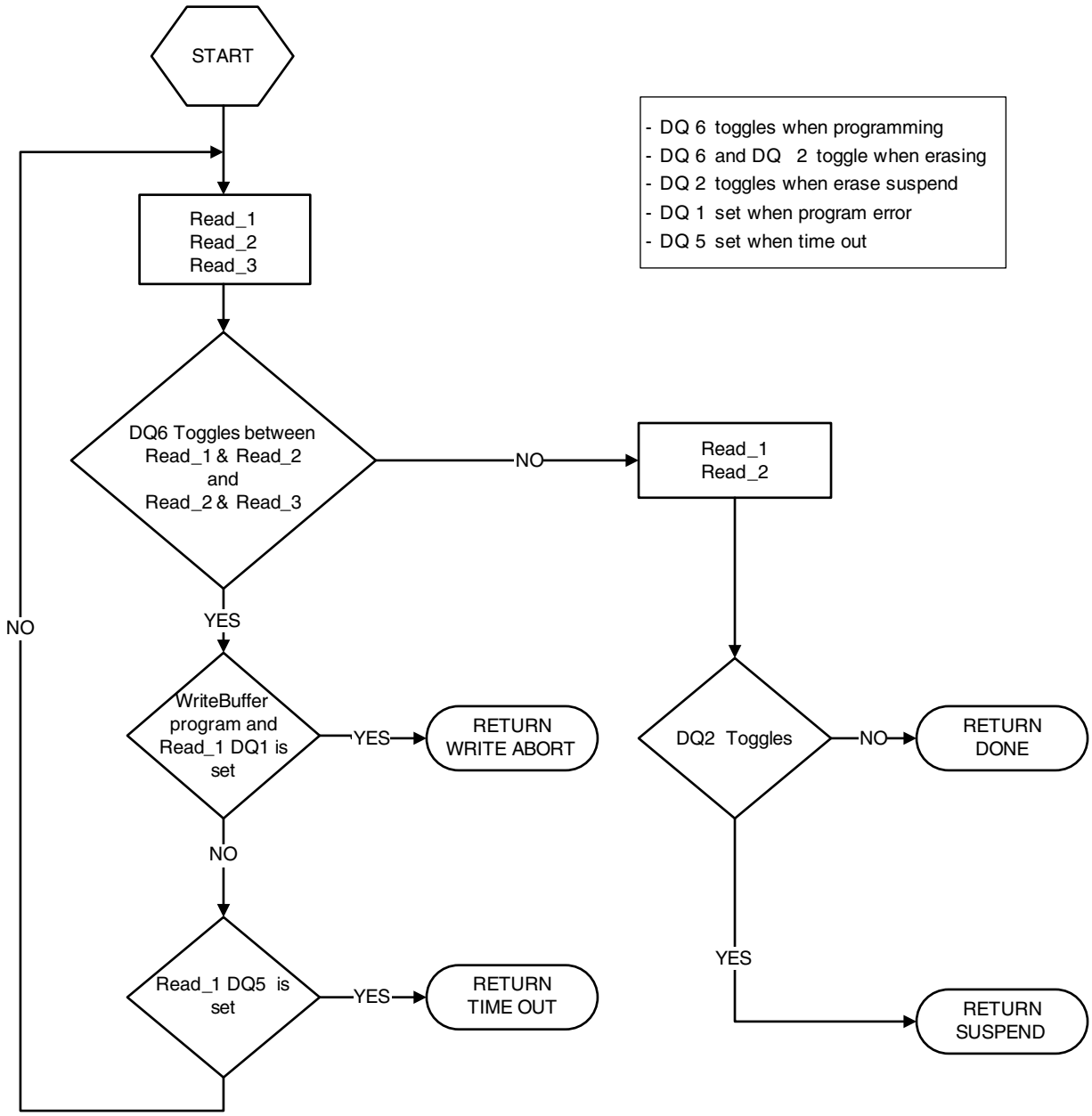

7.8.2 DQ6: Toggle Bit I

Toggle Bit I on DQ6 indicates whether an Embedded Program or Erase algorithm is in progress or complete, or whether the device has entered the Erase Suspend mode. Toggle Bit I may be read at any address, and is valid after the rising edge of the final WE# pulse in the command sequence (prior to the program or erase operation), and during the sector erase time-out.

During an Embedded Program or Erase algorithm operation, successive read cycles to any address that is being programmed or erased causes DQ6 to toggle. When the operation is complete, DQ6 stops toggling.

After an erase command sequence is written, if all sectors selected for erasing are protected, DQ6 toggles for approximately 100µs, then returns to reading array data. If not all selected sectors are protected, the Embedded Erase algorithm erases the unprotected sectors, and ignores the selected sectors that are protected.

The system can use DQ6 and DQ2 together to determine whether a sector is actively erasing or is erase-suspended. When the device is actively erasing (that is, the Embedded Erase algorithm is in progress), DQ6 toggles. When the device enters the Erase Suspend mode, DQ6 stops toggling. However, the system must also use DQ2 to determine which sectors are erasing or erase-suspended. Alternatively, the system can use DQ7 (see *DQ7: Data# Polling* on page 32).

If a program address falls within a protected sector, DQ6 toggles for approximately 1µs after the program command sequence is written, then returns to reading array data.

DQ6 also toggles during the erase-suspend-program mode, and stops toggling once the Embedded Program Algorithm is complete.

See the following for additional information: Figure 7.4, Figure 11.13 on page 60, and Table .

Toggle Bit I on DQ6 requires either OE# or CE# to be de-asserted and reasserted to show the change in state.

7.8.3 DQ2: Toggle Bit II

The “Toggle Bit II” on DQ2, when used with DQ6, indicates whether a particular sector is actively erasing (that is, the Embedded Erase algorithm is in progress), or whether that sector is erase-suspended. Toggle Bit II is valid after the rising edge of the final WE# pulse in the command sequence. DQ2 toggles when the system reads at addresses within those sectors that have been selected for erasure. But DQ2 cannot distinguish whether the sector is actively erasing or is erase-suspended. DQ6, by comparison, indicates whether the device is actively erasing, or is in Erase Suspend, but cannot distinguish which sectors are selected for erasure. Thus, both status bits are required for sector and mode information. Refer to Table to compare outputs for DQ2 and DQ6. See Figure 11.14 on page 60 for additional information.

7.8.4 Reading Toggle Bits DQ6/DQ2

Whenever the system initially begins reading toggle bit status, it must read DQ7–DQ0 at least twice in a row to determine whether a toggle bit is toggling. Typically, the system would note and store the value of the toggle bit after the first read. After the second read, the system would compare the new value of the toggle bit with the first. If the toggle bit is not toggling, the device has completed the program or erases operation. The system can read array data on DQ7–DQ0 on the following read cycle. However, if after the initial two read cycles, the system determines that the toggle bit is still toggling, the system also should note whether the value of DQ5 is high (see *DQ5: Exceeded Timing Limits* on page 35). If it is, the system should then determine again whether the toggle bit is toggling, since the toggle bit may have stopped toggling just as DQ5 went high. If the toggle bit is no longer toggling, the device has successfully completed the program or erases operation. If it is still toggling, the device did not complete the operation successfully, and the system must write the reset command to return to reading array data. The remaining scenario is that the system initially determines that the toggle bit is toggling and DQ5 has not gone high. The system may continue to monitor the toggle bit and DQ5 through successive read cycles, determining the status as described in the previous paragraph. Alternatively, it may choose to perform other system tasks. In this case, the system must start at the beginning of the algorithm when it returns to determine the status of the operation. Refer to Figure 7.4 for more details.

Note

When verifying the status of a write operation (embedded program/erase) of a memory sector, DQ6 and DQ2 toggle between high and low states in a series of consecutive and contiguous status read cycles. In order for this toggling behavior to be properly observed, the consecutive status bit reads must not be interleaved with read accesses to other memory sectors. If it is not possible to temporarily prevent reads to other memory sectors, then it is recommended to use the DQ7 status bit as the alternative method of determining the active or inactive status of the write operation.

7.8.5 DQ5: Exceeded Timing Limits

DQ5 indicates whether the program or erase time has exceeded a specified internal pulse count limit. Under these conditions DQ5 produces a “1,” indicating that the program or erase cycle was not successfully completed. The device does not output a 1 on DQ5 if the system tries to program a 1 to a location that was previously programmed to 0. Only an erase operation can change a 0 back to a 1. Under this condition, the device ignores the bit that was incorrectly instructed to be programmed from a 0 to a 1, while any other bits that were correctly requested to be changed from 1 to 0 are programmed. Attempting to program a 0 to a 1 is masked during the programming operation. Under valid DQ5 conditions, the system must write the reset command to return to the read mode (or to the erase-suspend-read mode if a sector was previously in the erase-suspend-program mode).

7.8.6 DQ3: Sector Erase Timeout State Indicator

After writing a sector erase command sequence, the system may read DQ3 to determine whether or not erasure has begun. (The sector erase timer does not apply to the chip erase command.) If additional sectors are selected for erasure, the entire time-out also applies after each additional sector erase command. When the time-out period is complete, DQ3 switches from a “0” to a “1.” If the time between additional sector erase commands from the system can be assumed to be less than t_{SEA}, then the system need not monitor DQ3. See *Sector Erase* on page 26 for more details.

After the sector erase command is written, the system should read the status of DQ7 (Data# Polling) or DQ6 (Toggle Bit I) to ensure that the device has accepted the command sequence, and then read DQ3. If DQ3 is “1,” the Embedded Erase algorithm has begun; all further commands (except Erase Suspend) are ignored until the erase operation is complete. If DQ3 is “0,” the device accepts additional sector erase commands. To ensure the command has been accepted, the system software should check the status of DQ3 prior to and following each sub-sequent sector erase command. If DQ3 is high on the second status check, the last command might not have been accepted. Table shows the status of DQ3 relative to the other status bits.

7.8.7 DQ1: Write to Buffer Abort

DQ1 indicates whether a Write to Buffer operation was aborted. Under these conditions DQ1 produces a “1”. The system must issue the “Write to Buffer Abort Reset” command sequence to return the device to reading array data. See *Write Buffer Programming* on page 23 for more details.

Write Operation Status

Status			DQ7 (Note 2)	DQ6	DQ5 (Note 1)	DQ3	DQ2 (Note 2)	DQ1	RY/ BY#
Standard Mode	Embedded Program Algorithm		DQ7#	Toggle	0	N/A	No toggle	0	0
	Embedded Erase Algorithm		0	Toggle	0	1	Toggle	N/A	0
Program Suspend Mode	Program-Suspend Read	Program-Suspended Sector	Invalid (not allowed)						1
		Non-Program Suspended Sector	Data						1
Erase Suspend Mode	Erase-Suspend Read	Erase-Suspended Sector	1	No toggle	0	N/A	Toggle	N/A	1
		Non-Erase Suspended Sector	Data						1
	Erase-Suspend-Program (Embedded Program)		DQ7#	Toggle	0	N/A	N/A	N/A	0
Write-to-Buffer	Busy (Note 3)		DQ7#	Toggle	0	N/A	N/A	0	0
	Abort (Note 4)		DQ7#	Toggle	0	N/A	N/A	1	0

Notes

1. *DQ5 switches to 1 when an Embedded Program, Embedded Erase, or Write-to-Buffer operation has exceeded the maximum timing limits. Refer to DQ5: Exceeded Timing Limits on page 35 for more information.*
2. *DQ7 and DQ2 require a valid address when reading status information. Refer to the appropriate subsection for further details.*
3. *The Data# Polling algorithm should be used to monitor the last loaded write-buffer address location.*
4. *DQ1 switches to 1 when the device has aborted the write-to-buffer operation*

7.9 Writing Commands/Command Sequences

During a write operation, the system must drive CE# and WE# to V_{IL} and OE# to V_{IH} when providing an address, command, and data. Addresses are latched on the last falling edge of WE# or CE#, while data is latched on the 1st rising edge of WE# or CE#. An erase operation can erase one sector, multiple sectors, or the entire device. Table – Table indicate the address space that each sector occupies. The device address space is divided into uniform 64KW/128KB sectors. A sector address is the set of address bits required to uniquely select a sector. I_{CC2} in “DC Characteristics” represents the active current specification for the write mode. “AC Characteristics” contains timing specification tables and timing diagrams for write operations.

7.9.1 RY/BY#

The RY/BY# is a dedicated, open-drain output pin that indicates whether an Embedded Algorithm is in progress or complete. The RY/BY# status is valid after the rising edge of the final WE# pulse in the command sequence. Since RY/BY# is an open-drain output, several RY/BY# pins can be tied together in parallel with a pull-up resistor to V_{CC}. This feature allows the host system to detect when data is ready to be read by simply monitoring the RY/BY# pin, which is a dedicated output.

7.9.2 Hardware Reset

The RESET# input provides a hardware method of resetting the device to reading array data. When RESET# is driven low for at least a period of t_{RP} (RESET# Pulse Width), the device immediately terminates any operation in progress, tristates all outputs, resets the configuration register, and ignores all read/write commands for the duration of the RESET# pulse. The device also resets the internal state machine to reading array data.

To ensure data integrity Program/Erase operations that were interrupted should be reinitiated once the device is ready to accept another command sequence.

When RESET# is held at V_{SS}, the device draws V_{CC} reset current (I_{CC5}). If RESET# is held at V_{IL}, but not at V_{SS}, the standby current is greater. RESET# may be tied to the system reset circuitry which enables the system to read the boot-up firmware from the Flash memory upon a system reset. See Figure 11.7 on page 55 and Figure 11.8 on page 56 for timing diagrams.

7.9.3 Software Reset

Software reset is part of the command set (see Table on page 65) that also returns the device to array read mode and must be used for the following conditions:

1. to exit Autoselect mode
2. when DQ5 goes high during write status operation that indicates program or erase cycle was not successfully completed
3. exit sector lock/unlock operation.
4. to return to erase-suspend-read mode if the device was previously in Erase Suspend mode.
5. after any aborted operations

Software Functions and Sample Code

Reset

(LLD Function = lld_ResetCmd)

Cycle	Operation	Byte Address	Word Address	Data
Reset Command	Write	Base + xxxh	Base + xxxh	00F0h

Note
Base = Base Address.

The following is a C source code example of using the reset function. Refer to the *Cypress Low Level Driver User's Guide* (available on www.cypress.com) for general information on Cypress Flash memory software development guidelines.

```
/* Example: Reset (software reset of Flash state machine) */
  *( (UINT16 *)base_addr ) = 0x00F0;
```

The following are additional points to consider when using the reset command:

- This command resets the sectors to the read and address bits are ignored.
- Reset commands are ignored during program and erase operations.
- The reset command may be written between the cycles in a program command sequence before programming begins (prior to the third cycle). This resets the sector to which the system was writing to the read mode.
- If the program command sequence is written to a sector that is in the Erase Suspend mode, writing the reset command returns that sector to the erase-suspend-read mode.
- The reset command may be written during an Autoselect command sequence.
- If a sector has entered the Autoselect mode while in the Erase Suspend mode, writing the reset command returns that sector to the erase-suspend-read mode.
- If DQ1 goes high during a Write Buffer Programming operation, the system must write the "Write to Buffer Abort Reset" command sequence to RESET the device to reading array data. The standard RESET command does not work during this condition.
- To exit the unlock bypass mode, the system must issue a two-cycle unlock bypass reset command sequence [see *Command Definitions* on page 64 for details].

8. Advanced Sector Protection/Unprotection

The Advanced Sector Protection/Unprotection feature disables or enables programming or erase operations in any or all sectors and can be implemented through software and/or hardware methods, which are independent of each other. This section describes the various methods of protecting data stored in the memory array. An overview of these methods in shown in Figure 8.1.

Figure 8.1 Advanced Sector Protection/Unprotection

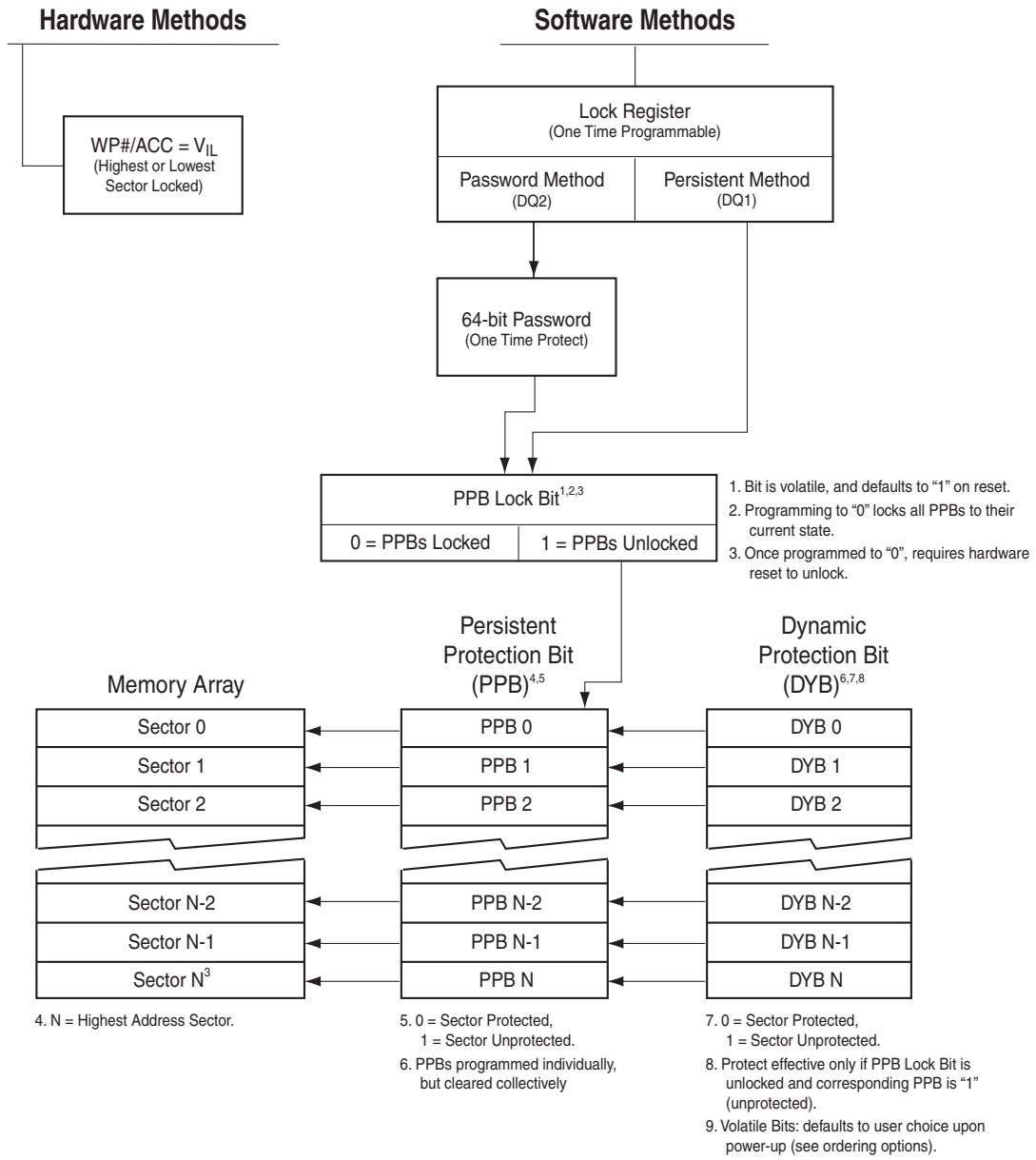

8.1 Lock Register

As shipped from the factory, all devices default to the persistent mode when power is applied, and all sectors are unprotected, unless otherwise chosen through the DYB ordering option (see *Ordering Information* on page 4). The device programmer or host system must then choose which sector protection method to use. Programming (setting to “0”) any one of the following two one-time programmable, non-volatile bits locks the part permanently in that mode:

- Lock Register Persistent Protection Mode Lock Bit (DQ1)
- Lock Register Password Protection Mode Lock Bit (DQ2)

Lock Register

DQ15-3	DQ2	DQ1	DQ0
Don’t Care	Password Protection Mode Lock Bit	Persistent Protection Mode Lock Bit	Secured Silicon Sector Protection Bit

For programming lock register bits refer to Table on page 67 and Table on page 71.

Notes

1. If the password mode is chosen, the password must be programmed before setting the corresponding lock register bit.
2. After the Lock Register Bits Command Set Entry command sequence is written, reads and writes for Sector 0 are disabled, while reads from other sectors are allowed until exiting this mode.
3. If both lock bits are selected to be programmed (to zeros) at the same time, the operation aborts.
4. Once the Password Mode Lock Bit is programmed, the Persistent Mode Lock Bit is permanently disabled, and no changes to the protection scheme are allowed. Similarly, if the Persistent Mode Lock Bit is programmed, the Password Mode is permanently disabled.

After selecting a sector protection method, each sector can operate in any of the following three states:

1. *Constantly locked.* The selected sectors are protected and can not be reprogrammed unless PPB lock bit is cleared via a password, hardware reset, or power cycle.
2. *Dynamically locked.* The selected sectors are protected and can be altered via software commands.
3. *Unlocked.* The sectors are unprotected and can be erased and/or programmed.

These states are controlled by the bit types described in Section 8.2–Section 8.5.

8.2 Persistent Protection Bits

The Persistent Protection Bits are unique and nonvolatile for each sector and have the same endurances as the Flash memory. Preprogramming and verification prior to erasure are handled by the device, and therefore do not require system monitoring.

Notes

1. Each PPB is individually programmed and all are erased in parallel.
2. While programming PPB for a sector, array data can be read from any other sector, except Sector 0 (used for Data# Polling) and the sector in which sector PPB is being programmed.
3. Entry command disables reads and writes for the sector selected.
4. Reads within that sector return the PPB status for that sector.
5. All Reads must be performed using the read mode.
6. The specific sector address (A25-A16 GL01GP, A24-A16 GL512P, A23-A16 GL256P, A22-A16 GL128P) are written at the same time as the program command.
7. If the PPB Lock Bit is set, the PPB Program or erase command does not execute and times-out without programming or erasing the PPB.
8. There are no means for individually erasing a specific PPB and no specific sector address is required for this operation.

9. Exit command must be issued after the execution which resets the device to read mode and re-enables reads and writes for Sector 0.
10. The programming state of the PPB for a given sector can be verified by writing a PPB Status Read Command to the device as described by the flow chart shown in Figure 8.2.

Figure 8.2 PPB Program Algorithm

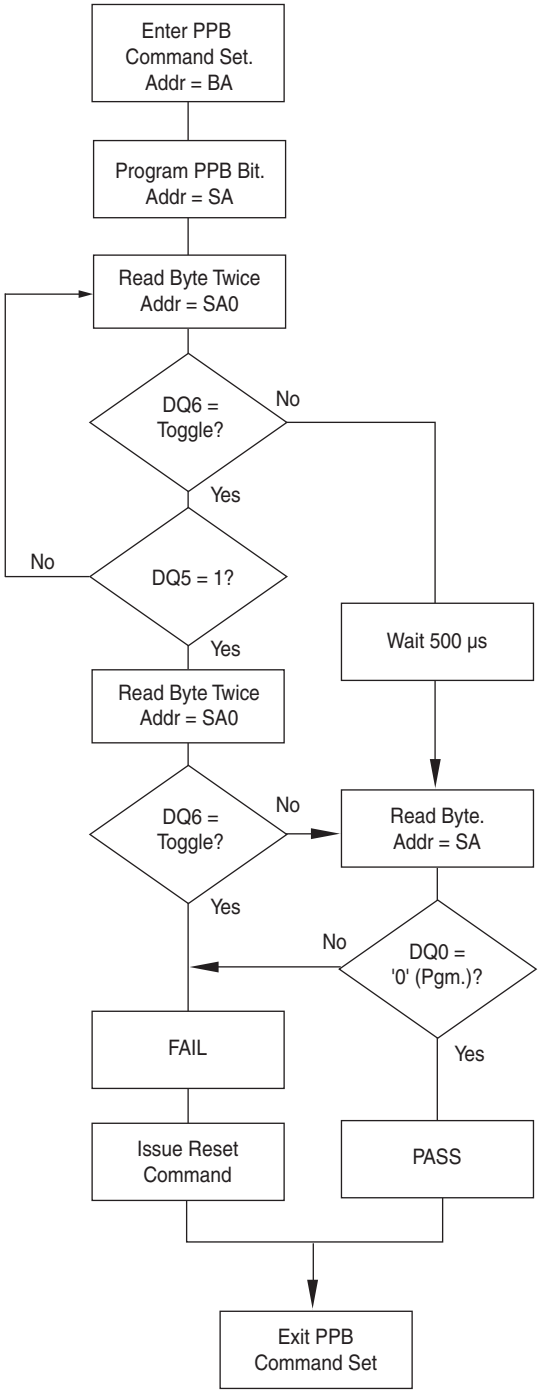

8.2.1 Dynamic Protection Bits

Dynamic Protection Bits are volatile and unique for each sector and can be individually modified. DYBs only control the protection scheme for unprotected sectors that have their PPBs cleared (erased to “1”). By issuing the DYB Set or Clear command sequences, the DYBs are set (programmed to “0”) or cleared (erased to “1”), thus placing each sector in the protected or unprotected state respectively. This feature allows software to easily protect sectors against inadvertent changes yet does not prevent the easy removal of protection when changes are needed.

Notes

1. The DYBs can be set (programmed to “0”) or cleared (erased to “1”) as often as needed. When the parts are first shipped, the PPBs are cleared (erased to “1”) and upon power up or reset, the DYBs can be set or cleared depending upon the ordering option chosen.
2. If the option to clear the DYBs after power up is chosen, (erased to “1”), then the sectorsmay be modified depending upon the PPB state of that sector (see Table).
3. The sectors would be in the protected state If the option to set the DYBs after power up is chosen (programmed to “0”).
4. It is possible to have sectors that are persistently locked with sectors that are left in the dynamic state.
5. The DYB Set or Clear commands for the dynamic sectors signify protected or unprotectedstate of the sectors respectively. However, if there is a need to change the status of the persistently locked sectors, a few more steps are required. First, the PPB Lock Bit must be cleared by either putting the device through a power-cycle, or hardware reset. The PPBs can then be changed to reflect the desired settings. Setting the PPB Lock Bit once again locks the PPBs, and the device operates normally again.
6. To achieve the best protection, it is recommended to execute the PPB Lock Bit Set command early in the boot code and protect the boot code by holding WP#/ACC = V_{IL}. Note that the PPB and DYB bits have the same function when WP#/ACC = V_{HH} as they do when ACC =V_{IH}.

8.3 Persistent Protection Bit Lock Bit

The Persistent Protection Bit Lock Bit is a global volatile bit for all sectors. When set (programmed to “0”), it locks all PPBs and when cleared (programmed to “1”), allows the PPBs to be changed. There is only one PPB Lock Bit per device.

Notes

1. No software command sequence unlocks this bit unless the device is in the password protection mode; only a hardware reset or a power-up clears this bit.
2. The PPB Lock Bit must be set (programmed to “0”) only after all PPBs are configured to the desired settings.

8.4 Password Protection Method

The Password Protection Method allows an even higher level of security than the Persistent Sector Protection Mode by requiring a 64-bit password for unlocking the device PPB Lock Bit. In addition to this password requirement, after power up and reset, the PPB Lock Bit is set “0” to maintain the password mode of operation. Successful execution of the Password Unlock command by entering the entire password clears the PPB Lock Bit, allowing for sector PPBs modifications.

Notes

1. There is no special addressing order required for programming the password. Once the Password is written and verified, the Password Mode Locking Bit must be set in order to prevent access.
2. The Password Program Command is only capable of programming “0”s. Programming a “1” after a cell is programmed as a “0” results in a time-out with the cell as a “0”.
3. The password is all “1”s when shipped from the factory.
4. All 64-bit password combinations are valid as a password.
5. There is no means to verify what the password is after it is set.
6. The Password Mode Lock Bit, once set, prevents reading the 64-bit password on the data bus and further password programming.

7. The Password Mode Lock Bit is not erasable.
8. The lower two address bits (A1–A0) are valid during the Password Read, Password Program, and Password Unlock.
9. The exact password must be entered in order for the unlocking function to occur.
10. The Password Unlock command cannot be issued any faster than 1 µs at a time to prevent a hacker from running through all the 64-bit combinations in an attempt to correctly match a password.
11. Approximately 1 µs is required for unlocking the device after the valid 64-bit password is given to the device.
12. Password verification is only allowed during the password programming operation.
13. All further commands to the password region are disabled and all operations are ignored.
14. If the password is lost after setting the Password Mode Lock Bit, there is no way to clear the PPB Lock Bit.
15. Entry command sequence must be issued prior to any of any operation and it disables reads and writes for Sector 0. Reads and writes for other sectors excluding Sector 0 are allowed.
16. If the user attempts to program or erase a protected sector, the device ignores the command and returns to read mode.
17. A program or erase command to a protected sector enables status polling and returns to read mode without having modified the contents of the protected sector.
18. The programming of the DYB, PPB, and PPB Lock for a given sector can be verified by writing individual status read commands DYB Status, PPB Status, and PPB Lock Status to the device.

Figure 8.3 Lock Register Program Algorithm

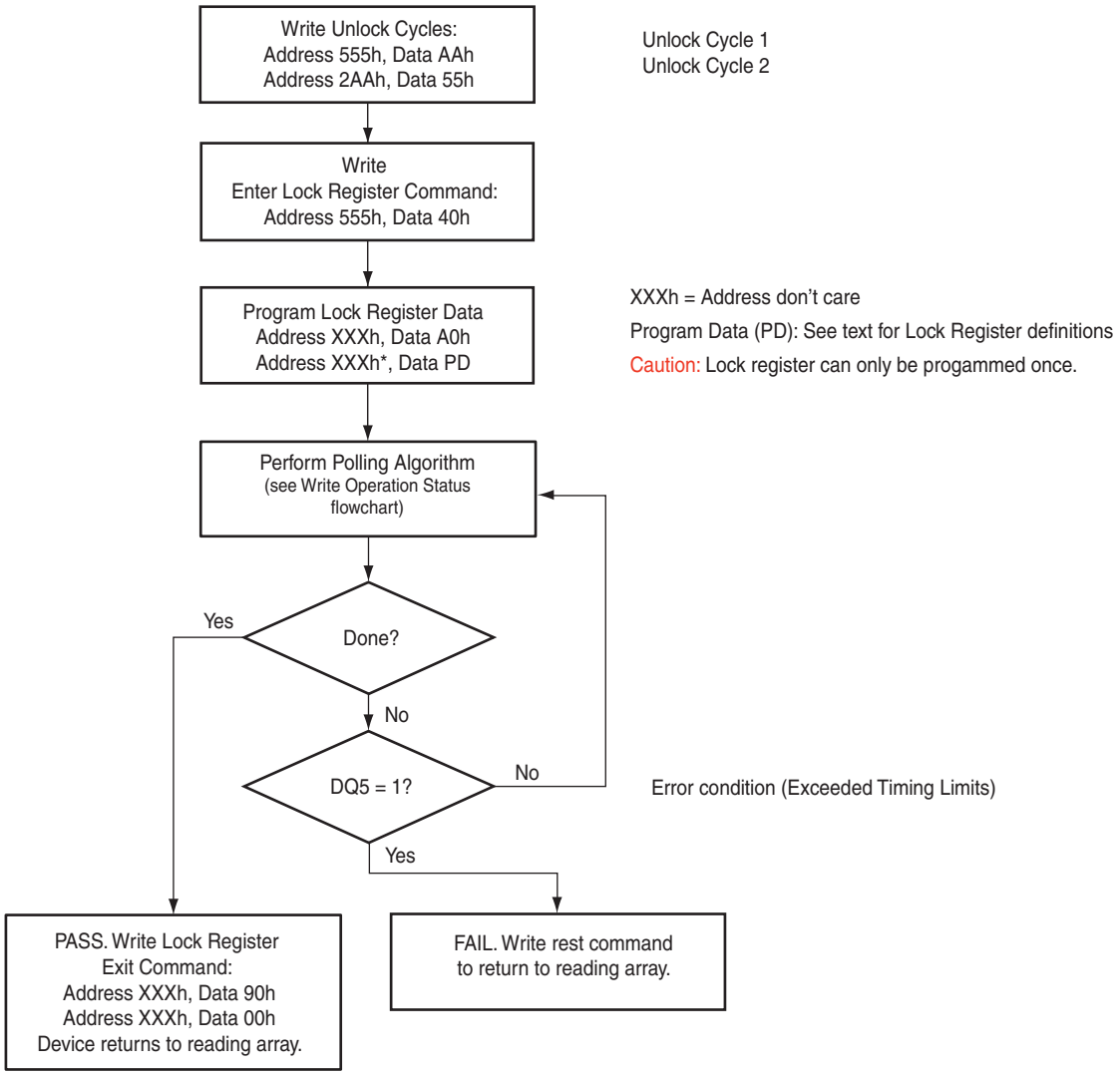

8.5 Advanced Sector Protection Software Examples

Sector Protection Schemes: DYB, PPB and PPB Lock Bit Combinations

Unique Device PPB Lock Bit 0 = locked 1 = unlocked		Sector PPB 0 = protected 1 = unprotected	Sector DYB 0 = protected 1 = unprotected	Sector Protection Status
Any Sector	0	0	x	Protected through PPB
Any Sector	0	0	x	Protected through PPB
Any Sector	0	1	1	Unprotected
Any Sector	0	1	0	Protected through DYB
Any Sector	1	0	x	Protected through PPB
Any Sector	1	0	x	Protected through PPB
Any Sector	1	1	0	Protected through DYB
Any Sector	1	1	1	Unprotected

Table contains all possible combinations of the DYB, PPB, and PPB Lock Bit relating to the status of the sector. In summary, if the PPB Lock Bit is locked (set to “0”), no changes to the PPBs are allowed. The PPB Lock Bit can only be unlocked (reset to “1”) through a hardware reset or power cycle. See also Figure 8.1 for an overview of the Advanced Sector Protection feature.

8.6 Hardware Data Protection Methods

The device offers two main types of data protection at the sector level via hardware control:

- When WP#/ACC is at V_{IL}, the either the highest or lowest sector is locked (device specific).

There are additional methods by which intended or accidental erasure of any sectors can be prevented via hardware means. The following subsections describes these methods:

8.6.1 WP#/ACC Method

The Write Protect feature provides a hardware method of protecting one outermost sector. This function is provided by the WP#/ACC pin and overrides the previously discussed Sector Protection/Unprotection method.

If the system asserts V_{IL} on the WP#/ACC pin, the device disables program and erase functions in the highest or lowest sector independently of whether the sector was protected or unprotected using the method described in *Advanced Sector Protection/Unprotection* on page 38.

If the system asserts V_{IH} on the WP#/ACC pin, the device reverts to whether the boot sectors were last set to be protected or unprotected. That is, sector protection or unprotection for these sectors depends on whether they were last protected or unprotected.

The WP#/ACC pin must be held stable during a command sequence execution. WP# has an internal pull-up; when unconnected, WP# is set at V_{IH}.

Note

If WP#/ACC is at V_{IL} when the device is in the standby mode, the maximum input load current is increased. See Table 11.2 on page 50 for details.

8.6.2 Low V_{CC} Write Inhibit

When V_{CC} is less than V_{LKO}, the device does not accept any write cycles. This protects data during V_{CC} power-up and power-down.

The command register and all internal program/erase circuits are disabled, and the device resets to reading array data. Subsequent writes are ignored until V_{CC} is greater than V_{LKO}. The system must provide the proper signals to the control inputs to prevent unintentional writes when V_{CC} is greater than V_{LKO}.

8.6.3 Write Pulse "Glitch Protection"

Noise pulses of less than 5 ns (typical) on OE#, CE# or WE# do not initiate a write cycle.

8.6.4 Power-Up Write Inhibit

If WE# = CE# = RESET# = V_{IL} and OE# = V_{IH} during power up, the device does not accept commands on the rising edge of WE#. The internal state machine is automatically reset to the read mode on power-up.

9. Power Conservation Modes

9.1 Standby Mode

When the system is not reading or writing to the device, it can place the device in the standby mode. In this mode, current consumption is greatly reduced, and the outputs are placed in the high impedance state, independent of the OE# input. The device enters the CMOS standby mode when the CE# and RESET# inputs are both held at V_{CC} ± 0.3 V. The device requires standard access time (t_{CE}) for read access, before it is ready to read data. If the device is deselected during erasure or programming, the device draws active current until the operation is completed. I_{CC4} in "DC Characteristics" represents the standby current specification

9.2 Automatic Sleep Mode

The automatic sleep mode minimizes Flash device energy consumption. The device automatically enables this mode when addresses remain stable for t_{ACC} + 30 ns. The automatic sleep mode is independent of the CE#, WE#, and OE# control signals. Standard address access timings provide new data when addresses are changed. While in sleep mode, output data is latched and always available to the system. I_{CC6} in Section 11.6 represents the automatic sleep mode current specification.

9.3 Hardware RESET# Input Operation

The RESET# input provides a hardware method of resetting the device to reading array data. When RESET# is driven low for at least a period of t_{RP}, the device immediately terminates any operation in progress, tristates all outputs, and ignores all read/write commands for the duration of the RESET# pulse. The device also resets the internal state machine to reading array data. The operation that was interrupted should be reinitiated once the device is ready to accept another command sequence to ensure data integrity.

When RESET# is held at V_{SS} ± 0.3 V, the device draws I_{CC} reset current (I_{CC5}). If RESET# is held at V_{IL} but not within V_{SS} ± 0.3 V, the standby current is greater.

RESET# may be tied to the system reset circuitry and thus, a system reset would also reset the Flash memory, enabling the system to read the boot-up firmware from the Flash memory.

9.4 Output Disable (OE#)

When the OE# input is at V_{IH}, output from the device is disabled. The outputs are placed in the high impedance state. (With the exception of RY/BY#.)

10. Secured Silicon Sector Flash Memory Region

The Secured Silicon Sector provides an extra Flash memory region that enables permanent part identification through an Electronic Serial Number (ESN). The Secured Silicon Sector is 128 words in length and all Secured Silicon reads outside of the 128-word address range returns invalid data. The Secured Silicon Sector Indicator Bit, DQ7, (at Autoselect address 03h) is used to indicate whether or not the Secured Silicon Sector is locked when shipped from the factory.

Please note the following general conditions:

- On power-up, or following a hardware reset, the device reverts to sending commands to the normal address space.
- Reads outside of sector SA0 return memory array data.
- Sector SA0 is remapped from memory array to Secured Silicon Sector array.
- Once the Secured Silicon Sector Entry Command is issued, the Secured Silicon Sector Exit command must be issued to exit Secured Silicon Sector Mode.
- The Secured Silicon Sector is not accessible when the device is executing an Embedded Program or Embedded Erase algorithm.
- The ACC function and unlock bypass modes are not available when the Secured Silicon Sector is enabled.

Secured Silicon Sector Addresses

Secured Silicon Sector Address Range	Customer Lockable	ESN Factory Locked	ExpressFlash Factory Locked
000000h–000007h	Determined by customer	ESN	ESN or determined by customer
000008h–00007Fh		Unavailable	Determined by customer

10.1 Factory Locked Secured Silicon Sector

The Factory Locked Secured Silicon Sector is always protected when shipped from the factory and has the Secured Silicon Sector Indicator Bit (DQ7) permanently set to a “1”. This prevents cloning of a factory locked part and ensures the security of the ESN and customer code once the product is shipped to the field.

These devices are available pre-programmed with one of the following:

- A random, 8 Word secure ESN only within the Secured Silicon Sector (at addresses 000000H - 000007H)
- Both a random, secure ESN and customer code through the Cypress programming service.

Customers may opt to have their code programmed through the Cypress programming services. Cypress programs the customer's code, with or without the random ESN. The devices are then shipped from the Cypress factory with the Secured Silicon Sector permanently locked. Contact your local representative for details on using Cypress programming services.

10.2 Customer Lockable Secured Silicon Sector

The Customer Lockable Secured Silicon Sector is always shipped unprotected (DQ7 set to “0”), allowing customers to utilize that sector in any manner they choose. If the security feature is not required, the Secured Silicon Sector can be treated as an additional Flash memory space.

Please note the following:

- Once the Secured Silicon Sector area is protected, the Secured Silicon Sector Indicator Bit is permanently set to “0.”
- The Secured Silicon Sector can be read any number of times, but can be programmed and locked only once. The Secured Silicon Sector lock must be used with caution as once locked, there is no procedure available for unlocking the Secured Silicon Sector area and none of the bits in the Secured Silicon Sector memory space can be modified in any way.
- The accelerated programming (ACC) and unlock bypass functions are not available when the Secured Silicon Sector is enabled.
- Once the Secured Silicon Sector is locked and verified, the system must write the Exit Secured Silicon Sector Region command sequence which return the device to the memory array at sector 0.

10.3 Secured Silicon Sector Entry/Exit Command Sequences

The system can access the Secured Silicon Sector region by issuing the three-cycle Enter Secured Silicon Sector command sequence. The device continues to access the Secured Silicon Sector region until the system issues the four-cycle Exit Secured Silicon Sector command sequence.

See *Command Definitions* on page 64 [Secured Silicon Sector Command Table, Appendix
Table on page 65 through Table on page 71 for address and data requirements for both command sequences.

The Secured Silicon Sector Entry Command allows the following commands to be executed

- Read customer and factory Secured Silicon areas
- Program the customer Secured Silicon Sector

After the system has written the Enter Secured Silicon Sector command sequence, it may read the Secured Silicon Sector by using the addresses normally occupied by sector SA0 within the memory array. This mode of operation continues until the system issues the Exit Secured Silicon Sector command sequence, or until power is removed from the device.

Software Functions and Sample Code

The following are C functions and source code examples of using the Secured Silicon Sector Entry, Program, and exit commands. Refer to the *Cypress Low Level Driver User’s Guide* (available soon on www.cypress.com) for general information on Cypress Flash memory software development guidelines.

Secured Silicon Sector Entry

(LLD Function = lld_SecSiSectorEntryCmd)

Cycle	Operation	Byte Address	Word Address	Data
Unlock Cycle 1	Write	Base + AAAh	Base + 555h	00AAh
Unlock Cycle 2	Write	Base + 555h	Base + 2AAh	0055h
Entry Cycle	Write	Base + AAAh	Base + 555h	0088h

Note
Base = Base Address.

```
/* Example: SecSi Sector Entry Command */
  *( (UINT16 *)base_addr + 0x555 ) = 0x00AA;   /* write unlock cycle 1            */
  *( (UINT16 *)base_addr + 0x2AA ) = 0x0055;   /* write unlock cycle 2            */
  *( (UINT16 *)base_addr + 0x555 ) = 0x0088;   /* write Secsi Sector Entry Cmd    */
```

Secured Silicon Sector Program

(LLD Function = lld_ProgramCmd)

Cycle	Operation	Byte Address	Word Address	Data
Unlock Cycle 1	Write	Base + AAAh	Base + 555h	00AAh
Unlock Cycle 2	Write	Base + 555h	Base + 2AAh	0055h
Program Setup	Write	Base + AAAh	Base + 555h	00A0h
Program	Write	Word Address	Word Address	Data Word

Note
Base = Base Address.

```
/* Example: Program Command */
*( (UINT16 *)base_addr + 0x555 ) = 0x00AA; /* write unlock cycle 1 */
*( (UINT16 *)base_addr + 0x2AA ) = 0x0055; /* write unlock cycle 2 */
*( (UINT16 *)base_addr + 0x555 ) = 0x00A0; /* write program setup command */
*( (UINT16 *)pa ) = data; /* write data to be programmed */
/* Poll for program completion */
```

Secured Silicon Sector Exit

(LLD Function = lld_SecSiSectorExitCmd)

Cycle	Operation	Byte Address	Word Address	Data
Unlock Cycle 1	Write	Base + AAAh	Base + 555h	00AAh
Unlock Cycle 2	Write	Base + 555h	Base + 2AAh	0055h
Exit Cycle 3	Write	Base + AAAh	Base + 555h	0090h
Exit Cycle 4	Write	Base + XXXh	Base + XXXh	0000h

Note
Base = Base Address.

```
/* Example: SecSi Sector Exit Command */
  *( (UINT16 *)base_addr + 0x555 ) = 0x00AA;   /* write unlock cycle 1            */
  *( (UINT16 *)base_addr + 0x2AA ) = 0x0055;   /* write unlock cycle 2            */
  *( (UINT16 *)base_addr + 0x555 ) = 0x0090;   /* write SecSi Sector Exit cycle 3 */
  *( (UINT16 *)base_addr + 0x000 ) = 0x0000;   /* write SecSi Sector Exit cycle 4 */
```

11. Electrical Specifications

11.1 Absolute Maximum Ratings

Description		Rating
Storage Temperature, Plastic Packages		–65°C to +150°C
Ambient Temperature with Power Applied		–65°C to +125°C
Voltage with Respect to Ground	All Inputs and I/Os except as noted below (Note 1)	–0.5 V to V_{CC} + 0.5 V
	V_{CC} (Note 1)	–0.5 V to +4.0 V
	V_{IO}	–0.5V to +4.0V
	A9 and ACC (Note 2)	–0.5 V to +12.5 V
Output Short Circuit Current (Note 3)		200 mA

Notes

1. *Minimum DC voltage on input or I/Os is –0.5 V. During voltage transitions, inputs or I/Os may undershoot V_{SS} to –2.0 V for periods of up to 20 ns. See Figure 11.1. Maximum DC voltage on input or I/Os is V_{CC} + 0.5 V. During voltage transitions inputs or I/Os may overshoot to V_{CC} + 2.0 V for periods up to 20 ns. See Figure 11.2.*
2. *Minimum DC input voltage on pins A9 and ACC is -0.5V. During voltage transitions, A9 and ACC may overshoot V_{SS} to –2.0 V for periods of up to 20 ns. See Figure 11.1. Maximum DC voltage on pins A9 and ACC is +12.5 V, which may overshoot to 14.0 V for periods up to 20 ns.*
3. *No more than one output may be shorted to ground at a time. Duration of the short circuit should not be greater than one second.*
4. *Stresses above those listed under "Absolute Maximum Ratings" may cause permanent damage to the device. This is a stress rating only; functional operation of the device at these or any other conditions above those indicated in the operational sections of this data sheet is not implied. Exposure of the device to absolute maximum rating conditions for extended periods may affect device reliability.*

Figure 11.1 Maximum Negative Overshoot Waveform

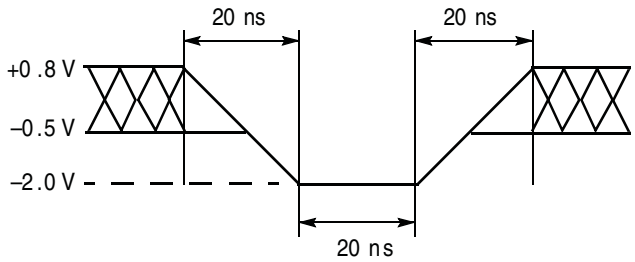

Figure 11.2 Maximum Positive Overshoot Waveform

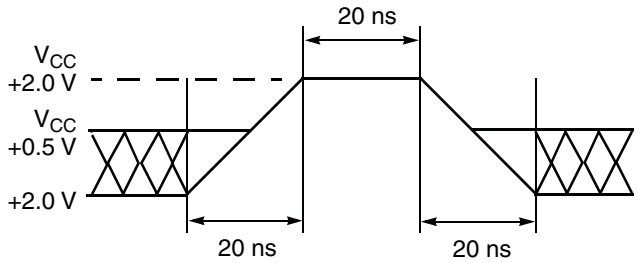

11.2 Operating Ranges

Specifications		Range
Ambient Temperature (TA), Industrial (I) Device		–40°C to +85°C
Ambient Temperature (TA), Commercial (C) Device		0°C to +85°C
Supply Voltages	V_{CC}	+2.7 V to 3.6 V or +3.0 V to 3.6 V
V_{IO} Supply Voltages	V_{IO}	+1.65 V to V_{CC}

Notes

1. *Operating ranges define those limits between which the functionality of the device is guaranteed.*
2. *See also Ordering Information on page 4.*
3. *For valid V_{CC}/V_{IO} range combinations, see Ordering Information on page 4. The I/Os do not operate at 3 V when V_{IO} = 1.8 V.*

11.3 Test Conditions

Figure 11.3 Test Setup

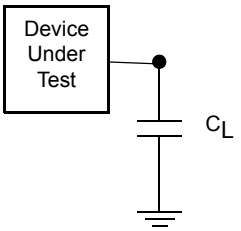

Test Specifications

Test Condition	All Speeds	Unit
Output Load Capacitance, C_L (including jig capacitance)	30	pF
Input Rise and Fall Times	5	ns
Input Pulse Levels	0.0–V_{IO}	V
Input timing measurement reference levels (See Note)	0.5V_{IO}	V
Output timing measurement reference levels	0.5 V_{IO}	V

Note

If $V_{IO} < V_{CC}$, the reference level is 0.5 V_{IO}.

11.4 Key to Switching Waveforms

Waveform	Inputs	Outputs
	Steady	
	Changing from H to L	
	Changing from L to H	
	Don't Care, Any Change Permitted	Changing, State Unknown
	Does Not Apply	Center Line is High Impedance State (High Z)

11.5 Switching Waveforms

Figure 11.4 Input Waveforms and Measurement Levels

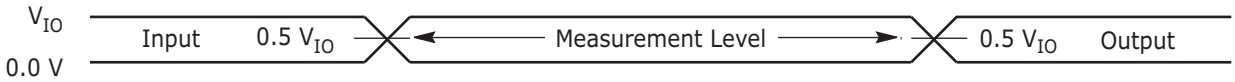

Note
If $V_{IO} < V_{CC}$, the input measurement reference level is 0.5 V_{IO}.

11.6 DC Characteristics

S29GL-P DC Characteristics (CMOS Compatible)

Parameter Symbol	Parameter Description (Notes)	Test Conditions		Min	Typ	Max	Unit
I_{LI}	Input Load Current	$V_{IN} = V_{SS}$ to V_{CC} $V_{CC} = V_{CC\ max}$	WP/ACC			±5.0	µA
			Others			±2.0	
I_{LIT}	A9 Input Load Current	$V_{CC} = V_{CC\ max}$; A9 = 12.5 V				35	µA
I_{LO}	Output Leakage Current	$V_{OUT} = V_{SS}$ to V_{CC} , $V_{CC} = V_{CC\ max}$				±1.0	µA
I_{CC1}	V_{CC} Active Read Current (1)	CE# = V_{IL}, OE# = V_{IH}, $V_{CC} = V_{CCmax}$, *f* = 1 MHz			6	20	mA
		CE# = V_{IL}, OE# = V_{IH}, $V_{CC} = V_{CCmax}$, *f* = 5 MHz			30	55	
		CE# = V_{IL}, OE# = V_{IH}, $V_{CC} = V_{CCmax}$, *f* = 10 MHz			60	110	
I_{IO2}	V_{IO} Non-Active Output	CE# = V_{IL}, OE# = V_{IH}			0.2	10	mA
I_{CC2}	V_{CC} Intra-Page Read Current (1)	CE# = V_{IL}, OE# = V_{IH}, $V_{CC} = V_{CCmax}$, *f* = 10 MHz			1	10	mA
		CE# = V_{IL}, OE# = V_{IH}, $V_{CC} = V_{CCmax}$, *f* = 33 MHz			5	20	
I_{CC3}	V_{CC} Active Erase/ Program Current (2, 3)	CE# = V_{IL}, OE# = V_{IH}, $V_{CC} = V_{CCmax}$			50	90	mA
I_{CC4}	V_{CC} Standby Current	CE#, RESET# = V_{CC} ± 0.3 V, OE# = V_{IH}, $V_{CC} = V_{CCmax}$ $V_{IL} = V_{SS}$ + 0.3 V/-0.1V,			1	5	µA
I_{CC5}	V_{CC} Reset Current	$V_{CC} = V_{CCmax}$; $V_{IL} = V_{SS}$ + 0.3 V/-0.1V, RESET# = V_{SS} ± 0.3 V			250	500	µA
I_{CC6}	Automatic Sleep Mode (4)	$V_{CC} = V_{CCmax}$, $V_{IH} = V_{CC}$ ± 0.3 V, $V_{IL} = V_{SS}$ + 0.3 V/-0.1V, WP#/ACC = V_{IH}			1	5	µA
I_{ACC}	ACC Accelerated Program Current	CE# = V_{IL}, OE# = V_{IH}, $V_{CC} = V_{CCmax}$, WP#/ACC = V_{HH}	WP#/ACC pin		10	20	mA
			V_{CC} pin		50	80	
V_{IL}	Input Low Voltage (5)			–0.1		0.3 x V_{IO}	V
V_{IH}	Input High Voltage (5)			0.7 x V_{IO}		V_{IO} + 0.3	V
V_{HH}	Voltage for Program Acceleration	V_{CC} = 2.7 –3.6 V		11.5		12.5	V
V_{ID}	Voltage for Autoselect and Temporary Sector Unprotect	V_{CC} = 2.7 –3.6 V		11.5		12.5	V
V_{OL}	Output Low Voltage (5)	I_{OL} = 100 µA				0.15 x V_{IO}	V
V_{OH}	Output High Voltage (5)	I_{OH} = -100 µA		0.85 x V_{IO}			V
V_{LKO}	Low V_{CC} Lock-Out Voltage (3)			2.3		2.5	V

Notes

1. *The I_{CC} current listed is typically less than 2 mA/MHz, with OE# at V_{IH}.*
2. *I_{CC} active while Embedded Erase or Embedded Program or Write Buffer Programming is in progress.*
3. *Not 100% tested.*
4. *Automatic sleep mode enables the lower power mode when addresses remain stable tor t_{ACC} + 30 ns.*
5. *V_{IO} = 1.65–3.6 V*
6. *V_{CC} = 3 V and V_{IO} = 3V or 1.8V. When V_{IO} is at 1.8V, I/O pins cannot operate at 3V.*

11.7 AC Characteristics

11.7.1 S29GL-P Read Operations

S29GL-P Read Operations

Parameter		Description (Notes)		Test Setup		Speed Options					Unit
JEDEC	Std.					90	100	110	120	130	
t_{AVAV}	t_{RC}	Read Cycle Time		$V_{IO} = V_{CC} = 2.7$ V	Min	–	100	110	120	–	ns
				$V_{IO} = 1.65$ V to V_{CC}, $V_{CC} = 3$ V		–	–	110	120	130	
				$V_{IO} = V_{CC} = 3.0$ V		90	100	110	–	–	
t_{AVQV}	t_{ACC}	Address to Output Delay (1)		$V_{IO} = V_{CC} = 2.7$ V	Max	–	100	110	120	–	ns
				$V_{IO} = 1.65$ V to V_{CC}, $V_{CC} = 3$ V		–	–	110	120	130	
				$V_{IO} = V_{CC} = 3.0$ V		90	100	110	–	–	
t_{ELQV}	t_{CE}	Chip Enable to Output Delay (2)		$V_{IO} = V_{CC} = 2.7$ V	Max	–	100	110	120	–	ns
				$V_{IO} = 1.65$ V to V_{CC}, $V_{CC} = 3$ V		–	–	110	120	130	
				$V_{IO} = V_{CC} = 3.0$ V		90	100	110	–	–	
	t_{PACC}	Page Access Time			Max	25					ns
t_{GLQV}	t_{OE}	Output Enable to Output Delay			Max	25					ns
t_{EHQZ}	t_{DF}	Chip Enable to Output High Z (3)			Max	20					ns
t_{GHQZ}	t_{DF}	Output Enable to Output High Z (3)			Max	20					ns
t_{AXQX}	t_{OH}	Output Hold Time From Addresses, CE# or OE#, Whichever Occurs First			Min	0					ns
	t_{OEH}	Output Enable Hold Time (3)	Read		Min	0					ns
			Toggle and Data# Polling		Min	10					ns
	t_{CEH}	Chip Enable Hold Time	Read		Min	35					ns

Notes

1. *CE#, OE# = V_{IL}*
2. *OE# = V_{IL}*
3. *Not 100% tested.*
4. *See Figure 11.3 and Table for test specifications.*
5. *Unless otherwise indicated, AC specifications for 110 ns speed options are tested with $V_{IO} = V_{CC} = 2.7$ V. AC specifications for 110 ns speed options are tested with $V_{IO} = 1.8$ V and $V_{CC} = 3.0$ V.*

Figure 11.5 Read Operation Timings

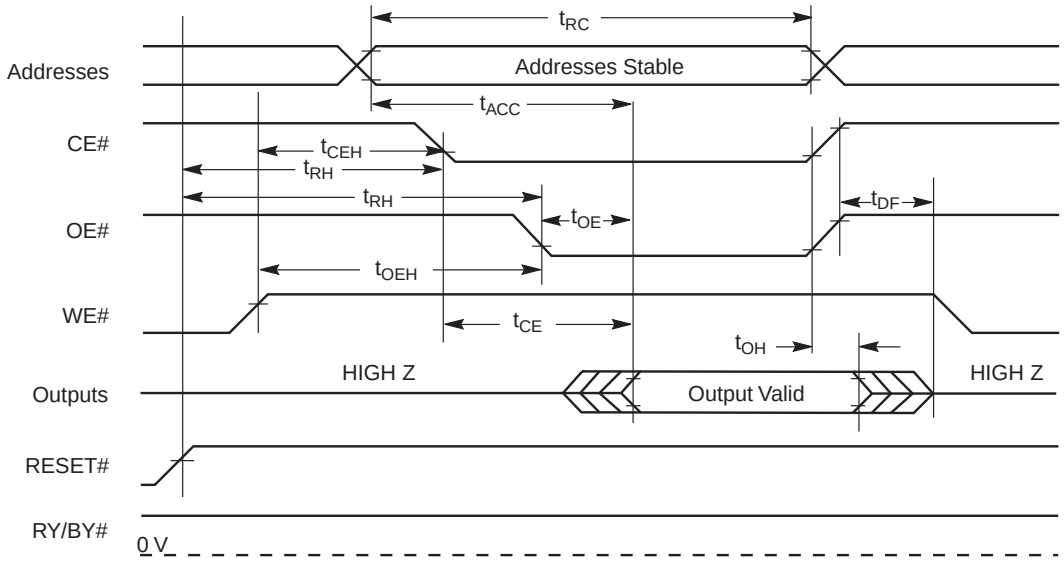

Note
For Figure 11.5, parameters t_{CEH} and t_{OEH} are specific to a read cycle following a flash write operation.

Figure 11.6 Page Read Timings

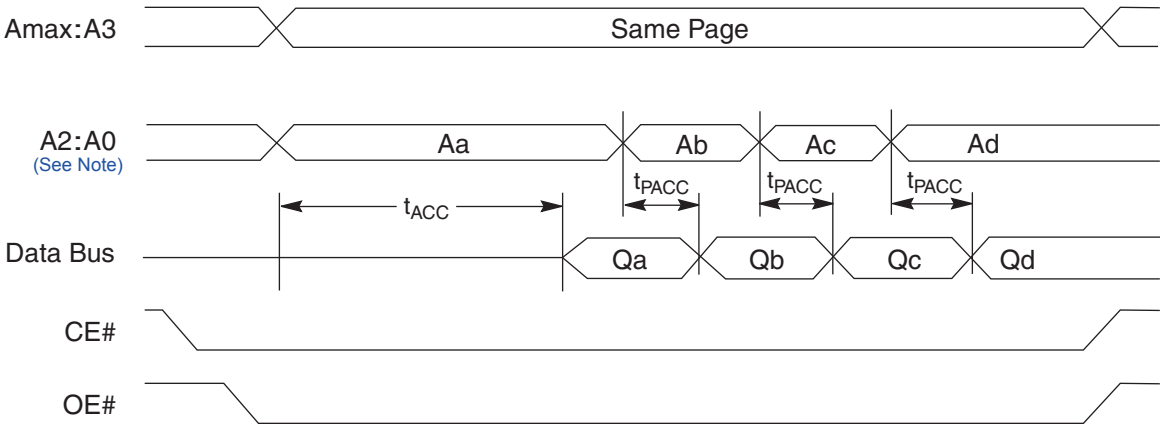

Note
Figure 11.6 shows word mode. Addresses are A2:A-1 for byte mode.

11.7.2 S29GL-P Hardware Reset (RESET#) Operation

Hardware Reset (RESET#)

Parameter		Description		Speed	Unit
JEDEC	Std.				
	t_{Ready}	RESET# Pin Low (During Embedded Algorithms) to Read Mode or Write mode	Min	35	µs
	t_{Ready}	RESET# Pin Low (NOT During Embedded Algorithms) to Read Mode or Write mode	Min	35	µs
	t_{RP}	RESET# Pulse Width	Min	35	µs
	t_{RH}	Reset High Time Before Read	Min	200	ns
	t_{RPD}	RESET# Low to Standby Mode	Min	10	µs
	t_{RB}	RY/BY# Recovery Time	Min	0	ns

Figure 11.7 Reset Timings

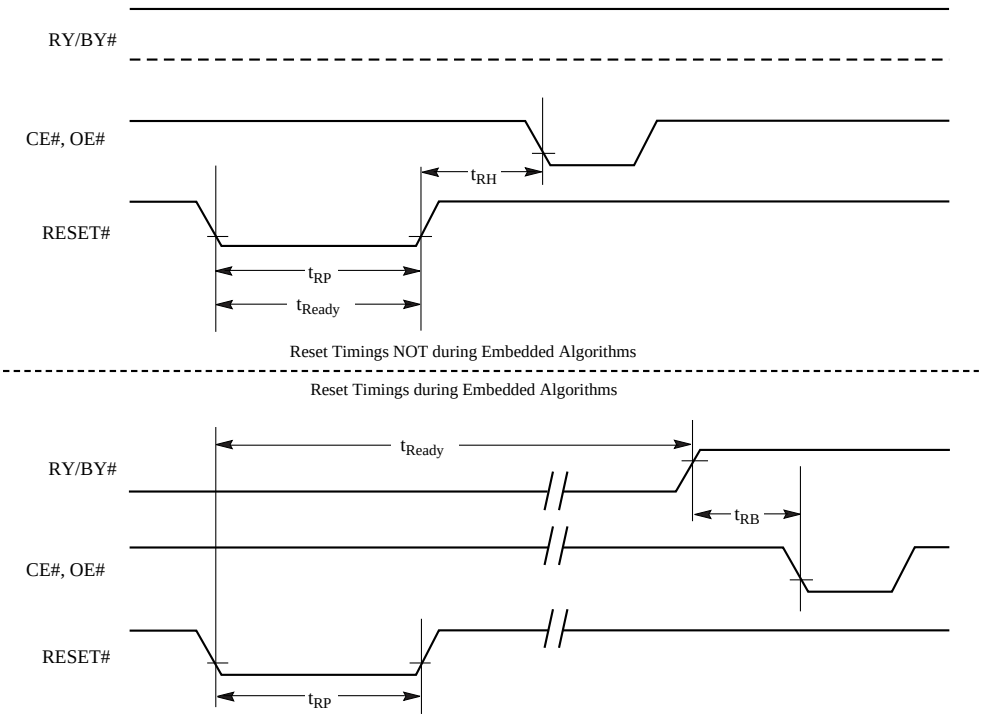

Power-up Sequence Timings

Parameter	Description		Speed	Unit
t_{VCS}	Reset Low Time from rising edge of V_{CC} (or last Reset pulse) to rising edge of RESET#	Min	35	µs
t_{VIOS}	Reset Low Time from rising edge of V_{IO} (or last Reset pulse) to rising edge of RESET#	Min	35	µs
t_{RH}	Reset High Time before Read	Min	200	ns

Notes

1. *V_{IO} < V_{CC} + 200 mV.*
2. *V_{IO} and V_{CC} ramp must be synchronized during power up.*
3. *If RESET# is not stable for t_{VCS} or t_{VIOS}:*
   The device does not permit any read and write operations.
   A valid read operation returns FFh.
   A hardware reset is required.
4. *V_{CC} maximum power-up current (RST=V_{IL}) is 20 mA.*

Figure 11.8 Power-up Sequence Timings

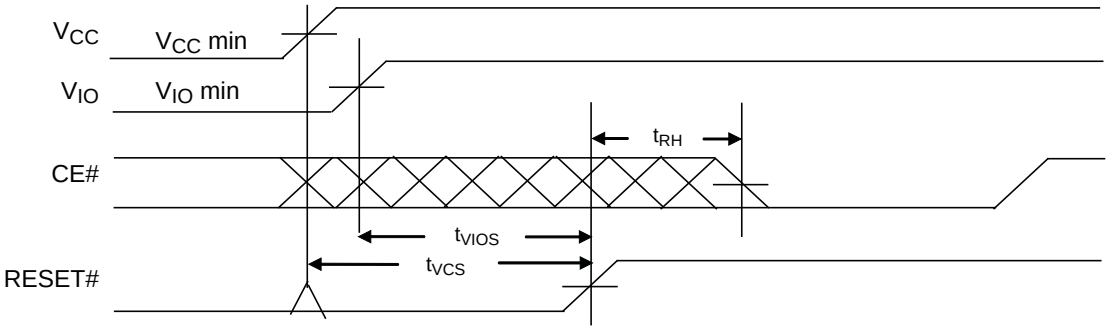

11.7.3 S29GL-P Erase and Program Operations

S29GL-P Erase and Program Operations

Parameter					Speed Options					
JEDEC	Std.	Description			90	100	110	120	130	Unit
t_{AVAV}	t_{WC}	Write Cycle Time (Note 1)		Min	90	100	110	120	130	ns
t_{AVWL}	t_{AS}	Address Setup Time		Min	0					ns
	t_{ASO}	Address Setup Time to OE# low during toggle bit polling		Min	15					ns
t_{WLAX}	t_{AH}	Address Hold Time		Min	45					ns
	t_{AHT}	Address Hold Time From CE# or OE# high during toggle bit polling		Min	0					ns
t_{DVWH}	t_{DS}	Data Setup Time		Min	30					ns
t_{WHDX}	t_{DH}	Data Hold Time		Min	0					ns
	t_{CEPH}	CE# High during toggle bit polling		Min	20					ns
	t_{OEPH}	Output Enable High during toggle bit polling		Min	20					ns
t_{ELWL}	t_{CS}	CE# Setup Time		Min	0					ns
t_{WHEH}	t_{CH}	CE# Hold Time		Min	0					ns
t_{WLWH}	t_{WP}	Write Pulse Width		Min	35					ns
t_{WHDL}	t_{WPH}	Write Pulse Width High		Min	30					ns
t_{WHWH1}	t_{WHWH1}	Write Buffer Program Operation (Notes 2, 3)		Typ	480					µs
		Effective Write Buffer Program Operation (Notes 2, 4)	Per Word	Typ	15					µs
		Accelerated Effective Write Buffer Program Operation (Notes 2, 4)	Per Word	Typ	13.5					µs
		Program Operation (Note 2)	Word	Typ	60					µs
		Accelerated Programming Operation (Note 2)	Word	Typ	54					µs
t_{WHWH2}	t_{WHWH2}	Sector Erase Operation (Note 2)		Typ	0.5					sec
	t_{VHH}	V_{HH} Rise and Fall Time (Note 1)		Min	250					ns
	t_{VCS}	V_{CC} Setup Time (Note 1)		Min	35					µs
	t_{BUSY}	Erase/Program Valid to RY/BY# Delay		Max	90					ns
	t_{SEA}	Sector Erase Timeout		Max	50					µs

Notes

1. *Not 100% tested.*
2. *See Section 11.6 for more information.*
3. *For 1–32 words/1–64 bytes programmed.*
4. *Effective write buffer specification is based upon a 32-word/64-byte write buffer operation.*
5. *Unless otherwise indicated, AC specifications for 110 ns speed option are tested with $V_{IO} = V_{CC} = 2.7$ V. AC specifications for 110 ns speed options are tested with $V_{IO} = 1.8$ V and $V_{CC} = 3.0$ V.*

Figure 11.9 Program Operation Timings

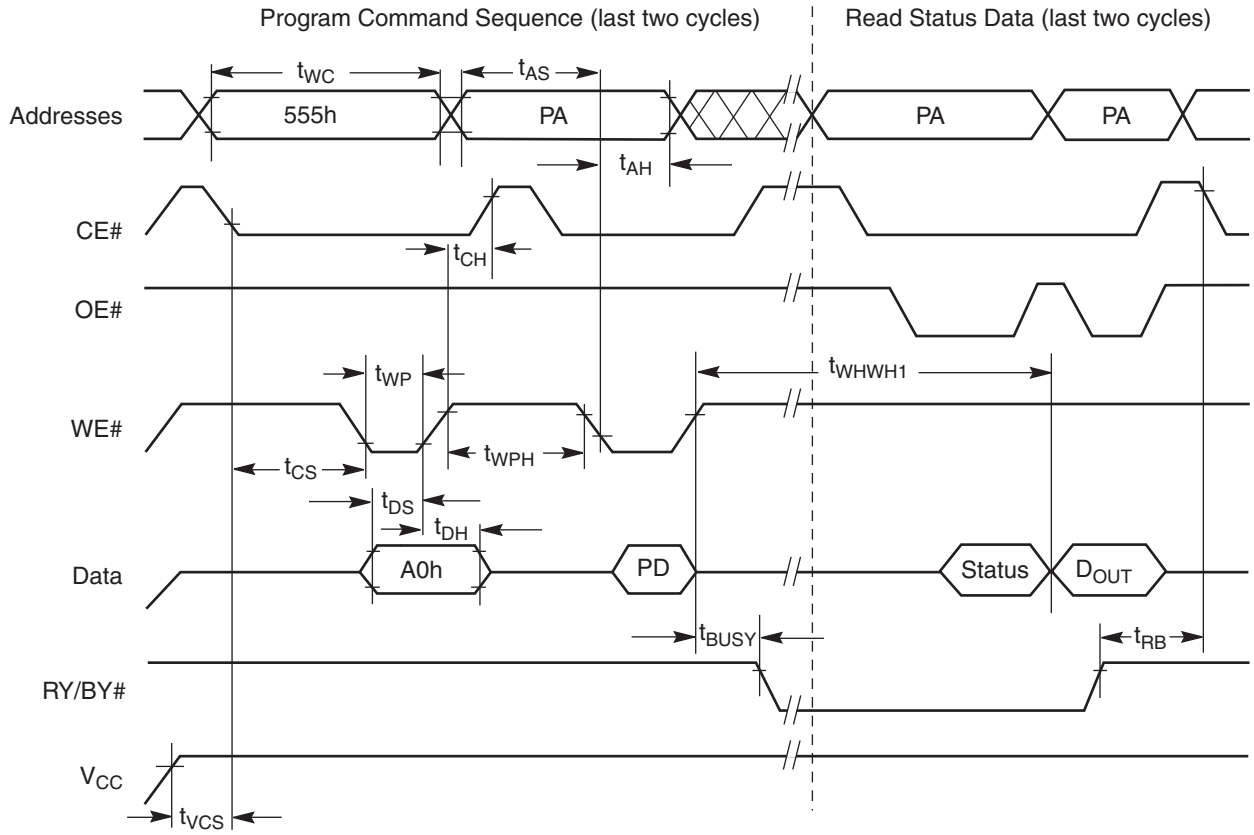

Notes

1. *PA = program address, PD = program data, D_{OUT} is the true data at the program address.*
2. *Illustration shows device in word mode.*

Figure 11.10 Accelerated Program Timing Diagram

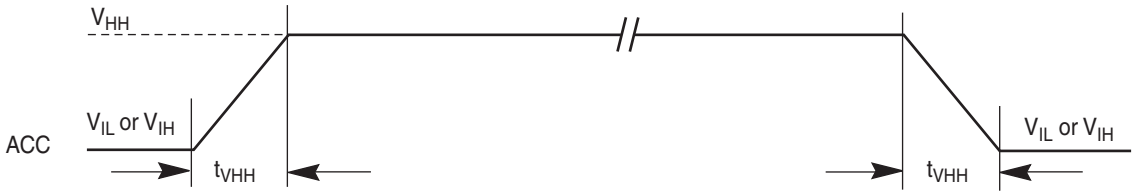

Notes

1. *Not 100% tested.*
2. *CE#, OE# = V_{IL}*
3. *OE# = V_{IL}*
4. *See Figure 11.3 and Table for test specifications.*

Figure 11.11 Chip/Sector Erase Operation Timings

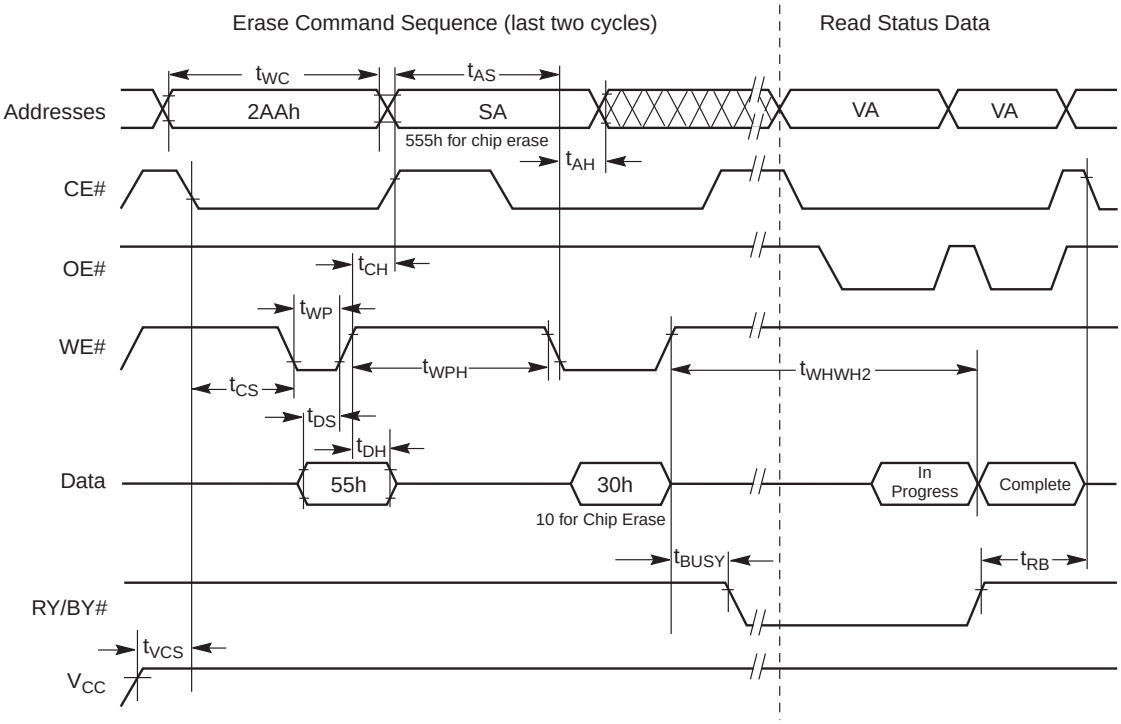

Notes

1. *SA = sector address (for Sector Erase), VA = Valid Address for reading status data (see Write Operation Status on page 32.)*
2. *These waveforms are for the word mode*

Figure 11.12 Data# Polling Timings (During Embedded Algorithms)

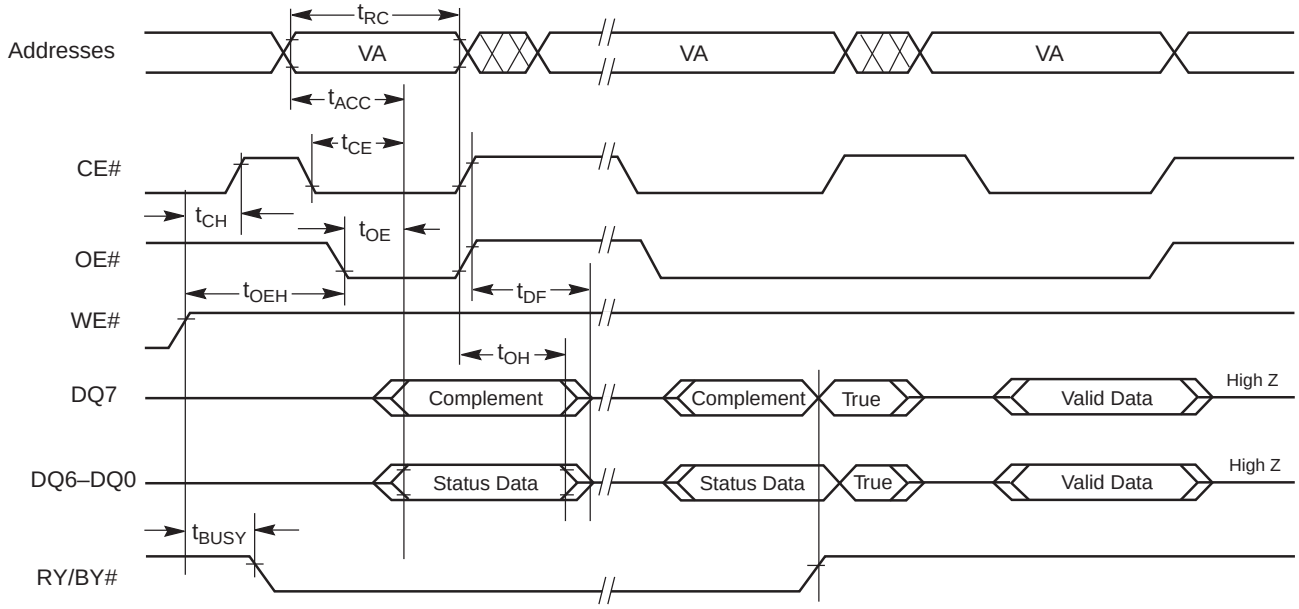

Notes

1. *VA = Valid address. Illustration shows first status cycle after command sequence, last status read cycle, and array data read cycle.*
2. *t_{OE} for data polling is 45 ns when V_{IO} = 1.65 to 2.7 V and is 35 ns when V_{IO} = 2.7 to 3.6 V*
3. *CE# does not need to go high between status bit reads*

Figure 11.13 Toggle Bit Timings (During Embedded Algorithms)

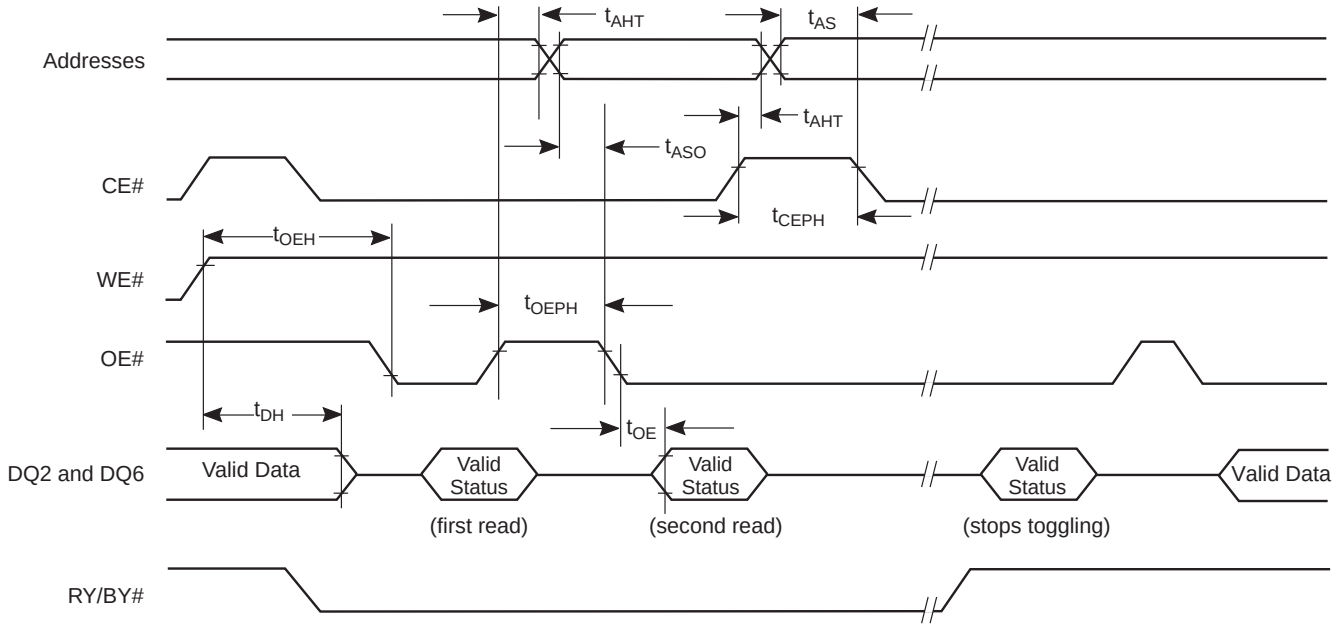

Note

A = Valid address; not required for DQ6. Illustration shows first two status cycle after command sequence, last status read cycle, and array data read cycle CE# does not need to go high between status bit reads

Figure 11.14 DQ2 vs. DQ6

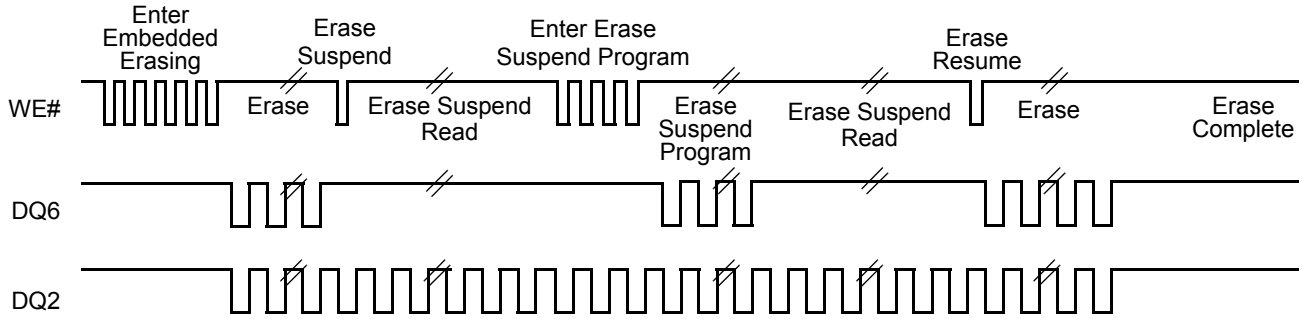

Note

DQ2 toggles only when read at an address within an erase-suspended sector. The system can use OE# or CE# to toggle DQ2 and DQ6.

11.7.4 S29GL-P Alternate CE# Controlled Erase and Program Operations

S29GL-P Alternate CE# Controlled Erase and Program Operations

Parameter		Description (Notes)			Speed Options					
JEDEC	Std.				90	100	110	120	130	Unit
t_{AVAV}	t_{WC}	Write Cycle Time (Note 1)		Min	90	100	110	120	130	ns
t_{AVWL}	t_{AS}	Address Setup Time		Min	0					ns
	t_{ASO}	Address Setup Time to OE# low during toggle bit polling		Min	15					ns
t_{ELAX}	t_{AH}	Address Hold Time		Min	45					ns
	t_{AHT}	Address Hold Time From CE# or OE# high during toggle bit polling		Min	0					ns
t_{DVEH}	t_{DS}	Data Setup Time		Min	30					ns
t_{EHDX}	t_{DH}	Data Hold Time		Min	0					ns
	t_{CEPH}	CE# High during toggle bit polling		Min	20					ns
	t_{OEPH}	OE# High during toggle bit polling		Min	20					ns
t_{GHEL}	t_{GHEL}	Read Recovery Time Before Write (OE# High to CE# Low)		Min	0					ns
t_{WLEL}	t_{WS}	WE# Setup Time		Min	0					ns
t_{EHWH}	t_{WH}	WE# Hold Time		Min	0					ns
t_{ELEH}	t_{CP}	CE# Pulse Width		Min	35					ns
t_{EHEL}	t_{CPH}	CE# Pulse Width High		Min	30					ns
t_{WHWH1}	t_{WHWH1}	Write Buffer Program Operation (Notes 2, 3)		Typ	480					µs
		Effective Write Buffer Program Operation (Notes 2, 4)	Per Word	Typ	15					µs
		Effective Accelerated Write Buffer Program Operation (Notes 2, 4)	Per Word	Typ	13.5					µs
		Program Operation (Note 2)	Word	Typ	60					µs
		Accelerated Programming Operation (Note 2)	Word	Typ	54					µs
t_{WHWH2}	t_{WHWH2}	Sector Erase Operation (Note 2)		Typ	0.5					sec

Notes

1. *Not 100% tested.*
2. *See DC Characteristics on page 52 for more information.*
3. *For 1–32 words/1–64 bytes programmed.*
4. *Effective write buffer specification is based upon a 32-word/64-byte write buffer operation.*
5. *Unless otherwise indicated, AC specifications are tested with V_{IO} = 1.8 V and V_{CC} = 3.0 V.*

Figure 11.15 Alternate CE# Controlled Write (Erase/Program) Operation Timings

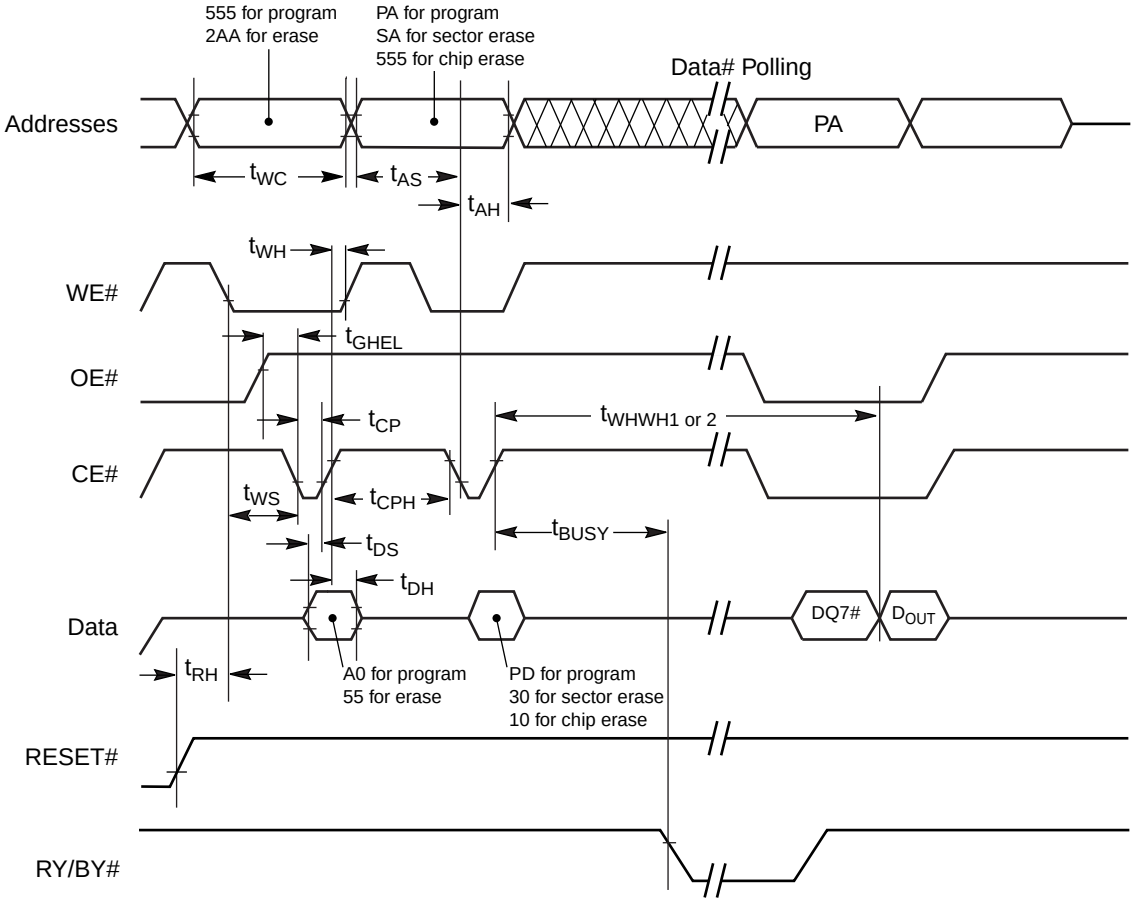

Notes

1. *Figure 11.15 indicates last two bus cycles of a program or erase operation.*
2. *PA = program address, SA = sector address, PD = program data.*
3. *DQ7# is the complement of the data written to the device. D_{OUT} is the data written to the device.*
4. *Waveforms are for the word mode.*

11.7.5 Erase And Programming Performance

Erase And Programming Performance

Parameter		Typ (Note 1)	Max (Note 2)	Unit	Comments
Sector Erase Time		0.5	3.5	sec	Excludes 00h programming prior to erasure (Note 4)
Chip Erase Time	S29GL128P	64	256	sec	
	S29GL256P	128	512		
	S29GL512P	256	1024		
	S29GL01GP	512	2048		
Total Write Buffer Time (Note 3)		480		µs	Excludes system level overhead (Note 5)
Total Accelerated Write Buffer Programming Time (Note 3)		432		µs	
Chip Program Time	S29GL128P	123		sec	
	S29GL256P	246			
	S29GL512P	492			
	S29GL01GP	984			

Notes

1. *Typical program and erase times assume the following conditions: 25°C, 3.6 V V_{CC}, 10,000 cycles, checkerboard pattern.*
2. *Under worst case conditions of -40°C, V_{CC} = 3.0 V, 100,000 cycles.*
3. *Effective write buffer specification is based upon a 32-word write buffer operation.*
4. *In the pre-programming step of the Embedded Erase algorithm, all bits are programmed to 00h before erasure.*
5. *System-level overhead is the time required to execute the two- or four-bus-cycle sequence for the program command. See Tables –.*

11.7.6 TSOP Pin and BGA Package Capacitance

Package Capacitance

Parameter Symbol	Parameter Description	Test Setup	Typ	Max	Unit
C_{IN}	Input Capacitance	V_{IN} = 0	6	10	pF
C_{OUT}	Output Capacitance	V_{OUT} = 0	10	12	pF
C_{IN2}	Control Pin Capacitance	V_{IN} = 0	8	10	pF
WP#/ACC	Separated Control Pin	V_{IN} = 0	42	45	pF
RESET#	Separated Control Pin	V_{IN} = 0	25	28	pF
CE#	Separated Control Pin	V_{IN} = 0	22	25	pF

Notes

1. *Sampled, not 100% tested.*
2. *Test conditions T_A = 25°C, f = 100 MHz.*

12. Appendix

This section contains information relating to software control or interfacing with the Flash device. For additional information and assistance regarding software, see Section 5. For the latest information, explore the Cypress web site at www.cypress.com.

12.1 Command Definitions

Writing specific address and data commands or sequences into the command register initiates device operations. Tables – define the valid register command sequences. *Writing incorrect address and data values or writing them in the improper sequence can place the device in an unknown state.* A reset command is then required to return the device to reading array data.

S29GL-P Memory Array Command Definitions, x16

Command (Notes)		Cycles	Bus Cycles (Notes 1–5)											
			First		Second		Third		Fourth		Fifth		Sixth	
			Addr	Data	Addr	Data	Addr	Data	Addr	Data	Addr	Data	Addr	Data
Read (6)		1	RA	RD										
Reset (7)		1	XXX	F0										
Autoselect (8,9)	Manufacturer ID	4	555	AA	2AA	55	555	90	X00	01				
	Device ID (8)	6	555	AA	2AA	55	555	90	X01	227E	X0E	(8)	X0F	(8)
	Sector Protect Verify (10)	4	555	AA	2AA	55	555	90	[SA]X 02	(10)				
	Secure Device Verify (11)	4	555	AA	2AA	55	555	90	X03	(11)				
CFI Query (12)		1	55	98										
Program		4	555	AA	2AA	55	555	A0	PA	PD				
Write to Buffer (13)		6	555	AA	2AA	55	SA	25	SA	WC	WBL	PD	WBL	PD
Program Buffer to Flash (Confirm)		1	SA	29										
Write-to-Buffer-Abort Reset (14)		3	555	AA	2AA	55	555	F0						
Unlock Bypass	Enter	3	555	AA	2AA	55	555	20						
	Program (15)	2	XXX	A0	PA	PD								
	Sector Erase (15)	2	XXX	80	SA	30								
	Chip Erase (15)	2	XXX	80	XXX	10								
	Reset (16)	2	XXX	90	XXX	00								
Chip Erase		6	555	AA	2AA	55	555	80	555	AA	2AA	55	555	10
Sector Erase		6	555	AA	2AA	55	555	80	555	AA	2AA	55	SA	30
Erase Suspend/Program Suspend (17)		1	XXX	B0										
Erase Resume/Program Resume (18)		1	XXX	30										
Secured Silicon Sector Entry		3	555	AA	2AA	55	555	88						
Secured Silicon Sector Exit (19)		4	555	AA	2AA	55	555	90	XX	00				

Legend

X = Don't care
RA = Address of the memory to be read.
RD = Data read from location RA during read operation.
PA = Address of the memory location to be programmed. Addresses latch on the falling edge of the WE# or CE# pulse, whichever happens later.
PD = Data to be programmed at location PA. Data latches on the rising edge of the WE# or CE# pulse, whichever happens first.
SA = Address of the sector to be verified (in autoselect mode) or erased. Address bits A_{max}–A16 uniquely select any sector.
WBL = Write Buffer Location. The address must be within the same write buffer page as PA.
WC = Word Count is the number of write buffer locations to load minus 1.

Notes

1. *See Table on page 15 for description of bus operations.*
2. *All values are in hexadecimal.*
3. *All bus cycles are write cycles unless otherwise noted.*
4. *Data bits DQ15-DQ8 are don't cares for unlock and command cycles.*
5. *Address bits A_{MAX}:A16 are don't cares for unlock and command cycles, unless SA or PA required. (A_{MAX} is the Highest Address pin.).*
6. *No unlock or command cycles required when reading array data.*
7. *The Reset command is required to return to reading array data when device is in the autoselect mode, or if DQ5 goes high (while the device is providing status data).*
8. *See Table on page 18 for device ID values and definitions.*
9. *The fourth, fifth, and sixth cycles of the autoselect command sequence are read cycles.*
10. *The data is 00h for an unprotected sector and 01h for a protected sector. See Autoselect on page 17 for more information. This is same as PPB Status Read except that the protect and unprotect statuses are inverted here.*
11. *The data value for DQ7 is "1" for a serialized, protected Secured Silicon Sector region and "0" for an unserialized, unprotected region. See Table on page 18 for data and definitions.*
12. *Command is valid when device is ready to read array data or when device is in autoselect mode.*
13. *Depending on the number of words written, the total number of cycles may be from 6 to 37.*
14. *Command sequence returns device to reading array after being placed in a Write-to-Buffer-Abort state. Full command sequence is required if resetting out of abort while in Unlock Bypass mode.*
15. *The Unlock-Bypass command is required prior to the Unlock-Bypass-Program command.*
16. *The Unlock-Bypass-Reset command is required to return to reading array data when the device is in the unlock bypass mode.*
17. *The system can read and program/program suspend in non-erasing sectors, or enter the autoselect mode, when in the Erase Suspend mode. The Erase Suspend command is valid only during a sector erase operation.*
18. *The Erase Resume/Program Resume command is valid only during the Erase Suspend/Program Suspend modes.*
19. *The Exit command returns the device to reading the array.*

S29GL-P Sector Protection Command Definitions, x16

	Command (Notes)	Cycles	Bus Cycles (Notes 1–5)											
			First/ Seventh		Second		Third		Fourth		Fifth		Sixth	
			Addr	Data	Addr	Data	Addr	Data	Addr	Data	Addr	Data	Addr	Data
Lock Register	Command Set Entry	3	555	AA	2AA	55	555	40						
	Program (6)	2	XXX	A0	XXX	DATA								
	Read (6)	1	00	RD										
	Command Set Exit (7, 8)	2	XXX	90	XXX	00								
Password Protection	Command Set Entry	3	555	AA	2AA	55	555	60						
	Password Program (9)	2	XXX	A0	PWA x	PWD x								
	Password Read (10)	4	00	PWD 0	01	PWD 1	02	PWD 2	03	PWD 3				
	Password Unlock (10)	7	00	25	00	03	00	PWD 0	01	PWD 1	02	PWD 2	03	PWD 3
			00	29										
	Command Set Exit (7, 8)	2	XXX	90	XXX	00								
Global Non-Volatile	PPB Command Set Entry	3	555	AA	2AA	55	555	C0						
	PPB Program (11, 12)	2	XXX	A0	SA	00								
	All PPB Erase (13)	2	XXX	80	00	30								
	PPB Status Read (12)	1	SA	RD (0)										
	PPB Command Set Exit (7, 8)	2	XXX	90	XXX	00								
Global Volatile Freeze	PPB Lock Command Set Entry	3	555	AA	2AA	55	555	50						
	PPB Lock Set (12)	2	XXX	A0	XXX	00								
	PPB Lock Status Read (12)	1	XXX	RD (0)										
	PPB Lock Command Set Exit (7, 8)	2	XXX	90	XXX	00								
Volatile	DYB Command Set Entry	3	555	AA	2AA	55	555	E0						
	DYB Set (11, 12)	2	XXX	A0	SA	00								
	DYB Clear (12)	2	XXX	A0	SA	01								
	DYB Status Read (12)	1	SA	RD (0)										
	DYB Command Set Exit (7, 8)	2	XXX	90	XXX	00								

Legend

X = Don't care
RD(0) = Read data.
SA = Sector Address. Address bits A_{max}–A16 uniquely select any sector.
PWD = Password
PWD_x = Password word0, word1, word2, and word3.
Data = Lock Register Contents: PD(0) = Secured Silicon Sector Protection Bit, PD(1) = Persistent Protection Mode Lock Bit, PD(2) = Password Protection Mode Lock Bit.

Notes

1. *See Table on page 15 for description of bus operations.*
2. *All values are in hexadecimal.*
3. *All bus cycles are write cycles unless otherwise noted.*
4. *Data bits DQ15-DQ8 are don't cares for unlock and command cycles.*
5. *Address bits A_{MAX}:A16 are don't cares for unlock and command cycles, unless SA or PA required. (A_{MAX} is the Highest Address pin.)*
6. *All Lock Register bits are one-time programmable. Program state = "0" and the erase state = "1." The Persistent Protection Mode Lock Bit and the Password Protection Mode Lock Bit cannot be programmed at the same time or the Lock Register Bits Program operation aborts and returns the device to read mode. Lock Register bits that are reserved for future use default to "1's." The Lock Register is shipped out as "FFFF's" before Lock Register Bit program execution.*
7. *The Exit command returns the device to reading the array.*
8. *If any Command Set Entry command was written, an Exit command must be issued to reset the device into read mode.*
9. *For PWDx, only one portion of the password can be programmed per each "A0" command.*
10. *Note that the password portion can be entered or read in any order as long as the entire 64-bit password is entered or read.*
11. *If ACC = V_{HH}, sector protection matches when ACC = V_{IH}.*
12. *Protected State = "00h," Unprotected State = "01h."*
13. *The All PPB Erase command embeds programming of all PPB bits before erasure.*

S29GL-P Memory Array Command Definitions, x8

Command (Notes)		Cycles	Bus Cycles (Notes 1–5)											
			First		Second		Third		Fourth		Fifth		Sixth	
			Addr	Data	Addr	Data	Addr	Data	Addr	Data	Addr	Data	Addr	Data
Read (6)		1	RA	RD										
Reset (7)		1	XXX	F0										
Autoselect (8,9)	Manufacturer ID	4	AAA	AA	555	55	AAA	90	X00	01				
	Device ID (8)	6	AAA	AA	555	55	AAA	90	X02	XX7E	X1C	(8)	X1E	(8)
	Sector Protect Verify (10)	4	AAA	AA	555	55	AAA	90	[SA]X04	(10)				
	Secure Device Verify (11)	4	AAA	AA	555	55	AAA	90	X06	(11)				
CFI Query (12)		1	AA	98										
Program		4	AAA	AA	555	55	AAA	A0	PA	PD				
Write to Buffer (13)		6	AAA	AA	555	55	SA	25	SA	WC	WBL	PD	WBL	PD
Program Buffer to Flash (confirm)		1	SA	29										
Write-to-Buffer-Abort Reset (14)		3	AAA	AA	555	55	AAA	F0						
Unlock Bypass	Enter	3	AAA	AA	555	55	AAA	20						
	Program (15)	2	XXX	A0	PA	PD								
	Sector Erase (15)	2	XXX	80	SA	30								
	Chip Erase (15)	2	XXX	80	XXX	10								
	Reset (16)	2	XXX	90	XXX	00								
Chip Erase		6	AAA	AA	555	55	AAA	80	AAA	AA	555	55	AAA	10
Sector Erase		6	AAA	AA	555	55	AAA	80	AAA	AA	555	55	SA	30
Erase Suspend/Program Suspend (17)		1	XXX	B0										
Erase Resume/Program Resume (18)		1	XXX	30										
Secured Silicon Sector Entry		3	AAA	AA	555	55	AAA	88						
Secured Silicon Sector Exit (19)		4	AAA	AA	555	55	AAA	90	XX	00				

Legend

X = Don't care

RA = Address of the memory to be read.

RD = Data read from location RA during read operation.

PA = Address of the memory location to be programmed. Addresses latch on the falling edge of the WE# or CE# pulse, whichever happens later.

PD = Data to be programmed at location PA. Data latches on the rising edge of the WE# or CE# pulse, whichever happens first.

SA = Address of the sector to be verified (in autoselect mode) or erased. Address bits A_{max}–A16 uniquely select any sector.

WBL = Write Buffer Location. The address must be within the same write buffer page as PA.

WC = Word Count is the number of write buffer locations to load minus 1.

Notes

1. *See Table on page 15 for description of bus operations.*
2. *All values are in hexadecimal.*
3. *All bus cycles are write cycles unless otherwise noted.*
4. *Data bits DQ15-DQ8 are don't cares for unlock and command cycles.*
5. *Address bits A_{MAX}:A16 are don't cares for unlock and command cycles, unless SA or PA required. (A_{MAX} is the Highest Address pin.).*
6. *No unlock or command cycles required when reading array data.*
7. *The Reset command is required to return to reading array data when device is in the autoselect mode, or if DQ5 goes high (while the device is providing status data).*
8. *See Table on page 18 for device ID values and definitions.*
9. *The fourth, fifth, and sixth cycles of the autoselect command sequence are read cycles.*
10. *The data is 00h for an unprotected sector and 01h for a protected sector. See Autoselect on page 17 for more information. This is same as PPB Status Read except that the protect and unprotect statuses are inverted here.*
11. *The data value for DQ7 is "1" for a serialized, protected Secured Silicon Sector region and "0" for an unserialized, unprotected region. See Table on page 18 for data and definitions.*
12. *Command is valid when device is ready to read array data or when device is in autoselect mode.*
13. *Depending on the number of words written, the total number of cycles may be from 6 to 69.*
14. *Command sequence returns device to reading array after being placed in a Write-to-Buffer-Abort state. Full command sequence is required if resetting out of abort while in Unlock Bypass mode.*
15. *The Unlock-Bypass command is required prior to the Unlock-Bypass-Program command.*
16. *The Unlock-Bypass-Reset command is required to return to reading array data when the device is in the unlock bypass mode.*
17. *The system can read and program/program suspend in non-erasing sectors, or enter the autoselect mode, when in the Erase Suspend mode. The Erase Suspend command is valid only during a sector erase operation.*
18. *The Erase Resume/Program Resume command is valid only during the Erase Suspend/Program Suspend modes.*
19. *The Exit command returns the device to reading the array.*

S29GL-P Sector Protection Command Definitions, x8

	Command (Notes)	Cycles	Bus Cycles (Notes 1–5)											
			First/ Seventh		Second/ Eighth		Third		Fourth		Fifth		Sixth	
			Addr	Data	Addr	Data	Addr	Data	Addr	Data	Addr	Data	Addr	Data
Lock Register	Command Set Entry	3	AAA	AA	555	55	AAA	40						
	Bits Program (6)	2	XXX	A0	XXX	DATA								
	Read (6)	1	00	RD										
	Command Set Exit (7, 8)	2	XXX	90	XXX	00								
Password Protection	Command Set Entry	3	AAA	AA	555	55	AAA	60						
	Password Program (9)	2	XXX	A0	PWAx	PWDx								
	Password Read (10)	8	00	PWD0	01	PWD1	02	PWD2	03	PWD3	04	PWD4	05	PWD5
			06	PWD6	07	PWD7								
	Password Unlock (10)	11	00	25	00	03	00	PWD0	01	PWD1	02	PWD2	03	PWD3
			04	PWD4	05	PWD5	06	PWD6	07	PWD7	00	29		
	Command Set Exit (7, 8)	2	XXX	90	XXX	00								
Global	PPB Command Set Entry	3	AAA	AA	55	55	AAA	C0						
	PPB Program (11, 12)	2	XXX	A0	SA	00								
	All PPB Erase (13)	2	XXX	80	00	30								
	PPB Status Read (12)	1	SA	RD(0)										
	PPB Command Set Exit (7, 8)	2	XXX	90	XXX	00								
Global	PPB Lock Command Set Entry	3	AAA	AA	555	55	AAA	50						
	PPB Lock Bit Set (12)	2	XXX	A0	XXX	00								
	PPB Lock Status Read (12)	1	XXX	RD(0)										
	PPB Lock Command Set Exit (7, 8)	2	XXX	90	XXX	00								
Volatile	DYB Command Set Entry	3	AAA	AA	555	55	AAA	E0						
	DYB Set (11, 12)	2	XXX	A0	SA	00								
	DYB Clear (12)	2	XXX	A0	SA	01								
	DYB Status Read (12)	1	SA	RD(0)										
	DYB Command Set Exit (7, 8)	2	XXX	90	XXX	00								

Legend

X = Don't care

RD(0) = Read data.

SA = Sector Address. Address bits A_{max}–A16 uniquely select any sector.

PWD = Password

PWD_x = Password word0, word1, word2, and word3.

Data = Lock Register Contents: PD(0) = Secured Silicon Sector Protection Bit, PD(1) = Persistent Protection Mode Lock Bit, PD(2) = Password Protection Mode Lock Bit.

Notes

1. *See Table on page 15 for description of bus operations.*
2. *All values are in hexadecimal.*
3. *All bus cycles are write cycles unless otherwise noted.*
4. *Data bits DQ15-DQ8 are don't cares for unlock and command cycles.*
5. *Address bits A_{MAX}:A16 are don't cares for unlock and command cycles, unless SA or PA required. (A_{MAX} is the Highest Address pin.)*
6. *All Lock Register bits are one-time programmable. Program state = "0" and the erase state = "1." The Persistent Protection Mode Lock Bit and the Password Protection Mode Lock Bit cannot be programmed at the same time or the Lock Register Bits Program operation aborts and returns the device to read mode. Lock Register bits that are reserved for future use default to "1's." The Lock Register is shipped out as "FFFF's" before Lock Register Bit program execution.*
7. *The Exit command returns the device to reading the array.*
8. *If any Command Set Entry command was written, an Exit command must be issued to reset the device into read mode.*
9. *For PWDx, only one portion of the password can be programmed per each "A0" command.*
10. *Note that the password portion can be entered or read in any order as long as the entire 64-bit password is entered or read.*
11. *If ACC = V_{HH}, sector protection matches when ACC = V_{IH}.*
12. *Protected State = "00h," Unprotected State = "01h."*
13. *The All PPB Erase command embeds programming of all PPB bits before erasure.*

12.2 Common Flash Memory Interface

The Common Flash Interface (CFI) specification outlines device and host system software interrogation handshake, which allows specific vendor-specified software algorithms to be used for entire families of devices. Software support can then be device-independent, JEDEC ID-independent, and forward- and back-ward-compatible for the specified flash device families. Flash vendors can standardize their existing interfaces for long-term compatibility.

This device enters the CFI Query mode when the system writes the CFI Query command, 98h, to address 55h any time the device is ready to read array data. The system can read CFI information at the addresses given in Tables –). All reads outside of the CFI address range, returns non-valid data. Reads from other sectors are allowed, writes are not. To terminate reading CFI data, the system must write the reset command.

The system can also write the CFI query command when the device is in the autoselect mode. The device enters the CFI query mode, and the system can read CFI data at the addresses given in Tables –. The system must write the reset command to return the device to reading array data.

The following is a C source code example of using the CFI Entry and Exit functions. Refer to the *Cypress Low Level Driver User's Guide* (available on www.cypress.com) for general information on Cypress Flash memory software development guidelines.

```
/* Example: CFI Entry command */
  *( (UINT16 *)base_addr + 0x55 ) = 0x0098;   /* write CFI entry command         */

/* Example: CFI Exit command  */
  *( (UINT16 *)base_addr + 0x000 ) = 0x00F0;   /* write cfi exit command          */
```

For further information, please refer to the CFI Specification (see JEDEC publications JEP137-A and JESD68.01and CFI Publication 100). Please contact your sales office for copies of these documents.

CFI Query Identification String

Addresses (x16)	Addresses (x8)	Data	Description
10h 11h 12h	20h 22h 24h	0051h 0052h 0059h	Query Unique ASCII string "QRY"
13h 14h	26h 28h	0002h 0000h	Primary OEM Command Set
15h 16h	2Ah 2Ch	0040h 0000h	Address for Primary Extended Table
17h 18h	2Eh 30h	0000h 0000h	Alternate OEM Command Set (00h = none exists)
19h 1Ah	32h 34h	0000h 0000h	Address for Alternate OEM Extended Table (00h = none exists)

System Interface String

Addresses (x16)	Addresses (x8)	Data	Description
1Bh	36h	0027h	V_{CC} Min. (write/erase) D7–D4: volt, D3–D0: 100 mV
1Ch	38h	0036h	V_{CC} Max. (write/erase) D7–D4: volt, D3–D0: 100 mV
1Dh	3Ah	0000h	V_{PP} Min. voltage (00h = no V_{PP} pin present)
1Eh	3Ch	0000h	V_{PP} Max. voltage (00h = no V_{PP} pin present)
1Fh	3Eh	0006h	Typical timeout per single byte/word write 2^N µs
20h	40h	0006h	Typical timeout for buffer write 2^N µs (00h = not supported)
21h	42h	0009h	Typical timeout per individual block erase 2^N ms
22h	44h	0013h = 1 Gb 0012h = 512 Mb 0011h = 256 Mb 0010h = 128 Mb	Typical timeout for full chip erase 2^N ms (00h = not supported)
23h	46h	0003h	Max. timeout for byte/word write 2^N times typical
24h	48h	0005h	Max. timeout for buffer write 2^N times typical
25h	4Ah	0003h	Max. timeout per individual block erase 2^N times typical
26h	4Ch	0002h	Max. timeout for full chip erase 2^N times typical (00h = not supported)

Device Geometry Definition

Addresses (x16)	Addresses (x8)	Data	Description
27h	4Eh	001Bh 001Ah 0019h 0018h	Device Size = 2^N byte 1B = 1 Gb, 1A= 512 Mb, 19 = 256 Mb, 18 = 128 Mb
28h 29h	50h 52h	0002h 0000h	Flash Device Interface description (refer to CFI publication 100)
2Ah 2Bh	54h 56h	0006h 0000h	Max. number of byte in multi-byte write = 2^N (00h = not supported)
2Ch	58h	0001h	Number of Erase Block Regions within device (01h = uniform device, 02h = boot device)
2Dh 2Eh 2Fh 30h	5Ah 5Ch 5Eh 60h	00xxh 000xh 0000h 000xh	Erase Block Region 1 Information (refer to the CFI specification or CFI publication 100) 00FFh, 0003h, 0000h, 0002h =1 Gb 00FFh, 0001h, 0000h, 0002h = 512 Mb 00FFh, 0000h, 0000h, 0002h = 256 Mb 007Fh, 0000h, 0000h, 0002h = 128 Mb
31h 32h 33h 34h	62h 64h 66h 68h	0000h 0000h 0000h 0000h	Erase Block Region 2 Information (refer to CFI publication 100)
35h 36h 37h 38h	6Ah 6Ch 6Eh 70h	0000h 0000h 0000h 0000h	Erase Block Region 3 Information (refer to CFI publication 100)
39h 3Ah 3Bh 3Ch	72h 74h 76h 78h	0000h 0000h 0000h 0000h	Erase Block Region 4 Information (refer to CFI publication 100)

Primary Vendor-Specific Extended Query

Addresses (x16)	Addresses (x8)	Data	Description
40h 41h 42h	80h 82h 84h	0050h 0052h 0049h	Query-unique ASCII string “PRI”
43h	86h	0031h	Major version number, ASCII
44h	88h	0033h	Minor version number, ASCII
45h	8Ah	0014h	Address Sensitive Unlock (Bits 1-0) 0 = Required, 1 = Not Required Process Technology (Bits 7-2) 0101b = 90 nm MirrorBit
46h	8Ch	0002h	Erase Suspend 0 = Not Supported, 1 = To Read Only, 2 = To Read & Write
47h	8Eh	0001h	Sector Protect 0 = Not Supported, X = Number of sectors in per group
48h	90h	0000h	Sector Temporary Unprotect 00 = Not Supported, 01 = Supported
49h	92h	0008h	Sector Protect/Unprotect scheme 0008h = Advanced Sector Protection
4Ah	94h	0000h	Simultaneous Operation 00 = Not Supported, X = Number of Sectors
4Bh	96h	0000h	Burst Mode Type 00 = Not Supported, 01 = Supported
4Ch	98h	0002h	Page Mode Type 00 = Not Supported, 01 = 4 Word Page, 02 = 8 Word Page
4Dh	9Ah	00B5h	ACC (Acceleration) Supply Minimum 00h = Not Supported, D7-D4: Volt, D3-D0: 100 mV
4Eh	9Ch	00C5h	ACC (Acceleration) Supply Maximum 00h = Not Supported, D7-D4: Volt, D3-D0: 100 mV
4Fh	9Eh	00xxh	WP# Protection 04h = Uniform sectors bottom WP# protect, 05h = Uniform sectors top WP# protect
50h	A0h	0001h	Program Suspend 00h = Not Supported, 01h = Supported

13. Advance Information on S29GL-S Eclipse 65 nm MirrorBit Power-On and Warm Reset Timing

At power on, the flash requires additional time in the reset state to self configure than it does during a warm reset. Table and Figure 13.1 and Figure 13.2 detail the power on and warm reset timing requirements for the GL-P, and GL-S flash.

Power On and Warm Reset Timing Requirements

Parameter	Description	Type	GL-P	GL-S
Power on Reset				
t_{VCS}	V_{CC} Setup Time to first access	min	35 µs	300 µs
t_{VIOS}	V_{IO} Setup Time to first access	min	35 µs	300 µs
t_{RPH}	RESET# Low to CE# Low	min	35 µs	35 µs
t_{RP}	RESET# Low to RESET# High	min	35 µs	200 ns (2)
t_{RH}	RESET# High to CE# Low	min	200 ns	50 ns (2)
t_{CEH}	CE# High to CE# Low	min	N/A	20 ns
Warm Reset				
t_{RPH}	RESET# Low to CE# Low	min	35 µs	35 µs
t_{RP}	RESET# Low to RESET# High	min	35 µs	200 ns (2)
t_{RH}	RESET# High to CE# Low	min	200 ns	50 ns (2)
t_{CEH}	CE# High to CE# Low	min	N/A	20 ns

Notes:

1. *N/A = Not Applicable.*
2. *For GL-S, t_{RP} + t_{RH} must not be less than t_{RPH}.*

Figure 13.1 Power-Up Reset Timing

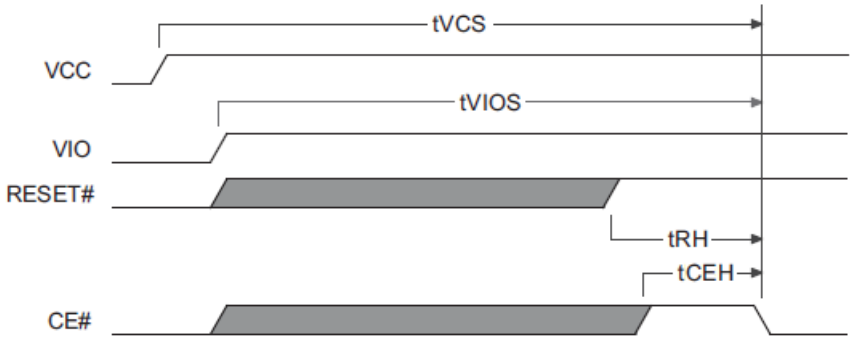

Note:
The sum of t_{RP} and t_{RH} must be equal to or greater than t_{RPH}.

Figure 13.2 Warm Reset Timing

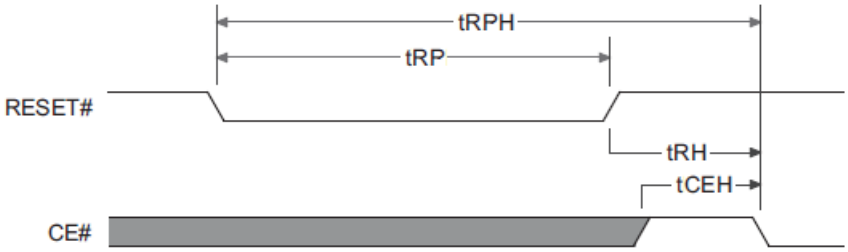

Note:
The sum of t_{RP} and t_{RH} must be equal to or greater than t_{RPH}.

The differences in power-on timing should not present a migration challenge for most applications where the flash interfaces directly with a Host that requires oscillator and PLL lock prior to initiating the first boot read access to the flash. In applications which may access the flash within 300 µs of power application, some circuit modification will be required to accommodate migration to GL-S flash.

To initiate the first read or write cycle after power on, the GL-S requires CE# or OE# to transition from High to Low no sooner than t_{VCS} after V_{CC} exceeds V_{CC_min} and V_{IO} exceeds V_{IO_min}. CE# or OE# must be High at least t_{CEH} = 20 ns prior to CE# or OE# falling edge which initiates the first access.

CE# is ignored during Warm Reset; however, to initiate the first read or write cycle after warm reset, the GL-S requires CE# to transition from High to Low no sooner than t_{RH} after RESET# transitions from Low to High. CE# must be high at least t_{CEH} = 20 ns prior to CE# falling edge, which initiates first access. These were not requirements for the GL-P so designs that have CE# fixed low cannot migrate to GL-S without modification to enable active CE# control.

The GL-S allows V_{IO} to ramp concurrently with or after V_{CC} with no restriction on time or voltage differential. During power ramp no input is allowed to exceed V_{IO}. The GL-S data sheet provides enhanced direction on power management and control to design a robust and reliable system.

14. Document History

Document Title:S29GL01GP, S29GL512P, S29GL256P, S29GL128P 1 Gbit, 512, 256, 128 Mbit, 3 V, Page Flash with 90 nm MirrorBit Process Technology Document Number: 002-00886				
Rev.	**ECN No.**	**Orig. of Change**	**Submission Date**	**Description of Change**
**	-	RYSU	10/29/2004	**Spansion Publication Number:** S29GL-P_00 A0:Initial release
			10/20/2005	**A1:Global** Revised all sections of document.
			10/19/2006	**A2:Global** Revised all sections of document. Reformatted document to new template. Changed speed options for S29GL01GP
			11/21/2006	**A3:AC Characteristics** Erase and Program Operations table: Changed tBUSY to a maximum specification.
			12/18/2006	**A4:Global** Changed tACC, tCE specifications on 128 Mb, 256 Mb, and 512 Mb devices. Added 90 and 100 ns speed options. **Write Buffer Programming, Sector Erase** Write Buffer Programming Operation, Sector Erase Operation figures: Deleted “Wait 4 ms” box from flowcharts. **Password Protection Method** Lock Register Program Algorithm figure: Deleted “Wait 4 ms” box from flowchart. **Read-only Operations** table Modified tRC, tACC, tCE, tOE specifications. **Program and Erase Operations** tables Changed tDS specification, deleted write cycle time note. **TSOP Pin and BGA Capacitance table** Changed all specifications in table.
			05/18/2007	**A5:Global** Changed data sheet status to Preliminary. Deleted references to requirement for external WP# pull-up. **Performance Characteristics** *Max. Read Access Times table:* Added note. **Hardware Reset** Deleted note from section. **AC Characteristics** *Reset Timings figure:* Deleted note. **Command Definitions tables** S29GL-P Sector Protection Command Definitions tables: Changed “Global Non-Volatile Freeze” to “Global Volatile Freeze”. **DC Characteristics** *CMOS Compatible table:* Changed ICC1 maximum current for 5 MHz and MHz test conditions. **Page Read Timings figure** Corrected address range for top waveform

Document Title:S29GL01GP, S29GL512P, S29GL256P, S29GL128P 1 Gbit, 512, 256, 128 Mbit, 3 V, Page Flash with 90 nm MirrorBit Process Technology Document Number: 002-00886				
Rev.	**ECN No.**	**Orig. of Change**	**Submission Date**	**Description of Change**
**	-	RYSU	10/23/2007	**A6:Performance Characteristics** Changed speed options for S29GL512P **Ordering Information** Corrected samples OPN valid combinations; changed speed options for S29GL512P **64-Ball Fortified BGA** Clarified ball “D1” connection **56-Pin TSOP** Clarified pin “30” connection **Autoselect** Added recommendation statement **Accelerated Program** Added recommendation statement **Persistent Protection Bits** Removed “Erase” from title and flow chart **Secured Silicon Sector** Sections “Factory Locked Secured Silicon Sector” & “Customer Lockable Secured Silicon Sector”: clarified shipping options **Power-up Sequence Timing** Changed tRH from “Max” to “Min” value **Advance Information on S29GL-R 65 nm MirrorBit Hardware Reset (RESET#) and Power-up Sequence** Added section **Global** Fixed cross-references that were not live hyperlinks
			11/08/2007	**A7:Advance Information on S29GL-R 65 nm MirrorBit Hardware Reset (RESET#) and Power-up Sequence** Changed timing specs and waveforms
			11/28/2007	**A8:Ordering Information** New commercial operating temperature option **Operating Ranges** New operating temperature range
			02/15/2008	**A9:Electrical Specification** Modified Test Conditions **Erase and Programming Performance** Chip Program Time: removed comment **Sector Protection Command Definition,x16 Table** Corrected Lock Register “Read” address **Advance Information on S29GL-R 65 nm MirrorBit Hardware Reset (RESET#) and Power-up Sequence** *Power-Up Sequence Timings* Table: modified Note 2 - reduced timing from 500 µs to 300 µs
			03/19/2008	**A10:Global** Changed document status to Full Production. **DC Characteristics** Changed Max values for Input Load Current (ILI) **Sector Protection Command Definitions (x16 & x8 tables)** Changed Lock Register Read command from “DATA” to “RD”
			06/11/2008	**A11:Ordering Information** Revised Commercial temperature range **Figure: Write Operation Status Flowchart** Updated flowchart

Document Title:S29GL01GP, S29GL512P, S29GL256P, S29GL128P 1 Gbit, 512, 256, 128 Mbit, 3 V, Page Flash with 90 nm MirrorBit Process Technology Document Number: 002-00886				
Rev.	**ECN No.**	**Orig. of Change**	**Submission Date**	**Description of Change**
**	-	RYSU	11/20/2009	**A12:Table Input/Output Descriptions** Removed RFU description **Figure 64-ball Fortified Ball Grid Array** Changed all RFU pins to NC pins **Figure 56-pin Standard TSOP (Top View)** Changed all RFU pins to NC pins **Table Autoselect Exit** Changed cycle description to *Auto Select Exit Command* **Table Chip Erase** Changed address of last C source code command from 0x000h to 0x555h **Erase Suspend/Erase Resume** Changed first paragraph, second sentence to sector address is “don't care” for Erase Suspend Changed sixth paragraph, second sentence to sector address is “don't care” for Erase Suspend **Tables** **Program Suspend** **Program Resume** **Unlock Bypass Entry** **Unlock Bypass Program** **Unlock Bypass Reset** Added Byte Address to tables **Unlock Bypass** Third paragraph, first sentence added unlock bypass Sector Erase and unlock bypass Chip Erase as valid commands Changed paragraph, third sentence to sector address of exit command is “don't care”. **Writing Commands/Command Sequence** Changed tables listed in fourth sentence to Table 6.1-6.4 **WP#/ACC Method** Changed table listed in Note section to 11.2. **Secured Silicon Sector Entry/Exit Command Sequence** Added source code for program under Table 10.3 **Table Secured Silicon Sector Exit** Changed Byte and Word addresses of Exit Cycle to “XXXh” **Figure Test Setup** Changed test setup to show only a load of CL **Table Test Specification** Removed Output Load Test Condition **Table S29GL-P Erase and Program Operations** Removed tGHWL **Table S29GL-P Alternate CE# Controlled Erase and Program Operations** Changed description of tGHEL to (OE# High to CE# Low) Change Note 2 to “DC Characteristics **TSOP Pin and BGA Package Capacitance** Changed RESET# values.

Document Title:S29GL01GP, S29GL512P, S29GL256P, S29GL128P 1 Gbit, 512, 256, 128 Mbit, 3 V, Page Flash with 90 nm MirrorBit Process Technology Document Number: 002-00886				
Rev.	**ECN No.**	**Orig. of Change**	**Submission Date**	**Description of Change**
**	-	RYSU	11/20/2008	**Table S29GL-P Memory Array Command Definitions, x16** Changed number of cycles for Device ID to 6 Changed number of cycles for Write Buffer to 6 Added note regarding the number of cycles in a Write Buffer command **Table S29GL-P Memory Array Command Definitions, x8** Changed number of cycles for Device ID to 6 Changed number of cycles for Write Buffer to 6 Added note regarding the number of cycles in a Write Buffer command **Table System Interface String** Changed value of address 20h (x16) to 0009h and description to "Typical timeout for buffer write 2n µs" Added values of 128 Mb-512 Mb densities to address 22h (x16) **Table Device Geometry Definition** For address 31h (x16) corrected x8 address
			11/17/2010	**A13:Performance Characteristics** Updated access time options for S29GL512P **Ordering Information** Updated speed options for S29GL512P **Read Operation Timing** Figure Added note
			10/22/2012	**A14:Sector Erase** Clarified tSEA **Erase Suspend** Clarified tSEA **Writing Commands/Command Sequences** Sub-section RY/BY#: Clarified last sentence **Figure Advanced Sector Protection/Unprotection** Corrected Note numbering **Table S29GL-P Memory Array Command Definitions, x8** Corrected Address for 3rd Cycle of Write-To-Buffer-Abort Reset command **Table System Interface String** Changed value of address 20h (x16) to 0006h **Advance Information on S29GL-R 65 nm MirrorBit Hardware Reset (RESET#) and Power-up Sequence** Updated section title to Advance Information on S29GL-S Eclipse 65 nm MirrorBit Power-On and Warm Reset Timing Updated section to cover GL-S Power-On and Warm Reset Timing
*A	5051914	RYSU	12/16/2015	Updated to Cypress template
*B	5741254	AESATMP7	05/22/2017	Updated Cypress Logo and Copyright.

Sales, Solutions, and Legal Information

Worldwide Sales and Design Support

Cypress maintains a worldwide network of offices, solution centers, manufacturer's representatives, and distributors. To find the office closest to you, visit us at Cypress Locations.

Products

Automotive.....cypress.com/go/automotive
Clocks & Buffers ..... cypress.com/go/clocks
Interface..... cypress.com/go/interface
Lighting & Power Control.....cypress.com/go/powerpsoc
Memory..... cypress.com/go/memory
PSoC .....cypress.com/go/psoc
Touch Sensing ..... cypress.com/go/touch
USB Controllers.....cypress.com/go/USB
Wireless/RF ..... cypress.com/go/wireless

PSoC® Solutions

psoc.cypress.com/solutions

PSoC 1 | PSoC 3 | PSoC 4 | PSoC 5LP | PSoC 6

Cypress Developer Community

Community | Forums | Blogs | Video | Training

Technical Support

cypress.com/go/support

© Cypress Semiconductor Corporation, 2004-2017. This document is the property of Cypress Semiconductor Corporation and its subsidiaries, including Spansion LLC ("Cypress"). This document, including any software or firmware included or referenced in this document ("Software"), is owned by Cypress under the intellectual property laws and treaties of the United States and other countries worldwide. Cypress reserves all rights under such laws and treaties and does not, except as specifically stated in this paragraph, grant any license under its patents, copyrights, trademarks, or other intellectual property rights. If the Software is not accompanied by a license agreement and you do not otherwise have a written agreement with Cypress governing the use of the Software, then Cypress hereby grants you a personal, non-exclusive, nontransferable license (without the right to sublicense) (1) under its copyright rights in the Software (a) for Software provided in source code form, to modify and reproduce the Software solely for use with Cypress hardware products, only internally within your organization, and (b) to distribute the Software in binary code form externally to end users (either directly or indirectly through resellers and distributors), solely for use on Cypress hardware product units, and (2) under those claims of Cypress's patents that are infringed by the Software (as provided by Cypress, unmodified) to make, use, distribute, and import the Software solely for use with Cypress hardware products. Any other use, reproduction, modification, translation, or compilation of the Software is prohibited.

TO THE EXTENT PERMITTED BY APPLICABLE LAW, CYPRESS MAKES NO WARRANTY OF ANY KIND, EXPRESS OR IMPLIED, WITH REGARD TO THIS DOCUMENT OR ANY SOFTWARE OR ACCOMPANYING HARDWARE, INCLUDING, BUT NOT LIMITED TO, THE IMPLIED WARRANTIES OF MERCHANTABILITY AND FITNESS FOR A PARTICULAR PURPOSE. To the extent permitted by applicable law, Cypress reserves the right to make changes to this document without further notice. Cypress does not assume any liability arising out of the application or use of any product or circuit described in this document. Any information provided in this document, including any sample design information or programming code, is provided only for reference purposes. It is the responsibility of the user of this document to properly design, program, and test the functionality and safety of any application made of this information and any resulting product. Cypress products are not designed, intended, or authorized for use as critical components in systems designed or intended for the operation of weapons, weapons systems, nuclear installations, life-support devices or systems, other medical devices or systems (including resuscitation equipment and surgical implants), pollution control or hazardous substances management, or other uses where the failure of the device or system could cause personal injury, death, or property damage ("Unintended Uses"). A critical component is any component of a device or system whose failure to perform can be reasonably expected to cause the failure of the device or system, or to affect its safety or effectiveness. Cypress is not liable, in whole or in part, and you shall and hereby do release Cypress from any claim,