QSH4218-x-10k Hardware Manual

Hardware Version V1.00 | Document Revision V1.50 • 24.04.2023

QSH4218-x-10k is a NEMA17 (42mm) 2-phase stepper motor including a small size optical incremental encoder kit. It comes with a resolution of 625 lines (40000 counts). Trinamic's Stepper motors are quality motors for universal use. They feature a long life due to ball bearings and no wearing out parts.

Features

- Low Cost
- High Resolution
- Small Dimension
- Easy Mounting

Applications

- Stepper Motor Servo
- Precision Motion Control
- Position Monitoring
- Automated Equipment
- Robotics

Simplified Block Diagram

©2023 TRINAMIC Motion Control GmbH & Co. KG, Hamburg, Germany
Terms of delivery and rights to technical change reserved.
Download newest version at: www.trinamic.com

Read entire documentation.

Contents

1 Order Codes **3**

2 Motor Specifications and Characteristics **4**
2.1 Technical and Mechanical Parameters . . . 4
2.2 Torque-Speed Diagrams . . . 5
2.2.1 QSH4218-35-10-027-10k . . . 5
2.2.2 QSH4218-51-10-049-10k . . . 6

3 Technical Specifications of the Encoders **6**
3.1 Electrical Encoder Parameters . . . 6
3.2 Mechanical Encoder Parameters . . . 7
3.3 Environmental Encoder Parameters . . . 7

4 Connectors and Signals **7**
4.1 Motor Connector . . . 7
4.2 Encoder Connector . . . 8
4.3 Wave Form . . . 9

5 Mechanical Drawings **10**

6 Considerations for Operation **11**
6.1 Choosing the best Fitting Motor for an Application . . . 11
6.1.1 Determining the Maximum Torque Required . . . 11
6.2 Motor Current Settings . . . 11
6.2.1 Choosing the Optimum Current Setting . . . 12
6.2.2 Choosing the Standby Current Setting . . . 12
6.3 Motor Driver Supply Voltage . . . 13
6.3.1 Determining if the Given Driver Voltage is Sufficient . . . 13
6.4 Back EMF (BEMF) . . . 14
6.5 Choosing the Commutation Scheme . . . 14
6.5.1 Fullstepping . . . 15

7 Figures Index **16**

8 Tables Index **17**

9 Supplemental Directives **18**
9.1 Producer Information . . . 18
9.2 Copyright . . . 18
9.3 Trademark Designations and Symbols . . . 18
9.4 Target User . . . 18
9.5 Disclaimer: Life Support Systems . . . 18
9.6 Disclaimer: Intended Use . . . 18
9.7 Collateral Documents & Tools . . . 19

10 Revision History **20**
10.1 Hardware Revision . . . 20
10.2 Document Revision . . . 20

©2023 TRINAMIC Motion Control GmbH & Co. KG, Hamburg, Germany
Terms of delivery and rights to technical change reserved.
Download newest version at www.trinamic.com

ANALOG DEVICES
AHEAD OF WHAT'S POSSIBLE™

1 Order Codes

Order Code	Old Order Code	Description	Size mm (LxWxH)
QSH4218-35-10-027-10k	QSH4218-35-10-027-10000-AT	Motor + Encoder Module, NEMA17 2-phase stepper motor (1.0A / 0.27Nm) with incremental encoder kit, resolution of 625lpr (40.000cpr), ABN, TTL	42x42x51.5
QSH4218-51-10-049-10k	QSH4218-51-10-049-10000-AT	Motor + Encoder Module, NEMA17 2-phase stepper motor (1.0A / 0.49Nm) with incremental encoder kit, resolution of 625lpr (40.000cpr), ABN, TTL	42x42x65

Table 1: Order codes

Other encoder resolutions, signal output types, and customized motor options on request.

©2023 TRINAMIC Motion Control GmbH & Co. KG, Hamburg, Germany
Terms of delivery and rights to technical change reserved.
Download newest version at www.trinamic.com

2 Motor Specifications and Characteristics

TRINAMIC's stepper motors are quality motors for universal use. They feature a long life due to ball bearings and no wearing out parts. These hybrid stepper motors are optimized for microstepping and give a good fit to the TRINAMIC family of motor controllers and drivers..

2.1 Technical and Mechanical Parameters

The main characteristics are:

- NEMA17 mounting configuration
- flange max. 42.3mm x 42.3mm
- 5mm axis diameter, 20mm axis length
- step angle: 1.8°
- optimized for microstep operation
- 4 wire connection

Specifications	Unit	QSH4218-35-10-027-10k	QSH4218-51-10-049-10k
Rated Voltage	V	5.3	5.0
Rated Phase Current	A	1.0	1.0
Phase Resistance at 20°C	Ω	5.3	5.0
Phase Inductance (typ.)	mH	6.6	8.0
Holding Torque (typ.)	Ncm (oz in)	27 (38)	49 (69)
Detent Torque	Ncm	22	28
Rotor Inertia	g cm^2	35	68
Weight (Mass)	Kg	0.22	0.35
Insulation Class		B	B
Insulation Resistance	Ω	100M	100M
Dialectic Strength (for one minute)	VAC	500	500
Connection Wires		4	4
Step Angle	°	1.8	1.8
Step angle Accuracy (max.)	%	5	5
Flange Size (max.)	mm	42.3	42.3
Motor Length (max.)	mm	33.5	47
Axis Diameter	mm	5.0	5.0
Axis Length (typ.)	mm	24.0	24.0
Axis D-cut (0.5mm depth)	mm	20.0	20.0
Shaft Radial Play (450g load)	mm	0.02	0.02

©2023 TRINAMIC Motion Control GmbH & Co. KG, Hamburg, Germany
Terms of delivery and rights to technical change reserved.
Download newest version at www.trinamic.com

Shaft Axial Play (450g load)	mm	0.08	0.08
Maximum Radial Force (20 mm from front flange)	N	28	28
Maximum Axial Force	N	10	10
Ambient Temperature	°C	-20…+50	-20…+50
Temp Rise (rated current, 2phase on)	°C max.	80	80
Winding Thermal Time Constant	min	18	22
Surface Thermal Time Constant	min	20	25

Table 2: Electrical and Mechanical Characteristics Motor

2.2 Torque-Speed Diagrams

The torque-speed figures detail motor torque characteristics measured in block commutation. Please be careful not to operate the motors outside the blue field. This is possible for short times only because of a resulting high coil temperature. The motors have insulation class B. The blue field is described by rated speed and rated torque.

2.2.1 QSH4218-35-10-027-10k

Testing conditions: Driver Supply 24V, 1.0A RMS Coil Current, Half Step Operation.

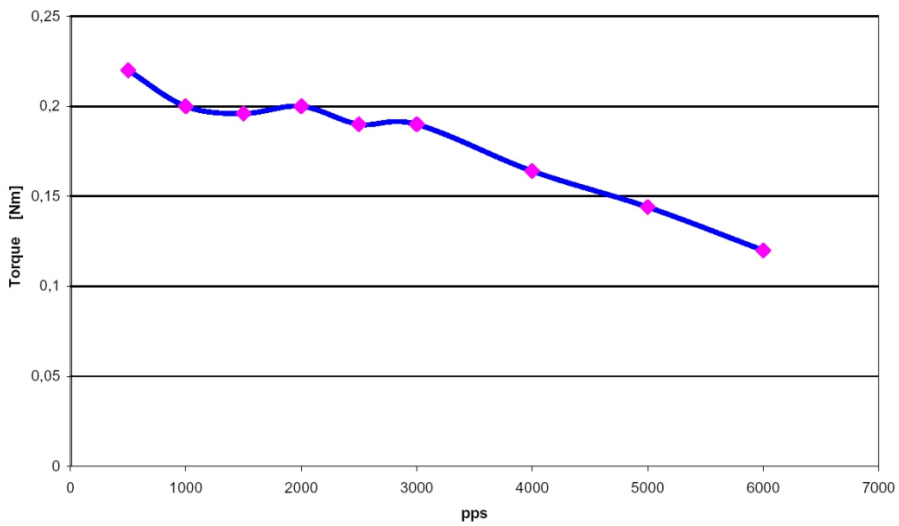

Figure 1: QSH4218-35-10-027-10k velocity vs. torque characteristic

©2023 TRINAMIC Motion Control GmbH & Co. KG, Hamburg, Germany
Terms of delivery and rights to technical change reserved.
Download newest version at www.trinamic.com

2.2.2 QSH4218-51-10-049-10k

Testing conditions: Driver Supply 24V, 1.0A RMS Coil Current, Half Step Operation.

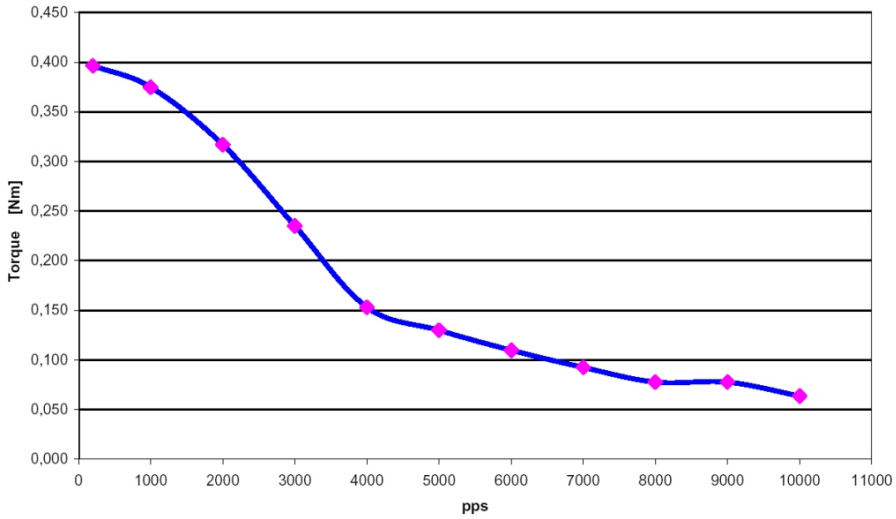

Figure 2: QSH4218-51-10-049-10k velocity vs. torque characteristics

3 Technical Specifications of the Encoders

3.1 Electrical Encoder Parameters

Parameter	Min	Typ	Max	Unit
Supply voltage	4.5	5	5.5	V
Supply current			90	mA
Rise/fall time			10	ns
Frequency			1500	kHz
Output Voltage "'H"'	2.4			V
Input Voltage "'L"'			0.4	V
Max. output current			5	mA
Disc lines		625		lines
Resolution		40.000		increments

Table 3: Electrical Characteristics Encoder

©2023 TRINAMIC Motion Control GmbH & Co. KG, Hamburg, Germany
Terms of delivery and rights to technical change reserved.
Download newest version at www.trinamic.com

3.2 Mechanical Encoder Parameters

Parameter	Min	Typ	Max	Unit
Hollow Diameter (Symbol D in Drawings)		4		mm
Starting Torque			0.8	Ncm
Shaft Loading Axial			25	N
Shaft Loading Radial			40	N
Max. RPM			6000	rpm
Net weight		30		g

Table 4: Mechanical Specifications

3.3 Environmental Encoder Parameters

Parameter	Description
Operating Temperature	-20 – +85°C
Storage Temperature	-20 – +85°C
Operating Humidityl	RH 85% max, non collecting
Shock	490 m/s^2, 3Dx2 times
Vibration	1.2mm, 10-55kHz, 3Dx30min
Protection	IP40

Table 5: Environmental Specifications

4 Connectors and Signals

4.1 Motor Connector

Color	Wire Type	Signal Name
Black	UL1430 AWG26	Coil A / Motor coil A pin 1
Green	UL1430 AWG26	Coil -A / Motor coil A pin 2
Red	UL1430 AWG26	Coil B / Motor coil B pin 1
Blue	UL1430 AWG26	Coil -B / Motor coil B pin 2

Table 7: Connector and signals of motor

©2023 TRINAMIC Motion Control GmbH & Co. KG, Hamburg, Germany
Terms of delivery and rights to technical change reserved.
Download newest version at www.trinamic.com

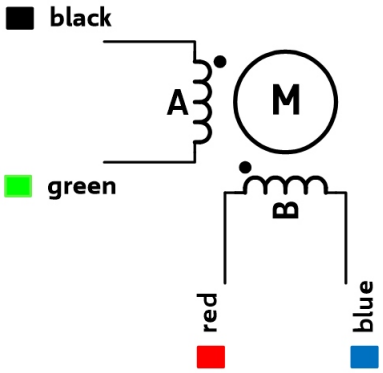

Figure 3: Lead wire configuration

4.2 Encoder Connector

Pin Number	Color	Wire Type	Signal Name
1	Red	UL2517 AWG28	VCC
2	Black	UL2517 AWG28	GND
3	White	UL2517 AWG28	A+
4	White/Black	UL2517 AWG28Black	A-
5	Green	UL2517 AWG28	B+
6	Green/Black	UL2517 AWG28	B-
7	Yellow	UL2517 AWG28	Z+
8	Yellow/Black	UL2517 AWG28	Z-
9	Blue	UL2517 AWG28	Shield

Table 9: Connector and signals of the encoder

The required encoder cable connector is a Molex type 5023800900 CLIK-MATE™crimp housing using Molex type 5023810000 CLIK-MATE™crimp terminals.

©2023 TRINAMIC Motion Control GmbH & Co. KG, Hamburg, Germany
Terms of delivery and rights to technical change reserved.
Download newest version at www.trinamic.com

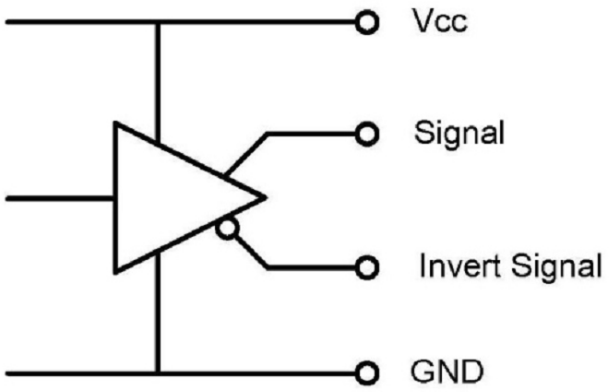

Figure 4: Connection and circuit diagram for the line driver outputs

4.3 Wave Form

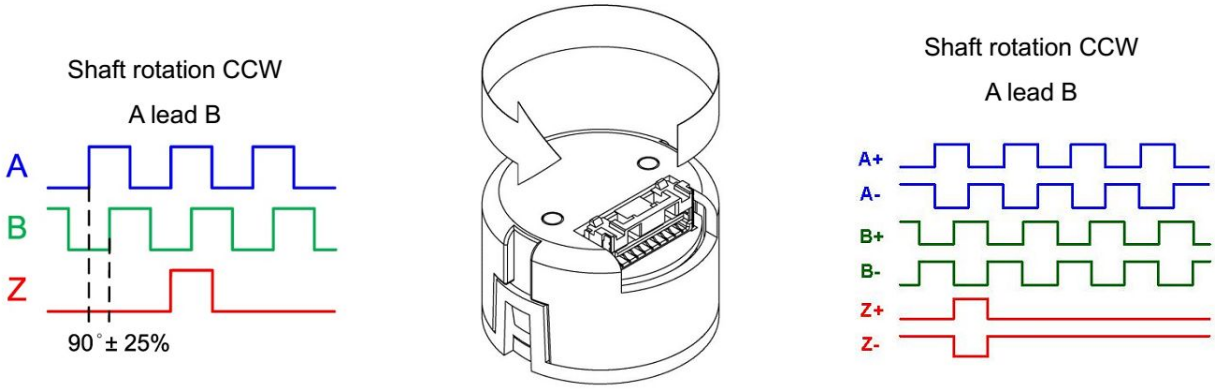

Figure 5: Example wave form for CCW rotation

©2023 TRINAMIC Motion Control GmbH & Co. KG, Hamburg, Germany
Terms of delivery and rights to technical change reserved.
Download newest version at www.trinamic.com

5 Mechanical Drawings

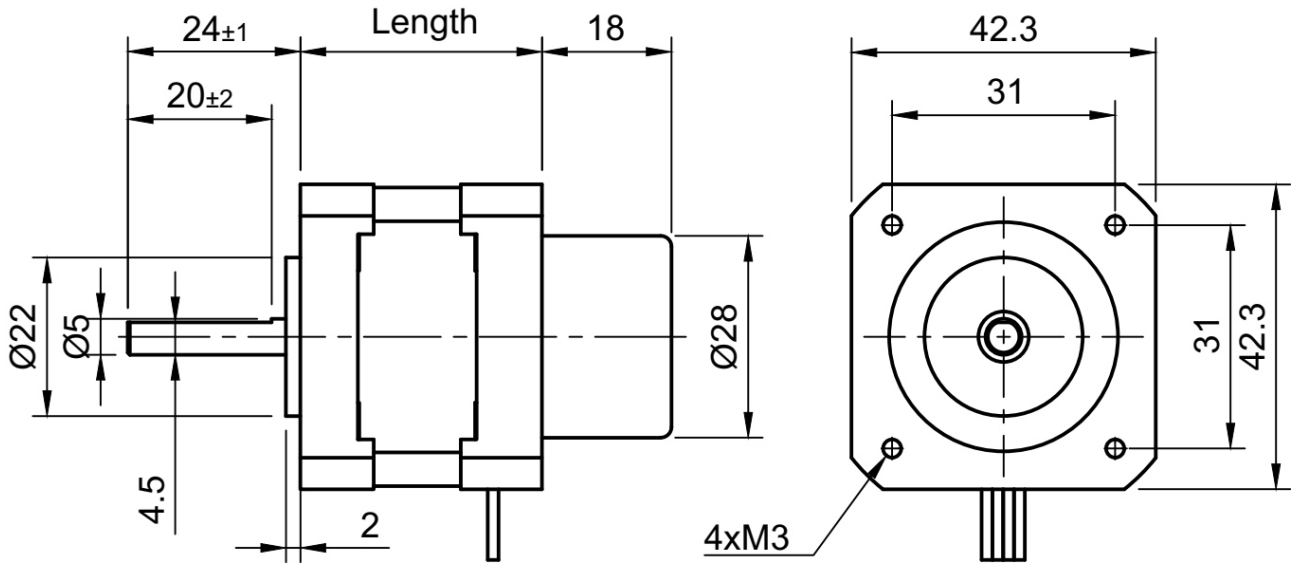

Figure 6: Dimensions of motor & encoder kit (all units = mm)

Motor Type	Body Length
QSH4218-35-10-027-10k	33.5mm
QSH4218-51-10-049-10k	47mm

Table 11: Motor length

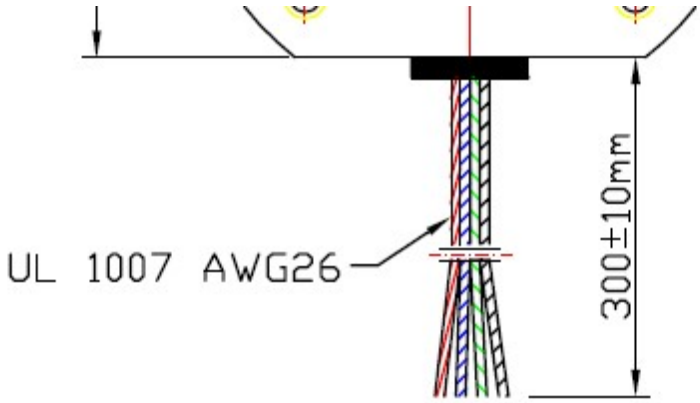

Figure 7: Length of motor wires/cables (all units = mm)

©2023 TRINAMIC Motion Control GmbH & Co. KG, Hamburg, Germany
Terms of delivery and rights to technical change reserved.
Download newest version at www.trinamic.com

6 Considerations for Operation

The following sections try to help you to correctly set the key operation parameters to get a stable system.

6.1 Choosing the best Fitting Motor for an Application

For an optimum solution it is important to fit the motor to the application and to choose the best mode of operation. The key parameters are desired motor torque and velocity. While the motor holding torque describes the torque at stand-still, and gives a good indication for comparing different motors, it is not the key parameter for the best fitting motor. The required torque is a result of static load on the motor, dynamic loads which occur during acceleration/deceleration and loads due to friction. In most applications the load at maximum desired motor velocity is most critical, because of the reduction of motor torque at higher velocity. While the required velocity generally is well known, the required torque often is only roughly known. Generally, longer motors and motors with a larger diameter deliver a higher torque. But, using the same driver voltage for the motor, the larger motor earlier loses torque when increasing motor velocity. This means, that for a high torque at a high motor velocity, the smaller motor might be the better fitting solution.
Please refer to the torque vs. velocity diagram to determine the best fitting motor, which delivers enough torque at your desired velocities.

6.1.1 Determining the Maximum Torque Required

Try a motor which should roughly fit. Take into consideration worst case conditions, i.e. minimum driver supply voltage and minimum driver current, maximum or minimum environment temperature (whichever is worse) and maximum friction of mechanics. Now, consider that you want to be on the safe side, and add some 10 percent safety margin taking into account unknown degradation of mechanics and motor.

6.2 Motor Current Settings

The motor torque is proportional to the motor current as long as the current stays at a reasonable level. At the same time, the power consumption of the motor (and driver) is proportional to the square of the motor current. Optimally, the motor should be chosen to bring the required performance at the rated motor current. For a short time, the motor current may be raised above this level to get increased torque, but care has to be taken not to exceed the maximum coil temperature of 130°C respectively a continuous motor operation temperature of 90°C.

©2023 TRINAMIC Motion Control GmbH & Co. KG, Hamburg, Germany
Terms of delivery and rights to technical change reserved.
Download newest version at www.trinamic.com

Percentage of rated current	Percentage of motor torque	Percentage of static motor power dissipation	Comment
150%	≤150%	225%	Limit operation to a few seconds
125%	125%	156%	Operation possible for a limited time
100%	100%	100% $= 2 * I_{RMSRATED} * R_{COIL}$	Normal operation
85%	85%	72%	Normal operation
75%	75%	56%	Normal operation
50%	50%	25%	Reduced microstep exactness due to torque reducing in the magnitude of detent torque
38%	38%	14%	see above
25%	25%	6%	see above
0%	see detent torque	0%	Motor might lose position if the application's friction is too low

Table 13: Motor current settings

6.2.1 Choosing the Optimum Current Setting

Generally, you choose the motor to give the desired performance at nominal current. For short time operation, you might want to increase the motor current to get a higher torque than specified for the motor. In a hot environment, you might want to work with a reduced motor current to reduce motor self heating.

The TRINAMIC drivers allow setting the motor current for up to three conditions:

- Stand still (choose a low current)
- Nominal operation (nominal current)
- High acceleration (if increased torque is required: You may choose a current above the nominal setting, but be aware, that the mean power dissipation shall not exceed the motors nominal rating)

If you reach the velocity limit, it might be a good idea to reduce the motor current to avoid resonances occurring. Please refer to the information about choosing the driver voltage.

6.2.2 Choosing the Standby Current Setting

Most applications do not need much torque during motor stand-still. You should always reduce motor current during stand still. This reduces power dissipation and heat generation. Depending on your application, you typically at least can half power dissipation. There are several aspects why this is possible: In standstill, motor torque is higher than at any other velocity. Thus, you do not need the full current even with a static load! Your application might need no torque at all, but you might need to keep the exact

©2023 TRINAMIC Motion Control GmbH & Co. KG, Hamburg, Germany
Terms of delivery and rights to technical change reserved.
Download newest version at www.trinamic.com

microstep position. Try how low you can go in your application. If the microstep position exactness does not matter for the time of standstill, you might even reduce the motor current to zero, provided that there is no static load on the motor and enough friction to avoid complete position loss.

6.3 Motor Driver Supply Voltage

The driver supply voltage in many applications cannot be chosen freely, because other components have a fixed supply voltage of e.g. 24V DC. If you have possibility to choose the driver supply voltage, please refer to the driver data sheet, and consider that a higher voltage means a higher torque at higher velocity. The motor torque diagrams are measured for a given supply voltage. You typically can scale the velocity axis (steps/sec) proportionally to the supply voltage to adapt the curve, e.g. if the curve is measured for 48V and you consider operation at 24V, half all values on the x-Axis to get an idea of the motor performance. For a chopper driver, consider the following corner values for the driver supply voltage (motor voltage). The table is based on the nominal motor voltage, which normally just has a theoretical background to determine the resistive loss in the motor.
Comment on the nominal motor voltage (please refer to motor technical data table):

$$U_{COILNOM} = I_{RMSRATED} * R_{COIL}$$

Parameter	Value	Comment
Minimum driver supply voltage	$2 * U_{COILNOM}$	Very limited motor velocity. Only slow movement without torque reduction. Chopper noise might become audible.
Optimum driver supply voltage	$\geq 4 * U_{COILNOM}$ and $\leq 22 * U_{COILNOM}$	Choose the best fitting voltage in this range using the motor torque curve and the driver data. You can scale the torque curve proportionally to the actual driver supply voltage.
Maximum rated driver supply voltage	$25 * U_{COILNOM}$	When exceeding this value, the magnetic switching losses in the motor reach a relevant magnitude and the motor might get too hot at nominal current. Thus there is no benefit in further raising the voltage.

Table 15: Driver supply voltage considerations

6.3.1 Determining if the Given Driver Voltage is Sufficient

Try to brake the motor and listen to it at different velocities. Does the sound of the motor get raucous or harsh when exceeding some velocity? Then the motor gets into a resonance area. The reason is that the motor back-EMF voltage reaches the supply voltage. Thus, the driver cannot bring the full current into the motor any more. This is typically a sign, that the motor velocity should not be further increased, because resonances and reduced current affect motor torque.

Measure the motor coil current at maximum desired velocity:

©2023 TRINAMIC Motion Control GmbH & Co. KG, Hamburg, Germany
Terms of delivery and rights to technical change reserved.
Download newest version at www.trinamic.com

- For microstepping: If the waveform is still basically sinusoidal, the motor driver supply voltage is sufficient.
- For Fullstepping: If the motor current still reaches a constant plateau, the driver voltage is sufficient.

If you determine, that the voltage is not sufficient, you could either increase the voltage or reduce the current (and thus torque).

6.4 Back EMF (BEMF)

Within SI units, the numeric value of the BEMF constant has the same numeric value as the numeric value of the torque constant. For example, a motor with a torque constant of 1 Nm/A would have a BEMF constant of 1V/rad/s. Turning such a motor with 1 rps (1 rps = 1 revolution per second = 6.28 rad/s) generates a BEMF voltage of 6.28V.
The Back EMF constant can be calculated as:

$$U_{BEMF} = \frac{MotorHoldingTorque}{2*I_{NOM}}$$

The voltage is valid as RMS voltage per coil, thus the nominal current INOM is multiplied by 2 in this formula, since the nominal current assumes a full step position, with two coils switched on. The torque is in unit [Nm] where 1Nm = 100cNm = 1000mNm.

One can easily measure the BEMF constant of a two phase stepper motor with a (digital) scope. One just has to measure the voltage of one coil (one phase) when turning the axis of the motor manually. With this, one gets a voltage (amplitude) and a frequency of a periodic voltage signal (sine wave). The full step frequency is 4 times the frequency the measured sine wave.

6.5 Choosing the Commutation Scheme

While the motor performance curves are depicted for fullstepping and halfstepping, most modern drivers provide a microstepping scheme. Microstepping uses a discrete sine and a cosine wave to drive both coils of the motor, and gives a very smooth motor behavior as well as an increased position resolution. The amplitude of the waves is 1.41 times the nominal motor current, while the RMS values equal the nominal motor current. The stepper motor does not make loud steps any more – it turns smoothly! Therefore, 16 microsteps or more are recommended for a smooth operation and the avoidance of resonances. To operate the motor at fullstepping, some considerations should be taken into account.

©2023 TRINAMIC Motion Control GmbH & Co. KG, Hamburg, Germany
Terms of delivery and rights to technical change reserved.
Download newest version at www.trinamic.com

Driver Scheme	Resolution	Velocity Range	Torque	Comment
Fullstepping	200 steps per rotation	Low to very high. Skip resonance areas in low to medium velocity range	Full torque if dampener used, otherwise reduced torque in resonance area	Audible noise and vibrations especially at low velocities
Halfstepping	200 steps per rotation * 2	Low to very high. Skip resonance areas in low to medium velocity range	Full torque if dampener used, otherwise reduced torque in resonance area	Audible noise and vibrations especially at low velocities
Microstepping	200 * (number of microsteps) per rotation	Low to high	Reduced torque at very high velocity	Low noise, smooth motor behavior
Mixed: Microstepping and fullstepping for high velocities	200 * (number of microsteps) per rotation	Low to very high	Full torque	At high velocities, there is no audible difference for fullstepping

Table 17: Comparing microstepping and fullstepping

Microstepping gives the best performance for most applications and can be considered as state-of-the art. However, fullstepping allows some ten percent higher motor velocities, when compared to microstepping. A combination of microstepping at low and medium velocities and fullstepping at high velocities gives best performance at all velocities and is most universal. Most Trinamic driver modules support all three modes.

6.5.1 Fullstepping

When operating the motor in fullstep, resonances may occur. The resonance frequencies depend on the motor load. When the motor gets into a resonance area, it even might not turn anymore! Thus you should avoid resonance frequencies.

Note

Do not operate the motor at resonance velocities for extended periods of time. Use a reasonably high acceleration to accelerate to a resonance-free velocity. This avoids the build-up of resonances. When resonances occur at very high velocities, try reducing the current setting.
A resonance dampener might be required, if the resonance frequencies cannot be skipped.

©2023 TRINAMIC Motion Control GmbH & Co. KG, Hamburg, Germany
Terms of delivery and rights to technical change reserved.
Download newest version at www.trinamic.com

7 Figures Index

1 QSH4218-35-10-027-10k velocity vs. torque characteristic 5
2 QSH4218-51-10-049-10k velocity vs. torque characteristics 6
3 Lead wire configuration 8
4 Connection and circuit diagram for the line driver outputs 9
5 Example wave form for CCW rotation 9
6 Dimensions of motor & encoder kit (all units = mm) 10
7 Length of motor wires/cables (all units = mm) 10

©2023 TRINAMIC Motion Control GmbH & Co. KG, Hamburg, Germany
Terms of delivery and rights to technical change reserved.
Download newest version at www.trinamic.com

ANALOG DEVICES
AHEAD OF WHAT'S POSSIBLE™

8 Tables Index

1 Order codes 3
2 Electrical and Mechanical Characteristics Motor 5
3 Electrical Characteristics Encoder . . . 6
4 Mechanical Specifications 7
5 Environmental Specifications 7
7 Connector and signals of motor . . . 7
9 Connector and signals of the encoder 8
11 Motor length 10
13 Motor current settings 12
15 Driver supply voltage considerations 13
17 Comparing microstepping and full-stepping 15
18 Hardware Revision 20
19 Document Revision 20

©2023 TRINAMIC Motion Control GmbH & Co. KG, Hamburg, Germany
Terms of delivery and rights to technical change reserved.
Download newest version at www.trinamic.com

ANALOG DEVICES
AHEAD OF WHAT'S POSSIBLE™

9 Supplemental Directives

9.1 Producer Information

9.2 Copyright

TRINAMIC owns the content of this user manual in its entirety, including but not limited to pictures, logos, trademarks, and resources. © Copyright 2023 TRINAMIC. All rights reserved. Electronically published by TRINAMIC, Germany.

Redistribution of sources or derived formats (for example, Portable Document Format or Hypertext Markup Language) must retain the above copyright notice, and the complete data sheet, user manual, and documentation of this product including associated application notes; and a reference to other available product-related documentation.

9.3 Trademark Designations and Symbols

Trademark designations and symbols used in this documentation indicate that a product or feature is owned and registered as trademark and/or patent either by TRINAMIC or by other manufacturers, whose products are used or referred to in combination with TRINAMIC's products and TRINAMIC's product documentation.

This Hardware Manual is a non-commercial publication that seeks to provide concise scientific and technical user information to the target user. Thus, trademark designations and symbols are only entered in the Short Spec of this document that introduces the product at a quick glance. The trademark designation /symbol is also entered when the product or feature name occurs for the first time in the document. All trademarks and brand names used are property of their respective owners.

9.4 Target User

The documentation provided here, is for programmers and engineers only, who are equipped with the necessary skills and have been trained to work with this type of product.

The Target User knows how to responsibly make use of this product without causing harm to himself or others, and without causing damage to systems or devices, in which the user incorporates the product.

9.5 Disclaimer: Life Support Systems

TRINAMIC Motion Control GmbH & Co. KG does not authorize or warrant any of its products for use in life support systems, without the specific written consent of TRINAMIC Motion Control GmbH & Co. KG.

Life support systems are equipment intended to support or sustain life, and whose failure to perform, when properly used in accordance with instructions provided, can be reasonably expected to result in personal injury or death.

Information given in this document is believed to be accurate and reliable. However, no responsibility is assumed for the consequences of its use nor for any infringement of patents or other rights of third parties which may result from its use. Specifications are subject to change without notice.

9.6 Disclaimer: Intended Use

The data specified in this user manual is intended solely for the purpose of product description. No representations or warranties, either express or implied, of merchantability, fitness for a particular purpose

or of any other nature are made hereunder with respect to information/specification or the products to which information refers and no guarantee with respect to compliance to the intended use is given.

In particular, this also applies to the stated possible applications or areas of applications of the product. TRINAMIC products are not designed for and must not be used in connection with any applications where the failure of such products would reasonably be expected to result in significant personal injury or death (safety-Critical Applications) without TRINAMIC's specific written consent.

TRINAMIC products are not designed nor intended for use in military or aerospace applications or environments or in automotive applications unless specifically designated for such use by TRINAMIC. TRINAMIC conveys no patent, copyright, mask work right or other trade mark right to this product. TRINAMIC assumes no liability for any patent and/or other trade mark rights of a third party resulting from processing or handling of the product and/or any other use of the product.

9.7 Collateral Documents & Tools

This product documentation is related and/or associated with additional tool kits, firmware and other items, as provided on the product page at: www.trinamic.com.

©2023 TRINAMIC Motion Control GmbH & Co. KG, Hamburg, Germany
Terms of delivery and rights to technical change reserved.
Download newest version at www.trinamic.com

10 Revision History

10.1 Hardware Revision

Version	Date	Author	Description
1.00	24.01.2019	TMC	Initial release

Table 18: Hardware Revision

10.2 Document Revision

Version	Date	Author	Description
1.00	22.02.2019	SK	Initial release.
1.10	16.06.2019	SK	Resolution corrected.
1.20	11.12.2019	SK	Motor wires type update to UL1430.
1.30	11.08.2020	SK	Lpr parameter updated. Motor cable length information added. Thermal time constant added.
1.40	16.04.2021	SK	Order codes and naming updated.
1.50	24.04.2023	SK	Typos and layout corrected.

Table 19: Document Revision

©2023 TRINAMIC Motion Control GmbH & Co. KG, Hamburg, Germany
Terms of delivery and rights to technical change reserved.
Download newest version at www.trinamic.com

ANALOG DEVICES
AHEAD OF WHAT'S POSSIBLE™