CUI INC
a bel group

SERIES: PSK-S12B | **DESCRIPTION:** AC-DC POWER SUPPLY

FEATURES

- universal input range (90 ~ 264 Vac)
- Class B emissions (EN55032/CISPR/FCC)
- certified to IEC/EN/UL 62368-1
- designed to meet IEC/EN 60335
- short circuit protection
- over voltage protection
- < 75 mW no-load power consumption
- Class II

MODEL	output voltage (Vdc)	output current min (A)	output current max (A)	output power max (W)	ripple and noise[1] max (mVp-p)	efficiency[2] typ (%)
PSK-S12B-5	5	0	2.0	10	100	80
PSK-S12B-9	9	0	1.34	12	100	85
PSK-S12B-12	12	0	1.0	12	120	85
PSK-S12B-15	15	0	0.8	12	150	85
PSK-S12B-24	24	0	0.5	12	240	87

Notes:
1. At full load, nominal input, 20 MHz bandwidth oscilloscope, with 1 µF ceramic and 10 µF electrolytic capacitors on the output.
2. At 230 Vac, full load, 25°C.
3. All specifications are measured at Ta=25°C, nominal input voltage, and 75% rated output load unless otherwise specified.

PART NUMBER KEY

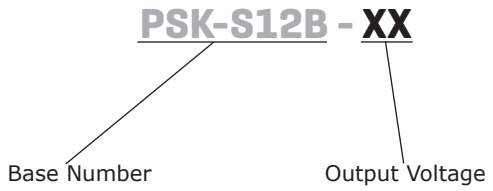

INPUT

parameter	conditions/description	min	typ	max	units
voltage		90 120		264 370	Vac Vdc
frequency		47		63	Hz
current	at 100 Vac, full load			400	mA
inrush current	at 240 Vac, cold start, 25°C			50	A
leakage current	at 264 Vac			0.25	mA

OUTPUT

parameter	conditions/description	min	typ	max	units
capacitive load	5 Vdc output models 9 Vdc output models 12 Vdc output models 15 Vdc output models 24 Vdc output models			2,000 1,340 1,000 800 500	µF µF µF µF µF
initial set point accuracy	at 100% load			±2	%
line regulation	measured at high line to low line at full load			±1	%
load regulation	measured at 10%~100% load			±1	%
start-up time				3	s
hold-up time	at 115 Vac		10		ms
switching frequency			65		kHz
temperature coefficient			±0.05		%/°C

PROTECTIONS

parameter	conditions/description	min	typ	max	units
over voltage protection	hiccup, auto recovery 5 Vdc output models 9 Vdc output models 12 Vdc output models 15 Vdc output models 24 Vdc output models			 6.3 12.6 15.8 18.9 31.5	 Vdc Vdc Vdc Vdc Vdc
short circuit protection	hiccup, auto recovery				

SAFETY & COMPLIANCE

parameter	conditions/description	min	typ	max	units
isolation voltage	input to output for 1 minute	3,000			Vac
isolation resistance		100			MΩ
safety approvals	certified to IEC/EN/UL 62368-1 designed to meet IEC/EN 60335				
safety class	Class II				
conducted emissions	EN55032 2015, EN61000-6-3 2007+A1: 2011+AC: 2012, Class B, 47 CFR FCC Part 15 Subpart B (Class B)				
radiated emissions	EN55032 2015, EN61000-6-3 2007+A1: 2011+AC: 2012, Class B, 47 CFR FCC Part 15 Subpart B (Class B)				
harmonic current emissions	EN61000-3-2:2014				
voltage fluctuations & flicker	EN61000-3-3:2013				
ESD	IEC61000-4-2:2008				
radiated immunity	IEC61000-4-3:2010				
EFT/burst	IEC61000-4-4:2012				
surge	IEC61000-4-5:2014				

SAFETY & COMPLIANCE (CONTINUED)

parameter	conditions/description	min	typ	max	units
conducted immunity	IEC61000-4-6:2013				
power frequency magnetic field	IEC61000-4-8:2009				
voltage dips & interruptions	IEC61000-4-11:2004				
MTBF	as per MIL-HDBK-217F, at 115 Vac, 25°C, GB 5 Vdc output model 9 Vdc output model 12 Vdc output model 15 Vdc output model 24 Vdc output model		 580,000 870,000 660,000 740,000 620,000		 hours hours hours hours hours
RoHS	yes				

Notes: 4. The power supply is considered a component which will be installed into final equipment. The final equipment still must be tested to meet the necessary EMC directives.

ENVIRONMENTAL

parameter	conditions/description	min	typ	max	units
operating temperature	see derating curves	-40		75	°C
storage temperature		-40		85	°C
operating humidity	non-condensing			93	%
altitude				5,000	m
vibration	as per MIL-STD-810F Table 514.5C-VIII; 15~2000 Hz for 1 hour on each axis for 3 hours		4		G
shock	as per MIL-STD-810F Table 516.5, Table 516.5-1; for 10 ms on each axis 3 times		75		G

DERATING CURVES

Load vs. Ambient Temperature
(natural convection)

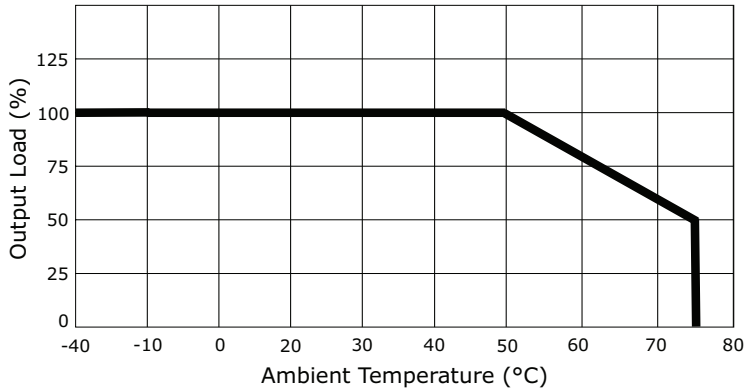

MECHANICAL

parameter	conditions/description	min	typ	max	units
dimensions	1.600 x 1.100 x 0.772 (40.64 x 27.94 x 19.60 mm)				inches
weight			40		g

MECHANICAL DRAWING

units: inch [mm]
tolerance: ±0.020[±0.50]

PIN CONNECTIONS	
PIN	Function
1	AC (N)
2	AC (L)
3	-Vo
4	+Vo

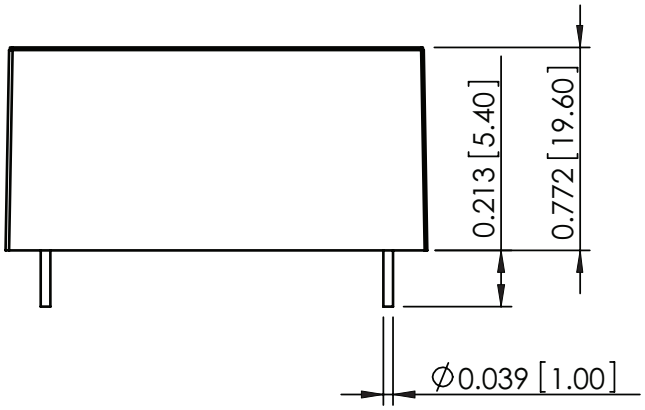

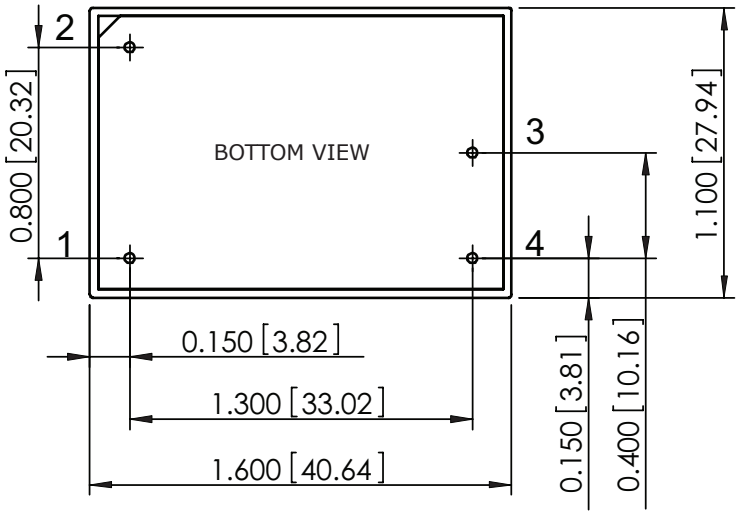

INSTALLATION INSTRUCTIONS

The mounting holes should all be 1.5 mm in diameter. A minimum of 4 mm clearance is required for all four sides of the unit and a minimum of 5 mm clearance is required above the top surface of the unit.

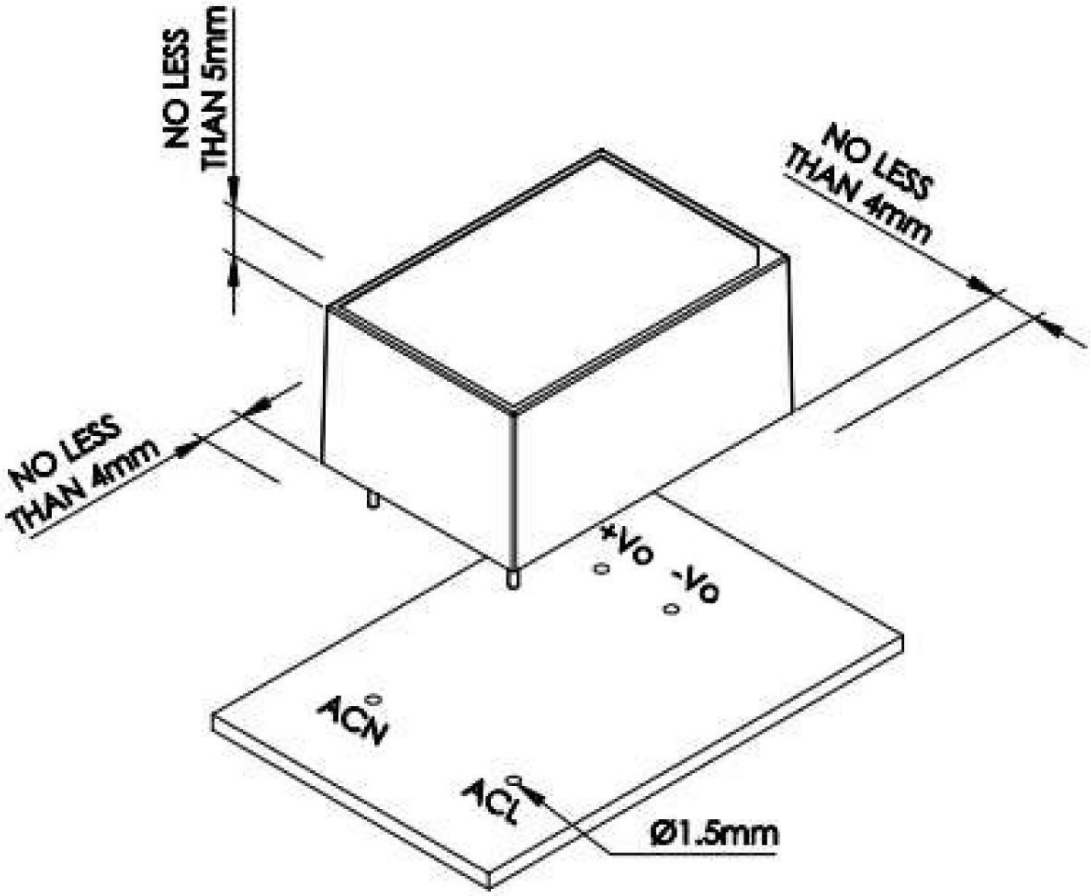

REVISION HISTORY

rev.	description	date
1.0	initial release	02/13/2020

The revision history provided is for informational purposes only and is believed to be accurate.

CUI INC
a bel group

Headquarters
20050 SW 112th Ave.
Tualatin, OR 97062
800.275.4899

Fax 503.612.2383
cui.com
techsupport@cui.com

CUI offers a two (2) year limited warranty. Complete warranty information is listed on our website.

CUI reserves the right to make changes to the product at any time without notice. Information provided by CUI is believed to be accurate and reliable. However, no responsibility is assumed by CUI for its use, nor for any infringements of patents or other rights of third parties which may result from its use.

CUI products are not authorized or warranted for use as critical components in equipment that requires an extremely high level of reliability. A critical component is any component of a life support device or system whose failure to perform can be reasonably expected to cause the failure of the life support device or system, or to affect its safety or effectiveness.