PN5331B3HN

Near Field Communication (NFC) controller

Rev. 3.4 — 29 November 2017
157534

Product data sheet
COMPANY PUBLIC

1. General description

The PN533 is a highly integrated transceiver module for contactless communication at 13.56 MHz based on the 80C51 microcontroller core. It supports 6 different operating modes:

- ISO/IEC 14443A/MIFARE Reader/Writer
- FeliCa Reader/Writer
- ISO/IEC 14443B Reader/Writer
- ISO/IEC 14443A/MIFARE Card MIFARE 1 KB or MIFARE 4 KB emulation
- FeliCa Card emulation
- ISO/IEC 18092, ECMA 340 Peer-to-Peer

The PN533 implements a demodulator and decoder for signals from ISO/IEC 14443A/MIFARE compatible cards and transponders. The PN533 handles the complete ISO/IEC 14443A framing and error detection (Parity & CRC).

The PN533 supports MIFARE 1 KB or MIFARE 4 KB emulation products. The PN533 supports contactless communication using MIFARE Higher transfer speeds up to 424 kbit/s in both directions.

The PN533 can demodulate and decode FeliCa coded signals. The PN533 handles the FeliCa framing and error detection. The PN533 supports contactless communication using FeliCa Higher transfer speeds up to 424 kbit/s in both directions.

The PN533 supports layers 2 and 3 of the ISO/IEC 14443 B Reader/Writer communication scheme, except anticollision. This must be implemented in firmware as well as upper layers.

In card emulation mode, the PN533 is able to answer to a Reader/Writer command either according to the FeliCa or ISO/IEC 14443A/MIFARE card interface scheme. The PN533 generates the load modulation signals, either from its transmitter or from the LOADMOD pin driving an external active circuit. A complete secure card functionality is only possible in combination with a secure IC using the NFC-WI/S^{2}C interface.

Compliant to ECMA 340 and ISO/IEC 18092 NFCIP-1 Passive and Active communication modes, the PN533 offers the possibility to communicate to another NFCIP-1 compliant device, at transfer speeds up to 424 kbit/s.The PN533 handles the complete NFCIP-1 framing and error detection.

The PN533 transceiver can be connected to an external antenna for Reader/Writer or Card/PICC modes, without any additional active component.

The PN533 supports the following host interfaces:

- USB 2.0 full speed interface (bus powered or non bus powered)
- High Speed UART (HSU)

PN533 has also a master I^2C interface enabling the drive on an I^2C peripheral (i.e. memory).

In addition, a power switch is included to supply power to a secure IC.

All information provided in this document is subject to legal disclaimers.

© NXP B.V. 2017. All rights reserved.

2. Features and benefits

- 80C51 microcontroller core with 45056 bytes ROM and 1224 bytes RAM
- Highly integrated demodulator and decoder
- Buffered output drivers to connect an antenna with minimum number of external components
- Integrated RF level detector
- Integrated data mode detector
- Supports ISO/IEC 14443A/MIFARE
- Supports ISO/IEC 14443B (Reader/Writer mode only)
- Typical operating distance in Reader/Writer mode for communication to ISO/IEC 14443A/MIFARE, ISO/IEC 14443B or FeliCa cards up to 50 mm depending on antenna size and tuning
- Typical operating distance in NFCIP-1 mode up to 50 mm depending on antenna size, tuning and power supply
- Typical operating distance in ISO/IEC 14443A/MIFARE or FeliCa card emulation mode of approximately 100 mm depending on antenna size, tuning and external field strength
- Supports MIFARE 1 KB or MIFARE 4 KB emulation encryption in Reader/Writer mode and MIFARE higher transfer speed communication at 212 kbit/s and 424 kbit/s
- Supports contactless communication according to the FeliCa protocol at 212 kbit/s and 424 kbit/s
- Integrated RF interface for NFCIP-1 up to 424 kbit/s
- Possibility to communicate on the RF interface above 424 kbit/s using external analog components
- Supported host interfaces
  - USB 2.0 full speed interface
  - High-speed UART
- Restricted I^2C master interface to control an external I2C EEPROM
- Dedicated host interrupts
- Low power modes
  - Hard-Power-down mode
  - Soft-Power-down mode
- Automatic wake-up on HSU interfaces when device is in Power-down mode
- Programmable timers
- 27.12 MHz Crystal oscillator
- On-Chip PLL to generate internally The 96 MHz for the USB interface
- Power modes
  - USB bus power mode
  - 2.5 V to 3.6 V power supply operating range in non USB bus power mode
- Power switch for external secure companion chip
- Dedicated IO ports for external device control
- Integrated antenna detector for production tests
- ECMA 373 NFC-WI interface to connect an external secure IC

All information provided in this document is subject to legal disclaimers.

© NXP B.V. 2017. All rights reserved.

3. Applications

- Computing application
- Consumer applications

4. Quick reference data

Table 1. Quick reference data

Symbol	Parameter	Conditions		Min	Typ	Max	Unit
V_{BUS}	USB Supply Voltage (USB mode)			4.02	5	5.25	V
	Supply Voltage (non USB mode)	V_{BUS} = $D_{VDD}V_{SS}$ = 0 V		2.5	3.3	3.6	V
T_{VDD}, A_{VDD}, D_{VDD}	Supply Voltage	T_{VDD} = A_{VDD} = D_{VDD} V_{SS} = 0 V	[1]	2.5	3.3	3.6	V
P_{VDD}	Supply Voltage for host interface	V_{SS} = 0 V		1.6		3.6	V
S_{VDD}	Supply Voltage for SAM interface	V_{SS} = 0 V (SV_{DD} Switch Enabled)		DV_{DD} -0.1		DV_{DD}	V
I_{VBUS}	Maximum load current (USB mode)	measured on V_{BUS}				150	mA
	Maximum Inrush current limitation	At power up(curlimoff = 0)				100	mA
I_{HPD}	Hard Power Down Current (Not powered from USB)	A_{VDD} = D_{VDD} = T_{VDD} = P_{VDD} = 3 V, RF level detector off				10	µA
I_{SPD}	Soft Power down Current(Not powered from USB)	A_{VDD} = D_{VDD} = T_{VDD} = P_{VDD} = 3 V, RF level detector on				30	µA
$I_{suspend}$	USB suspend Current	A_{VDD} = D_{VDD} = T_{VDD} = P_{VDD} = 3 V, RF level detector on (without resistor on DP/DM)				250	µA
I_{DVDD}	Digital Supply Current	A_{VDD} = D_{VDD} = T_{VDD} = P_{VDD} = 3 V, RF level detector on, S_{VDD} switch off	[1]		15		mA
I_{SVDD}	S_{VDD} Supply Current	S_{VDD} = 3 V, S_{VDD} switch On				30	mA
I_{AVDD}	Analog Supply Current	A_{VDD} = D_{VDD} = T_{VDD} = P_{VDD} = 3 V, RF level detector on			6		mA
I_{TVDD}	Transmitter Supply Current	During RF Transmission, TVDD=3V			60	100	mA
P_{tot}	continuous total power dissipation.	T_{amb} = -30 to +85 °C				0.55	W
T_{amb}	operating ambient temperature			-30		+85	°C

[1] D_{VDD}, A_{VDD} and T_{VDD} shall always be at the same supply voltage.

All information provided in this document is subject to legal disclaimers.

© NXP B.V. 2017. All rights reserved.

5. Ordering information

Table 2. Ordering information

Type number	Package		
	Name	Description	Version
PN5331B3HN/C270[1]	HVQFN40	Heatsink Very thin Quad Flat package; 40 pins, plastic, body 6 x 6 x 0.85 mm; leadless; MSL level 2.	SOT618-1

[1] Refer to Section 17.4 “Licenses”

6. Block diagram

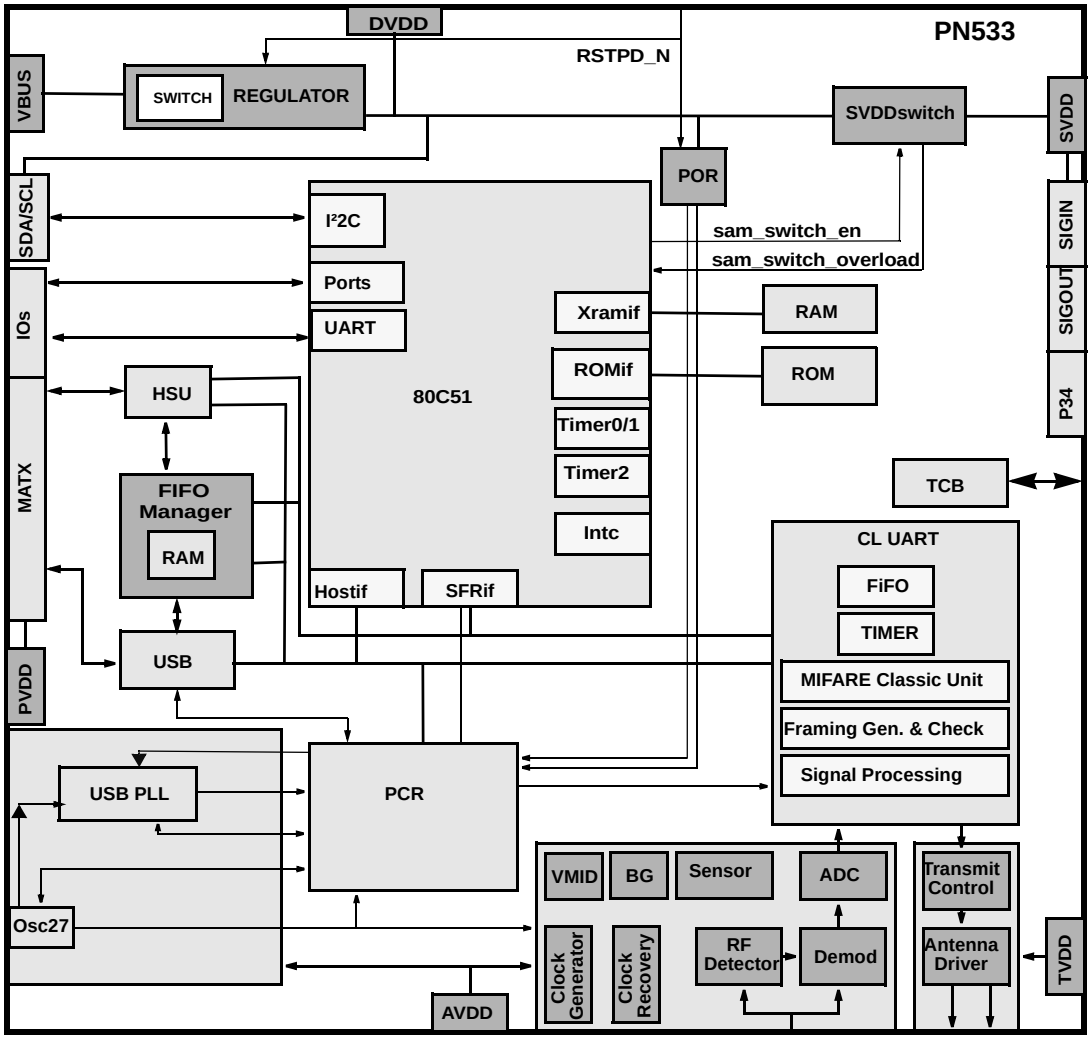

Fig 1. Block diagram of PN533

All information provided in this document is subject to legal disclaimers.

© NXP B.V. 2017. All rights reserved.

7. Pinning information

7.1 Pinning

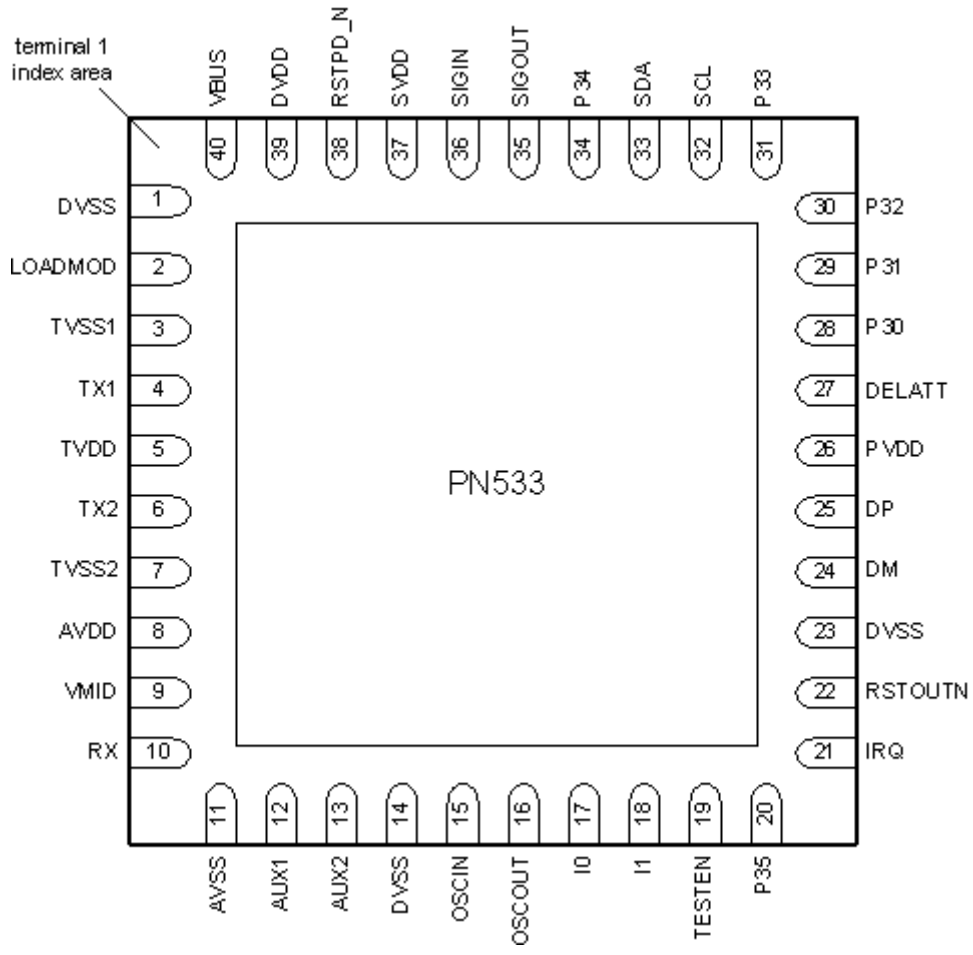

Fig 2. Pin configuration for HVQFN 40 (SOT618-1)

All information provided in this document is subject to legal disclaimers.

© NXP B.V. 2017. All rights reserved.

7.2 Pin description

Table 3. PN533 Pin description

Symbol	Pin	Type	Pad Ref Voltage	Description
DVSS	1	PWR		Digital ground
LOADMOD	2	O	DVDD	Load Modulation output provides digital signal for FeliCa and MIFARE card operating mode
TVSS1	3	PWR		Transmitter ground: supplies the output stage of TX1 and TX2
TX1	4	O	TVDD	Transmitter 1: transmits modulated 13.56 MHz energy carrier
TVDD	5	PWR		Transmitter power supply: supplies the output stage of TX1 and TX2
TX2	6	O	TVDD	Transmitter2: delivers the modulated 13.56 MHz energy carrier
TVSS2	7	PWR		Transmitter ground: supplies the output stage of TX1 and TX2
AVDD	8	PWR		Analog power supply
VMID	9	PWR	AVDD	Internal reference voltage: This pin delivers the internal reference voltage.
RX	10	I	AVDD	Receiver Input: Input pin for the reception signal, which is the load modulated 13.56 MHZ energy carrier from the antenna circuit
AVSS	11	PWR		Analog ground
AUX1	12	O	DVDD	Auxiliary output 1: This pin delivers analog and digital test signals
AUX2	13	O	DVDD	Auxiliary output 2: This pin delivers analog and digital test signals
DVSS	14	PWR		Digital Ground
OSCIN	15	I	AVDD	Crystal Oscillator Input: input to the inverting amplifier of the oscillator. This pin is also the input for an externally generated clock (fosc = 27.12 MHZ).
OSCOUT	16	O	AVDD	Crystal Oscillator output: Output of the inverting amplifier of the oscillator.
I0	17	I	DVDD	Interface mode lines: selects the used host interface (refer to Table 75 “Config I0_I1 register (address 6103h) bit allocation”for details). In test mode I0 is used as test signals.
I1	18	I	DVDD	
TESTEN	19	I	DVDD	Test enable pin: When set to 1 enable the test mode. When set to 0 reset the TCB and disable the access to the test mode.
P35	20	IO	DVDD	General purpose IO signal
P70_IRQ	21	IO	PVDD	Interrupt request: Output to signal an interrupt event to the host (Port 7 bit 0)
RSTOUT	22	O	PVDD	Output reset signal. When Low it indicates that the circuit is in reset state.
DVSS	23	PWR		Digital Ground
DM	24	IO	PVDD	USB D- data line in USB mode or TX in HSU mode (refer to Table 74 “HOST interface selection” on page 47for details). In test mode this signal is used as input and output test signal
DP	25	IO	PVDD	USB D+ data line in USB mode or RX in HSU mode (refer to Table 74 “HOST interface selection” on page 47 for details). In test mode this signal is used as input and output test signal.
PVDD	26	PWR		IO pad power supply
DELATT	27	O	PVDD	Optional output for an external 1.5 KOhms resistor connection on D+.
P30	28	IO	PVDD	General purpose IO signal. Can be configured to act either as RX line of the second serial interface UART or general purpose IO. In test mode this signal is used as input and output test signal.

All information provided in this document is subject to legal disclaimers.

© NXP B.V. 2017. All rights reserved.

Table 3. PN533 Pin description *…continued*

Symbol	Pin	Type	Pad Ref Voltage	Description
P31	29	IO	PVDD	General purpose IO signal. Can be configured to act either as TX line of the second serial interface UART or general purpose IO. In test mode this signal is used as input and output test signal.
P32_INT0	30	IO	PVDD	General purpose IO signal. Can also be used as an interrupt source In test mode this signal is used as input and output test signal.
P33_INT1	31	IO	PVDD	General purpose IO signal. Can be used to generate an HZ state on the output of the selected interface for the Host communication and to enter into power down mode without resetting the internal state of PN533. In test mode this signal is used as input and output test signal.
SCL	32	IO	DVDD	I^2C clock line - open drain in output mode
SDA	33	IO	DVDD	I^2C data line - open drain in output mode
P34	34	IO	SVDD	General purpose IO signal or clk signal for the SAM
SIGOUT	35	O	SVDD	Contactless communication interface output: delivers a serial data stream according to NFCIP-1 and output signal for the SAM. In test mode this signal is used as test signal output.
SIGIN	36	I	SVDD	Contactless communication interface input: accepts a digital, serial data stream according to NFCIP-1 and input signal from the SAM. In test mode this signal is used as test signal input.
SVDD	37	PWR		Output power for SAM power supply. Switched on by Firmware with an overload detection. Used as a reference voltage for SAM communication.
RSTPD_N	38	I	PVDD	Reset and Power Down: When LOW, internal current sources are switched off, the oscillator is inhibited, and the input pads are disconnected from the outside world. With a negative edge on this pin the internal reset phase starts.
DVDD	39	PWR		Digital Power Supply
VBUS	40	PWR		USB power supply.

All information provided in this document is subject to legal disclaimers.

© NXP B.V. 2017. All rights reserved.

8. Functional description

8.1 80C51

The PN533 is controlled via an embedded 80C51 microcontroller core (for more details http://www.standardics.nxp.com/support/documents/microcontrollers/?scope=80C51). Its principle features are listed below:

- 6-clock cycle CPU. One machine cycle comprises 6 clock cycles or states (S1 to S6). An instruction needs at least one machine cycle.
- ROM interface
- RAM interface to embedded IDATA and XRAM memories (see Figure 4 on page 10)
- Peripheral interface (PIF)
- Power control module to manage the CPU power consumption
- Clock module to control CPU clock during Shutdown and Wake-up modes
- Port module interface to configure I/O pads
- Interrupt controller
- Three timers
- Debug UART

The block diagram describes the main blocks described in this 80C51 section.

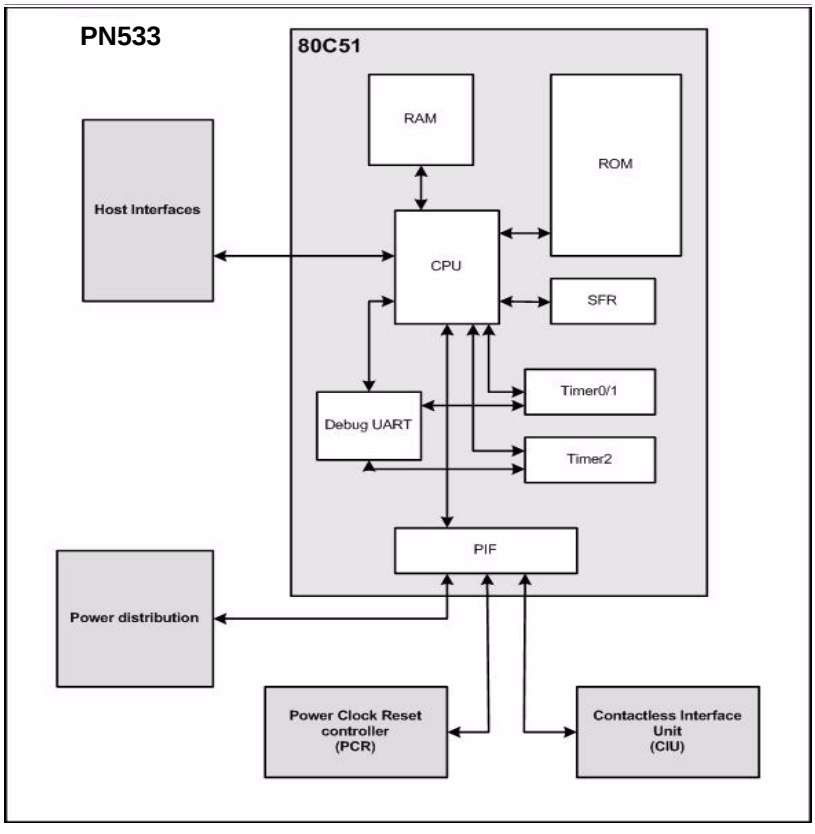

Fig 3. PN533 80C51 block description

All information provided in this document is subject to legal disclaimers.

© NXP B.V. 2017. All rights reserved.

8.1.1 PN533 memory map

The memory map of PN533 is composed of 2 main memory spaces: data memory and program memory. The following figure illustrates the structure.

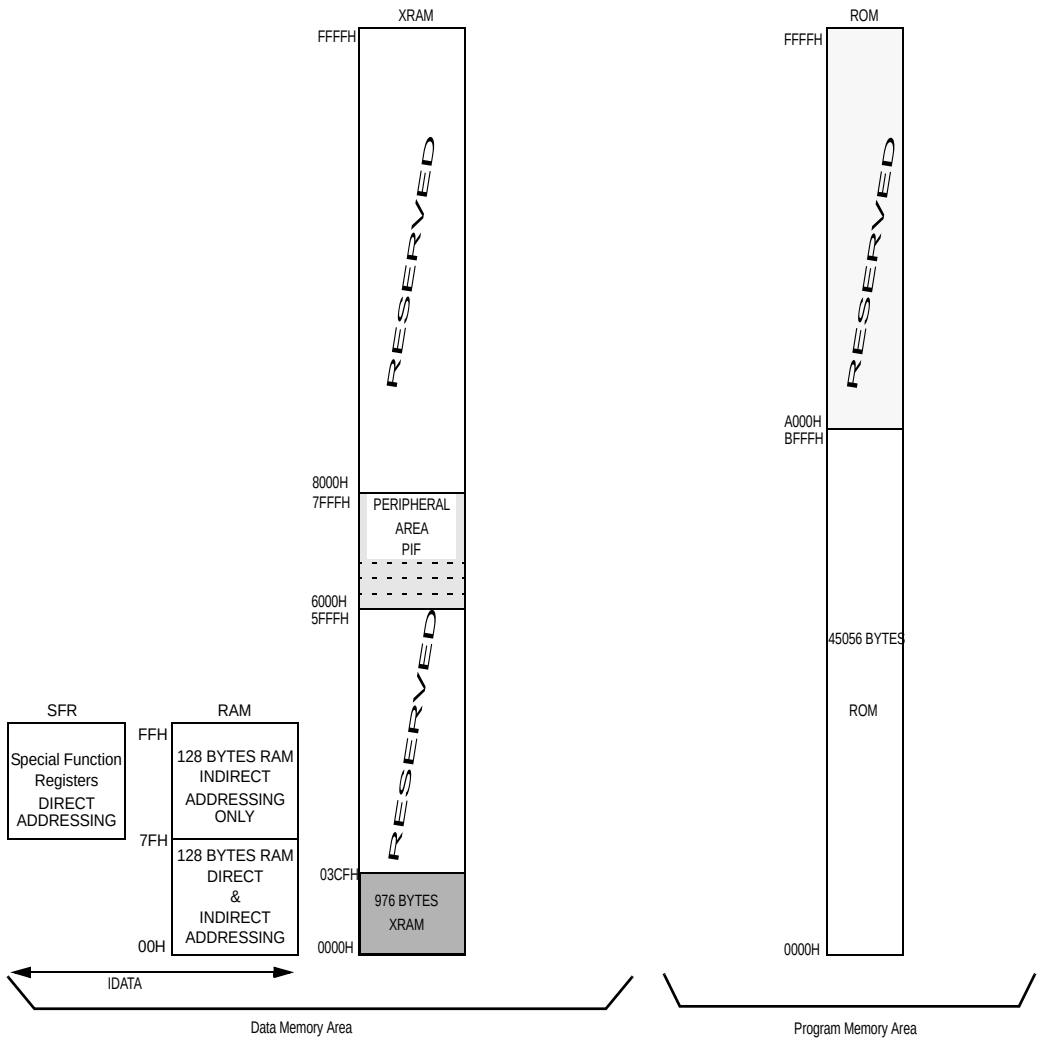

Fig 4. PN533 memory map overview

All information provided in this document is subject to legal disclaimers.

© NXP B.V. 2017. All rights reserved.

8.1.2 Data memory

Data memory is itself divided into 2 spaces:

- 384-byte IDATA with byte-wide addressing
  - 258-byte RAM
  - 128-byte SFR
- 1 bank of 64 KB extended RAM (XRAM) with 2-byte-wide addressing

8.1.2.1 IDATA memory

The IDATA memory is mapped into 3 blocks, which are referred as Lower IDATA RAM, Upper IDATA RAM, and SFR. Addresses to these blocks are byte-wide, which implies an address space of only 256 bytes. However, 384 bytes can be addressed within IDATA memory through the use of direct and indirect address mechanisms.

- Direct addressing: the operand is specified by an 8-bit address field in the instruction.
- Indirect addressing: the instruction specifies a register where the address of the operand is stored.

For the range 80h to FFh, direct addressing will access the SFR space; indirect addressing accesses Upper IDATA RAM. For the range 00h to 7Fh, Lower IDATA RAM is accessed, regardless of addressing mode. This behavior is summarized in the table below:

Table 4. IDATA memory addressing

Address	Addressing mode	
	Direct	**Indirect**
00h to 7Fh	Lower IDATA RAM	Lower IDATA RAM
80h to FFh	SFRs	Upper IDATA RAM

The SFRs and their addresses are described in the Table 5:

All information provided in this document is subject to legal disclaimers.

© NXP B.V. 2017. All rights reserved.

Table 5. SFR map of NFC controller

Address	Bit-addressable	Byte-addressable							Address
F8h	IP1		XRAMP		P3CFGA	P3CFGB			FFh
F0h	B				P7CFGA	P7CFGB		P7	F7h
E8h	IE1	CIU_Status2	CIU_FIFOData	CIU_FIFOLevel	CIU_WaterLevel	CIU_Control	CIU_BitFraming	CIU_Coll	EFh
E0h	ACC								E7h
D8h	I^2CC0N	I^2CSTA	I^2CDAT	I^2CADR				CIU_Status1	DFh
D0h	PSW	CIU_Command	CIU_CommIEn	CIU_DivIEn	CIU_CommIrq	CIU_DivIrq	CIU_Error		D7h
C8h	T2CON	T2MOD	RCAP2L	RCAP2H	T2L	T2H			CFh
C0h									C7h
B8h	IP0								BFh
B0h	P3								B7h
A8h	IE0			HSU_STA	HSU_CTR	HSU_PRE	HSU_CNT		AFh
A0h		FITEN	FDATA	FSIZE					A7h
98h	S0CON	SBUF	RWL	TWL	FIFOFS	FIFOFF	SFF	FIT	9Fh
90h									97h
88h	T01CON	T01MOD	T0L	T1L	T0H	T1H			8Fh
80h		SP	DPL	DPH				PCON	87h

All information provided in this document is subject to legal disclaimers.

© NXP B.V. 2017. All rights reserved.

8.1.2.2 XRAM memory

The XRAM memory is divided into 2 memory spaces:

- 0000h to 5FFFh: reserved for addressing embedded RAM. For the PN533, only accesses between 0000h and 03C7h are valid.
- 6000h to 7FFFh: reserved for addressing embedded peripherals. This space is divided into 32 regions of 256 bytes each. Addressing can be performed using R0 or R1 and the XRAMP SFR.

The Table 6 depicts the mapping of internal peripherals into XRAM.

Table 6. Peripheral mapping into XRAM memory space

Base Address	End Address	Description
6000h	60FFh	Reserved.
6100h	61FFh	IOs and miscellaneous registers configuration Refer to Section 8.2 “General purpose IOs configurations” on page 37
6200h	62FFh	Power Clock and Reset controller Refer to Section 8.5.10 “PCR extension registers” on page 102
6300h	633Fh	Contactless Unit Interface Refer to Section 8.6 “Contactless Interface Unit (CIU)” on page 108
6340h	FFFFh	Reserved

XRAM is accessed via the dedicated MOVX instructions. There are two access modes:

- 16-bit data pointer (DPTR): the full XRAM address space can be accessed.
- paging mechanism: the upper address byte is stored in the SFR register XRAMP; the lower byte is stored in either R1 or R0.

The Figure 5 illustrates both mechanisms.

All information provided in this document is subject to legal disclaimers.

© NXP B.V. 2017. All rights reserved.

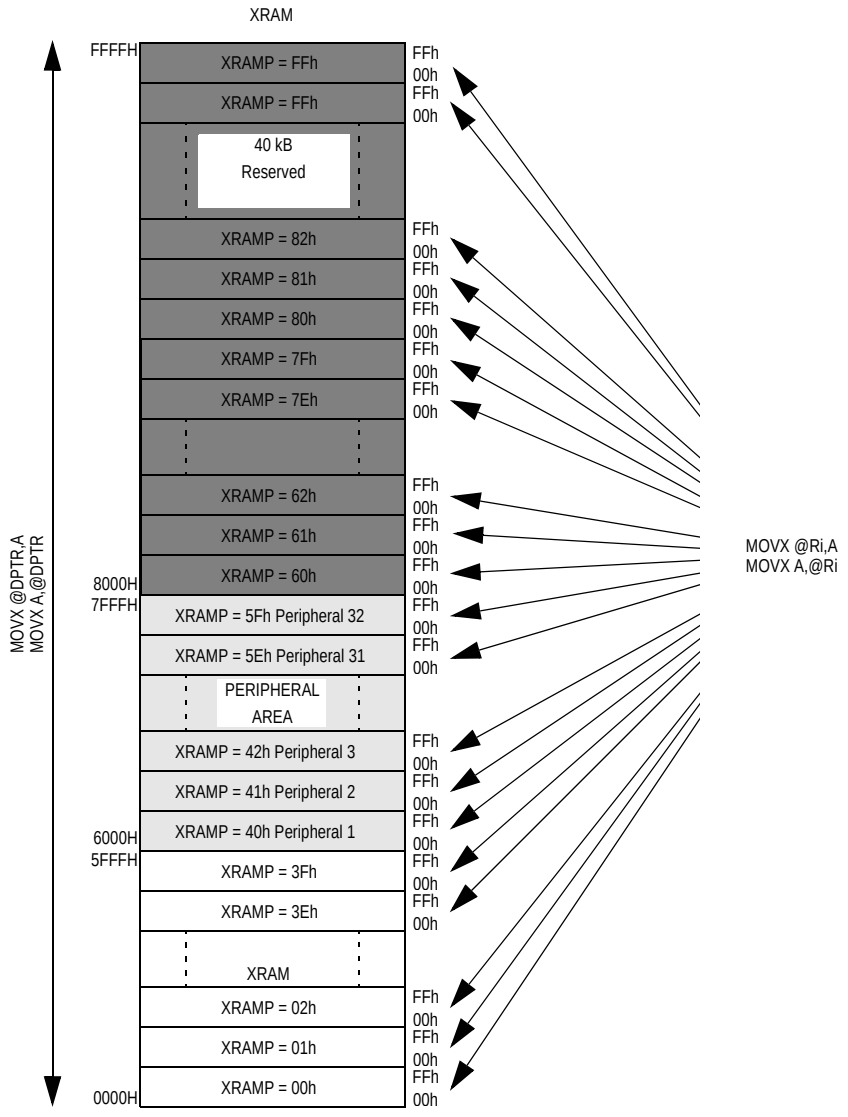

Fig 5. Indirect addressing of XRAM memory space

8.1.3 Program memory

PN533 program memory ranges from 0000h to AFFFh, which is physically mapped to the 44 KB ROM.

All information provided in this document is subject to legal disclaimers.

© NXP B.V. 2017. All rights reserved.

8.1.4 PCON module

The Power Control (PCON) module is configured using the PCON SFR register.

Table 7. PCON register (SFR: address 87h) bit allocation

Bit	7	6	5	4	3	2	1	0
Symbol	SMOD	-					CPU_PD	-
Reset	0	0	0	0	0	0	0	0
Access	R/W	R	R	R	R	R	R/W	R/W

Table 8. Description of PCON bits

Bit	Symbol	Description
7	SMOD	**Serial MODe:** When set to logic level 1, the baud rate of the Debug UART is doubled
6 to 2	-	Reserved.
1	CPU_PD	**Power-down:** When set to logic level 1, the microcontroller goes in Power-down mode
0	Reserved	**This bit should only ever contain logic level 0.**

8.1.5 Interrupt Controller

The interrupt controller has the following features:

- 1interrupt source
- Interrupt enable registers IE0 and IE1
- Interrupt priority registers IP0 and IP1
- Wake-up from Power-down state

8.1.5.1 Interrupt vectors

The mapping between interrupt sources and interrupt vectors is shown in Table 9.

Table 9. Interrupt vector

Interrupt number	Interrupt vector	Interrupt sources	Incremental priority level (conflict resolution level)
0	0003h	External P32_INT0	Highest
1	000Bh	Timer0 interrupt	
2	0013h	External P33_INT1	
3	001Bh	Timer1 interrupt	
4	0023h	Debug UART interrupt	
5	002Bh	Timer2 interrupt	
6	0033h	NFC-WI interrupt	
7	003Bh	Reserved	
8	0043h	Reserved	
9	004Bh	CIU interrupt 1	
10	0053h	CIU interrupt 0	
11	005Bh	I^2C interrupt	
12	0063h	FIFO or HSU interrupts	
13	006Bh	USB interrupt	
14	0073h	General Purpose IRQ	Lowest

All information provided in this document is subject to legal disclaimers.

© NXP B.V. 2017. All rights reserved.

8.1.5.2 Interrupt enable: IE0 and IE1 registers

Each interrupt source can be individually enabled or disabled by setting a bit in IE0 or IE1. In register IE0, a global interrupt enable bit can be set to logic level 0 to disable all interrupts at once.

The 2 following tables describe IE0.

Table 10. Interrupt controller IE0 register (SFR: address A8h) bit allocation

Bit	7	6	5	4	3	2	1	0
Symbol	IE0_7	IE0_6	IE0_5	IE0_4	IE0_3	IE0_2	IE0_1	IE0_0
Reset	0	0	0	0	0	0	0	0
Access	R/W	R/W	R/W	R/W	R/W	R/W	R/W	R/W

Table 11. Description of IE0 bits

Bit	Symbol	Description
7	IE0_7	**Global interrupt enable** When set to logic 1, the interrupts can be enabled. When set to logic 0, all the interrupts are disabled.
6	IE0_6	**NFC-WI counter interrupt enable** When set to logic 1, NFC-WI interrupt is enabled.
5	IE0_5	**Timer2 interrupt enable** When set to logic 1, Timer2 interrupt is enabled.
4	IE0_4	**Debug UART interrupt enable** When set to logic 1, Debug UART interrupt is enabled.
3	IE0_3	**Timer1 interrupt enable** When set to logic 1, Timer1 interrupt is enabled
2	IE0_2	**P33_INT1 interrupt enable** When set to logic 1, P33_INT1 pin interrupt is enabled. The polarity of P33_INT1 can be inverted (see Table 75 on page 47).
1	IE0_1	**Timer0 interrupt enable** When set to logic 1, Timer0 interrupt is enabled.
0	IE0_0	**P32_INT0 interrupt enable** When set to logic 1, P32_INT0 pin interrupt is enabled.

All information provided in this document is subject to legal disclaimers.

© NXP B.V. 2017. All rights reserved.

The 2 following tables describe IE1.

Table 12. Interrupt controller IE1 register (SFR: address E8h) bit allocation

Bit	7	6	5	4	3	2	1	0
Symbol	IE1_7	IE1_6	IE1_5	IE1_4	IE1_3	IE1_2	-	-
Reset	0	0	0	0	0	0	0	0
Access	R/W	R/W	R/W	R/W	R/W	R/W	R/W	R/W

Table 13. Description of IE1 bits

Bit	Symbol	Description
7	IE1_7	**General purpose IRQ interrupt enable**. When set to logic 1, enables interrupt function of P34, P35, P50_SCL and P71 according to their respective enable and level control bits. See Table 19 on page 19, Table 138 on page 104 and Table 144 on page 107.
6	IE1_6	**USB interrupt enable**. When set to logic level 1, enables USB interrupt.
5	IE1_5	**FIFO and HSU interrupt enable**. When set to logic 1, enables FIFO interrupts, SPI interrupts, HSU interrupt.
4	IE1_4	**I2C interrupt enable**. When set to logic 1, enables I^2C interrupt.
3	IE1_3	**CIU interrupt 0 enable**. When set to logic 1, enables CIU interrupt 0: CIU_IRQ_0.
2	IE1_2	**CIU interrupt 1 enable.** When set to logic 1, enables the CIU interrupt 1: CIU_IRQ_1.
1 to 0	-	Reserved. **This bit must be set to logic level 0.**

8.1.5.3 Interrupt prioritization: IP0 and IP1 registers

Each interrupt source can be individually programmed to be one of two priority levels by setting or clearing a bit in the interrupt priority registers IP0 and IP1. If two interrupt requests of different priority levels are received simultaneously, the request with the high priority is serviced first. On the other hand, if the interrupts are of the same priority, precedence is resolved by comparing their respective conflict resolution levels (see

Table 9 on page 15

for details). The processing of a low priority interrupt can be interrupted by one with a high priority.

A RETI (Return From Interrupt) instruction jumps to the address immediately succeeding the point at which the interrupt was serviced. The instruction found at the return address will be executed, prior to servicing any pending interrupts.

All information provided in this document is subject to legal disclaimers.

© NXP B.V. 2017. All rights reserved.

The 2 following tables describe IP0.

Table 14. Interrupt controller IP0 register (SFR: address B8h) bit allocation

Bit	7	6	5	4	3	2	1	0
Symbol	IP0_7	IP0_6	IP0_5	IP0_4	IP0_3	IP0_2	IP0_1	IP0_0
Reset	0	0	0	0	0	0	0	0
Access	R/W	R/W	R/W	R/W	R/W	R/W	R/W	R/W

Table 15. Description of IP0 bits

Bit	Symbol	Description
7	IP0_7	Reserved
6	IP0_6	When set to logic level 1, NFC-WI interrupt is set to high priority.
5	IP0_5	When set to logic level 1, Timer2 interrupt is set to high priority.
4	IP0_4	When set to logic level 1, Debug UART interrupt is set to high priority.
3	IP0_3	When set to logic level 1, Timer1 interrupt is set to high priority.
2	IP0_2	When set to logic level 1, external P33_INT1 pin is set to high priority.
1	IP0_1	When set to logic level 1, Timer0 interrupt is set to high priority.
0	IP0_0	When set to logic level 1, external P32_INT0 pin is set to high priority.

The 2 following tables describe IP1.

Table 16. Interrupt controller IP1 register (SFR: address F8h) bit allocation

Bit	7	6	5	4	3	2	1	0
Symbol	IP1_7	IP1_6	IP1_5	IP1_4	IP1_3	IP1_2	-	
Reset	0	0	0	0	0	0	00	
Access	R/W	R/W	R/W	R/W	R/W	R/W	R/W	

Table 17. Description of IP1 bits

Bit	Symbol	Description
7	IP1_7	When set to logic level 1, General Purpose IRQ interrupt is set to high priority.
6	IP1_6	When set to logic level 1, USB interrupt is set to high priority.
5	IP1_5	When set to logic level 1, combined FIFO and HSU interrupt is set to high priority.
4	IP1_4	When set to logic level 1, I^2C interrupt is set to high priority.
3	IP1_3	When set to logic level 1, CIU interrupt 0 is set to high priority.
2	IP1_2	When set to logic level 1, CIU interrupt 1 is set to high priority.
1	-	**Reserved. This bit must be set to logic level 0.**
0	IP1_0	When set to logic level 1, interrupt number 7 is set to high priority.

All information provided in this document is subject to legal disclaimers.

© NXP B.V. 2017. All rights reserved.

8.1.5.4 General purpose IRQ control

The general purpose interrupts are controlled by register GPIRQ.

NOTE: this is not a standard feature of the 8051.

Table 18. GPIRQ register (address 6107h) bit allocation

Bit	7	6	5	4	3	2	1	0
Symbol	gpirq_level_P71	gpirq_level_DP	gpirq_level_P35	gpirq_level_P34	gpirq_enable_P71	gpirq_enable_DP	gpirq_enable_P35	gpirq_enable_P34
Reset	0	0	0	0	0	0	0	0
Access	R/W	R/W	R/W	R/W	R/W	R/W	R/W	R/W

Table 19. Description of GPIRQ bits

Bit	Symbol	Description
7	-	
6	gpirq_level_DP	**Configures the polarity of signal on P50 to generate a GPIRQ interrupt event (assuming gpirq_enable_P50 is set).** When set to logic 0, an interrupt will be generated if P50_SCL is at logic 0. When set to logic 1, an interrupt will be generated if P50_SCL is at logic 1.
5	gpirq_level_P35	**Configures the polarity of signal on P35 to generate a GPIRQ interrupt event (assuming gpirq_enable_P35 is set).** When set to logic 0, an interrupt will be generated if P35 is at logic 0. When set to logic 1, an interrupt will be generated if P35 is at logic 1.
4	gpirq_level_P34	**Configures the polarity of signal on P34 to generate a GPIRQ interrupt event (assuming gpirq_enable_P34 is set).** When set to logic 0, an interrupt will be generated if P34 is at logic 0. When set to logic 1, an interrupt will be generated if P34 is at logic 1. **Remark:** If hide_svdd_sig of the register control_rngpower is set and gpirq_enable_P34 is also set then this bit will be asserted independently of the level on the pad P34.
3	-	
2	gpirq_enable_DP	When set to logic 1, enables pad DP to generate a GPIRQ interrupt event.
1	gpirq_enable_P35	When set to logic 1, enables pad P35 to generate a GPIRQ interrupt event.
0	gpirq_enable_P34	When set to logic 1, enables pad P34 to generate a GPIRQ interrupt event.

All information provided in this document is subject to legal disclaimers.

© NXP B.V. 2017. All rights reserved.

8.1.6 Timer0/1 description

Timer0/1 are general purpose timer/counters. Timer0/1 has the following functionality:

- Configurable edge or level detection interrupts
- Timer or counter operation
- 4 timer/counter modes
- Baud rate generation for Debug UART

Timer0/1 comprises two 16-bit timer/counters: Timer0 and Timer1. Both can be configured as either a timer or an event counter.

Each of the timers can operate in one of four modes:

- Mode 0: 13-bit timer/counter
- Mode 1: 16-bit timer/counter
- Mode 2: 8-bit timer/counter with programmable preload value
- Mode 3: two individual 8-bit timer/counters (Timer0 only)

In the ‘timer’ function, the timer/counter is incremented every machine cycle. The count rate is 1/6 of the CPU clock frequency (CPU_CLK).

In the ‘counter’ function, the timer/counter is incremented in response to a 1-to-0 transition on the input pins P34 / SIC_CLK (Timer0) or P35 (Timer1). In this mode, the external input is sampled during state S5 of every machine cycle. If the associated pin is at logic level 1 for a machine cycle, followed by logic level 0 on the next machine cycle, the count is incremented. The new count value appears in the timer/counter in state S3 of the machine cycle following the one in which the transition was detected. The maximum count rate is 1/12 of the CPU_CLK frequency. There are no restrictions on the duty cycle of the external input signal but to ensure that a given level is sampled at least once before it changes, it should be held for at least one full machine cycle.

The overflow output ‘t1_ovf’ of Timer1 can be used as a baud rate generator for the Debug UART. The Timer1 interrupt should be disabled in this case. For most applications which drive the Debug UART, Timer1 is configured for ‘timer’ operation and in auto-reload mode.

All information provided in this document is subject to legal disclaimers.

© NXP B.V. 2017. All rights reserved.

8.1.6.1 Timer0/1 registers

The Timer0/1 module contains six Special Function Registers (SFRs) which can be accessed by the CPU.

Table 20. Timer0/1 Special Function registers list

Name	Size [bytes]	Address Offset	Description	Access
T01CON	1	88h	Timer0/1 control register	R/W
T01MOD	1	89h	Timer0/1 mode register	R/W
T0L	1	8Ah	Timer0 timer/counter lower byte	R/W
T1L	1	8Bh	Timer1 timer/counter lower byte	R/W
T0H	1	8Ch	Timer0 timer/counter upper byte	R/W
T1H	1	8Dh	Timer1 timer/counter upper byte	R/W

The firmware performs a register read in state S5 and a register write in state S6. The hardware loads bits TF0 and TF1 of the register T01CON during state S2 and state S4 respectively. The hardware loads bits IE0 and IE1 of the register T01CON during state S1 and reset these bits during state S2. The registers T0L, T0H, T1L, T1H are updated by the hardware during states S1, S2, S3 and S4 respectively. At the end of a machine cycle, the firmware load has overrided the hardware load as the firmware writes in state S6.

Table 21. Timer0/1 SFR registers CPU state access

		CPU STATE					
Register	**Bit**	**S1**	**S2**	**S3**	**S4**	**S5**	**S6**
T01CON	TF0		HW read			SW read	SW write
	TF1				HW read	SW read	SW write
	IE0/IE1	HW write	HW reset			SW read	SW write
TOL		HW write				SW read	SW write
TOH			HW write			SW read	SW write
T1L				HW write		SW read	SW write
T1H					HW write	SW read	SW write

All information provided in this document is subject to legal disclaimers.

© NXP B.V. 2017. All rights reserved.

8.1.6.2 T01CON register

The register is used to control Timer0/1 and report its status.

Table 22. Timer0/1 T01CON register (SFR address 88h), bit allocation

Bit	7	6	5	4	3	2	1	0
Symbol	TF1	TR1	TF0	TR0	IE1	IT1	IE0	IT0
Reset	0	0	0	0	0	0	0	0
Access	R/W	R/W	R/W	R/W	R/W	R/W	R/W	R/W

Table 23. Description of Timer0/1 T01CON register bits

Bit	Symbol	Description
7	TF1	**Timer1 overflow.** Set to logic level 1 by hardware on a Timer1 overflow. The flag is set to logic level 0 by the CPU after 2 machine cycles.
6	TR1	**Timer1 run control**. Set by firmware only. When set to logic level 1, Timer1 is enabled.
5	TF0	**Timer0 overflow**. Set by hardware on a Timer0 overflow. The flag is set to logic level 0 by the CPU after 2 machine cycles.
4	TR0	**Timer0 run control**. Set by firmware only. When set to logic level 1, Timer0 is enabled.
3	IE1	**External Interrupt1 event**. Set to logic level 1 by hardware when an external interrupt is detected on P33_INT1.
2	IT1	**External Interrupt1 control**. Set by firmware only. When set to logic level 1, Interrupt1 triggers on a falling edge of P33_INT1. When set to logic level 0, Interrupt1 triggers on a low level of P33_INT1.
1	IE0	**External Interrupt0 event**. Set to logic level 1 by hardware when an external interrupt is detected on P32_INT0.
0	IT0	**External Interrupt0 control**. Set by firmware only. When set to logic level 1, Interrupt0 triggered by a falling edge on P32_INT0. When set to logic level 0, Interrupt0 triggered by a low level on P32_INT0.

All information provided in this document is subject to legal disclaimers.

© NXP B.V. 2017. All rights reserved.

8.1.6.3 T01MOD register

This register is used to configure Timer0/1.

Table 24. Timer 0/1 T01MOD register (SFR address 89h), bit allocation

Bit	7	6	5	4	3	2	1	0
Symbol	GATE1	C/T1	M11	M10	GATE0	C/T0	M01	M00
Reset	0	0	0	0	0	0	0	0
Access	R/W	R/W	R/W	R/W	R/W	R/W	R/W	R/W

Table 25. Description of T01MOD bits

Bit	Symbol	Description
7	GATE1	**Timer1 gate control.** Set by firmware only. When set to logic level 1, Timer1 is enabled only when P33_INT1 is high and bit TR1 of register T01CON is set. When set to logic 0, Timer1 is enabled.
6	C/T1	**Timer1 timer/counter selector.** Set by firmware only. When set to logic level 1, Timer1 is set to counter operation. When set to logic level 0, Timer1 is set to timer operation.
5 to 4	M[11:10]	**Timer1 mode.** Set by firmware only. • Mode 0: M11 = 0 and M10 = 0 – 8192 counter – T1L serves as a 5-bit prescaler • Mode 1: M11 = 0 and M10 = 1 – 16-bit timer/counter – T1H and T1L are cascaded • Mode 2: M11 = 1 and M10 = 0 – 8-bit auto-reload timer/counter. – T1H stores value to be reloaded into T1L each time T1L overflows. • Mode 3: M11 = 1 and M10 = 1 – Timer1 is stopped (count frozen).

All information provided in this document is subject to legal disclaimers.

© NXP B.V. 2017. All rights reserved.

Table 25. Description of T01MOD bits *...continued*

Bit	Symbol	Description
3	GATE0	**Timer0 gate control.** Set by firmware only. When set to logic level 1, Timer0 is enabled only when P32_INT0 is high and bit TR0 of register T01CON is set. When set to logic level 0, Timer0 is enabled.
2	C/T0	**Timer0 timer/counter selector.** Set by firmware only. When set to logic level 1, Timer0 is set to counter operation. When set to logic level 0, Timer0 is set to timer operation.
1 to 0	M[01:00]	**Timer0 mode.** Set by firmware only. • Mode 0: M01 = 0 and M00 = 0 – 8192 timer – T0L acts as a 5-bit prescaler. • Mode 1: M01 = 0 and M00 = 1 – 16-bit timer/counter – T0H and T0L are cascaded. • Mode 2: M01 = 1 and M00 = 0 – 8-bit auto-reload timer/counter – T0H stores value to be reloaded into T0L each time T0L overflows. • Mode 3: M01 = 1 and M00 = 1 – Timer0 split into two 8-bit timer/counters T0H and T0L – T0H is controlled by the control bit of Timer1: bit TR1 of register T01CON – T0L is controlled by standard Timer0 control: “{P32_INT0 OR (NOT GATE0)} AND bit TR0”.

8.1.6.4 T0L and T0H registers

These are the actual timer/counter bytes for Timer0: T0L is the lower byte; T0H is the upper byte.

Table 26. Timer0/1 T0L register (SFR address 8Ah), bit allocation

Bit	7	6	5	4	3	2	1	0
Symbol	T0L.7	T0L.6	T0L.5	T0L.4	T0L.3	T0L.2	T0L.1	T0L.0
Reset	0	0	0	0	0	0	0	0
Access	R/W	R/W	R/W	R/W	R/W	R/W	R/W	R/W

Table 27. Description of T0L bits

Bit	Symbol	Description
7:0	T0L.7 to T0L.0	Timer0 timer/counter lower byte

Table 28. Timer0/1 T0H register (SFR address 8Ch), bit allocation

Bit	7	6	5	4	3	2	1	0
Symbol	T0H.7	T0H.6	T0H.5	T0H.4	T0H.3	T0H.2	T0H.1	T0H.0
Reset	0	0	0	0	0	0	0	0
Access	R/W	R/W	R/W	R/W	R/W	R/W	R/W	R/W

Table 29. Description of T0H bits

Bit	Symbol	Description
7 to 0	T0H.7 to T0H.0	Timer0 timer/counter upper byte

All information provided in this document is subject to legal disclaimers.

© NXP B.V. 2017. All rights reserved.

8.1.6.5 T1L and T1H registers

These are the actual timer/counter bytes for Timer1. T1L is the lower byte, T1H is the upper byte.

Table 30. Timer0/1 T1L register (SFR address 8Bh), bit allocation

Bit	7	6	5	4	3	2	1	0
Symbol	T1L.7	T1L.6	T1L.5	T1L.4	T1L.3	T1L.2	T1L.1	T1L.0
Reset	0	0	0	0	0	0	0	0
Access	R/W	R/W	R/W	R/W	R/W	R/W	R/W	R/W

Table 31. Description of T1L bits

Bit	Symbol	Description
7 to 0	T1L.7 to T1L.0	Timer1 timer/counter lower byte

Table 32. Timer0/1 T1H register (SFR address 8Dh), bit allocation

Bit	7	6	5	4	3	2	1	0
Symbol	T1H.7	T1H.6	T1H.5	T1H.4	T1H.3	T1H.2	T1H.1	T1H.0
Reset	0	0	0	0	0	0	0	0
Access	R/W	R/W	R/W	R/W	R/W	R/W	R/W	R/W

Table 33. Description of T1H bits

Bit	Symbol	Description
7 to 0	T1H.7 to T1H.0	Timer1 timer/counter upper byte

8.1.6.6 Incrementer

The two 16-bit timer/counters are built around an 8-bit incrementer. The Timer0/1 are incremented in the CPU states S1 to S4; the overflow flags are set in CPU states S2 and S4.

- CPU state S1: TOL is incremented if Timer0 is set to:
  - timer operation
  - counter operation and when a 1-to-0 transition is detected on P34 / SIC_CLK input.
- CPU state S2: TOH is incremented if:
  - T0L overflows. The overflow flag TF0 in register T01CON is updated.
- CPU state S3: T1L is incremented if Timer1 is set to:
  - timer operation or
  - counter operation and when a 1-to-0 transition is detected on P35 input.
- CPU state S4: T1H is incremented if:
  - T1L overflows. The overflow flag TF1 in register T01CON is updated.

All information provided in this document is subject to legal disclaimers.

© NXP B.V. 2017. All rights reserved.

8.1.6.7 Overflow detection

For both the upper and lower bytes of the Timer0/1, an overflow is detected by comparing the incremented value of the most significant bit with its previous value. An overflow occurs when this bit changes from logic level 1 to logic level 0. An overflow event in the lower byte is clocked into a flip-flop and is used in the next state as the increment enable for the upper byte. An overflow event in the upper byte will set the corresponding overflow bit in the T01CON register to logic level 1. The upper byte overflow is also clocked into a flip-flop to generate the output signals ‘t0_ovf’ and ‘t1_ovf’.

The overflow flags TF0 and TF1, found in register T01CON, are loaded during states S2 and S4 respectively. The interrupt controller of the 80C51 scans all requests at state S2. Thus, an overflow of Timer0 or Timer1 is detected one machine cycle after it occurred. When the request is serviced, the interrupt routine sets the overflow flag to logic 0.

Execution of the interrupt routine starts on the fourth machine cycles following the timer overflow. When Timer0/1 receives the acknowledge from the CPU:

- the overflow flag TF0 in register T01CON is set to logic level 0
- two machine cycles later, the overflow flag TF1 in register T01CON is set to logic level 0

If during the same machine cycle, an overflow flag is set to logic level 0 due to a CPU acknowledge and set to logic level 1 due to an overflow, the set to logic level 1 is the strongest.

8.1.7 Timer2 description

Timer2 supports a subset of the standard Timer2 found in the 8052 microcontroller. Timer2 can be configured into 2 functional modes via the T2CON and T2MOD registers:

- Mode1: Auto-reload up/down counting
- Mode2: Baud rate generation for Debug UART

Timer2 can operate either as a timer or as an event counter.

8.1.7.1 Timer2 registers

Timer2 contains six Special Function Registers (SFRs) which can be accessed by the CPU.

Table 34. Timer2 SFR register List

Name	Size [bytes]	SFR address	Description	Access
T2CON	1	C8h	Timer2 control register	R/W
T2MOD	1	C9h	Timer2 mode register	R/W
RCAP2L	1	CAh	Timer2 reload lower byte	R/W
RCAP2H	1	CBh	Timer2 reload upper byte	R/W
T2L	1	CCh	Timer2 timer/counter lower byte	R/W
T2H	1	CDh	Timer2 timer/counter upper byte	R/W

Timer2 registers can be written to by either hardware or firmware. If both the hardware and firmware attempt to update the registers T2H, T2L, RCAP2H or RCAP2L during the same machine cycle, the firmware write takes precedence. A firmware write occurs in state S6 of the machine cycle.

All information provided in this document is subject to legal disclaimers.

© NXP B.V. 2017. All rights reserved.

Each increment or decrement of Timer2 occurs in state S1 except when in baud rate generation mode and configured as a counter. In this mode, Timer2 increments on each clock cycle. When configured as a timer, Timer2 is incremented every machine cycle. Since a machine cycle consists of 6 clock periods, the count rate is 1/6 of the CPU clock frequency.

8.1.7.2 T2CON register

The register is used to control Timer2 and report its status.

Table 35. Timer2 T2CON register (SFR address C8h) bit allocation

Bit	7	6	5	4	3	2	1	0
Symbol	TF2	-	RCLK0	TCLK0	-	TR2	C/T2	-
Reset	0	0	0	0	0	0	0	0
Access	R	R/W	R/W	R/W	R/W	R/W	R/W	R/W

Table 36. Description of T2CON bits

Bit	Symbol	Description
7	TF2	**Timer2 overflow** Set to logic level 1 by a Timer2 overflow. Set to logic level 0 by firmware. TF2 is not set when in baud rate generation mode.
6	-	Reserved.
5	RCLK0	**Timer2 Debug UART Receive Clock selector.** Set by firmware only. When set to logic level 1, Debug UART uses Timer2 overflow pulses. When set to logic level 0, Debug UART uses overflow pulses from another source (e.g. Timer1 in a standard configuration).
4	TCLK0	**Timer2 Debug UART Transmit Clock selector.** Set by firmware only. When set to logic level 1, Debug UART uses Timer2 overflow pulses. When set to logic level 0, Debug UART uses overflow pulses from another source (e.g. Timer1 in a standard configuration).
3	-	Reserved.
2	TR2	**Timer2 Run control.** Set by firmware only. When set to logic level 1, Timer2 is started. When set to logic level 0, Timer2 is stopped.
1	C/T2	**Timer2 Counter/Timer selector.** Set by firmware only. When set to logic level 1, Timer2 is set to counter operation. When set to logic level 0, Timer2 is set to timer operation.
0	-	Reserved. **This bit must be set to logic level 0 by firmware.**

All information provided in this document is subject to legal disclaimers.

© NXP B.V. 2017. All rights reserved.

8.1.7.3 T2MOD register

This Special Function Register is used to configure Timer2.

Table 37. Timer2 T2MOD register (SFR address C9h) bit allocation

Bit	7	6	5	4	3	2	1	0
Symbol	-	-	-	-	-	T2RD	-	DCEN
Reset	0	0	0	0	0	0	0	0
Access	R	R	R	R	R	R	R/W	R/W

Table 38. Description of TMOD bits

Bit	Symbol	Description
7 to 3	-	Reserved.
2	T2RD	**Timer2 ReaD flag.** Set by hardware and firmware. This bit is set to logic level 1 by hardware, if T2H is incremented between reading T2L and reading T2H. This bit is set to logic level 0, on the trailing edge of next T2L read. This bit is used to indicate that the16-bit Timer2 register is not read properly since the T2H part was incremented by hardware before it was read.
1	-	Reserved
0	DCEN	**Timer2 Down Count ENable.** Set by firmware only. When this bit is set, Timer2 can be configured (in auto_reload mode) as an up-counter. When this bit is reset, Timer2 can be configured (in auto-reload mode) as a down-counter.

All information provided in this document is subject to legal disclaimers.

© NXP B.V. 2017. All rights reserved.

8.1.7.4 T2L, T2H registers

These are the actual timer/counter bytes. T2L is the lower byte, T2H the upper byte.

On the fly reading can give a wrong value since T2H can be changed after T2L is read and before T2H is read. This situation is indicated by flag T2RD in T2MOD.

These two 8-bit registers are always combined to operate as one 16-bit timer/counter.

Table 39. Timer2 T2L register (SFR address CCh) bit allocation

Bit	7	6	5	4	3	2	1	0
Symbol	T2L.7	T2L.6	T2L.5	T2L.4	T2L.3	T2L.2	T2L.1	T2L.0
Reset	0	0	0	0	0	0	0	0
Access	R/W	R/W	R/W	R/W	R/W	R/W	R/W	R/W

Table 40. Description of T2L bits

Bit	Symbol	Description
7 to 0	T2L.7 to T2L.0	Timer2 timer/counter lower byte

Table 41. Timer2 T2H register (SFR address CDh) bit allocation

Bit	7	6	5	4	3	2	1	0
Symbol	T2H.7	T2H.6	T2H.5	T2H.4	T2H.3	T2H.2	T2H.1	T2H.0
Reset	0	0	0	0	0	0	0	0
Access	R/W	R/W	R/W	R/W	R/W	R/W	R/W	R/W

Table 42. Description of T2H bits

Bit	Symbol	Description
7 to 0	T2H.7 to T2H.0	Timer2 timer/counter upper byte

8.1.7.5 RCAP2L, RCAP2H registers

These are the reload bytes. In the reload mode the T2H/T2L counters are loaded with the values found in the RCAP2H/RCAP2L registers respectively.

Table 43. Timer2 RCAP2L register (SFR address CAh) bit allocation

Bit	7	6	5	4	3	2	1	0
Symbol	R2L.7	R2L.6	R2L.5	R2L.4	R2L.3	R2L.2	R2L.1	R2L.0
Reset	0	0	0	0	0	0	0	0
Access	R/W	R/W	R/W	R/W	R/W	R/W	R/W	R/W

Table 44. Description of RCAP2L bits

Bit	Symbol	Description
7 to 0	R2L.7 to R2L.0	Timer2 lower reload byte

Table 45. Timer2 RCAP2H register (SFR address CBh) bit allocation

Bit	7	6	5	4	3	2	1	0
Symbol	R2H.7	R2H.6	R2H.5	R2H.4	R2H.3	R2H.2	R2H.1	R2H.0
Reset	0	0	0	0	0	0	0	0
Access	R/W	R/W	R/W	R/W	R/W	R/W	R/W	R/W

Table 46. Description of RCAP2H bits

Bit	Symbol	Description
7 to 0	R2H.7 to R2H.0	Timer2 upper reload byte

All information provided in this document is subject to legal disclaimers.

© NXP B.V. 2017. All rights reserved.

8.1.8 Debug UART

The Debug UART is implemented to assist debug using UART_RX and UART_TX pins.

8.1.8.1 Feature list

The Debug UART has the following characteristics:

- Full duplex serial port
- Receive buffer to allow reception of a second byte while the first byte is being read out by the CPU
- Four modes of operation which support 8-bit and 9-bit data transfer at various baud rates
- Supports multi-processor communication
- Baud rate can be controlled through Timer1 or Timer2 baud rate generator

8.1.8.2 Debug UART functional description

The serial port has a receive buffer: a second byte can be stored while the previous one is read out of the buffer by the CPU. However, if the first byte has still not been read by the time reception of the second byte is complete, one of the bytes will be lost.

The receive and transmit data registers of the serial port are both accessed by firmware via the Special Function Register S0BUF. Writing to S0BUF loads the transmit register; reading from S0BUF accesses a physically separate receive register.

The serial port can operate in 4 modes. These modes are selected by programming bits SM0 and SM1 in S0CON:

- Mode 0:
  - Serial data are received and transmitted through UART_RX. UART_TX outputs the shift clock. 8 bits are transmitted/received (LSB first)

    Baud rate: fixed at 1/6 of the frequency of the CPU clock
- Mode 1:
  - 10 bits are transmitted through UART_TX or received through UART_RX: a start bit (0), 8 data bits (LSB first), and a stop bit (1)
  - Receive: The received stop bit is stored into bit RB8 of register S0CON
  - Baud rate: variable (depends on overflow of Timer1 or Timer2)
- Mode 2:
  - 11 bits are transmitted through UART_TX or received through UART_RX: start bit (0), 8 data bits (LSB first), a 9th data bit, and a stop bit (1)
  - Transmit: the 9th data bit is taken from bit TB8 of S0CON. For example, the parity bit could be loaded into TB8.
  - Receive: the 9th data bit is stored into RB8 of S0CON, while the stop bit is ignored
  - Baud rate: programmable to either 1/16 or 1/32 the frequency of the CPU clock

All information provided in this document is subject to legal disclaimers.

© NXP B.V. 2017. All rights reserved.

- Mode 3:
  - 11 bits are transmitted through UART_TX or received through UART_RX: a start bit (0), 8 data bits (LSB first), a 9th data bit, and a stop bit (1). In fact, mode 3 is the same as mode 2 in all aspects except the baud rate
  - Transmit: as mode 2, the 9th data bit is taken from TB8 of S0CON
  - Receive: as mode 2, the 9th data bit is stored into RB8 of S0CON
  - Baud rate: depends on overflows of Timer1 or Timer2

The Debug UART initiates transmission and/or reception as follows.

- Transmission is initiated, in modes 0, 1, 2, 3, by any instruction that uses S0BUF as destination
- Reception is initiated, in mode 0, if RI and REN in S0CON are set to logic 0 and 1 respectively
- Reception is initiated in modes 1, 2, 3 by the incoming start bit if REN in S0CON is set to a logic 1

The Debug UART contains 2 SFRs:

Table 47. Debug UART SFR register list

Name	Size [bytes]	SFR address	Description	Access
S0CON	1	0098h	Control and status register	R/W
S0BUF	1	0099h	Transmit and receive buffer	R/W

All information provided in this document is subject to legal disclaimers.

© NXP B.V. 2017. All rights reserved.

8.1.8.3 S0CON register

The Special Function Register S0CON is the control and status register of the Debug UART. This register contains the mode selection bits (SM2, SM1, SM0), the 9th data bit for transmit and receive (TB8 and RB8), and the serial port interrupt bits (TI and RI).

Table 48. Debug UART S0CON register (SFR: address 98h) bit allocation

Bit	7	6	5	4	3	2	1	0
Symbol	SM0	SM1	SM2	REN	TB8	RB8	TI	RI
Reset	0	0	0	0	0	0	0	0
Access	R/W	R/W	R/W	R/W	R/W	R/W	R/W	R/W

Table 49. Description of S0CON bits

Bit	Symbol	Description
7 to 6	SM (0:1)	**Mode selection bit 0 and 1.** Set by firmware only. The Debug UART has 4 modes (Table 50 “Debug UART modes” on page 33).
5	SM2	**Multi-processor communication enable.** Enables the multi-processor communication feature. Set by firmware only. In mode 2 and 3: if SM2 is set to logic level 1, then RI will not be activated and RB8 and S0BUF will not be loaded if the 9th data bit received is a logic 0 if SM2 is set to logic level 0, it has no influence on the activation of RI and RB8 In mode 1: if SM2 is set to logic level 1, then RI will not be activated and RB8 and S0BUF will not be loaded if no valid stop bit was received if SM2 is set to logic level 0, it has no influence on the activation of RI and RB8 In mode 0, SM2 has no influence
4	REN	**Serial reception enable.** Set by firmware only. When set to logic level 1, enables reception.
3	TB8	**Transmit data bit.** Set by firmware only. In modes 2 and 3, the value of TB8 is transmitted as the 9th data bit In modes 0 and 1, the TB8 bit is not used

All information provided in this document is subject to legal disclaimers.

© NXP B.V. 2017. All rights reserved.

Table 49. Description of S0CON bits *...continued*

Bit	Symbol	Description
2	RB8	**Receive data bit.** Set by hardware and by firmware.[1] When set to logic level 1: In modes 2 or 3, the hardware stores the 9th data bit that was received in RB8 In mode 1, the hardware stores the stop bit that was received in RB8 In mode 0, the hardware does not change RB8.
1	TI	**Transmit interrupt flag**. TI must be set to logic level 0 by firmware. In modes 2 or 3, when transmitting, the hardware sets to logic level 1 the transmit interrupt flag TI at the end of the 9th bit time In modes 0 or 1, when transmitting, the hardware sets to logic level 1 the transmit interrupt flag TI at the end of the 8th bit time.
0	RI	**Receive interrupt flag**. RI must be set to logic level 0 by firmware. In modes 2 or 3, when receiving, the hardware sets to logic level 1 the receive interrupt flag 1 clock period after sampling the 9th data bit (if SM2=1 setting RI can be blocked, see bit description of SM2 above) In mode 1, when receiving, the hardware sets to logic level 1 the receive interrupt flag 1 clock period after sampling the stop bit [2] In mode 0, when receiving, the hardware sets to logic level 1 RI at the end of the CPU state 1 of the 9th machine cycle after the machine cycle where the data reception started by a write to S0CON.

[1] If SM2 is set to logic 1, loading RB8 can be blocked, see bit description of SM2 above.

[2] If SM2 is set to logic 1, setting RI can be blocked, see bit description of SM2 above.

Remark: The S0CON register supports a locking mechanism to prevent firmware read-modify-write instructions to overwrite the contents while hardware is modifying the contents of the register.

Table 50. Debug UART modes

Mode	SM0	SM1	Description	Baud rate
0	0	0	Shift register	$f_{clk}/6$
1	0	1	8 bits Debug UART	Variable
2	1	0	9 bits Debug UART	$f_{clk}/64$ or $f_{clk}/32$
3	1	1	9 bits Debug UART	Variable

All information provided in this document is subject to legal disclaimers.

© NXP B.V. 2017. All rights reserved.

8.1.8.4 S0BUF register

This register is implemented twice. Writing to S0BUF writes to the transmit buffer. Reading from S0BUF reads from the receive buffer. Only hardware can read from the transmit buffer and write to the receive buffer.

Table 51. Debug UART S0BUF Register (SFR: address 99h) bit allocation

Bit	7	6	5	4	3	2	1	0
Symbol	S0BUF[7:0]							
Reset	0	0	0	0	0	0	0	0
Access	R/W	R/W	R/W	R/W	R/W	R/W	R/W	R/W

Table 52. Description of S0BUF bits

Bit	Symbol	Description
7 to 0	S0BUF[7:0]	Writing to S0BUF writes to the transmit buffer. Reading from S0BUF reads from the receive buffer.

8.1.8.5 Mode 0 baud rate

In mode 0, the baud rate is derived from the CPU states signals and thus:

Baud rate in mode 0 (1)

$$\frac{clk}{6}$$

The next table lists the baud rates in Debug UART mode 0.

Table 53. Baud rates in mode 0

Conditions	Min	Typ	Max	Unit
f_{CLK}	6.78	13.56	27.12	MHz
Baud rate	1.13	2.26	4.52	Mb/s

8.1.8.6 Mode 2 baud rate

In mode 2, the baud rate depends on the value of bit SMOD from the SFR register PCON.

Baud Rate using mode 2 (2)

$$\frac{2^{SMOD}}{32} \times f_{clk}$$

The next table lists the baud rates in Debug UART mode 2.

Table 54. Baud rates in mode 2

Conditions	Min	Typ	Max	Unit
f_{CLK}	6.78	13.56	27.12	MHz
Baud rate (SMOD=0)	212	424	847.5	kb/s
Baud rate (SMOD=1)	424	847.5	1695	kb/s

All information provided in this document is subject to legal disclaimers.

© NXP B.V. 2017. All rights reserved.

8.1.8.7 Mode 1 and 3 baud rates

In modes 1 and 3, the baud rates are determined by the rate of timer1 and timer2 overflow bits: ‘t1_ovf’ and ‘t2_ovf’. The register bit TCLK0 from the register T2CON selects if ‘t1_ovf’ or ‘t2_ovf’ should be used as a source when transmitting. The register bit RCLK0 from the register T2CON selects if ‘t1_ovf’ or ‘t2_ovf’ should be used as a source when receiving. The timers interrupt should be disabled when used to define the Debug UART baud rates.

The data rate is also dependant on the value of the bit SMOD from the SFR register PCON.

If over1rate is the equivalent ‘t1_ovf’ frequency and over2rate is the equivalent ‘t2_ovf’ frequency then:

Baud rate in mode 1 and 3 when related to timer1 overflow (3)

$$\frac{2^{SMOD}}{32} \cdot over1rate$$

See also Section 8.1.8.8 “Baud rates using Timer1 (Debug UART mode 1 and 3)”

Baud rate in mode 1 and 3 when related to timer2 overflow (4)

$$\frac{1}{16} \cdot over2rate$$

See also Section 8.1.8.9 “Baud rates using Timer2 (Debug UART mode 1 and 3)”

The next table shows the trigger select:

Table 55. Trigger select

RCLK0	TCLK0	SMOD	receive trigger rate	transmit trigger rate
0	-	0	over1rate/32	-
0	-	1	over1rate/16	-
1	-	-	over2rate/16	-
-	0	0	-	over1rate/32
-	0	1	-	over1rate/16
-	1	-	-	over2rate/16

8.1.8.8 Baud rates using Timer1 (Debug UART mode 1 and 3)

The Timer1 interrupt should be disabled in this application. The Timer1 itself can be configured for either ‘timer’ or ‘counter’ operation, and in any of its 3 running modes. In the most typical applications, it is configured for ‘timer’ operation, in the auto-reload mode (Timer1 mode 2: high nibble of T01MOD = 0010b). In that case the baud rate is given by the formula:

Baud rate (5)

$$\frac{2^{SMOD}}{32} \times \frac{f_{clk}}{6 \times (256 - T1H)}$$

All information provided in this document is subject to legal disclaimers.

© NXP B.V. 2017. All rights reserved.

When rewriting this formula, the value for the Timer1 reload value T1H is calculated from the desired baud rate as follows:

Timer1 reload value T1H (6)

$$256 - \frac{2^{SMOD} \times f_{clk}}{32 \times 6 \times Baudrate}$$

One can achieve very low baud rates with Timer1 by leaving the Timer1 interrupt enabled, and configuring the timer to run as a 16-bit timer (high nibble of T01MOD = 0001b), and using the Timer1 interrupt to do a 16-bit firmware reload. Note: the frequency f_{clk} is the internal microcontroller frequency. If there is no clock divider then $f_{clk} = f_{osc}$.

For details on programming Timer1 to function as baud rate generator for the Debug UART see Section 8.1.6 “Timer0/1 description” on page 20.

The next table lists the maximum baud rates for using mode 2 of Timer1.

Table 56. Maximum baud rates using mode 2 of Timer1

Reload value	f_{CLK} divided by	SMOD	Baud rate at f_{CLK}			Unit
			6.78	13.56	27.12	MHz
FF	96	1	70.6	141.2	282.5	kb/s

The next table shows commonly used baud rates using mode 2 of Timer1 and a CLK frequency of 27.12 MHz.

Table 57. Baud rates using mode 2 of Timer1 with f_{CLK} = 27.12 MHz

Reload value	f_{CLK} divided by	SMOD	Baud rate at f_{CLK}	Unit
FC	706	0	38.4	kb/s
F9	1412	0	19.2	kb/s
F1	2825	0	9.6	kb/s
E3	5650	0	4.8	kb/s
C5	11300	0	2.4	kb/s
8A	22600	0	1.2	kb/s

All information provided in this document is subject to legal disclaimers.

© NXP B.V. 2017. All rights reserved.

8.1.8.9 Baud rates using Timer2 (Debug UART mode 1 and 3)

Timer2 has a programming mode to function as baud rate generator for the Debug UART. In this mode the baud rate is given by formula:

Baud rate using Timer2 (7)

$$\frac{f_{clk}}{16 \times [65536 - (T2RCH,T2RCL)]}$$

When rewriting this formula, the value for the Timer2 reload values T2RCH/L is calculated from the desired baud rate as follows:

Reload value T2RCH/L (8)

$$65536 - \frac{f_{clk}}{16 \times Baudrate}$$

For details on programming Timer2 to function as baud rate generator for the Debug UART (see Section 8.1.7 “Timer2 description”).

Note: the frequency f_{clk} is the internal microcontroller frequency. If there is no clock divider then $f_{clk} = f_{osc}$.

The next table lists the maximum baud rates when using Timer2.

Table 58. Maximum baud rates using Timer2

Reload value T2RCH/L	f_{CLK} divided by	Baud rate			Unit
		6.78	13.56	27.12	MHz
FFFF	16	424	847.5	1695	kb/s

8.2 General purpose IOs configurations

This chapter describes the different configurations for the IO pads:

P70_IRQ
P35
P34, alternate function SIC_CLK
P33_INT1
P32_INT0
P31, alternate function UART_TX
P30, alternate function UART_RX

Note that in Hard Power Down mode, these ports are disconnected from their supply rail.

For a given port x, there are three configuration registers:

PxCFGA[n]
PxCFGB[n]
Px[n]

where x is 3 or 7 and n is the bit index.

All information provided in this document is subject to legal disclaimers.

© NXP B.V. 2017. All rights reserved.

At maximum 4 different controllable modes can be supported. These modes are defined with the following bits:

- PxCFGA[n]=0 and PxCFGB[n]=0: Open drain
- PxCFGA[n]=1 and PxCFGB[n]=0: Quasi Bidirectional (Reset mode)
- PxCFGA[n]=0 and PxCFGB[n]=1: input (High Impedance)
- PxCFGA[n]=1 and PxCFGB[n]=1: Push/pull output

Px[n] is used to write or read the port value.

Here is the list of the registers used for these GPIO configuration

Table 59. Timer0/1 Special Function registers List

Name	Size [bytes]	SFR address	Description	Access
P3CFGA	1	FCh	Port 3 configuration	R/W
P3CFGB	1	FDh	Port 3 configuration	R/W
P3	1	B0h	Port 3 value	R/W
P7CFGA	1	F4h	Port 7configuration	R/W
P7CFGB	1	F5h	Port 7 configuration	R/W
P7	1	F7h	Port 7 value	R/W

All information provided in this document is subject to legal disclaimers.

© NXP B.V. 2017. All rights reserved.

8.2.1 Pad configurations description

8.2.1.1 Open-drain

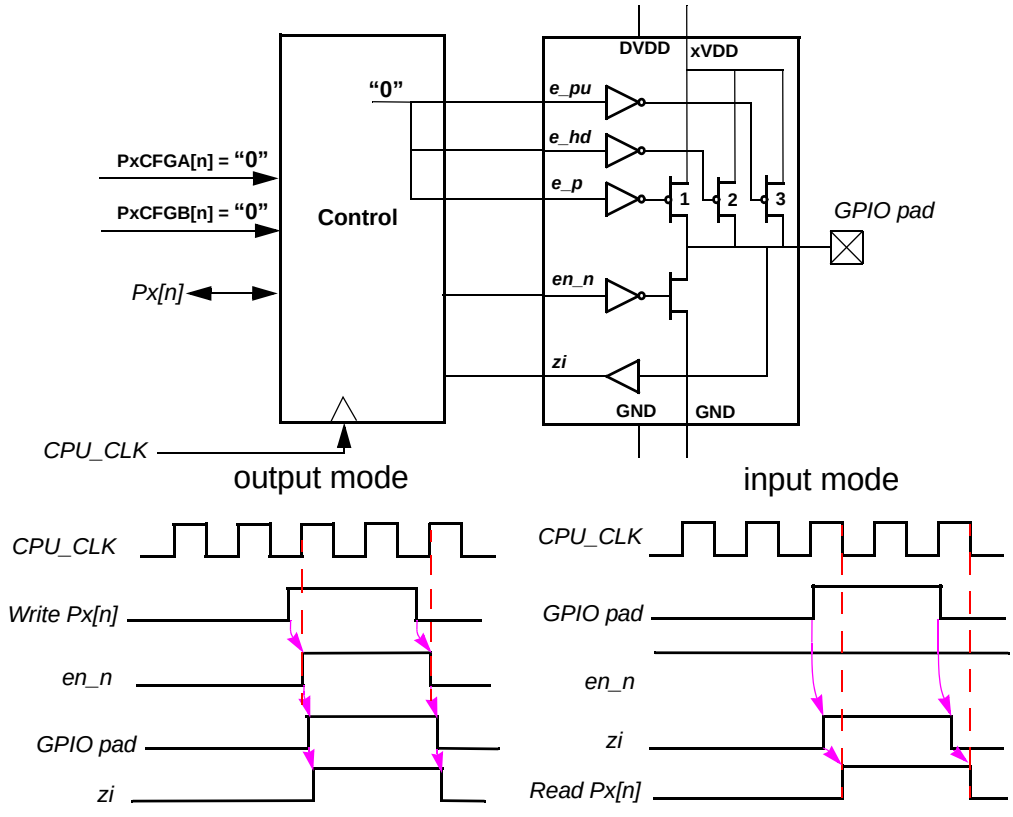

Fig 6. Open-drain

In open drain configuration, an external pull-up resistor is required to output or read a logic level 1. When writing polarity Px[n] to logic level 0, the GPIO pad is pulled down to logic level 0. When writing polarity Px[n] to logic level 1 the GPIO pad is in High Impedance.

All information provided in this document is subject to legal disclaimers.

© NXP B.V. 2017. All rights reserved.

8.2.1.2 Quasi Bidirectional

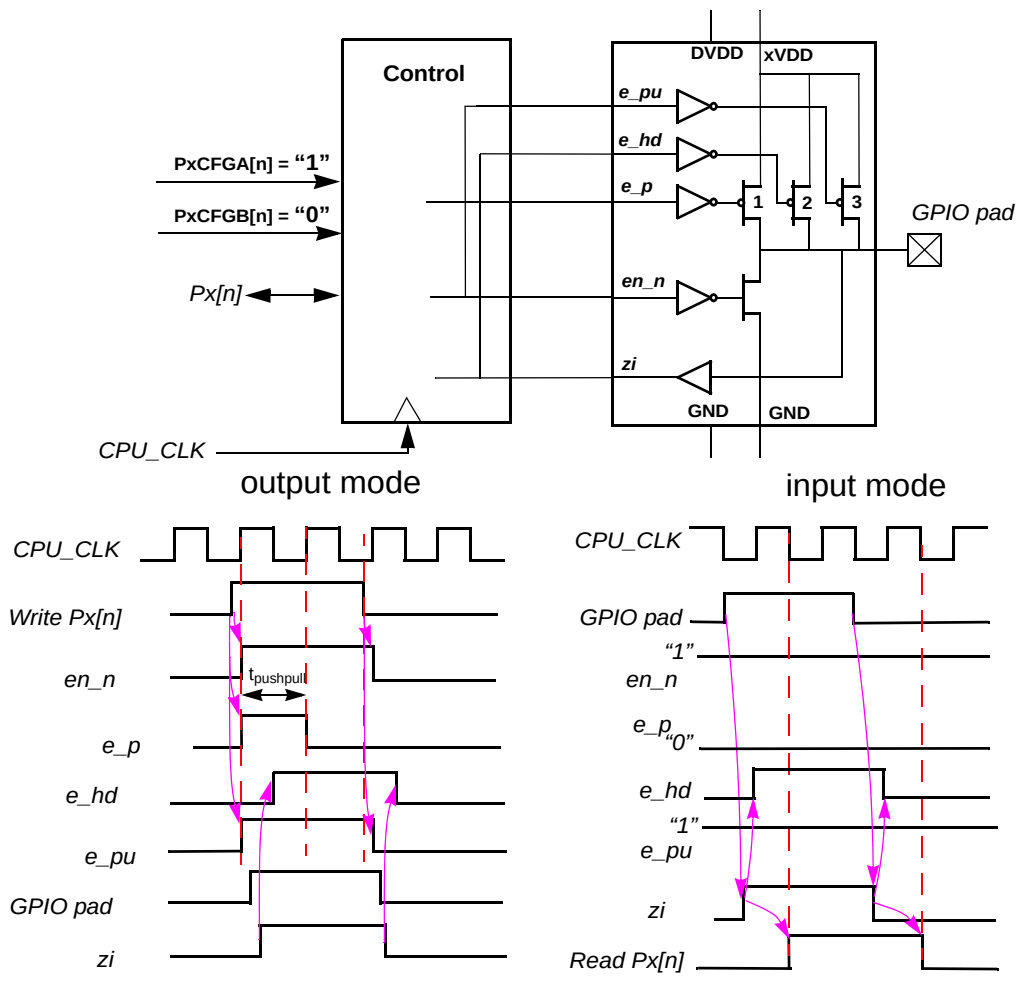

Fig 7. Quasi Bidirectional

In Quasi Bidirectional configuration, e_p is driven to logic level 1 for only one CPU_CLK period when writing Px[n]. During the $t_{pushpull}$ time the pad drive a strong logic level 1 at its output. While Px[n] is logic level 1, this state will be held by the weak hold transistor (e_hd), which implements a latch function. Because of the weaker nature of this hold transistor, the pad cell can now act as an input as well. A third very weak pull-up transistor (e_pu) ensures that an open input is read as logic level 1.

On a transition from logic level 0 to logic level 1 externally driven on GPIO pad, when the voltage on the pad is at the supply voltage divided by 2, the pull-up (e_hd) is activated.

The maximum current that can be sourced by the e_pu and e_hd transistors is 150 μA total at 3.6 V.

All information provided in this document is subject to legal disclaimers.

© NXP B.V. 2017. All rights reserved.

8.2.1.3 Input

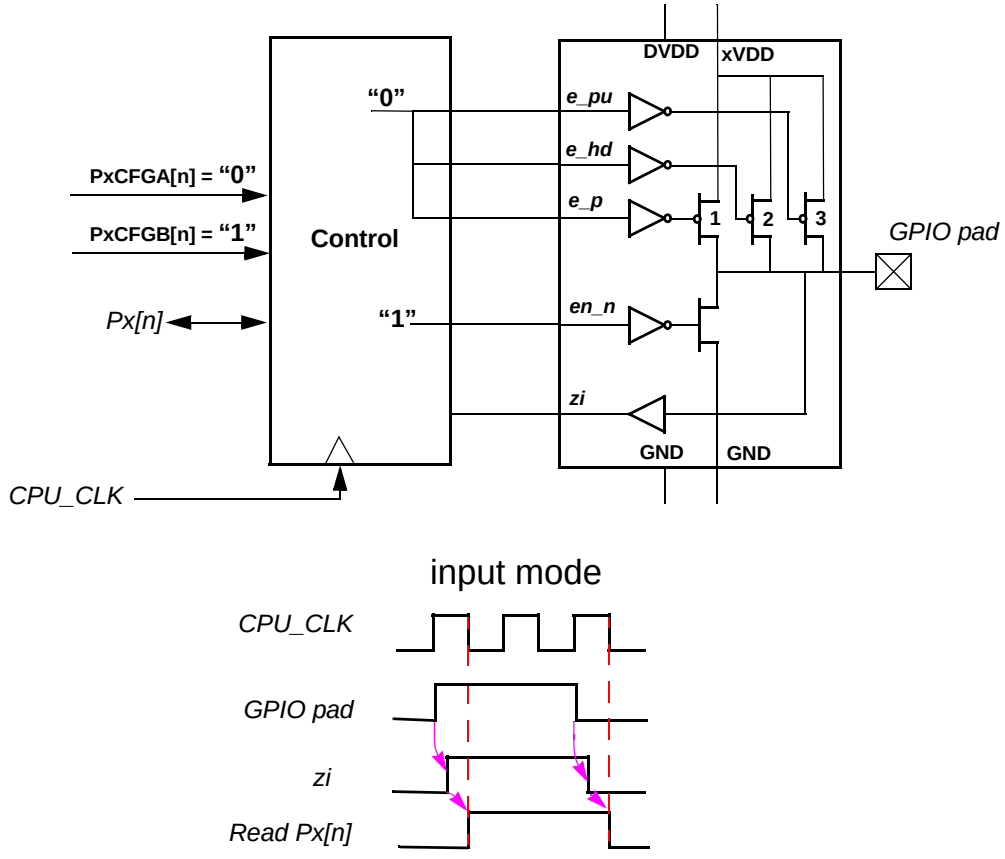

Fig 8. Input

In input configuration, no pull up or hold resistor are internally connected to the pad.

All information provided in this document is subject to legal disclaimers.

© NXP B.V. 2017. All rights reserved.

8.2.1.4 Push-pull output

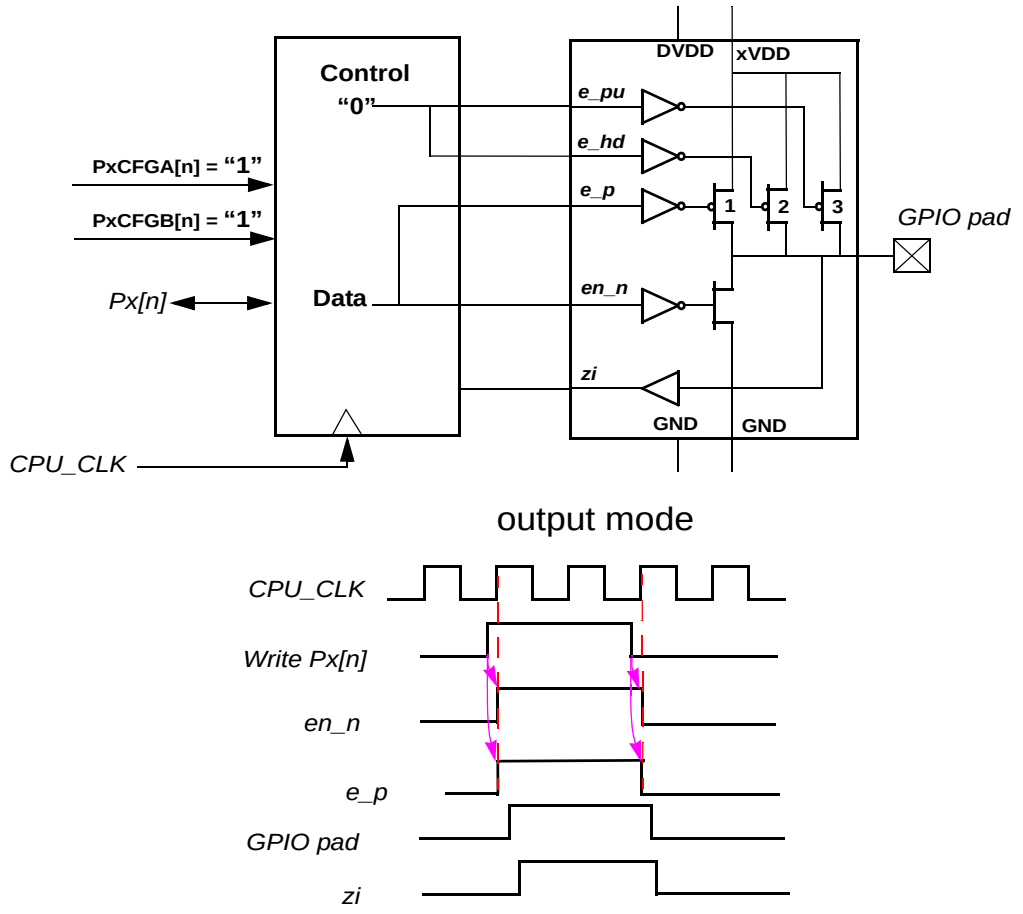

Fig 9. Push-pull output

In push-pull output, the output pin drives a strong logic level 0 or a logic level 1 continuously. It is possible to read back the pin output value.

All information provided in this document is subject to legal disclaimers.

© NXP B.V. 2017. All rights reserved.

8.2.2 GPIO registers description

8.2.2.1 P7CFGA register

Table 60. P7CFGA register (SFR: address F4h) bit allocation

Bit	7	6	5	4	3	2	1	0
Symbol	-	-	-	-	-	-	-	P7CFGA[0]
Reset	1	1	1	1	1	1	1	1
Access	R	R	R	R	R	R	R	R/W

Table 61. Description of P7CFGA bits

Bit	Symbol	Description
7 to 1	-	Reserved.
0	P7CFGA[0]	In conjuction with P7CFGB[0], it configures the functional mode of P70_IRQ pin.

8.2.2.2 P7CFGB register

Table 62. P7CFGB register (SFR: address F5h) bit allocation

Bit	7	6	5	4	3	2	1	0
Symbol	-	-	-	-	-	-	-	P7CFGB[0]
Reset	0	0	0	0	0	0	0	0
Access	R	R	R	R	R	R	R	R/W

Table 63. Description of P7CFGB bits

Bit	Symbol	Description
7 to 1	-	Reserved.
0	P7CFGB[0]	In conjuction with P7CFGA[0], it configures the functional mode of P70_IRQ pin.

8.2.2.3 P7 register

Table 64. P7 register (SFR: address F7h) bit allocation

Bit	7	6	5	4	3	2	1	0
Symbol	-	-	-	-	-	-	-	P7[0]
Reset	1	1	1	1	1	1	1	1
Access	R	R	R	R	R	R	R	R/W

Table 65. Description of P7 bits

Bit	Symbol	Description
7 to 1	-	Reserved.
0	P7[0]	**Writing to P7[0] writes** the corresponding value to the P70_IRQ pin according to the configuration mode defined by P7CFGA[0] and P7CFGB[0]. Reading from P7[0] reads the state of P70_IRQ pin.

All information provided in this document is subject to legal disclaimers.

© NXP B.V. 2017. All rights reserved.

8.2.2.4 P3CFGA register

Table 66. P3CFGA Register (SFR: address FCh) bit allocation

Bit	7	6	5	4	3	2	1	0
Symbol	-	-	P3CFGA[5]	P3CFGA[4]	P3CFGA[3]	P3CFGA[2]	P3CFGA[1]	P3CFGA[0]
Reset	1	1	1	1	1	1	1	1
Access	R	R	R/W	R/W	R/W	R/W	R/W	R/W

Table 67. Description of P3CFGA Register bits

Bit	Symbol	Description
7:6		Reserved.
5	P3CFGA[5]	In conjuction with P3CFGB[5], it configures the functional mode of P35
4	P3CFGA[4]	In conjuction with P3CFGB[4], it configures the functional mode of P34
3	P3CFGA[3]	In conjuction with P3CFGB[3], it configures the functional mode of P33_INT1
2	P3CFGA[2]	In conjuction with P3CFGB[2], it configures the functional mode of P32_INT0
1	P3CFGA[1]	In conjuction with P3CFGB[1], it configures the functional mode of P31
0	P3CFGA[0]	In conjuction with P3CFGB[0], it configures the functional mode of P30

8.2.2.5 P3CFGB register

Table 68. P3CFGB register (SFR: address FDh) bit allocation

Bit	7	6	5	4	3	2	1	0
Symbol	-	-	P3CFGB[5]	P3CFGB[4]	P3CFGB[3]	P3CFGB[2]	P3CFGB[1]	P3CFGB[0]
Reset	0	0	0	0	0	0	0	0
Access	R	R	R/W	R/W	R/W	R/W	R/W	R/W

Table 69. Description of P3CFGB bits

Bit	Symbol	Description
7 to 6		Reserved.
5	P3CFGB[5]	In conjuction with P3CFGA[5], it configures the functional mode of P35.
4	P3CFGB[4]	In conjuction with P3CFGA[4], it configures the functional mode of P34.
3	P3CFGB[3]	In conjuction with P3CFGA[3], it configures the functional mode of P33.
2	P3CFGB[2]	In conjuction with P3CFGA[2], it configures the functional mode of P32.
1	P3CFGB[1]	In conjuction with P3CFGA[1], it configures the functional mode of P31.
0	P3CFGB[0]	In conjuction with P3CFGA[0], it configures the functional mode of P30.

All information provided in this document is subject to legal disclaimers.

© NXP B.V. 2017. All rights reserved.

8.2.2.6 P3 register

Table 70. P3 register (SFR: address B0h) bit allocation

Bit	7	6	5	4	3	2	1	0
Symbol	-	-	P3[5]	P3[4]	P3[3]	P3[2]	P3[1]	P3[0]
Reset	1	1	1	1	1	1	1	1
Access	R	R	R/W	R/W	R/W	R/W	R/W	R/W

Table 71. Description of P3 bits

Bit	Symbol	Description
7 to 6	-	Reserved.
5	P3[5]	Writing to P3[5] writes the corresponding value to P35 pin according to the configuration mode defined by P3CFGA[5] and P3CFGB[5]. Reading from P3[5] reads the state of P35 pin.
4	P3[4]	When P34 alternate function SIC_CLK is not used, writing to P3[4] writes the corresponding value to P34 pin according to the configuration mode defined by P3CFGA[4] and P3CFGB[4]. Reading from P3[4] reads the state of P34 pin.
3	P3[3]	Writing to P3[3] writes the corresponding value to P33_INT1 pin according to the configuration mode defined by P3CFGA[3] and P3CFGB[3]. Reading from P3[3] reads the state of P33_INT1 pin.
2	P3[2]	Writing to P3[2] writes the corresponding value to P32_INT0 pin according to the configuration mode defined by P3CFGA[2] and P3CFGB[2]. Reading from P3[2] reads the state of P32_INT0 pin.
1	P3[1]	When the P31 pin alternate function UART_TX is not used, writing to P3[1] writes the corresponding value to P31 pin according to the configuration mode defined by P3CFGA[1] and P3CFGB[1]. Reading from P3[1] reads the state of P31 pin.
0	P3[0]	When the P30 pin alternate function UART_RX is not used, writing to P3[0] writes the corresponding value to P30 pin according to the configuration mode defined by P3CFGA[0] and P3CFGB[0]. Reading from P3[0] reads the state of P30 pin.

All information provided in this document is subject to legal disclaimers.

© NXP B.V. 2017. All rights reserved.

8.2.2.7 P5 register

Table 72. P5 register (SFR: address D7h) bit allocation

Bit	7	6	5	4	3	2	1	0
Symbol	-	-	-	-	-	P5[2]	P5[1]	P5[0]
Reset	1	1	1	1	1	1	1	1
Access	R	R	R	R	R	R	R/W	R/W

Table 73. Description of P5 bits

Bit	Symbol	Description
7 to 3	-	Reserved.
2	P5[2]	**Bit 2 of P5 register** is attached to USB signal “MP_ready” that indicates USB block is ready for a new transaction like write command, write data or read data. This bit is polled by embedded firmware that manage USB transactions.
1	P5[1]	**Writing to P5[1] writes** the corresponding value to SDA I^2C pin according to the open drain configuration mode. Reading from P5[1] reads the state of SDA I^2C pin.
0	P5[0]	**Writing to P5[0] writes** the corresponding value to SCL of the I^2C pin according to the open drain configuration mode. Reading from P5[0] reads the state of NSS I^2C pin.

Remark: P5 supports only open drain mode

8.3 Host interfaces

PN533 must be able to support different kind of interfaces to communicate with the HOST. All the interfaces that have to be supported are exclusive.

- USB interface
- High Speed UART (HSU): supporting specific high baud rates

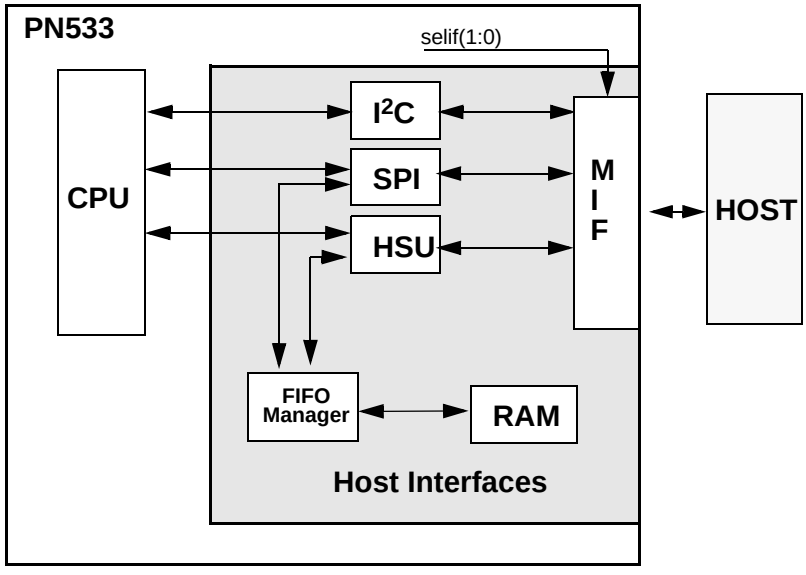

Fig 10. Host interface block diagram

All information provided in this document is subject to legal disclaimers.

© NXP B.V. 2017. All rights reserved.

8.3.1 MATX description

After every Power-On or Hard Reset (RSTPD_N at low level), the PN533 also resets its interfaces and checks the current HOST interface type.

The PN533 identifies the selected HOST interface by means of the logic levels on the control pins I0 and I1 after the Reset Phase. This is done by a combination of fixed pin connections

The Power for the MATX is delivered from PVDD.

The firmware must copy the value of the pads I0 and I1 to respectively selif[0] and selif[1].

Table 74. HOST interface selection

PN533 Pin number	Config_IO_I1 register	Host Interface selected			
		HSU	HSU	USB non bus powered	USB bus powered
18	selif[1]	0	1	0	1
17	selif[0]	0	0	1	1
25	DP	RX	RX	DP	DP
24	DM	TX	TX	DM	DM

8.3.1.1 MATX register

The Config I0_I1 register is used to select the host interface. It manages also the polarity of P33_INT1.

Table 75. Config I0_I1 register (address 6103h) bit allocation

Bit	7	6	5	4	3	2	1	0
Symbol	int1_pol	-	pad_I1	-	pad_I0	enselif	Selif[1:0]	
Reset	0	0	X	0	X	0	0	0
Access	R/W	R	R/W	R	R/W	R/W	R/W	R/W

Table 76. Description of Config I0_I1 bits

Bit	Symbol	Description
7	int1_pol	When set to logic 1, the value of the P33_INT1 pin is inverted.
6	-	Reserved.
5	pad_I1	When read this bit gives the state of the I1 pin.
4	-	Reserved.
3	pad_I0	When read this bit gives the state of the I0 pin.
2	enselif	When set to logic 1, this bit indicates that the self bits are valid and that the selected interface on the MIF can drive the pins. The firmware must copy the value of the pads I0 and I1 to respectively selif[0] and selif[1] When set to logic 0, the MIF cannot drive the IO lines.
1 to 0	Selif[1:0]	These bits are used by the firmware to select the host interface communication link, see Table 74 on page 47.

8.3.1.2 Pads NSS/P50_SCL/HSU_RX and MOSI/SDA / HSU_TX

The I^2C SDA and SCL IO ports are configured in open drain mode. A pull-up resistor is required for both pins to output or read a logical ‘1’.

In HSU mode, HSU_RX is in input mode and HSU_TX is in push-pull mode.

All information provided in this document is subject to legal disclaimers.

© NXP B.V. 2017. All rights reserved.

8.3.2 I²C interface

It is recommended to refer the I²C standard for more information.

The I²C interface implements a Master I²C bus interface with integrated shift register, shift timing generation. I²C Standard mode (100 kHz SCLK) and Fast mode (400 kHz SCLK) are supported.

General Call +W is supported, not hardware General Call (GC +R).

The mains characteristics of the I²C module are:

- Support Master I²C bus
- Standard and Fast mode supported

The I²C module is control through 5 registers:

Table 77. I²C register list

Name	Size [bytes]	Address	Description	Access
I²CCON	1	D8h (SFR)	Control register	R/W
I²CSTA	1	D9h (SFR)	Status register	R/W
I²CDAT	1	DAh (SFR)	Data register	R/W
I²CADR	1	DBh (SFR)	Slave Address register	R/W

8.3.2.1 I²C functional description

The I²C interface may operate in any of the following two modes:

- Master Transmitter
- Master Receiver

Two types of data transfers are possible on the I²C bus:

- Data transfer from a Master transmitter to a Slave receiver. The first byte transmitted by the Master is the Slave address. Next follows a number of data bytes. The Slave returns an acknowledge bit after each received byte.
- Data transfer from a Slave transmitter to a Master receiver. The first byte (the Slave address) is transmitted by the Master. The Slave then returns an acknowledge bit. Next follows the data bytes transmitted by the Slave to the Master. The Master returns an acknowledge bit after each received byte except the last byte. At the end of the last received byte, a “not acknowledge” is returned.

In a given application, the I²C interface may operate as a Master or as a Slave.

In the Slave mode, the I²C interface hardware looks for its own Slave address and the general call address. If one of these addresses is detected, an interrupt is requested. When the PN533 microcontroller wishes to become the bus Master, the hardware waits until the bus is free before the Master mode is entered so that a possible Slave action is not interrupted. If bus arbitration is lost in the Master mode, the I²C interface switches to the Slave mode immediately and can detect its own Slave address in the same serial transfer.

All information provided in this document is subject to legal disclaimers.

© NXP B.V. 2017. All rights reserved.

8.3.2.2 Master transmitter mode

As a Master, the I^{2}C logic will generate all of the serial clock pulses and the START and STOP conditions. A transfer is ended with a STOP condition or with a repeated START condition. Since a repeated START condition is also the beginning of the next serial transfer, the I^{2}C bus will not be released.

I^{2}C data are output through SDA while P50_SCL outputs the serial clock. The first byte transmitted contains the Slave address of the receiving device (7-bit SLA) and the data direction bit. In this case the data direction bit (R/W) will be a logic ‘0’ (W). I^{2}C data are transmitted 8 bits at a time. After each byte is transmitted, an acknowledge bit is received. START and STOP conditions are output to indicate the beginning and the end of a serial transfer.

In the Master transmitter mode, a number of data bytes can be transmitted to the Slave receiver. Before the Master transmitter mode can be entered, I^{2}CCON must be initialized with the ENS1 bit set to logic level 1 and the STA, STO and SI bits set to logic level 0. ENS1 must be set to logic level 1 to enable the I^{2}C interface. If the AA bit is set to logic level 0, the I^{2}C interface will not acknowledge its own Slave address or the general call address if they are present on the bus. This will prevent the I^{2}C interface from entering a Slave mode.

The Master transmitter mode may now be entered by setting the STA bit. The I^{2}C interface logic will then test the I^{2}C bus and generate a start condition as soon as the bus becomes free. When a START condition is transmitted, the serial interrupt flag (SI) is set to logic level 1, and the status code in the status register (I^{2}CSTA) will be 08h. This status code must be used to vector to an interrupt service routine that loads I^{2}CDAT with the Slave address and the data direction bit (SLA+W). The SI bit in I^{2}CCON must then be set to logic level 0 before the serial transfer can continue.

When the Slave address and the direction bit have been transmitted and an acknowledgment bit has been received, the serial interrupt flag (SI) is set to logic level 1 again, and a number of status codes in I^{2}CSTA are possible. The appropriate action to be taken for any of the status codes is detailed in Table 82 on page 55. After a repeated start condition (state 10h), the I^{2}C interface may switch to the Master receiver mode by loading I^{2}CDAT with SLA+R.

All information provided in this document is subject to legal disclaimers.

© NXP B.V. 2017. All rights reserved.

8.3.2.3 Master receiver mode

As a Master, the I^{2}C logic will generate all of the serial clock pulses and the START and STOP conditions. A transfer is ended with a STOP condition or with a repeated START condition. Since a repeated START condition is also the beginning of the next serial transfer, the I^{2}C bus will not be released.

The first byte transmitted contains the Slave address of the transmitting device (7-bit SLA) and the data direction bit. In this case the data direction bit (R/W) will be logic level 1 (R). I^{2}C data are received via SDA while P50_SCL outputs the serial clock. I^{2}C data are received 8 bits at a time. After each byte is received, an acknowledge bit is transmitted. START and STOP conditions are output to indicate the beginning and end of a serial transfer.

In the Master receiver mode, a number of data bytes are received from a Slave transmitter. The transfer is initialized as in the Master transmitter mode. When the START condition has been transmitted, the interrupt service routine must load I^{2}CDAT with the 7-bit Slave address and the data direction bit (SLA+R). The SI bit in I^{2}CCON must then be set to logic 0 before the serial transfer can continue.

When the Slave address and the data direction bit have been transmitted and an acknowledgment bit has been received, the serial interrupt flag (SI) is set to logic level 1 again, and a number of status codes are possible in I^{2}CSTA. The appropriate action to be taken for each of the status codes is detailed in Table 83 on page 56. After a repeated start condition (state 10h), the I^{2}C interface may switch to the Master transmitter mode by loading I^{2}CDAT with SLA+W.

8.3.2.4 I^{2}CCON register

The CPU can read from and write to this 8-bit SFR. Two bits are affected by the Serial IO (the I^{2}C interface) hardware: the SI bit is set to logic level 1 when a serial interrupt is requested, and the STO bit is set to logic level 0 when a STOP condition is present on the I^{2}C bus. The STO bit is also set to logic level 0 when ENS1 = ‘0’.

Table 78. I^{2}CCON register (SFR: address D8h) bit allocation

Bit	7	6	5	4	3	2	1	0
Symbol	CR[2]	ENS1	STA	STO	SI	AA	CR[1:0]	
Reset	0	0	0	0	0	0	0	0
Access	R/W	R/W	R/W	R/W	R/W	R/W	R/W	R/W

All information provided in this document is subject to legal disclaimers.

© NXP B.V. 2017. All rights reserved.

Table 79. Description of I²CCON bits

Bit	Symbol	Description
7	CR[2]	**Serial clock frequency selection in Master mode.** Together with CR[1:0], this bit determines the clock rate (serial clock frequency) when the I²C interface is in a Master mode. Special attention has to be made on the I²C bit frequency in case of dynamic switching of the CPU clock frequency.
6	ENS1	**Serial IO enable.** When ENS1 bit is to logic level 0, SDA and P50_SCL are in high impedance. The state of SDA and P50_SCL is ignored, the I²C interface is in the “not addressed” Slave state, and the STO bit in I²CCON is forced to logic level 0. No other bits are affected. When ENS1 is logic level 1, the I²C interface is enabled, assuming selif[1:0] bits are 10b (see Table 74 on page 47). ENS1 should not be used to temporarily release the I²C interface from the I²C bus since, when ENS1 is set to logic level 0, the I²C bus status is lost. The AA flag should be used instead.
5	STA	**START control.** When the STA bit is set to logic level 1 to enter Master mode, the I²C interface hardware checks the status of the I²C bus and generates a START condition if the bus is free. If the bus is not free, then the I²C interface waits for a STOP condition (which will free the bus) and generates a START condition after a delay of a half clock period of the internal serial clock generator. If STA is set to logic level 1, while the I²C interface is already in a Master mode and one or more bytes are transmitted or received, the I²C interface transmits a repeated START condition. STA may be set to logic level 1 at any time. This includes the case when the I²C interface is the addressed Slave. When the STA bit is set to logic level 0, no START condition or repeated START condition will be generated.
4	STO	**STOP control.** When the STO bit is set to logic level 1, while the I²C interface is in Master mode, a STOP condition is transmitted to the I²C bus. When the STOP condition is detected on the bus, the I²C interface hardware automatically sets STO to logic level 0. In Slave mode, STO may be set to logic 1 to recover from an error condition. In this case, no STOP condition is transmitted to the I²C bus. However, the I²C interface hardware behaves as if a STOP condition has been received and switches to the defined “not addressed” Slave Receiver mode. If the STA and STO bits are both set to logic level 1, the STOP condition is transmitted to the I²C bus if the I²C interface is in Master mode (in Slave mode, the I²C interface generates an internal STOP condition which is not transmitted). The I²C interface then transmits a START condition. When the STO bit is set to logic level 0, no STOP condition will be generated.

All information provided in this document is subject to legal disclaimers.

© NXP B.V. 2017. All rights reserved.

Table 79. Description of I²CCON bits *...continued*

Bit	Symbol	Description
3	SI	**Serial interrupt flag.** When SI is set to logic level 1, then if the serial interrupt from the I²C interface port is enabled, the CPU will receive an interrupt. SI is set by hardware when any one of 25 of the possible 26 states of the I²C interface are entered. The only state that does not cause SI to be set to logic level 1 is state F8h, which indicates that no relevant state information is available. While SI is set by hardware to logic level 1, P50_SCL is held in logic 0 when the SCL line is logic level 0, and P50_SCL is held in high impedance when the SCL line is logic level 1. SI must be set to logic level 0 by firmware. When the SI flag is set to logic level 0, no serial interrupt is requested, and there is no stretching of the SCL line via P50_SCL. The bit IE1_4 of register IE1 (see Table 13 on page 17) has also to be set to logic level 1 to enable the corresponding I²C interrupt to the CPU.
2	AA	**Assert Acknowledge flag.** If AA is set to logic level 1, an acknowledge (low level to SDA) will be returned during the acknowledge clock pulse on the P50_SCL line when: • The “own Slave address” has been received. • The general call address has been received while the general call bit (GC) in I²CADR is set. • A data byte has been received while the I²C interface is in Master Receiver mode. • A data byte has been received while the I²C interface is in the addressed Slave Receiver mode. When the I²C interface is in the addressed Slave Transmitter mode, state C8h will be entered after the last serial bit is transmitted. When SI is set to logic level 0, the I²C interface leaves state C8h, enters the Not-addressed Slave Receiver mode, and the SDA line remains at logic 1. In state C8h, AA can be set to logic level 1 again for future address recognition. When the I²C interface is in the Not-addressed Slave mode, its own Slave address and the general call address are ignored. Consequently, no acknowledge is returned, and a serial interrupt is not requested. Thus, the I²C interface can be temporarily released from the I²C bus while the bus status is monitored. While the I²C interface is released from the bus, START and STOP conditions are detected, and I²C data are shifted in. Address recognition can be resumed at any time by setting AA to logic level 1. If AA is set to logic level 1 when the I²C own Slave address or the general call address has been partly received, the address will be recognized at the end of the byte transmission.

All information provided in this document is subject to legal disclaimers.

© NXP B.V. 2017. All rights reserved.

Table 79. Description of I²CCON bits *...continued*

Bit	Symbol	Description				
1 to 0	CR[1:0]	**Serial clock frequency selection in Master mode.**				
		CR2	**CR1**	**CR0**	**CPU_CLK division factor**	**I2C bit frequency**
		0	0	0	10	CPU_CLK/10
		0	0	1	20	CPU_CLK/20
		0	1	0	30	CPU_CLK/30
		0	1	1	40	CPU_CLK/40
		1	0	0	80	CPU_CLK/80
		1	0	1	120	CPU_CLK/120
		1	1	0	160	CPU_CLK/160
		1	1	1	(256-T1 reload value)*12 24 ... 3072	CPU_CLK/3072 ... CPU_CLK/24

All information provided in this document is subject to legal disclaimers.

© NXP B.V. 2017. All rights reserved.

8.3.2.5 I²CSTA register

I²CSTA is an 8-bit read-only special function register. The three least significant bits are always at logic 0. The five most significant bits contain the status code. There are 26 possible status codes. When I²CSTA contains F8h, no relevant state information is available and no serial interrupt is requested. Reset initializes I²CSTA to F8h. All other I²CSTA values correspond to defined I²C interface states. When each of these states is entered, a serial interrupt is requested (SI = '1'), this can happen in any CPU cycle, and a valid status code will be present in I²CSTA. This status code will remain present in I²CSTA until SI is set to logic 0 by firmware.

Note that I²CSTA changes one CPU_CLK clock cycle after SI changes, so the new status can be visible in the same machine cycle SI changes or possibly (in one out of six CPU states) the machine cycle after that. This should not be a problem since you should not read I²CSTA before either polling SI or entry of the interrupt handler (which in itself takes several machine cycles).

Table 80. I²CSTA register (SFR: address D9h) bit allocation

Bit	7	6	5	4	3	2	1	0
Symbol	ST[7:0]							
Reset	1	1	1	1	1	0	0	0
Access	R	R	R	R	R	R	R	R

Table 81. Description of I²CSTA bits

Bit	Symbol	Description
7 to 0	ST[7:0]	**Encoded status bit for the different functional mode.** Several Status codes are returned in a certain mode (Master Transmitter, Master Receiver, Slave Transmitter, Slave Receiver) plus some miscellaneous status codes that can be returned at any time.

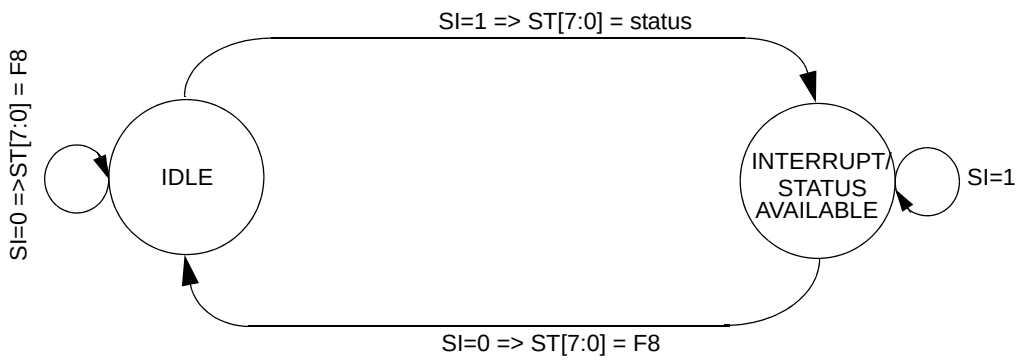

Fig 11. I²C state machine of status behavior

All information provided in this document is subject to legal disclaimers.

© NXP B.V. 2017. All rights reserved.

Table 82. I²C Master Transmitter Mode status code

Status Code ST[7:0]	Status of the I²C Bus and of the I²C interface Hardware	Application firmware Response					Next Action Taken By the I²C interface Hardware
		To/from I²CDAT	TO I²CCON				
			STA	STO	SI	AA	
08h	A START condition has been transmitted	Load SLA+W	X	0	0	X	SLA+W will be transmitted ACK will be received
10h	A repeated START condition has been transmitted	Load SLA+W	X	0	0	X	As above
		Load SLA+R	X	0	0	X	SLA+W will be transmitted; the I²C interface will be switched to MST/(TRX or REC) mode
18h	SLA+W has been transmitted; ACK has been received	Load data byte	0	0	0	X	Data byte will be transmitted; ACK bit will be received
		No I²CDAT action	1	0	0	X	Repeated START will be transmitted
		No I²CDAT action	0	1	0	X	STOP condition will be transmitted STO flag will be set to logic level 0
		No I²CDAT action	1	1	0	X	STOP condition followed by a START condition will be transmitted STO flag will be set to logic level 0
20h	SLA+W has been transmitted; NOT ACK has been received	Load data byte	0	0	0	X	Data byte will be transmitted ACK bit will be received
		No I²CDAT action	1	0	0	X	Repeated START will be transmitted
		No I²CDAT action	0	1	0	X	STOP condition will be transmitted STO flag will be set to logic level 0
		No I²CDAT action	1	1	0	X	STOP condition followed by a START condition will be transmitted STO flag will be set to logic level 0
28h	Write data byte in I²CDAT has been transmitted; ACK has been received	Load data byte	0	0	0	X	Data byte will be transmitted; ACK bit will be received
		No I²CDAT action	1	0	0	X	Repeated START will be transmitted
		No I²CDAT action	0	1	0	X	STOP condition will be transmitted STO flag will be set to logic level 0
		No I²CDAT action	1	1	0	X	STOP condition followed by a START condition will be transmitted STO flag will be set to logic level 0

All information provided in this document is subject to legal disclaimers.
© NXP B.V. 2017. All rights reserved.

Table 82. I²C Master Transmitter Mode status code *...continued*

Status Code ST[7:0]	Status of the I²C Bus and of the I²C interface Hardware	Application firmware Response					Next Action Taken By the I²C interface Hardware
		To/from I²CDAT	TO I²CCON				
			STA	STO	SI	AA	
30h	Write data byte in I²CDAT has been transmitted; NOT ACK has been received	Load data byte	0	0	0	X	Data byte will be transmitted; ACK bit will be received
		No I²CDAT action	1	0	0	X	Repeated START will be transmitted
		No I²CDAT action	0	1	0	X	STOP condition will be transmitted STO flag will be set to logic level 0
		No I²CDAT action	1	1	0	X	STOP condition followed by a START condition will be transmitted STO flag will be set to logic level 0
38h	Arbitration lost in SLA+R/W or Data bytes	No I²CDAT action	0	0	0	X	I²C bus will be released; a Slave mode will be entered
		No I²CDAT action	1	0	0	X	A START condition will be transmitted when the bus becomes free

Table 83. I²C Master Receiver Mode status codes

Status Code ST[7:0]	Status of the I²C Bus and the I²C interface Hardware	Application firmware Response					Next Action Taken By the I²C interface Hardware
		To /from I²CDAT	TO I²CCON				
			STA	STO	SI	AA	
08h	A START condition has been transmitted	Load SLA+W	X	0	0	X	SLA+W will be transmitted, ACK will be received
10h	A repeated START condition has been transmitted	Load SLA+W	X	0	0	X	As above
		Load SL+R	X	0	0	X	SLA+W will be transmitted; the I²C interface will be switched to MST/(TRX or REC) mode
38h	Arbitration lost in SLA+R/W or Data bytes	No I²CDAT action	0	0	0	X	I²C bus will be released; a Slave mode will be entered
		No I²CDAT action	1	0	0	X	A START condition will be transmitted when the bus becomes free
40h	SLA+R has been transmitted; ACK has been received	No I²CDAT action	0	0	0	0	Data byte will be received; NOT ACK bit will be returned
		No I²CDAT action	0	0	0	1	Data byte will be received; ACK bit will be returned
48h	SLA+R has been transmitted; NOT ACK has been received	No I²CDAT action	1	0	0	X	Repeated START condition will be transmitted
		No I²CDAT action	0	1	0	X	STOP condition will be transmitted; STO flag will be set to logic level 0
		No I²CDAT action	1	1	0	X	STOP condition followed by a START condition will be transmitted; STO flag will be set to logic level 0

All information provided in this document is subject to legal disclaimers.
© NXP B.V. 2017. All rights reserved.

Table 83. I²C Master Receiver Mode status codes *...continued*

Status Code ST[7:0]	Status of the I²C Bus and the I²C interface Hardware	Application firmware Response					Next Action Taken By the I²C interface Hardware
		To /from I²CDAT	TO I²CCON				
			STA	STO	SI	AA	
50h	Read data byte has been received; ACK has been returned	Read data byte or	0	0	0	0	Data byte will be received; NOT ACK bit will be returned
		Read data byte	0	0	0	1	Data byte will be received; ACK bit will be returned
58h	Read data byte has been received; NOT ACK has been returned	Read data byte	1	0	0	X	Repeated START condition will be transmitted
		Read data byte	0	1	0	X	STOP condition will be transmitted; STO flag will be set to logic level 0
		Read data byte	1	1	0	X	STOP condition followed by a START condition will be transmitted; STO flag will be set to logic level 0

Table 84. I²C Miscellaneous status codes

Status Code I²CSTA	Status of the I²C Bus and the I²C interface Hardware	Application firmware Response					Next Action Taken By the I²C interface Hardware
		To /from I²CDAT	TO I²CCON				
			STA	STO	SI	AA	
00h	Bus error	No I²CDAT action	X	1	0	X	Hardware will enter the “not addressed” Slave mode
F8h	No information available	No I²CDAT action	--	--	--	--	--

All information provided in this document is subject to legal disclaimers.
© NXP B.V. 2017. All rights reserved.

8.3.2.6 I²CDAT register

I²CDAT contains a byte of I²C data to be transmitted or a byte which has just been received. The CPU can read from and write to this 8-bit SFR while it is not in the process of shifting a byte. This occurs when the I²C interface is in a defined state and the serial interrupt flag SI is set to logic level 1. Data in I²CDAT remains stable as long as SI is set to logic level 1. The first bit to be transmitted is the MSB (bit 7), and, after a byte has been received, the first bit of received data is located at the MSB of I²CDAT. While data is being shifted out, data on the bus is simultaneously being shifted in; I²CDAT always contains the last data byte present on the bus. Thus, in the event of lost arbitration, the transition from Master Transmitter to Slave Receiver is made with the correct data in I²CDAT.

Table 85. I²CDAT register (SFR: address DAh) bit allocation

Bit	7	6	5	4	3	2	1	0
Symbol	I²CDAT[7:0]							
Reset	0	0	0	0	0	0	0	0
Access	R/W	R/W	R/W	R/W	R/W	R/W	R/W	R/W

Table 86. Description of I²CDAT bits

Bit	Symbol	Description
7 to 0	I²CDAT[7:0]	**I2C data.** Eight bits to be transmitted or just received. A logic level 1 in I²CDAT corresponds to a logic level 1 on the I²C bus, and a logic level 0 corresponds to a logic level 0 on the bus. I²C data shift through I²CDAT from right to left.

I²CDAT[7:0] and the ACK flag form a 9-bit shift register which shifts in or shifts out an 8-bit byte, followed by an acknowledge bit. The ACK flag is controlled by the I²C interface hardware and cannot be accessed by the CPU. I²C data are shifted through the ACK flag into I²CDAT on the rising edges of clock pulses on P50_SCL. When a byte has been shifted into I²CDAT, the I²C data are available in I²CDAT, and the acknowledge bit is returned by the control logic during the ninth clock pulse. I²C data are shifted out from I²CDAT via a buffer on the falling edges of clock pulses on P50_SCL.

When the CPU writes to I²CDAT, the buffer is loaded with the contents of I²CDAT[7] which is the first bit to be transmitted to the SDA line. After nine serial clock pulses, the eight bits in I²CDAT will have been transmitted to the SDA line, and the acknowledge bit will be present in ACK. Note that the eight transmitted bits are shifted back into I²CDAT.

All information provided in this document is subject to legal disclaimers.

© NXP B.V. 2017. All rights reserved.

8.3.2.7 I²CADR register

The CPU can read from and write to this 8-bit SFR. I²CADR is not affected by the I²C interface hardware. The content of this register is irrelevant when the I²C interface is in a Master mode. In the Slave modes, the seven most significant bits must be loaded with the microcontroller's own Slave address, and, if the least significant bit is set to logic level 1, the general call address (00h) is recognized; otherwise it is ignored.

Table 87. I²CADR register (SFR: address DBh) bit allocation

Bit	7	6	5	4	3	2	1	0
Symbol	SA[6:0]							GC
Reset	0	0	0	0	0	0	0	0
Access	R/W	R/W	R/W	R/W	R/W	R/W	R/W	R/W

Table 88. Description of I²CADR bits

Bit	Symbol	Description
7 to 1	SA[6:0]	**Slave address.** These bits correspond to the 7-bit Slave address which will be recognized on the incoming data stream from the I²C bus. When the Slave address is detected and the interface is enabled, a serial interrupt SI will be generated to the CPU.
0	GC	**General call.** When set to logic level 1, will cause the I²C logic to watch for the general call address to be transmitted on the I²C bus. If a general call address is detected and this bit is set to logic level 1, SI will be set to logic level 1.

8.3.2.8 I²C_wu_control register

The wake up block has to be enabled before the whole chip enters in Soft-Power-down mode. The choice of the wake-up conditions is made within the register I²C_wu_control. Read and Write conditions can be set together.

Table 89. I²C_wu_control register (address 610Ah) bit allocation

Bit	7	6	5	4	3	2	1	0
Symbol	-	-	-	-	-	i²c_wu_en_wr	i²c_wu_en_rd	i²c_wu_en
Reset	0	0	0	0	0	0	0	0
Access	R	R	R	R	R	R/W	R/W	R/W

Table 90. Description of I²C_wu_control bits

Bit	Symbol	Description
7 to 3	-	Reserved.
2	i²c_wu_en_wr	When set to logic level 1, the wake-up is valid for write commands
1	i²c_wu_en_rd	When set to logic level 1, the wake-up is valid for read commands
0	i²c_wu_en	When set to logic level 1, enable the I²C wake-up conditions

All information provided in this document is subject to legal disclaimers.

© NXP B.V. 2017. All rights reserved.

8.3.3 FIFO manager

This block is designed to manage a RAM as a FIFO in order to optimize the data exchange between the CPU and the HOST.

8.3.3.1 FIFO manager functional description

The RAM used for the FIFO is shared between the SPI and HSU interfaces. Indeed, these interfaces cannot be used simultaneously. The selection of the interface used is done by firmware. The FIFO manager block is the common part between the USBB and the HSU interfaces. It consists of a Data register, a Status register and also some registers to define the characteristics of the FIFO. These registers are addressed by the CPU as SFRs.

The RAM used as a FIFO is divided into two part: a receive part and a transmit part.

This block also manages the possible conflicts existing around the FIFO between the CPU and the interfaces. Indeed, a request coming from the interface (TR_req or RCV_req) can be simultaneous with a request to access to the data register coming from the CPU.

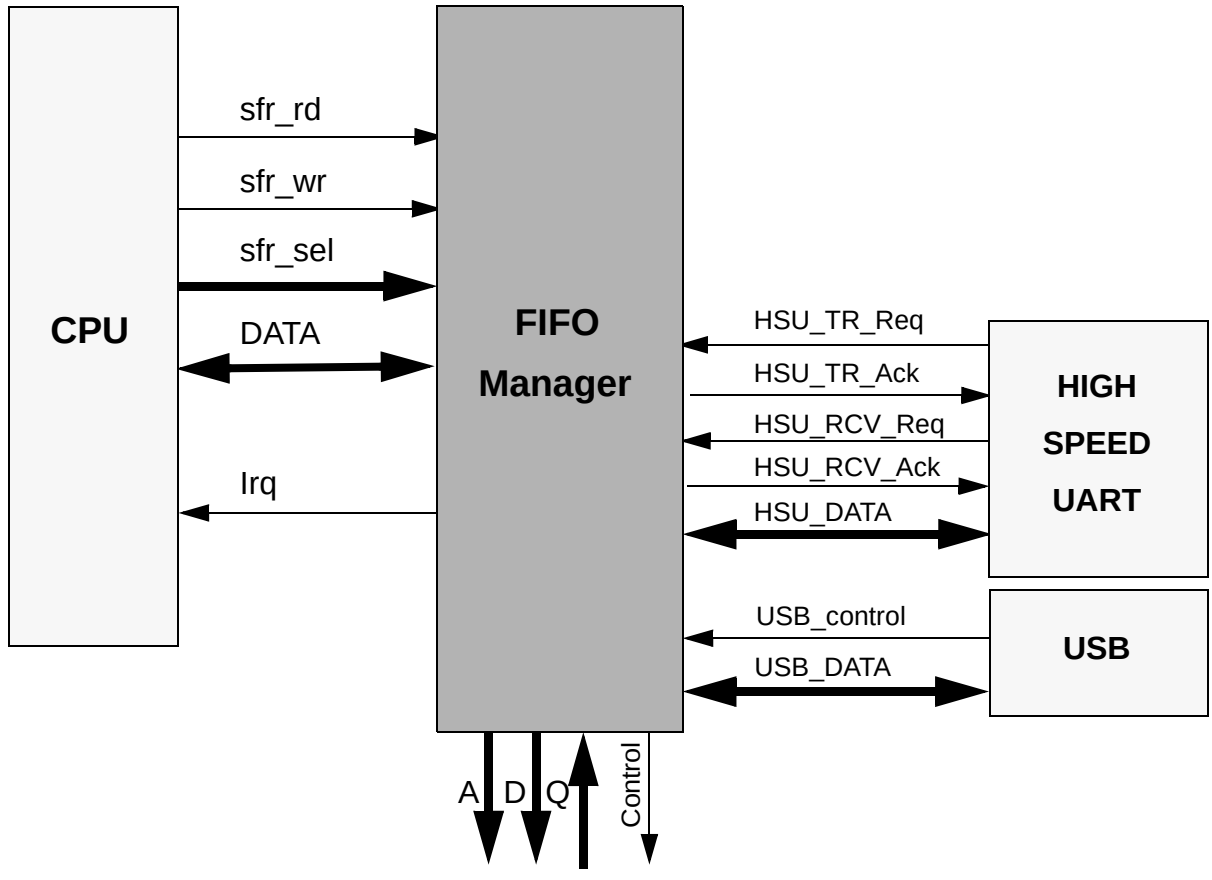

Fig 12. FIFO manager block diagram

9 SFR registers are needed to manage the FIFO manager.

All information provided in this document is subject to legal disclaimers.

© NXP B.V. 2017. All rights reserved.

Table 91. Fifo manager SFR register list

Name	Size [bytes]	SFR Address	Description	Access
RWL	1	9Ah	FIFO Receive Waterlevel: Controls the threshold of the FIFO in reception	R/W
TWL	1	9Bh	FIFO Transmit Waterlevel: Controls the threshold of the FIFO in transmission	R/W
FIFOFS	1	9Ch	FIFO Transmit FreeSpace: Status of the number of characters which can still be loaded in the FIFO	R/W
FIFOFF	1	9Dh	FIFO Receive Fullness: Status of the number of received characters in the FIFO	R/W
SFF	1	9Eh	Global Status/Error messages	R
FIT	1	9Fh	Interrupt Source	R/W
FITEN	1	A1h	Interrupt Enable and Reset FIFO	R
FDATA	1	A2h	Data reception/transmission buffer	R/W
FSIZE	1	A3h	Control the size of the FIFO in Reception	R/W

8.3.3.2 RWL register

This register defines the warning level of the Receive FIFO for the CPU. It implies a FIFO buffer overflow.

Table 92. RWL register (SFR: address 9Ah) bit allocation

Bit	7	6	5	4	3	2	1	0
Symbol	RWaterlevel[7:0]							
Reset	0	0	0	0	0	0	0	0
Access	R/W	R/W	R/W	R/W	R/W	R/W	R/W	R/W

Table 93. Description of RWL bits

Bit	Symbol	Description
7 to 0	RWaterlevel[7:0]	Overflow threshold of the Receive FIFO to set a warning

8.3.3.3 TWL register

This register defines the warning level of the Transmit FIFO for the CPU. It implies a FIFO buffer underflow.

Table 94. TWL register (SFR: address 9Bh) bit allocation

Bit	7	6	5	4	3	2	1	0
Symbol	TWaterlevel[7:0]							
Reset	0	0	0	0	0	0	0	0
Access	R/W	R/W	R/W	R/W	R/W	R/W	R/W	R/W

Table 95. Description of TWL bits

Bit	Symbol	Description
7 to 0	TWaterlevel[7:0]	Underflow threshold of the Transmit FIFO to set a warning

All information provided in this document is subject to legal disclaimers.

© NXP B.V. 2017. All rights reserved.

8.3.3.4 FIFOFS register

This register indicates the number of bytes that the CPU can still load into the FIFO until the Transmit FIFO is full.

Table 96. FIFOFS register (SFR: address 9Ch) bit allocation

Bit	7	6	5	4	3	2	1	0
Symbol	TransmitFreespace[7:0]							
Reset	0	0	0	0	0	0	0	0
Access	R/W	R/W	R/W	R/W	R/W	R/W	R/W	R/W

Table 97. Description of FIFOFS register bits

Bit	Symbol	Description
7 to 0	TransmitFreespace[7:0]	Freespace into the FIFO

8.3.3.5 FIFOFF register

This register indicates the number of bytes already received and loaded into the Receive FIFO.

Table 98. FIFOFF register (SFR: address 9Dh) bit allocation

Bit	7	6	5	4	3	2	1	0
Symbol	ReceiveFullness[7:0]							
Reset	0	0	0	0	0	0	0	0
Access	R/W	R/W	R/W	R/W	R/W	R/W	R/W	R/W

Table 99. Description of FIFOFF bits

Bit	Symbol	Description
7 to 0	ReceiveFullness[7:0]	Number of bytes received in the FIFO

All information provided in this document is subject to legal disclaimers.

© NXP B.V. 2017. All rights reserved.

8.3.3.6 SFF register

The register bits are used to allow the CPU to monitor the status of the FIFO. The primary purpose is to detect completion of data transfers.

Table 100. SFF register (SFR: address 9Eh) bit allocation

Bit	7	6	5	4	3	2	1	0
Symbol	FIFO_EN	-	TWLL	TFF	TFE	RWLH	RFF	RFE
Reset	0	0	1	0	1	0	0	1
Access	R/W	R	R	R	R	R	R	R

Table 101. Description of SFF bits

Bit	Symbol	Description
7	FIFO_EN	**Fifo Enable:** Set to logic 1 this bit enables the FIFO manager clock (CPU_CLK). Set to logic 0 the clock remains low.
6	-	Reserved.
5	TWLL	**Transmit WaterlLevelLow:** This bit is set to logic 1 when the number of bytes stored into the Transmit FIFO is equal or smaller than the threshold TWaterlevel.
4	TFF	**Transmit FIFO Full:** This is set to logic 1 if the transmit part of the FIFO is full. It is set to logic level 0 when a transfer is completed.
3	TFE	**Transmit FIFO Empty:** This bit indicates when the transmit part of the FIFO is empty. It is set to logic 0 when the CPU writes a character in the data register.
2	RWLH	**Receive WaterLevel High**: This bit is set to logic 1 when the number of bytes stored into the Receive FIFO is greater or equal to the threshold RWaterlevel.
1	RFF	**Receive FIFO Full:** This bit is set to logic 1 if the receive part of the FIFO is full. It is set to logic level 0 by reading the FDATA register.
0	RFE	**Receive FIFO Empty:** This bit indicates when the receive part of the FIFO is empty. Set to logic 1, when the Receive FIFO is empty. Set to logic level 0, when the Receive FIFO contains at least 1 byte.

All information provided in this document is subject to legal disclaimers.

© NXP B.V. 2017. All rights reserved.

8.3.3.7 FIT register

The FIT register contains 6 read-write bits which are logically OR-ed to generate an interrupt going to the CPU.

Table 102. FIT register (SFR: address 9Fh) bit allocation

Bit	7	6	5	4	3	2	1	0
Symbol	Reset	-	WCOL_ IRQ	TWLL_ IRQ	TFF_ IRQ	RWLH_ IRQ	ROVR_ IRQ	RFF_ IRQ
Reset	0	0	0	0	0	0	0	0
Access	W	R	R/W	R/W	R/W	R/W	R/W	R/W

Table 103. Description of FIT bits

Bit	Symbol	Description
7	Reset	**Reset:** Set to logic 1, Reset defines that the bits set to logic level 1 in the write command are set to logic level 0 in the register.
6	-	Reserved
5	WCOL_IRQ	**Write COLlision IRQ:** This bit is set to logic 1 when the transmitted part of the FIFO is already full (TFF is set to logic 1) and a new character is written by the CPU in the data register.
4	TWLL_IRQ	**Transmit WaterlLevelLow IRQ:** This bit is set to logic 1 when the number of bytes stored into the Transmit FIFO is equal or smaller than the threshold TWaterlevel.
3	TFF_IRQ	**Transmit FIFO Full IRQ:** This is set to logic 1 if the transmitted part of the FIFO is full.
2	RWLH_IRQ	**Receive WaterLevel High IRQ:** This bit is set to logic 1 when the number of bytes stored into the Receive FIFO is greater or equal to the threshold RWaterlevel.
1	ROVR_IRQ	**Read OVeRrun IRQ:** This bit indicates that a read overrun has occured.It occurs when the receiver part of the FIFO is full and a new data transfer is completed. Then the new received data is lost and ROVR_IRQ is set.
0	RFF_IRQ	**Receive FIFO Full IRQ:** This bit is set to logic 1 if the received part of the FIFO is full.

All information provided in this document is subject to legal disclaimers.

© NXP B.V. 2017. All rights reserved.

8.3.3.8 FITEN register

The FITEN register enables or disables the interrupt requests to the CPU. It is also used to reset the content of the Receive and Transmit FIFO.

Table 104. FITEN register (SFR: address A1h) bit allocation

Bit	7	6	5	4	3	2	1	0
Symbol	TFLUSH	RFLUSH	EN_ WCOL_ IRQ	EN_ TWLL_ IRQ	EN_ TFF_ IRQ	EN_ RWLH_ IRQ	EN_ ROVR_ IRQ	EN_ RFF_ IRQ
Reset	0	0	0	0	0	0	0	0
Access	R/W	R/W	R/W	R/W	R/W	R/W	R/W	R/W

Table 105. Description of FITEN bits

Bit	Symbol	Description
7	TFLUSH	When set to logic level 1, the pointer of the Transmit FIFO is reset. This bit and RFLUSH must not be set at the same time.
6	RFLUSH	When set to logic level 1, the pointer of the Receive FIFO is reset. This bit and TFLUSH must not be set at the same time but one after the other.
5	EN_WCOL_IRQ	**ENable Write COLlision IRQ:** When set to logic 1, the WCOL_IRQ is enabled. The bit IE1_5 of register IE1 (see Table 13 on page 17) has also to be set to logic level 1 to enable the corresponding CPU interrupt.
4	EN_TWLL_IRQ	**ENable Transmit WaterlLevelLow IRQ:** When set to logic 1, the TWLL_IRQ is enabled. The bit IE1_5 of register IE1 (see Table 13 on page 17) has also to be set to logic level 1 to enable the corresponding CPU interrupt.
3	EN_TFF_IRQ	**ENable Transmit FIFO Full IRQ:** When set to logic level 1, the TFF_IRQ is enabled. The bit IE1_5 of register IE1 (see Table 13 on page 17) has also to be set to logic level 1 to enable the corresponding CPU interrupt.
2	EN_RWLH_IRQ	**ENable Receive WaterLevel High IRQ:** When set to logic 1, the RWLH_IRQ is enabled. The bit IE1_5 of register IE1 (see Table 13 on page 17) has also to be set to logic level 1 to enable the corresponding CPU interrupt.
1	EN_ROVR_IRQ	**ENable Read OVeRrun IRQ:** When set to logic 1, the ROVR_IRQ is enabled. The bit IE1_5 of register IE1 (see Table 13 on page 17) has also to be set to logic level 1 to enable the corresponding CPU interrupt.
0	EN_RFF_IRQ	**ENable Receive FIFO Full IRQ:** When set to logic 1, the RFF_IRQ is enabled. The bit IE1_5 of register IE1 (see Table 13 on page 17) has also to be set to logic level 1 to enable the corresponding CPU interrupt.

All information provided in this document is subject to legal disclaimers.

© NXP B.V. 2017. All rights reserved.

8.3.3.9 FDATA register

The FDATA register is used to provide the transmitted and received data bytes. Each data written in the data register is pushed into the Transmit FIFO. Each data read from the data register is popped from the Receive FIFO.

Table 106. FDATA register (SFR: address A2h) bit allocation

Bit	7	6	5	4	3	2	1	0
Symbol	FDATA[7:0]							
Reset	0	0	0	0	0	0	0	0
Access	R/W	R/W	R/W	R/W	R/W	R/W	R/W	R/W

Table 107. Description of FDATA bits

Bit	Symbol	Description
7 to 0	FDATA[7:0]	Writing to FDATA writes to the transmit buffer. Reading from FDATA reads from the receive buffer.

8.3.3.10 FSIZE register

This register defines the size of the Receive FIFO. The maximum size is 182 bytes. The free space not used by the Receive FIFO in the RAM will be allocated to Transmit FIFO.

Table 108. FSIZE register (SFR: address A3h) bit allocation

Bit	7	6	5	4	3	2	1	0
Symbol	ReceiveSize[7:0]							
Reset	0	0	0	0	0	0	0	0
Access	R/W	R/W	R/W	R/W	R/W	R/W	R/W	R/W

Table 109. Description of FSIZE bits

Bit	Symbol	Description
7 to 0	ReceiveSize[7:0]	Size of the Receive FIFO

All information provided in this document is subject to legal disclaimers.

© NXP B.V. 2017. All rights reserved.

8.3.4 High Speed UART (HSU)

The High Speed UART (HSU) provides a high speed link to the host (up to 1.288 Mbit/s).

The HSU is a full duplex serial port. The serial port has a Receive-buffer: in conjunction with the FIFO manager, the reception of several bytes can be performed without strong CPU real time constraints. However, if the Receive FIFO still has not been read by the CPU, and the number of receive bytes is greater than the Receive FIFO size then the new incoming bytes will be lost.

The HSU receive and transmit data registers are both accessed by firmware in the FIFO manager FDATA register. Writing to FDATA loads the transmit register, reading from FDATA accesses the separate receive register.

The characteristics of the UART are the following:

- Full duplex serial port
- Receive buffer to allow reception of byte while the previous bytes are stored into the FIFO manager
- 8-bit data transfers
- Programmable baud rate generator using prescaler for transmission and reception
- Based on 27.12 MHz clock frequency
- Dedicated protocol preamble filter
- Wake-up generator

All information provided in this document is subject to legal disclaimers.

© NXP B.V. 2017. All rights reserved.

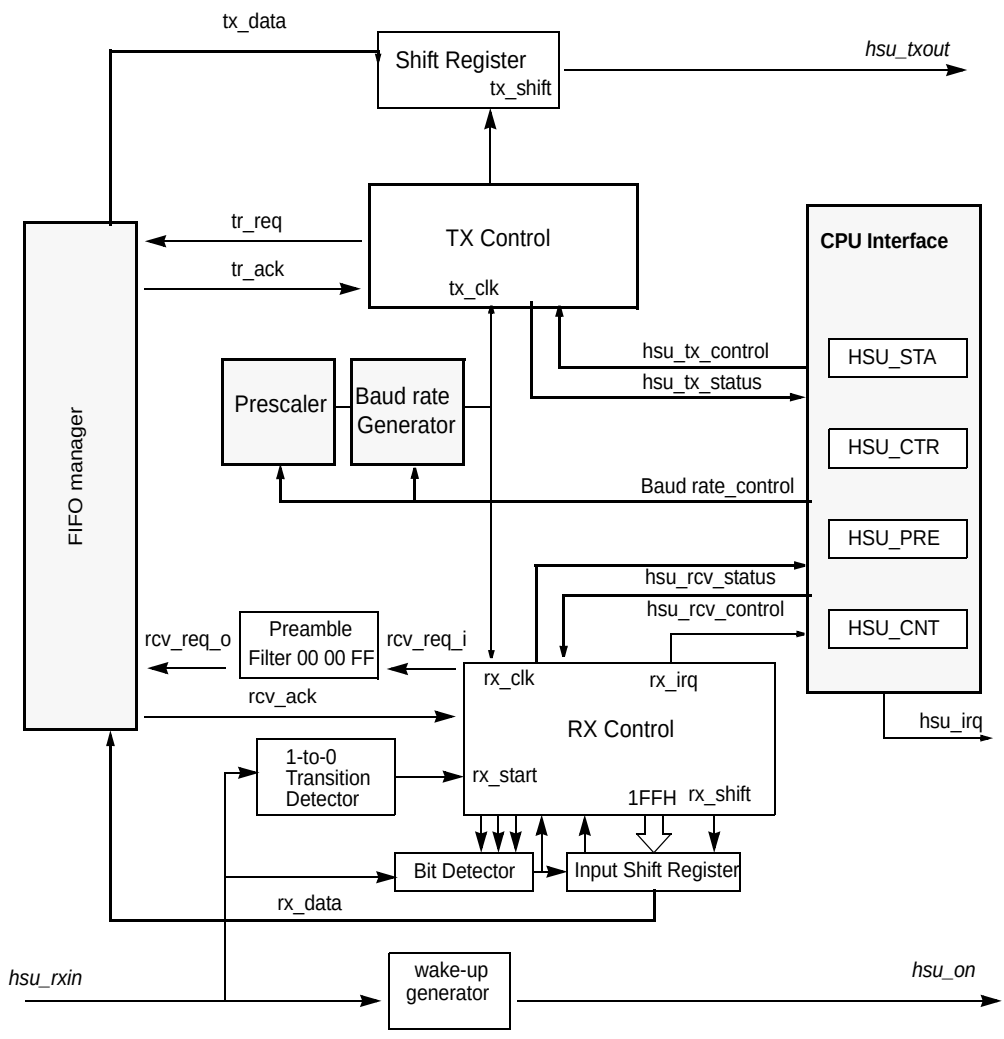

Fig 13. HSU block diagram

The HSU contains 4 SFRs:

Table 110. HSU SFR register list

Name	Size [bytes]	SFR Address	Description	Access
HSU_STA	1	ABh	HSU STAtus register	R/W
HSU_CTR	1	ACh	HSU ConTRol register	R/W
HSU_PRE	1	ADh	HSU PREscaler for baud rate generator	R/W
HSU_CNT	1	AEh	HSU CouNTer for baud rate generator	R/W

All information provided in this document is subject to legal disclaimers.

© NXP B.V. 2017. All rights reserved.

8.3.4.1 Mode of operation

The HSU supports only one operational mode, which has the following characteristics:

- Start bit:
  - Start bit is detected when a logic level 0 is asserted on the HSU_RX line.
- 8 data bits:
  - The data bits are sent or received LSB first.
- Stop bit:
  - During reception, the Stop bit(s) is detected when all the data bits are received and when Stop bit(s) is sampled to logic level 1. The number of Stop bits is programmable. It can be 1 or 2.
  - During Transmission, after the complete data bit transmission, a variable number of Stop bit(s) is transmitted. This number is programmable from 1 to 4.

8.3.4.2 HSU Baud rate generator

To reach the high speed transfer rate, the HSU has it own baud rate generator. The baud rate generator comprises a prescaler and a counter. The prescaler is located before the counter. The purpose of the prescaler is to divide the frequency of the count signal to enlarge the range of the counter (at the cost of a lower resolution). The division factor of the prescaler is equal to 2 to the power HSU_PRE[8:0] (Table 113 on page 71), resulting in division factors ranging from 1 (2^0) to 256 (2^8). The combination of these 2 blocks defines the bit duration and the bit sampling.

8.3.4.3 HSU preamble filter

Received characters are sent to the FIFO manager after three consecutive characters have been received: 00 00 FF. When the frame is finished, and before a new frame arrives, firmware shall write a logic level 1 in the start_frame bit of the HSU_CTR register to re-activate the preamble filter. If firmware does not write a logic level 1 then all characters of the frame are sent to the FIFO manager (including the preamble).

8.3.4.4 HSU wake-up generator

The wake-up generator is a 3-bit counter which counts on every rising edge of the HSU_RX pin. When the counter reaches 5, the hsu_on signal is set to logic level 1 in order to wake up the PN533. This block is useful in Soft-Power-down mode. The firmware shall reset this counter just before going in Soft-Power-down by writing a logic level 1 in the hsu_wu_en bit into the HSU_CTR register.

All information provided in this document is subject to legal disclaimers.

© NXP B.V. 2017. All rights reserved.

8.3.4.5 HSU_STA register

The SFR HSU_STA is the status register of the HSU.

Table 111. HSU_STA register (SFR: address ABh) bit allocation

Bit	7	6	5	4	3	2	1	0
Symbol	set_bit	-	-	disable_ preamb	irq_rx_ over_en	irq_rx_fer _ en	irq_rx_ over	irq_rx_fer
Reset	0	0	0	0	0	0	0	0
Access	R/W	R	R	R/W	R/W	R/W	R/W	R/W

Table 112. Description of HSU_STA bits

Bit	Symbol	Description
7	set_bit	When set to logic 0 during write operation, the bits set to logic 1 in the write command are written to logic level 0 in the register. When set to logic 1 during write operation, the bits set to logic 1 in the write command are written to logic level 1 in the register.
6 to 5	-	Reserved
4	disable_preamb	**Preamble filter disable.** When set to logic 1, this bit disables the preamble filtering, it means that HSU_RX line transmit any received bytes to the FIFO manager.
3	irq_rx_over_en	**FIFO overflow interrupt enable.** When set to logic 1, this bit enables the interrupt generation when the bit irq_rx_over is set to logic 1. The bit IE1_5 of register IE1 (see Table 13 on page 17) has also to be set to logic level 1 to enable the corresponding CPU interrupt.
2	irq_rx_fer_en	**Framing error interrupt enable.** When set to logic 1, this bit enables the interrupt generation when the bit irq_rx_fer is set to logic 1. The bit IE1_5 of register IE1 (see Table 13 on page 17) has also to be set to logic level 1 to enable the corresponding CPU interrupt.
1	irq_rx_over	**Receive FIFO overflow interrupt.** Set to logic 1 when the FIFO manager is full (rcv_ack is set to logic level 0) and when HSU shift register is ready to send another byte to the FIFO manager.
0	irq_rx_fer	**Framing error interrupt.** Set to logic 1 when a framing error has been detected. Framing error detection is based on Stop bit sampling. When Stop bit is expected at logic level 1 but is sampled at logic level 0, this bit is set to logic level 1.

All information provided in this document is subject to legal disclaimers.

© NXP B.V. 2017. All rights reserved.

8.3.4.6 HSU_CTR register

This register controls the configuration of the HSU.

Table 113. HSU_CTR register (SFR: address ACh) bit allocation

Bit	7	6	5	4	3	2	1	0
Symbol	hsu_wu_en	start_frame	tx_stopbit[1:0]		rx_stopbit	tx_en	rx_en	soft_reset_n
Reset	0	0	0	0	0	0	0	1
Access	R/W	R/W	R/W	R/W	R/W	R/W	R/W	R/W

Table 114. Description of HSU_CTR bits

Bit	Symbol	Description
7	hsu_wu_en	**HSU wake-up enable.** When set to logic 1 this bit re-activates the NSS / SCL / HSU_RX rising-edge counter. When the counter is 5 then a signal hsu_on is activated. This signal is one of the possible wake-up events from Soft-Power-down mode in the PCR block. The firmware shall set this bit to logic level 1 just before requesting a Soft-Power-down mode. The bit IE1_5 of register IE1 (see Table 13 on page 17) has also to be set to logic level 1 to enable the corresponding CPU interrupt.
6	start_frame	**Enables the preamble filter for next frame.** When set to logic 1 this bit indicates that a new frame is coming. This re-activates the preamble filter (when enabled), meaning that the first “00 00 FF” characters will not be sent to the FIFO manager.
5:4	tx_stopbit[1:0]	**Defines the number of stop bit during transmission.** These 2 bits define the number of Stop bit(s) inserted at the end of the transmitted frame. The number of Stop bit(s) transmitted is equal to tx_stopbit +1.
3	rx_stopbit	**Defines the number of stop bit during reception.** This bit defines the number of Stop bit(s) inserted at the end of the received frame. The number of Stop bit(s) expected in reception is equal to rx_stopbit +1.
2	tx_en	**Enables the transmission of HSU.** When set to logic 1 this bit enables the transmission of characters. When set to logic 0, the transmission is disabled only after the completion of the current transmission.
1	rx_en	**Enables the reception of the HSU.** When set to logic 1 this bit enables the reception of characters. When set to logic 0, the reception is disabled only after the completion of the current reception.
0	soft_reset_n	**HSU Reset.** When set to logic 0, this bit disables the clock of the HSU_RX control, HSU_TX control and baud rate generator modules.

All information provided in this document is subject to legal disclaimers.

© NXP B.V. 2017. All rights reserved.

8.3.4.7 HSU_PRE register

This register is used to configure the baud rate generator prescaler.The prescaler enlarges the range of the counter (at the cost of a lower resolution). The division factor of the prescaler ranges from 1 (2^0) to 256 (2^8).

Table 115. HSU_PRE register (SFR: address ADh) bit allocation

Bit	7	6	5	4	3	2	1	0
Symbol	hsu_prescaler[7:0]							
Reset	0	0	0	1	1	0	0	0
Access	R/W	R/W	R/W	R/W	R/W	R/W	R/W	R/W

Table 116. Description of HSU_PRE bits

Bit	Symbol	Description
7 to 0	hsu_prescaler[7:0]	In conjunction with HSU_CNT, defines the HSU baud rate. Baud rate = f_{clk} / ((hsu_prescaler +1) * hsu_counter)

8.3.4.8 HSU_CNT register

This register is used to configure the baud rate generator counter.

Table 117. HSU_CNT register (SFR: address AEh) bit allocation

Bit	7	6	5	4	3	2	1	0
Symbol	hsu_counter[7:0]							
Reset	0	1	1	1	0	0	0	0
Access	R/W	R/W	R/W	R/W	R/W	R/W	R/W	R/W

Table 118. Description of HSU_CNT bits

Bit	Symbol	Description
7 to 0	hsu_counter[7:0]	In conjunction with HSU_PRE, defines the HSU baud rate. Baud rate = f_{clk} / ((hsu_prescaler +1) * hsu_counter)

Here is a table of recommendation for some data rates:

Table 119. Recommendation for HSU data rates

Targeted data rate	HSU_CNT value	HSU_PRE value	Real HSU freq	Min recommended Host HSU freq	Max recommended Host HSU freq
9 600	0x71	0x18	9 516	9 326	9 706
19 200	0x9D	0x08	19 193	18 810	19 576
38 400	0x65	0x06	38 359	37 592	39 126
57 600	0x9D	0x02	57 579	56 428	58 730
115 200	0xEB	0x00	115 404	113 096	117 712
230 400	0x76	0x00	229 831	225 234	234 427
460 800	0x3B	0x00	459 661	450 467	468 854
921 600	0x1D	0x00	935 172	916 468	953 875
1 288 000	0x15	0x00	1 291 429	1 265 600	1 317 257

All information provided in this document is subject to legal disclaimers.

© NXP B.V. 2017. All rights reserved.

8.3.5 USB

The USB module is an USB2.0 compliant device with embedded function.
Special power management features such as a clock divider and clock switch are also implemented in the device.

8.3.5.1 Features list

The USB module is a USB device only supporting full speed communication scheme. All embedded functions are passed to the micro controller.

The USB module includes the following features:

- SoftConnect supported
- Command GetFrameNumber supported
- Interrupt signaling to mController
- Control EP0 endpoint of 8 bytes
- 3 interrupt endpoints of 8 bytes
- 2 bidirectional bulk endpoints of 64 bytes
- resume by host
- remote wake up

The endpoints setup is described in the following table.

Table 120. Endpoints Setup

Logical Endpoints	OUT Type	IN Type	OUT Map	IN Map	OUT size	IN size	Note
Device function description							
0	Control	Control	0.0	0.1	8	8	
1	-	Int	-	0.2		8	
2	-	Int	-	0.3		8	
3	-	Int	-	0.4		8	
4	Bulk	Bulk	0.5	0.6	64	64	

8.3.5.2 USB interrupt

The interrupt line of the USB module is asserted to indicates to the microcontroller that there was a transaction on one of the endpoints, or that there is new status information available.

All information provided in this document is subject to legal disclaimers.

© NXP B.V. 2017. All rights reserved.

8.3.5.3 Resume by host

Resume by host in suspend state: After 3 ms of no USB activity on the bus, the device goes in suspend. About 2 ms later the device will indicate that it no longer needs the clock (Clk_Enable_N becomes inactive).

The host can then send a resume to the device. The device needs to wake up and will require the main clock (USB_Clk_Enable_N becomes active). The main clock starts running after complete PCR wake up sequence. PLL_LOCK indicates that the main clock is running stable(a PLL can need several ms to start running at the specified frequency). The device then knows that the clock is present and can go out of suspend.

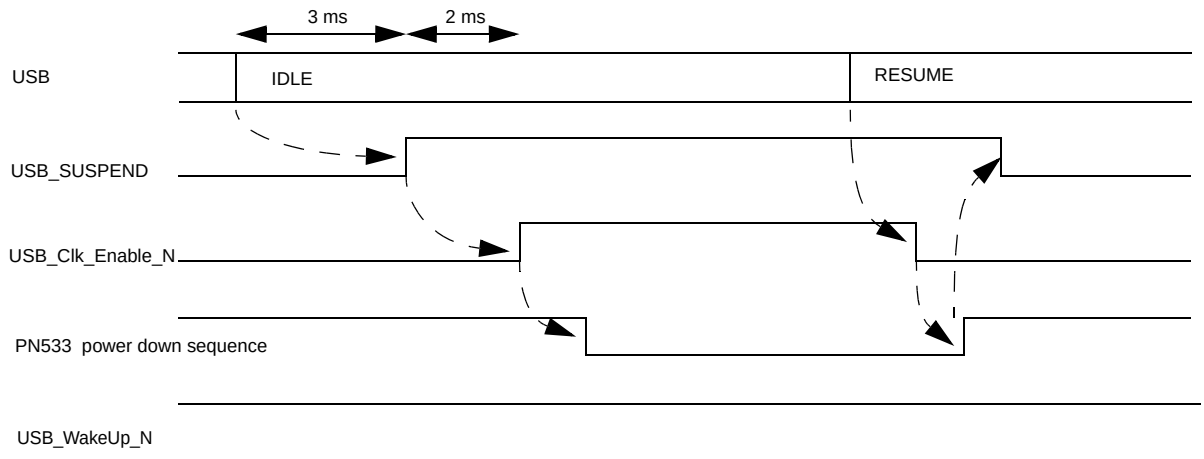

Fig 14. Resume by host/clocks stopped

All information provided in this document is subject to legal disclaimers.

© NXP B.V. 2017. All rights reserved.

Resume by Host before clock is disabled: The host can decide to wake up a suspended device, before the device has switched off its main clock. The device then simply goes out of suspend.

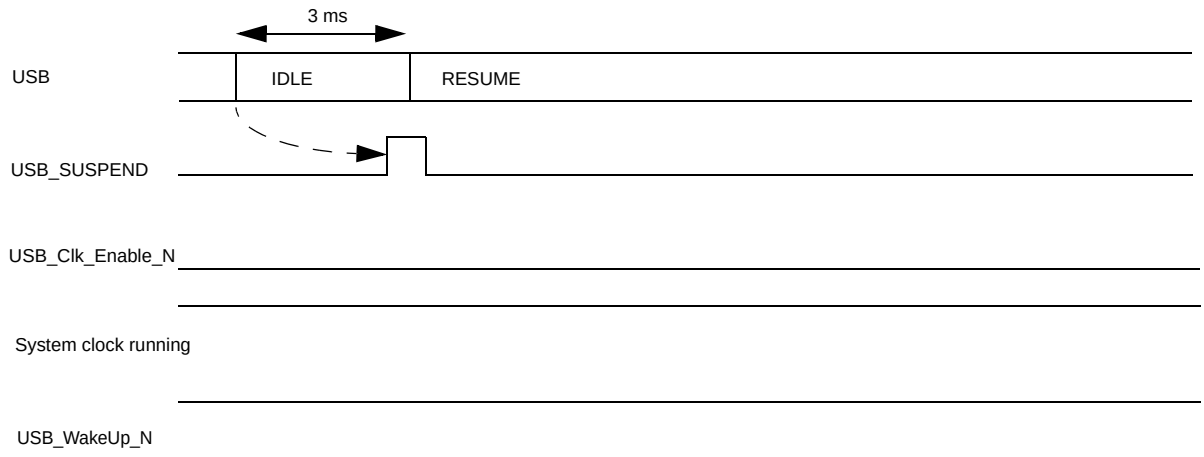

Fig 15. Resume by host / clocks running

8.3.5.4 Remote wake up

The remote wake up implemented in the PN533 platform is partly controlled by the micro controller as depicted below:

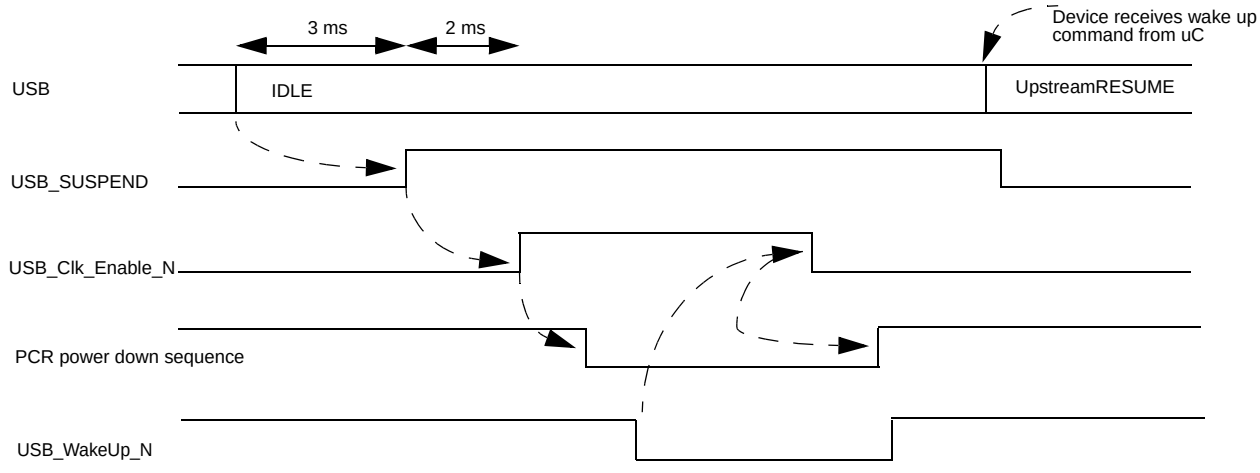

Fig 16. RemoteWakeUp by uC

When a remote wake up is requested on an external interrupt (P32_INT0, P33_INT1) or a RF detector event, the Power Clock and Reset controller (PCR):

- enables the 27.12 MHZ oscillator,
- generates an interrupt to resume the CPU from Power-down mode,
- then the CPU enable the 4 MHZ oscillator, the PLL and the 48 MHZ clock.

The CPU sends a command to the USB module to perform a USB remote wake up, then the USB module exits from suspend mode and sends a resume on its upstream port.

All information provided in this document is subject to legal disclaimers.

© NXP B.V. 2017. All rights reserved.

Resume by Remote Wake up before clock is disabled: Resume by Remote Wake up before clock is disabled

If USB_WakeUp_N is made active before the main clock is switched off (USB_Clk_Enable_N becomes inactive), the device waits until it has been suspended for 2 ms, then wakes up and sends a resume on its upstream port.

8.3.5.5 Softconnect

The following figure shows how the embedded firmware Controlled Connect can be implemented.

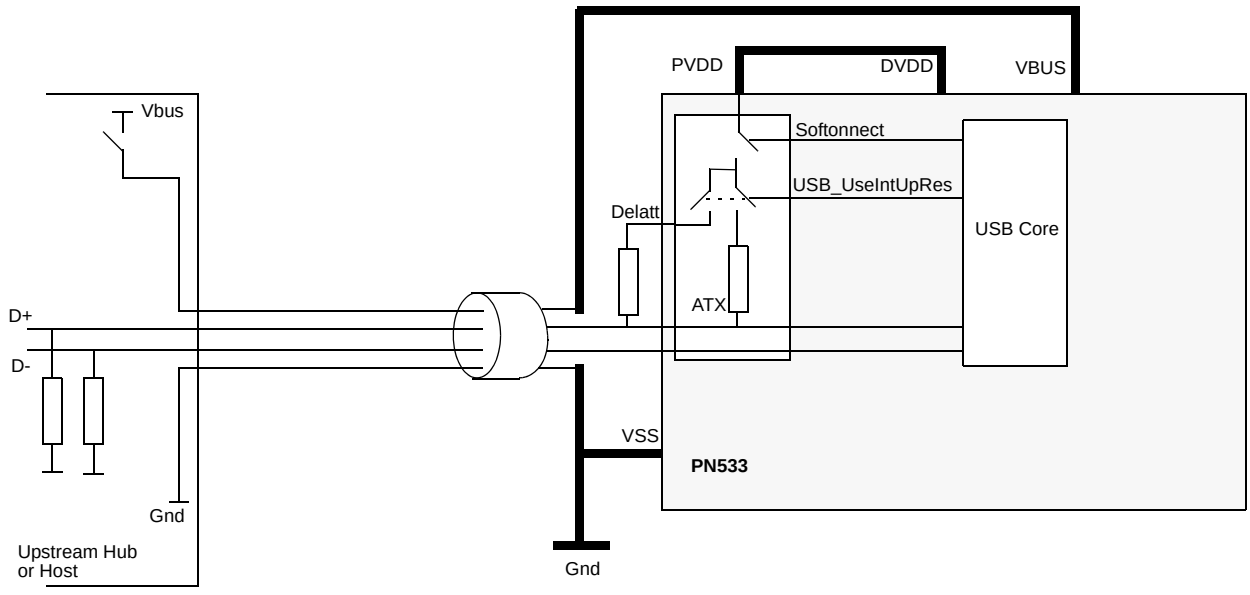

Fig 17. SoftConnect connection

When USB_SoftConnect_N is active, one of the data lines (D+) must be pulled high. This is done by using internal switch.

The internal pull up resistor or an external resistor (connected to delatt) can be used to perform the soft connection. The selection of the pull-up resistor to use is made through the USB configuration register. Refer to

Table 121 on page 76

Table 121. USB configuration register (6000h)

Bit	Name	Description	Reset	R/W
7 to 6	-	Reserved	xx	R/W
5	USB_UseIntUpRes	It controls switch for internal Upstream resistor when set to logic level 1; external pull up resistor is used. When set to logic level 0; internal pull up resistor is used.	0	R/W
4 to 0	-	Reserved	xxxxx	R/W

All information provided in this document is subject to legal disclaimers.

© NXP B.V. 2017. All rights reserved.

8.3.5.6 USB embedded firmware view

The USB module is mapped into the XRAM memory space. It is accessible into the peripheral area on the host if internal bus. The communication between the CPU and the USB module is based on a sequence of command and data exchange.

Table 122. USB Extension memory map

Physical Address		Size (Bytes)	Description	Peripheral selected
First	Last			
0x6003	0x6003	1	Write command to USB module	USB
0x6002	0x6002	1	Write data to USB module	USB
0x6001	0x6001	1	Read data from USB	USB
0x6000	0x6000	1	USB configuration	USB

USB Instruction set: The USB instruction set is described here after.

Table 123. USB Instruction set

Name	Recipient	Coding	Data Phase
Get Chip ID	Device	FDh	Read 2 bytes
Get ErrorCode	Device	FFh	Read 1 byte
Get Device Status	Device	FEh	Read 1 byte
Set Device Status	Device	FEh	Write 1 byte
Get Current Frame Number	Device	F5h	Read 2 bytes
Get Interrupt Register	Device	F4h	Read 2 bytes
Set Mode	Device	F3h	Write 2 bytes
Set Endpoints Enable	Device	D8h	Write 2 bytes
Set Address / Enable	Embedded Function	D0h	Write 1 byte
Get Embedded Port Status	Embedded Function	E0h	Read 1 byte
Set Embedded Port Status	Embedded Function	E0h	Write 1 byte
Select Endpoint	Function Control OUT	00h	Read 1 byte (opt)
	Function Control IN	01h	Read 1 byte (opt)
	Function Endpoint 1 IN	02h	Read 1 byte (opt)
	Function Endpoint 2 IN	03h	Read 1 byte (opt)
	Function Endpoint 3 IN	04h	Read 1 byte (opt)
	Function Endpoint 4 OUT	05h	Read 1 byte (opt)
	Function Endpoint 4 IN	06h	Read 1 byte (opt)
	Reserved	07h	-
	Reserved	08h	-
	Reserved	09h	-
Select Endpoint / Clear Interrupt	Function Control OUT	40h	Read 1 byte
	Function Control IN	41h	Read 1 byte
	Function Endpoint 1 IN	42h	Read 1 byte

All information provided in this document is subject to legal disclaimers.

© NXP B.V. 2017. All rights reserved.

Table 123. USB Instruction set *...continued*

Name	Recipient	Coding	Data Phase
	Function Endpoint 2 IN	43h	Read 1 byte
	Function Endpoint 3 IN	44h	Read 1 byte
	Function Endpoint 4 OUT	45h	Read 1 byte
	Function Endpoint 4 IN	46h	Read 1 byte
	Reserved	47h	-
	Reserved	48h	-
	Reserved	49h	-
Set Endpoint Status	Function Control OUT	40h	Write 1 byte
	Function Control IN	41h	Write 1 byte
	Function Endpoint 1 IN	42h	Write 1 byte
	Function Endpoint 2 IN	43h	Write 1 byte
	Function Endpoint 3 IN	44h	Write 1 byte
	Function Endpoint 4 OUT	45h	Write 1 byte
	Function Endpoint 4 IN	46h	Write 1 byte
	Reserved	47h	-
	Reserved	48h	-
	Reserved	49h	-
Read Buffer	Selected Endpoint	F0h	Read n bytes
Write Buffer	Selected Endpoint	F0h	Write n bytes
Clear Buffer	Selected Endpoint	F2h	Read 1 byte (opt)
Validate Buffer	Selected Endpoint	FAh	none

Get VChip ID: Command: FDh

Data: Read 2 bytes

The Chip Identification is 12 bits wide. The command divides the chip Identification in bytes and returns the least significant byte first. The value of this chip ID can be determined at integration time.

The following table shown the configuration of these 2 bytes:

Table 124. Get Chip ID bytes

Bit Position	7	6	5	4	3	2	1	0
Byte 0	DEVREV[1]							
Byte 1	0	0	0	0	DEVNAME[2]			

[1] hardware setting (8 bits) same as DEVREV, see “Device Descriptor”.

[2] hardware setting (4 bits) same as DEVNAME, see “String Descriptor”

All information provided in this document is subject to legal disclaimers.

© NXP B.V. 2017. All rights reserved.

Get ErrorCode: Command: FFh

Data: Read 1 byte

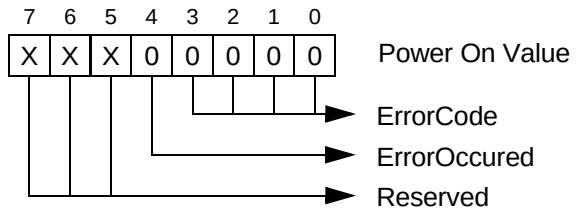

Fig 18. ErrorCode Register

Note that this is a debug command and should not be used for normal operation.

The 'Get Error Code command returns the error code of the last generated error, this command is for debugging purposes only. The 4 least significant bits form the error code. Bit 4 'Error Occurred' can be cleared by each new transfer.

The following table gives an overview of the Error Codes.

Table 125. Error codes

Error Code	Description
0000	No Error
0001	PID Encoding Error
0010	Unknown PID
0011	Unexpected Packet
0100	Error in Token CRC
0101	Error in Data CRC
0110	Time Out Error
0111	Babble
1000	Error in End of Packet
1001	Sent NAK
1010	Sent Stall
1011	Buffer Overrun Error
1100	Sent Empty Packet (ISO only)
1101	Bitstuff Error
1110	Error in Sync
1111	Wrong Toggle Bit in Data PID, ignored data

Get Device Status: Command: FEh

Data: Read 1 byte

The Get Device Status command returns the Device Status Register. Cf. the Set Device Status command.

When SuspendChange, ConnectChange and BusReset bit are set, the appropriate bit in the interrupt register is set and an interrupt is generated to the micro-controller.

The BusReset, SuspendChange and ConnectChange bit are reset by this command.

All information provided in this document is subject to legal disclaimers.

© NXP B.V. 2017. All rights reserved.

Set Device Status: Command: FEh

Data: Write 1 byte

The Set Device Status command changes the Device Status Register. The value of Read Only bits is ignored.

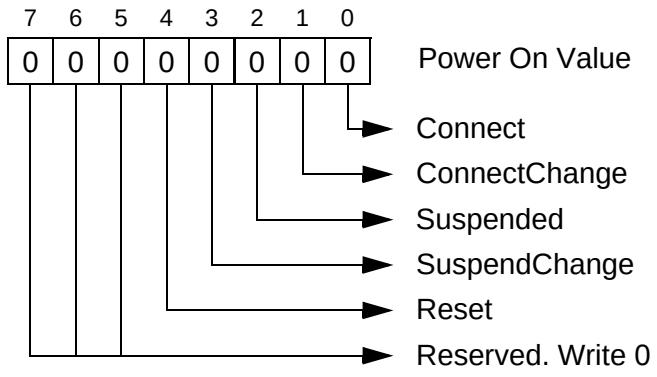

Fig 19. Device Status Register

- Connect: R/W — Writing ’1’ will allow the device to connect its pull up resistor. Writing ’0’ forces a disconnect. Reading returns the current connect status.
- ConnectChange: R — Change of the connect status. Reading clears the bit.
- Suspended: R/W — This bit represents the current Suspend state. It is set to ’1’ when the device hasn’t seen any activity on its upstream port for more than 3 ms. It is reset to ’0’ on any activity.

  When the device is in suspend state (Suspended bit = ’1’) and the microcontroller writes a ’0’ into it, the device will generate a remote wake up. When the device is not suspended, writing a ’0’ has no effect. Writing a ’1’ into this register has never an effect.
- SuspendChange: R — The Suspend Change bit is set to ’1’ when the Suspended bit toggles. The Suspend bit can toggle because:
  - The device goes in the suspended state
  - The device receives resume signalling on its upstream port

  The Suspend Change bit is reset after the register has been read.
- Reset: R — The Reset bit is set when the device receives a bus reset. It is cleared when read.On a bus reset the device will automatically go to the default state (unconfigured and responding to address 0).

All information provided in this document is subject to legal disclaimers.

© NXP B.V. 2017. All rights reserved.

Get Current Frame Number: Command: F5h

Data: Read 1 or 2 byte(s)

Data: Write 2 bytes

Get interrupt register: Command: F4h

Data: Read 2 bytes

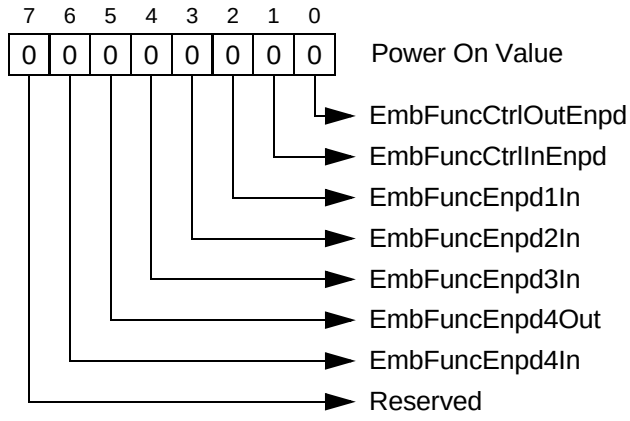

Fig 20. Interrupt Register byte 1

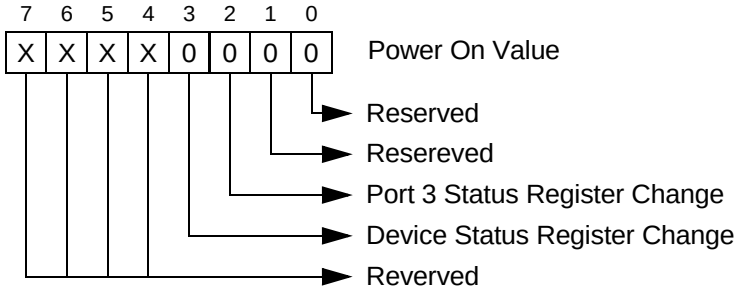

Fig 21. Interrupt Register byte 2

This command indicates the origin of an interrupt. The endpoint interrupt bits (bits 0 to 9) are cleared by selecting the endpoint. The device status register change bit is reset by reading the device status change register. The Port Status Change Register change bit is reset by reading the port Status Change Register.

Set Mode:

Command: F3h
Data: Write 2 bytes

0.0.1 Set Mode
Command: F3h
Data: Write 2 bytes

All information provided in this document is subject to legal disclaimers.

© NXP B.V. 2017. All rights reserved.

Configuration byte:

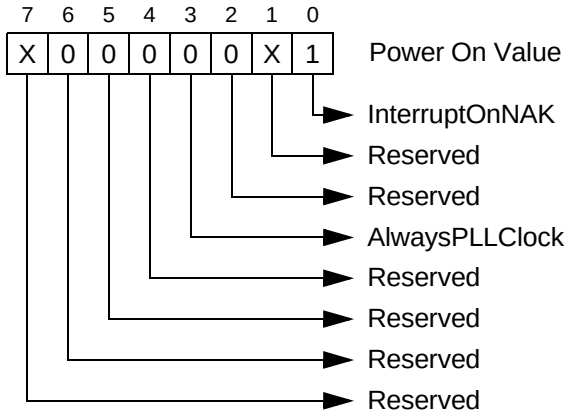

Fig 22. Configuration byte

- InterruptOnNAK: A ’1’ indicates that "NAKing" is reported and will generate interrupt. A ’0’ indicates that only successful transactions are reported.
- AlwaysPLLClock: A ’1’ indicates that the internal clocks and PLL are always running even during suspend state. A ’0’ indicates that the internal clock, crystal oscillator and PLL are stopped whenever not needed. To meet the strict suspend current requirement, this bit needs to be set to ’0’.

Clock division

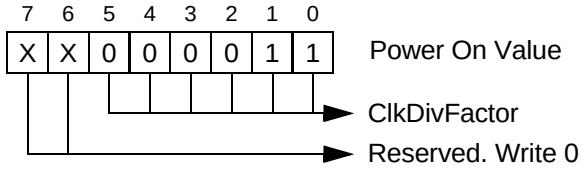

Fig 23. Clock division

- ClkDivFactor: The value indicates clock division factor for CLOCKOUT. The output frequency is 48 MHz/(N+1) where N is the Clock Division Factor. The reset value is 3. This will produce the output frequency of 12 MHz which can then be programmed up (or down) by the user. This design ensures no glitching during frequency change. The programmed value will not be changed by a bus reset.

All information provided in this document is subject to legal disclaimers.

© NXP B.V. 2017. All rights reserved.

Set Endpoints Enable: Command: D8h

Data: Write 2 bytes

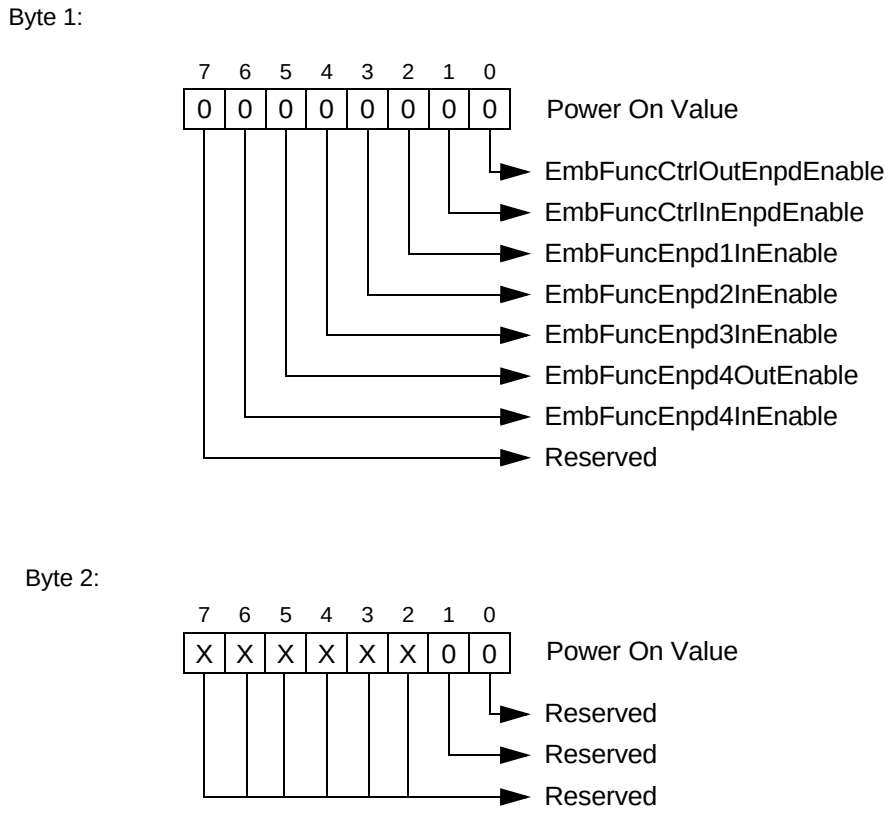

Fig 24. Endpoints enable bytes

This command provides endpoint enable. The enable is defined on physical endpoint level meaning that for one endpoint the IN and OUT direction can be enabled separately.

Set Address/Enable: Command: D0h

Data: Write 1 byte

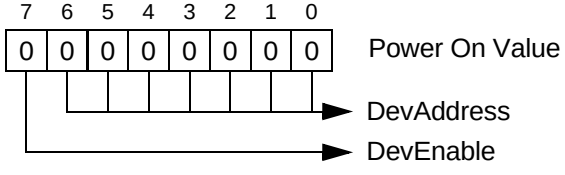

Fig 25. Address enable byte

- DevAddress: The value written becomes the address.
- DevEnable: A ‘1’ enables this function

All information provided in this document is subject to legal disclaimers.

© NXP B.V. 2017. All rights reserved.

Get Embedded Port Status: Command: E0h

Data: Read 1 byte

When SuspendChange and BusReset bit are set, the appropriate bit in the interrupt register is set and an interrupt is generated to the micro-controller.

The Get Embedded Port Status command returns the Embedded Port Status Register. The BusReset, SuspendChange and ConnectChange bit are reset by this command.

Set Embedded Port Status: Command: E0h

Data: Write 1 byte

The Set Embedded Port Status command changes the Embedded Port Status Register. The value of Read Only bits is ignored.

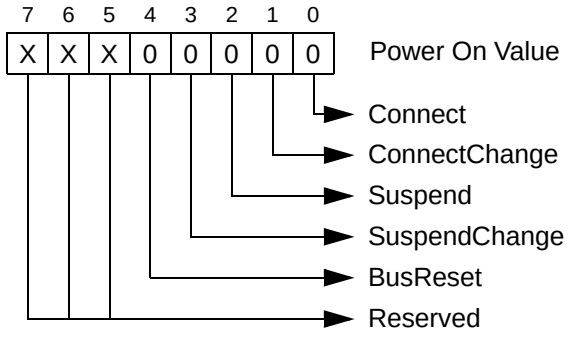

Fig 26. Embedded Port Status register

- Connected: R/W Writing ’1’ will connect this embedded port. Writing ’0’ will disconnect this embedded port.
- ConnectChange: R Change of the connect status. Reading clears the bit.
- Suspend: R/W Embedded port is suspended. Writing ’0’ causes a remote wake-up if this embedded port is suspended. Writing a ’1’ has no effect.
- SuspendChange: R Suspend state changed. Reading clears the bit

BusReset:REmbedded Port received a SetPortFeature(Reset) request. Reading clears the bit, puts the port into the enabled state and reports the end of the reset to the host.

All information provided in this document is subject to legal disclaimers.

© NXP B.V. 2017. All rights reserved.

Select Endpoint: Command: 00h - 09h

Data: Read 1 byte (Optional)

This command initializes an internal pointer to the start of the Selected buffer. Optionally, this command can be followed by a data read, which returns some additional info on the packet in the buffer.

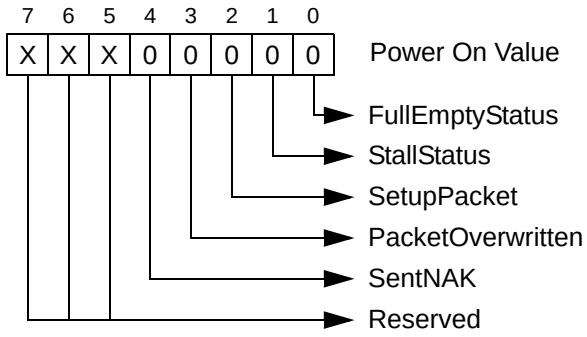

Fig 27. Select Endpoint byte

- FullEmptyStatus: A “1” indicates the buffer of the selected endpoint is full, “0” indicates an empty buffer.In case of an OUT endpoint, this bit is cleared by executing the Clear Buffer Command, if the buffer has not been over written.

  In case of an IN endpoint, this bit is set by the Validate Buffer command.
- StallStatus: A “1” indicates the selected endpoint is in the stall state.
- SetupPacket: A “1” indicates the last received packet for the selected endpoint was a setup packet.The value of this bit is updated after each successfully received packet (i.e. an ACKED package on that particular physical endpoint).

  It is cleared by doing a Select Endpoint/Clear Interrupt on this endpoint
- PacketOverwritten: ’1’: The previously received packet was over written by a setup packet.

  The value of this bit is cleared by the ’Select Endpoint/Clear Interrupt’ command.
- SentNAK: ’1’: The device has sent a NAK. If the host sends an OUT packet to a filled OUT buffer, the device returns NAK. It the host sends an IN token to an empty IN buffer, the device returns NAK.

  This bit is set when a NAK is sent and the Interrupt On NAK feature is enabled. This bit is reset after the device has sent an ACK after an OUT packet or when the device has seen an ACK after sending an IN packet. This bit is only defined for the two physical control endpoints.

All information provided in this document is subject to legal disclaimers.

© NXP B.V. 2017. All rights reserved.

Select Endpoint/Clear Interrupt: Command: 40h - 49h

Data: Read 1 byte

Commands 40h to 49h are identical to their Select Endpoint equivalent, with the following differences:

- The command clears the associated interrupt
- The command clear the Setup and Overwritten bits in case of a control out endpoint
- The read of one byte is mandatory

Set Endpoint Status: Command: 40h - 49h

Data: Write 1 byte

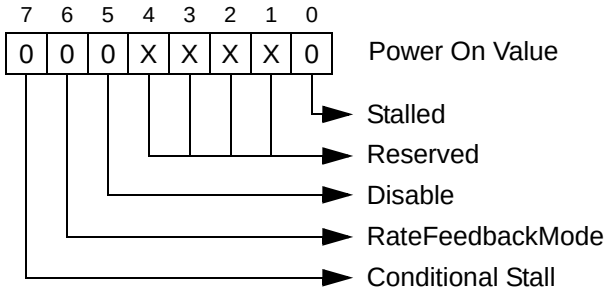

Fig 28. Endpoint Status byte

- Stalled: A “1” indicates the endpoint is stalled.
- Disable: A “1” indicates the endpoint is disabled. After a bus-reset each endpoint is enabled, i.e., this bit is set to ’0’.
- RateFeedbackMode: ’0’: Interrupt endpoint in ’toggle mode’
  ’1’: Interrupt endpoint in ’rate feedback mode’
- Conditional Stall: ’1’: Stall both endpoint zero endpoints, unless the ’Setup Packet’ bit is set. It is only defined for control OUT endpoints

Read Buffer: Command: F0h

Data: Read up to n+2 bytes

’n’ is equal to the number of data bytes in the selected buffer.

This command is followed by a number of data reads, which return the contents of the selected endpoint data buffer. After each read, the internal buffer pointer is incremented by 1.

The buffer pointer is not reset to the beginning of the buffer by this command. This means that reading or writing a buffer can be interrupted by any other command (except for Select Endpoint).

All information provided in this document is subject to legal disclaimers.

© NXP B.V. 2017. All rights reserved.

The data in the buffer are organized as follow:

Table 126. Read buffer bytes

Bit Position	7	6	5	4	3	2	1	0
Byte 0	0/1	0/1	-	-	-	-	-	-
Byte 1	-	Number of Data bytes in buffer						
Byte 2	Data byte 0							
...								
Byte n+1	Data Byte n -1							

Write Buffer: Command: F0h

Data: Write up to n+2 bytes

'n' is equal to the number of data bytes in the selected buffer.

This command is followed by a number of data writes, which load the data buffer of the selected endpoint. After each write, the internal pointer is incremented by 1. The buffer pointer is not reset to the beginning of the buffer by the Write Buffer command. This means that writing a buffer can be interrupted by any other command (except for Select Endpoint).

The data in the buffer are organized as follow:

Table 127. Write buffer bytes

Bit Position	7	6	5	4	3	2	1	0
Byte 0	0/1	0/1	-	-	-	-	-	-
Byte 1	-	Number of Data bytes in buffer						
Byte 2	Data byte 0							
...								
Byte n+1	Data Byte n -1							

Clear Buffer: Command: F2h

Data: Read 1 byte (Optional)

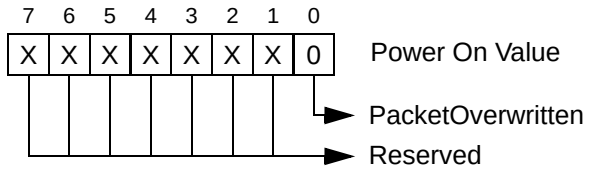

Fig 29. Clear buffer byte

When a packet is received completely, an internal endpoint buffer full flag is set. All subsequent packets will be refused by returning a NAK. When the microcontroller has read the data, it should free the buffer by the Clear Buffer command. When the buffer is cleared new packets will be accepted.

When bit '0' of the optional data byte is '1', the previously received packet was over written by a Setup Packet. A buffer cannot be cleared when its Packet Overwritten bit is set.

All information provided in this document is subject to legal disclaimers.

© NXP B.V. 2017. All rights reserved.

Validate Buffer: Command: FAh

Data: None

When the microprocessor has written data into an IN buffer, it should set the buffer full flag by the Validate Buffer command.

This indicates that the data in the buffer is valid and can be sent to the host when the next IN token is received. A control IN buffer cannot be validated when the Packet Overwritten bit of its corresponding OUT buffer is set.

All information provided in this document is subject to legal disclaimers.

© NXP B.V. 2017. All rights reserved.

8.4 Power management

This chapter defines the power distribution scheme according to the different system configuration. The PN533 can be supplied by the USB connector on VBUS or directly on the VBUS, AVDD, DVDD, PVDD and TVDD. Regarding the system configuration (USB BUS powered, USB non bus powered or HOST powered), the power distribution shall be different.

8.4.1 USB bus powered

The power distribution is performed from the USB bus. The power delivered to the different peripherals is controlled by the PN533 chip. The Figure 30 "USB bus powered"depicts the system approach for the power distribution. When PN533 is supplied by the USB connector (USB powered) an internal regulator generates the supply voltage for all the parts, and during the power up phase the inrush current is limited to 100mA.

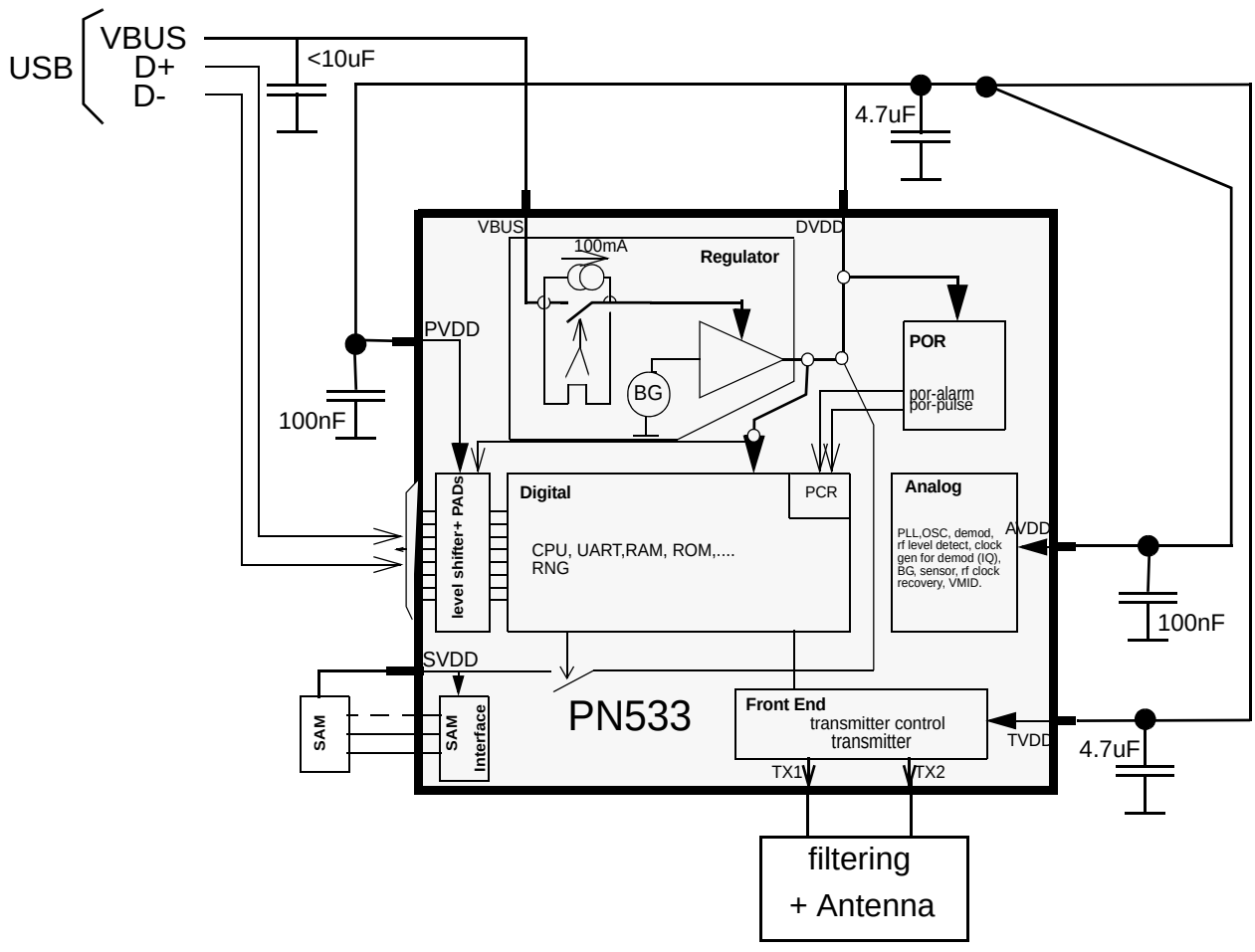

Fig 30. USB bus powered

All information provided in this document is subject to legal disclaimers.

© NXP B.V. 2017. All rights reserved.

8.4.2 USB non bus powered

In this mode, the power distribution can be either HOST powered single source or HOST powered double source as described in Section 8.4.3 “HOST powered (single source)” and in Section 8.4.4 “HOST powered (double source)”. The D+ and D- IOs are referred to PVDD. The application shall take care of eventual voltage compatibility and compliancy to standards.

8.4.3 HOST powered (single source)

In that case, the power distribution is performed from a single power supply source. The Figure 31 “HOST powered from single source” depicts the system approach for the power distribution.

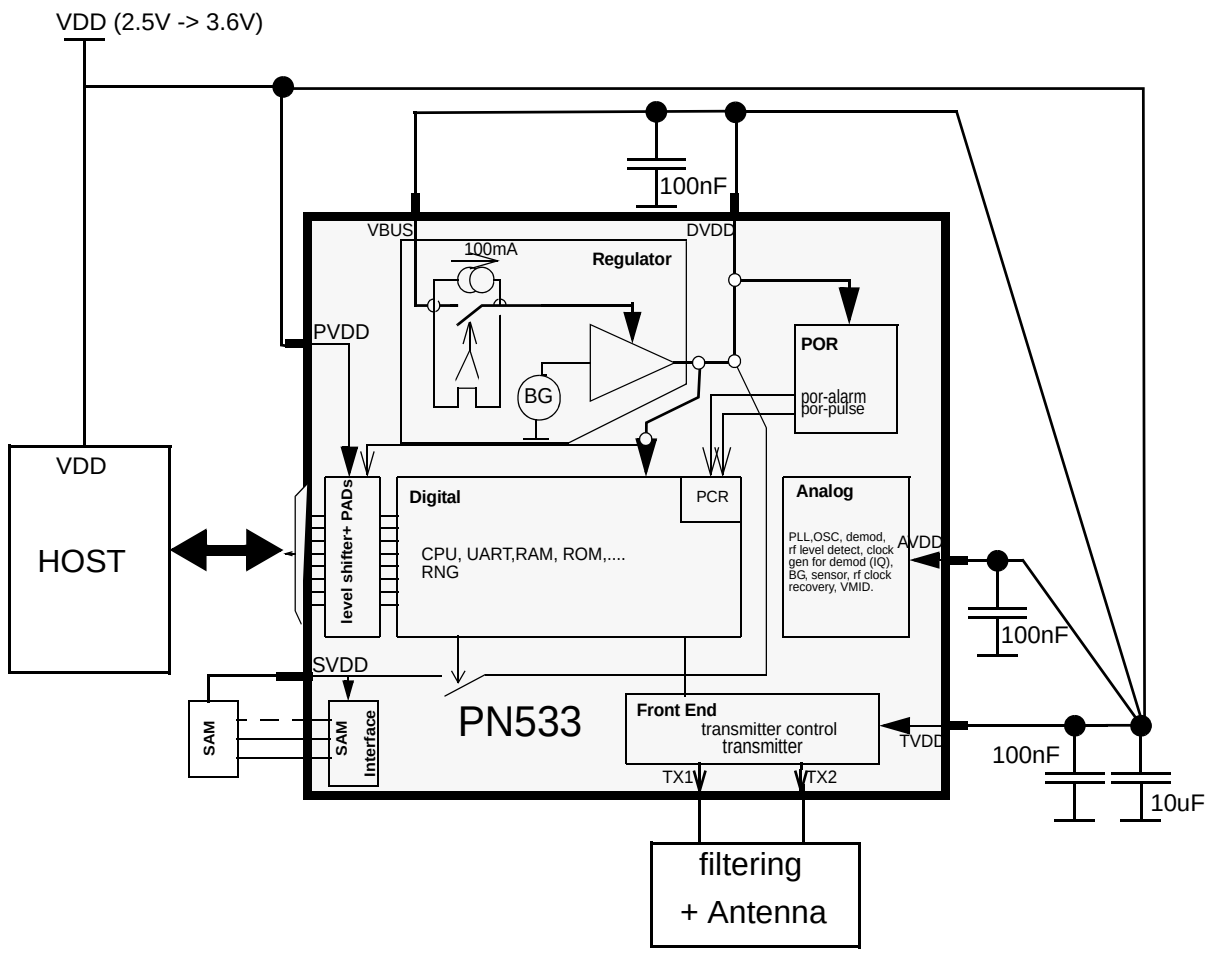

Fig 31. HOST powered from single source

All information provided in this document is subject to legal disclaimers.

© NXP B.V. 2017. All rights reserved.

8.4.4 HOST powered (double source)

The power distribution is performed from the second source from the Host. The Figure 32 "HOST powered from double source" depicts the system approach for the power distribution.

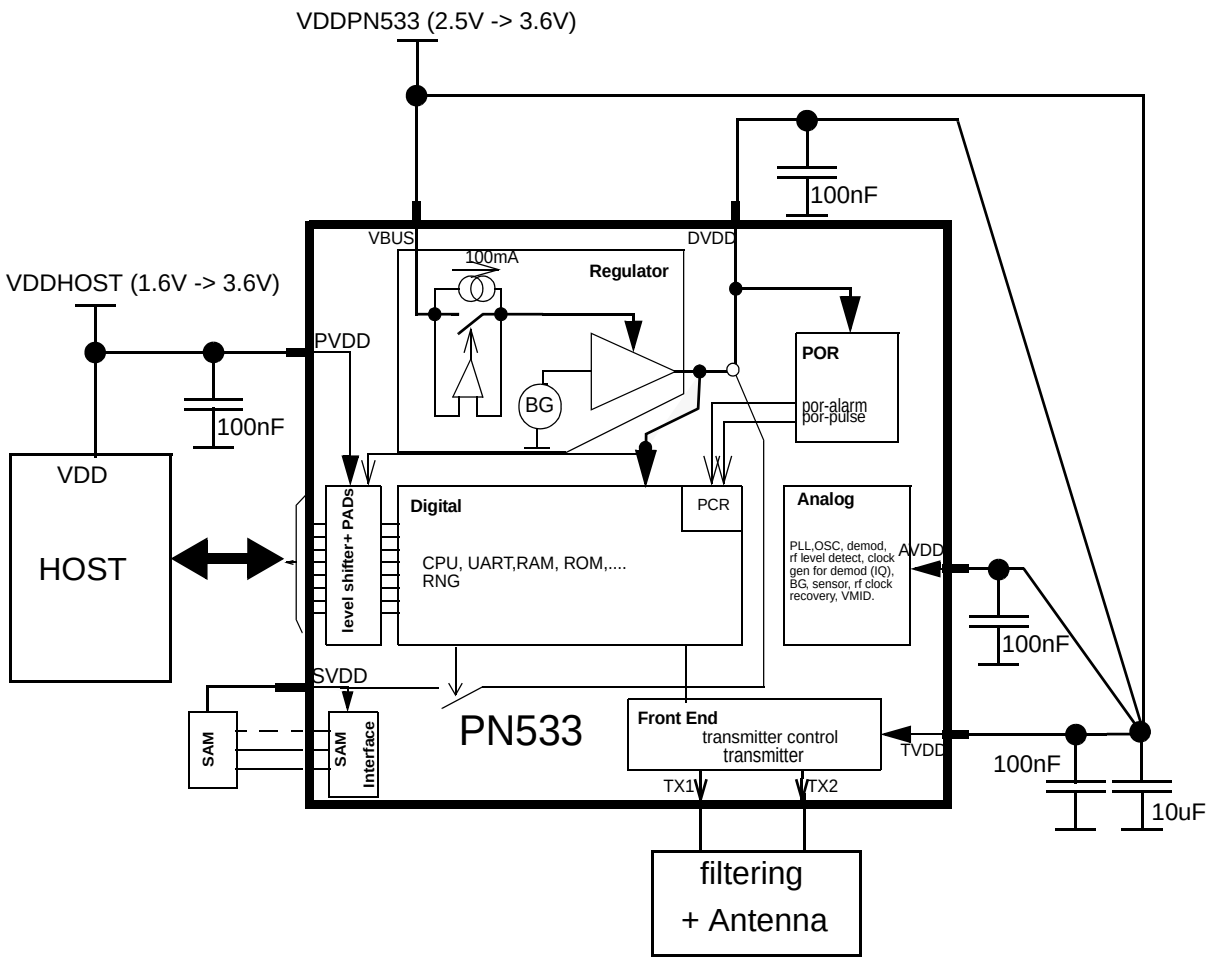

Fig 32. HOST powered from double source

All information provided in this document is subject to legal disclaimers.

© NXP B.V. 2017. All rights reserved.

8.4.5 Low power modes

There are 2 different low power modes.

- “Hard power-down” controlled by the pin RSTPD_N. In that case, the PN533 enters into the reset state and the maximum consumption depends on the connection of PN533 to the USB bus or not.
- “Soft power-down” controlled by a register. In that case, the PN533 enters into the idle state and the maximum consumption depends if PN533 is “USB powered” or not and if the RF detector is active or not. In that mode the PN533 can be waken up on external events.

Table 128. Current consumption in power down

Low power mode	Power supply source	Maximum current consumption
Suspend	Powered from USB	200 μA (without resistors on D+ / D-)
Suspend with RF detector active	Powered from USB	250 μA (without resistors on D+ / D-)
hard power-down	Not powered from USB	10 μA
soft power-down	Not powered from USB	25 μA
soft power-down with RF detector active	Not powered from USB	30 μA

8.4.6 Power-on reset

The Power On Reset (POR) module generates the reset signals for the different parts of PN533.

The Power On Reset module is used to control the power up, power down and reset phase of PN533.

As soon as, VDD reaches Vth+Vhys, the system startup phase starts under control of the PCR.

When the RSTPD_N is asserted, all internal current source are cut and PN533 enters reset phase.

When the power supply voltage drops below Vth, the IC goes into reset.

All information provided in this document is subject to legal disclaimers.

© NXP B.V. 2017. All rights reserved.

8.4.7 Regulator - short description

The regulator is used to reduce the VBUS voltage to the typical operating voltage of PN533.

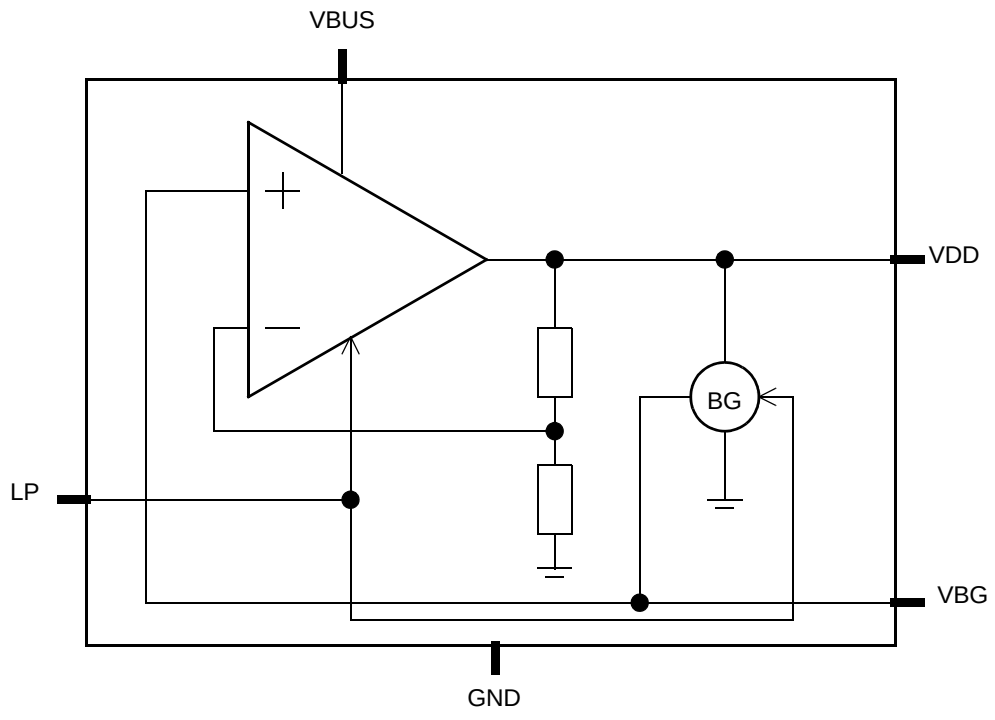

Fig 33. 3.3 V regulator block diagram

The 3.3V regulator is a linear regulator with resistive feed-back. The regulator uses the Band-gap for reference voltage

8.4.8 Main switch

In USB bus powered configuration, the PN533 is plugged on a USB connector. The main switch limits the inrush current to 100 mA max during the powerup. The inrush current limitation can be disabled through the bit curlimoff (Table 129 “Control_switch_rng register (address 6106h) bit allocation”).

All information provided in this document is subject to legal disclaimers.

© NXP B.V. 2017. All rights reserved.

8.4.9 SVDD switch

The SVDD switch is used to control power to the secure IC. The switch is controlled by register Control_switch_rng (address 6106h). The switch is enabled with bit sic_switch_en. When disabled, the SVDD pin is tied to ground. A current limiter is incorporated into the switch. Current consumption exceeding 40 mA triggers the limiter and the status bit sic_switch_overload is set.

Register Control_switch_rng also controls the random generator within the Contactless Interface Unit (CIU) and the regulator current limitation.

Table 129. Control_switch_rng register (address 6106h) bit allocation

Bit	7	6	5	4	3	2	1	0
Symbol	-	hide_svdd _sig	sic_switch _overload	sic_switch _en	curlimoff	cpu_need _ rng	random_ dataready	-
Reset	0	1	0	0	0	0	0	1
Access	R	R/W	R	R/W	R/W	R/W	R/W	R

Table 130. Description of Control_switch_rng bits

Bit	Symbol	Description
7	-	Reserved.
6	hide_svdd_sig	**Configures internal state of input signals SIGIN and P34 when idle.** This bit can be used to avoid spikes on SIGIN and P34 when the SVDD switch is enabled or disabled. When set to logic 0, internal state of SIGIN and P34 are driven by pads SIGIN and P34 respectively. When set to logic 1, internal state of SIGIN is set to logic level 0 and internal state of P34 is set to logic 1.
5	sic_switch_overload	**Indicates state of SVDD switch current limiter.** When set to logic 0, indicates that current consumption through SVDD switch does not exceed limit (40 mA). When set to logic 1, the SVDD switch current limiter is activated.
4	sic_switch_en	**Enables or disables power to SVDD switch.** When set to logic 0, SVDD switch is disabled and SVDD output is tied to the ground. When set to logic 1, the SVDD switch is enabled and the SVDD output delivers power to secure IC and internal pads (SIGIN, SIGOUT and P34).
3	curlimoff	**Configure the regulator to deliver more current than 100 mA.** When set to 0, the 100 mA current limitations is activated. When set to 1, the 100 mA current limitations is desactivated.
2	cpu_need_rng	**Forces random number generator into running mode**. When set to logic 0, random number generator is under control of Contactless Interface Unit. When set to logic 1, random number generator is forced to run.
1	random_dataready	**Indicates availability of random number.** When set to logic 1, a new random number is available. Automatically set to logic 0 when register data_rng (address 6105h) is read.
0	-	Reserved.

All information provided in this document is subject to legal disclaimers.

© NXP B.V. 2017. All rights reserved.

8.5 Power clock and reset controller

The PCR controller is the controller for the clock generation, power management and reset architecture for the PN533.

8.5.1 PCR in the system

This block diagram Figure 34 “PN533 Power Management block diagram” shows the relationship between the PCR, other embedded blocks and external signals.

Table 131. PN533 clock source characteristics

Clock name	Frequency MHz	Tolerance	Clock source	Comments
OSC_CLK27	27.12	± 14 kHz	OSC 27.12	Output of OSC 27
PLL_CLK96	96	± 0.25%	USB PLL	Output of USB PLL
USB_CLK	48	± 0.25%	USB PLL	
CPU_CLK	27.12/13.56/6.78		OSC 27	Default is 6.78 MHz
HSU_CLK	27.12		OSC 27	

All information provided in this document is subject to legal disclaimers.

© NXP B.V. 2017. All rights reserved.

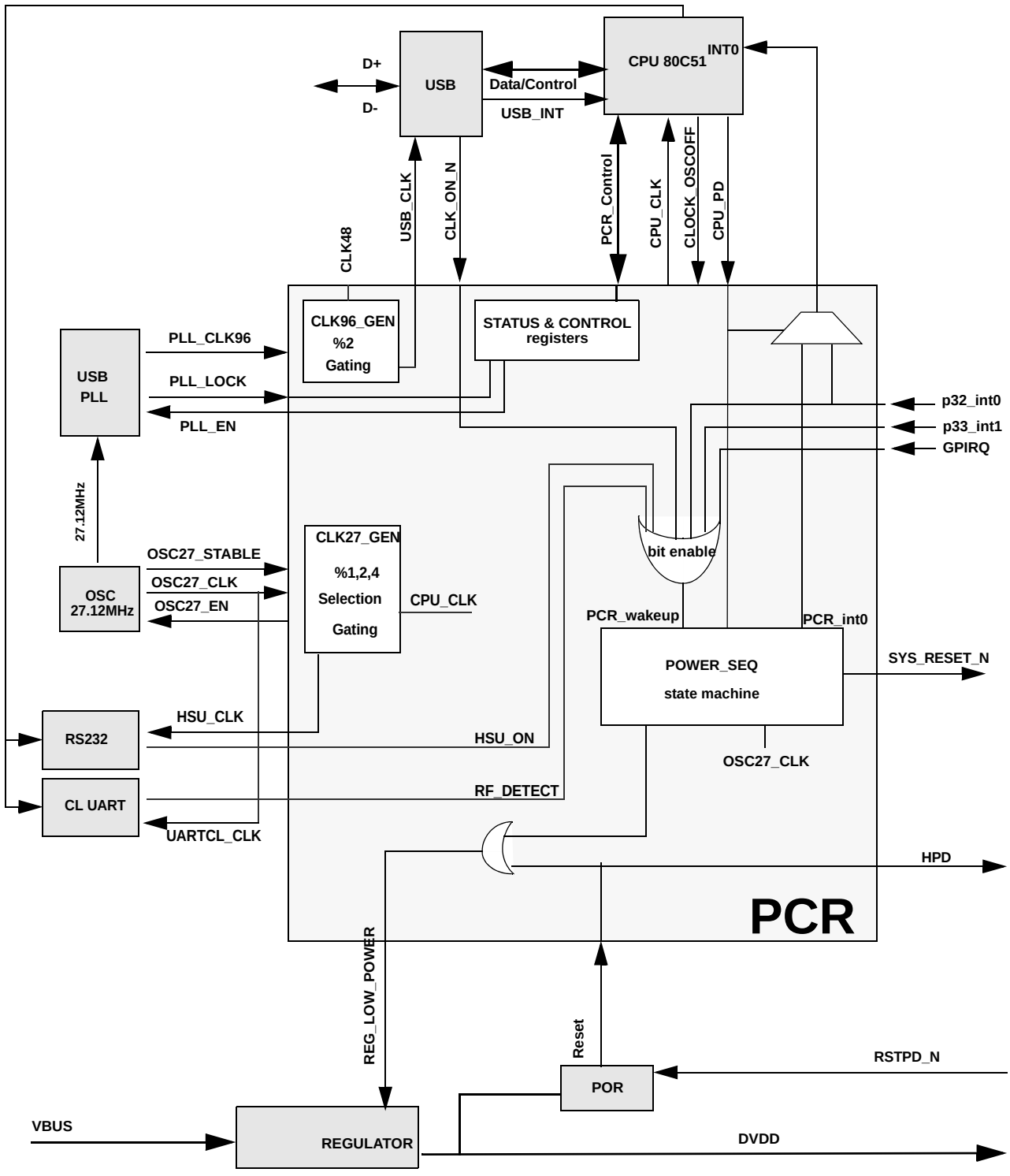

Fig 34. PN533 Power Management block diagram

All information provided in this document is subject to legal disclaimers.

© NXP B.V. 2017. All rights reserved.

8.5.2 27.12 MHz crystal oscillator

The 27.12 MHz clock applied to the PN533 is the time reference for the embedded microcontroller. Therefore stability of the clock frequency is an important factor for reliable operation. It is recommended to adopt the circuit shown in Figure 35.

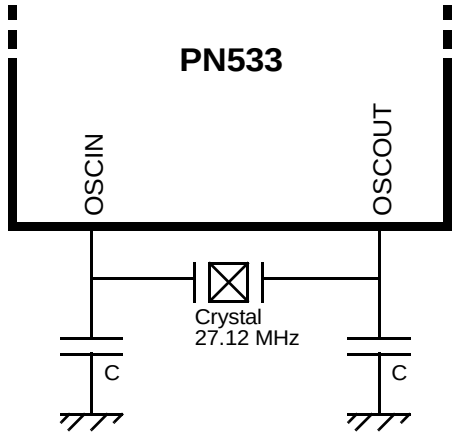

Fig 35. 27.12 MHz crystal oscillator connection

8.5.3 PLL for USB clock generation

The 96MHz used by the USB peripheral is derived from the main 27.12MHz by mean of a semi-fractional PLL. This PLL consists of a ring oscillator running at 96MHZ, an on-chip 70KHz loop filter a divide-by-13 reference divider and a divide-by-46 feedback divider.

The PLL is controlled through several registers (see Table 140 “PCR Control register (address 6203h) bit allocation”).

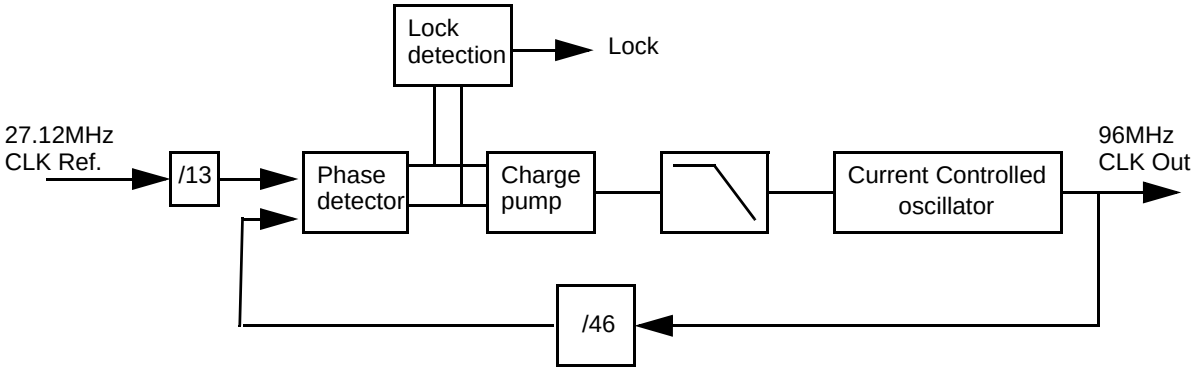

Fig 36. USB PLL

All information provided in this document is subject to legal disclaimers.

© NXP B.V. 2017. All rights reserved.

8.5.4 Power-up sequence

In a USB application, the embedded firmware shall start the USB PLL. The embedded firmware shall follow below sequence:

- Configure MATX in USB mode.
- Enable 96MHz PLL by setting PLL_en bit of PCR control register (6203h) to logic level 1.
- Wait for the lock of the PLL by polling PLL_lock bit in PCR CER register (6201h).
- When PLL is locked, enable 96 MHz clock by setting CLK_96_en bit of the PCR control register at logic level one.
- Enable 48 MHz USB clock that is derived from 96MHz clock by setting USB_enable bit of PCR CER register (6201h) at logic level one.
- Set reset_USB_n bit of PCR control register (6203h) at logic level one.

8.5.5 Low power modes

There are 3 different low power modes.

- Hard-Power-down mode (HPD): controlled by the pin RSTPD_N. The PN533 goes into reset and power consumption is at a minimum, see Section 8.5.6 “Reset modes”.
- In HSU application, Soft-Power-down mode (SPD): controlled by firmware. See Section 8.5.7 “Soft-Power-down mode (SPD)” to optimize the power consumption in this mode.
- In USB application, Suspend mode: controlled by firmware. xxxx

Table 132. Current consumption in low power modes

Mode	Conditions	Maximum current consumption
Hard-Power-down	RSTPD_N is set to logic level 0	10 μA
Soft-Power-down with no RF detector	Sequence of Section 8.5.7 is applied	<tbd>
Soft-Power-down with RF detector active	Sequence of Section 8.5.7 is applied	30 μA
Suspend mode remote wake up disabled	<tbd>	<tbd>
Suspend mode with remote wake up enabled	<tbd>	<tbd>

All information provided in this document is subject to legal disclaimers.

© NXP B.V. 2017. All rights reserved.

8.5.6 Reset modes

The possible reset mechanisms are listed below:

- Supply rail variation

  When DVDD falls below Vth, the POR (Power-On-Reset) asserts an internal reset signal. The Power Sequencer disables all clocks. When DVDD rises above Vth+Vhys, the POR deasserts the internal reset signal and the Power Sequencer starts the power-up sequence. Once the PN533 is out of reset, the RSTOUT_N pin is driven high.

- Glitch on DVDD

  When DVDD falls below Vth for more than 1 μs, the POR asserts an internal reset signal. The power sequencer starts the Power-down sequence. The PN533 goes into reset and the RSTOUT_N signal is driven low.

- Hard Power-down mode (HPD)

  When RSTPD_N is set to logic level 0, the PN533 goes into Hard Power Down (HDP) mode. The PN533 goes into reset and the RSTOUT_N signal is driven low. The power consumption is at the minimum. DVDD is tied to ground and ports are disconnected from their supply rails. The PN533 goes into reset.

8.5.7 Soft-Power-down mode (SPD)

In order to initiate the Soft-Power-down mode with minimal power consumption, the firmware should:

- Configure I/Os to minimize power consumption
- Shut down unused functions
  - Contactless Interface Unit with bit Power-down of SFR register D1h, see Table 180 on page 156.
  - Disable the SVDD switch, see Table 130 on page 94
  - Power down the RF level detector if RF wake up is not enabled, see Table 288 on page 198.
- Enable relevant wake-up sources
- Disable unwanted interrupts
- Set to logic level one the CPU_PD bit in PCON register, see Table 7 on page 15

All information provided in this document is subject to legal disclaimers.

© NXP B.V. 2017. All rights reserved.

8.5.8 Suspend mode

After 3 ms of no USB activity on the bus, the device goes in suspend. About 2 ms later the device will indicate that it no longer needs the clock by setting to logic level one suspended bit (refer to bit “suspended” of “get device status” USB register at FEh address).

In order to initiate the Suspend mode with minimal power consumption, the firmware should:

- Poll the clock_on bit in the CER register at 6201h address
- Configure I/Os to minimize power consumption
- Shut down unused functions
  - Contactless Interface Unit with bit Power-down of SFR register D1h, see Table 180 on page 156.
  - Disable the SVDD switch, see Table 130 on page 94
  - Power down the RF level detector if RF wake up is not enabled, see Table 288 on page 198.
- Enable relevant wake-up sources; USB wake up source is mandatory
- Disable unwanted interrupts
- Disable CLK_96 MHz Clock, by setting to logic level zero CLK_96_en bit of the PCR control register at 6203h address
- Disable USB PLL by setting to logic level zero PLL_en bit in PCR control register
- Set logic level one the CPU_PD bit in PCON register, see Table 7 on page 15

All information provided in this document is subject to legal disclaimers.

© NXP B.V. 2017. All rights reserved.

8.5.9 Remote wake-up

The PN533 can be woken up from a Soft-Power-down mode or Suspend mode when an event occurs on one of the wake up sources, which has been enabled. There are seven wake-up sources:

- P32_INT0
- P33_INT1
- RF field detected
- HSU wake-up (valid when in Soft-Power-down mode)
- USB wake-up (valid when in Suspend mode)
- NFC_WI counters
- GPIRQ: P34, P35, DP

When one of these signals is asserted, if its corresponding enable bit is set (see Table 145 on page 107), the Power Sequencer starts the wake-up sequence. The wake up event can only be serviced if the Power Sequencer is in the Stopped state, which means the PN533 is fully entered in Soft-Power-down mode.

Figure 37 illustrates the wake-up mechanism, using an event on P33_INT1 as an example. CPU_CLK is active T1 after the falling edge of P33_INT1 and the PN533 is ready. T1 depends on the choice of crystal oscillator and its layout. For devices such as TAS-3225A, TAS-7 or KSS2F, T1 is a maximum of 2 ms. Exit from the Power-down mode is signaled by CPU_PD going low one clock cycle later.

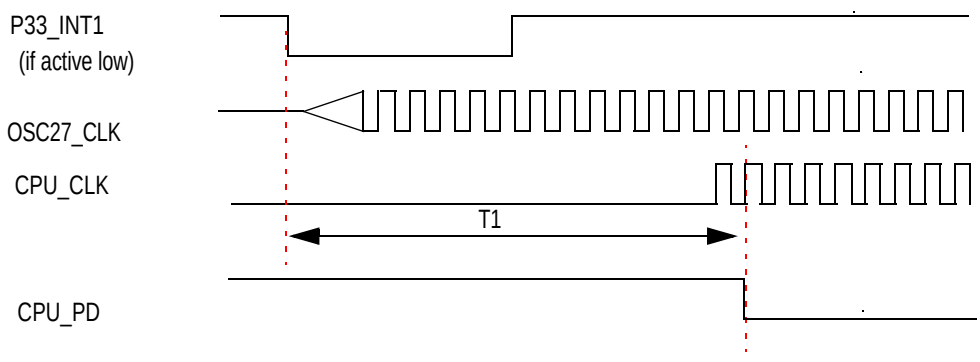

Fig 37. Remote wake-up from Power-down with P33 as wake-up source

When woken up, two cases are to be considered: non USB application and USB application

- In a non USB application, system is ready to operate
- In a USB application, the embedded firmware shall start the USB PLL. It shall then poll the PLL_lock signal to enable the 96 MHz clocks. When the 96 MHz clock is enabled, the 48 MHz clock is available.

All information provided in this document is subject to legal disclaimers.

© NXP B.V. 2017. All rights reserved.

8.5.10 PCR extension registers

The PCR is controlled via several registers given in Table 133:

Table 133. PCR registers

Name	Size [bytes]	Address offset	Description	Reset	R/W
CFR	1	6200h	Clock Frequency Register	02	R/W
CER	1	6201h	Clock Enable Register	0E	R/W
ILR	1	6202h	Interrupt Level Register	40	R/W
Control	1	6203h	Control	C0	R/W
Status	1	6204h	Status	00	R
Wakeupen	1	6205h	Wake-up Enable	00	R/W

8.5.11 PCR register description

8.5.11.1 CFR register

The Clock Frequency Register is used to select the frequency of the CPU and its associated peripherals. The clock frequency can be changed dynamically by writing to this register at any time.

Table 134. PCR CFR register- (address 6200h) bit allocation

Bit	7	6	5	4	3	2	1	0
Symbol	-	-	-	-	-	-	cpu_freq[1:0]	
Reset	0	0	0	0	0	0	1	0
Access	R	R	R	R	R	R	R/W	R/W

Table 135. Description of PCR CFR bits

Bit	Symbol	Description	
7 to 2	-	Reserved	
1 to 0	cpu_frq[1:0]	Select CPU clock frequency.	
		cpu_frq[1:0]	**CPU clock frequency**
		00	27.12 MHz
		01	13.56 MHz
		10	6.78 MHz
		11	27.12 MHz

All information provided in this document is subject to legal disclaimers.

© NXP B.V. 2017. All rights reserved.

8.5.11.2 CER register

The Clock Enable Register is used to enable or disable the clock of the USB and HSU interfaces (frequency is fixed at 27.12 MHz). The clock can be switched on or off at any time.

This register also contains the PLL_lock signal that the embedded firmware should poll.

Table 136. PCR CER register (address 6201h) bit allocation

Bit	7	6	5	4	3	2	1	0
Symbol	-	-	clock_on	PLL_lock	hsu_enable	-	-	usb_enable
Reset	0	0	1	0	1	1	1	0
Access	R	R	R	R	R/W	R	R	R/W

Table 137. Description of PCR CER bits

Bit	Symbol	Description
7 to 6	-	Reserved.
5	clock_on	**USB clock_on signal** to poll before entering PN533 into power down.
4	PLL_lock	**PLL_lock signal**.
3	hsu_enable	**Enable HSU clock.** When 1, HSU is enabled. When 0, HSU is disabled.
2 to 1	-	Reserved.
0	usb_enable	**Enable USB clock**.

All information provided in this document is subject to legal disclaimers.

© NXP B.V. 2017. All rights reserved.

8.5.11.3 ILR register

The Interrupt Level Register is used to program the level of the external interrupts. Firmware can write to this register at any time.

Table 138. PCR ILR register (address 6202h) bit allocation

Bit	7	6	5	4	3	2	1	0
Symbol	-	porpulse_ latched	-	enable_pdselif	-	gpirq_level	int1_level	int0_level
Reset	0	1	0	0	0	0	0	0
Access	R	R/W	R	R/W	R	R/W	R/W	R/W

Table 139. Description of PCR ILR bits

Bit	Symbol	Description
7	-	Reserved
6	porpulse_latched	**Indicates that a reset has been generated.** When set to logic level 1, indicates that the system has been reset. The firmware can write a “0” during the firmware reset sequence.
5	-	Reserved
4	enable_pdselif	**Indicates that a reset has been generated.** When set to logic level 1, P33_INT1 directly controls state of host interface pins: • If P33_INT1 is set to logic level 1, host interface output pins are driven according to selected interface protocol • If P33_INT1 is set to logic level 0, host interface output pins are set into high-impedance state When set to logic level 0, P33_INT1 does not control host interface pins. Their state is determined by selected interface protocol. **enable_pdselif** / **P33_INT1** / **State of host interface pins** 0 / x / Active 1 / 0 / High Impedance 1 / 1 / Active
3	-	Reserved.
2	gpirq_level	**Selects gpirq interrupt level.** When set to logic level 1, wake-up condition is true when gpirq is high. When set to logic level 0, wake-up condition is true when gpirq is low.
1	int1_level	**Selects P33_INT1 interrupt level.** When set to logic level 1, wake-up condition is true when P33_INT1 is low. When set to logic level 0, wake-up condition is true when P33_INT1 is high.
0	int0_level	**Selects P32_INT0 interrupt level.** When set to logic level 1, wake-up condition is true when P32_INT0 is high. When set to logic level 0, wake-up condition is true when P32_INT0 is low.

All information provided in this document is subject to legal disclaimers.

© NXP B.V. 2017. All rights reserved.

8.5.11.4 PCR Control register

The Control register is used to perform a firmware reset and clear wake-up conditions in the Status register.

Table 140. PCR Control register (address 6203h) bit allocation

Bit	7	6	5	4	3	2	1	0
Symbol	-	-	reset_USB_n	clock96_on	PLL_en	-	clear_wakeup_cond	soft_reset
Reset	1	1	0	0	0	0	0	0
Access	R	R	R/W	R/W	R/W	R	R/W	R/W

Table 141. Description of PCR Control bits

Bit	Symbol	Description
7 to 6	-	Reserved.
5	reset_USB_n	**Enables a USB reset.** When set to logic level 1, the reset for the USB block is inactive. When set to logic level 0, reset for the USB block is active
4	CLK96_on	**Enables 96 MHz clock generation.** When set to logic level 1, 96 MHz clocks are enabled. When set to logic level 0, 96 MHz clocks are disabled.
3	PLL_en	**Enables the PLL.** When set to logic level 1, PLL is enabled. When set to logic level 0, PLL is disabled.
1	clear_wakeup_cond	**Clears value of wakeupcond in Status register.** When set to logic level 1, wake-up conditions stored in PCR Status register are set to logic level 0. Bit is set to logic 0 automatically by hardware.
0	soft_reset	**Initiates a firmware reset.** When set to logic level 1, system goes into firmware reset mode. Bit is set to logic level 0 automatically by hardware after performing firmware reset sequence.

All information provided in this document is subject to legal disclaimers.

© NXP B.V. 2017. All rights reserved.

8.5.11.5 PCR Status register

The PCR Status register stores the state of the 7 wake-up events, reported within 6 flags.

Table 142. PCR Status register (address 6204h) bit allocation

Bit	7	6	5	4	3	2	1	0
Symbol	-	gpirq_wu	-	HSU_wu	CIU_wu	USB_wu	int1_wu	int0_wu
Reset	0	0	0	0	0	0	0	0
Access	R	R	R	R	R	R	R	R

An event on a given wake-up condition is flagged by a logic level 1 in the associate bit field.

Table 143. Description of PCR Status bits

Bit	Symbol	Description
7	-	Reserved.
6	gpirq_wu	**gpirq wake-up event (or function of P34, P35 and DP signals when enabled and level-controlled).** Set to logic level 1, when PN533 woke up from a GIRQ event (GPIRQ at logic level 0)[1].
5	-	Reserved.
4	HSU_wu	**HSU wake-up event (hsu_on signal).** Set to logic 1, when PN533 woke up from a HSU event (5 rising edges on HSU_RX) [1].
3	CIU_wu	**Contactless wake-up event (RF detected signal or NFC-WI event).** Set to logic 1, when PN533 woke up from a Contactless interrupt [1].
2	USB_wu	**USB wake-up event.** Set to logic 1, when the system woke up from a USB interrupt. [1]
1	int1_wu	**P33_INT1 wake-up event.** Set to logic 1, when the system woke up from a P33_INT1 interrupt [1].
0	int0_wu	**P32_INT0 wake-up event.** Set to logic 1, when the system woke up from a P32_INT0 interrupt.[1].

[1] The firmware must set to logic level 0 this bit after reading it (by writing a logic 1 to bit clear_wakeup_cond in register PCR Control).

All information provided in this document is subject to legal disclaimers.

© NXP B.V. 2017. All rights reserved.

8.5.11.6 Wakeupen register

Register Wakeupen allows the selection of different wake-up events.

Table 144. PCR Wakeupen register (address 6205h) bit allocation

Bit	7	6	5	4	3	2	1	0
Symbol	-	GPIRQ_wu_en	-	HSU_on_en	CIU_wu_en	clock_on_en	int1_en	int0_en
Reset	0	0	0	0	0	0	0	0
Access	R/W	R/W	R/W	R/W	R/W	R	R/W	R/W

Table 145. Description of PCR Wakeupen bits

Bit	Symbol	Description
7	-	Reserved.
6	GPIRQ_wu_en	**General Purpose IRQ wake-up source enable.** When set to logic 1, a GPIRQ event can wake up PN533.
5	-	Reserved.
4	HSU_on_en	**HSU wake-up source enable.** When set to logic 1, an HSU event can wake up PN533.
3	CIU_wu_en	**Contactless Interface Unit wake-up source enable.** When set to logic 1, a CIU event (RF detected or NFC-WI event) can wake up PN533.
2	clock_on_en	**USB wake up source enable.**
1	int1_en	**P33_INT1 wake-up source enable.** When set to logic 1, a P33_INT1 event can wake up PN533.
0	int0_en	**P32_INT0 wake-up source enable.** When set to logic 1, a P32_INT0 event can wake up PN533.

All information provided in this document is subject to legal disclaimers.

© NXP B.V. 2017. All rights reserved.

8.6 Contactless Interface Unit (CIU)

The PN533 CIU is a modem for contactless communication at 13.56 MHz. It supports 6 different operating modes

- ISO/IEC 14443A/MIFARE Reader/Writer
- FeliCa Reader/Writer
- ISO/IEC 14443B Reader/Writer
- ISO/IEC 14443A/MIFARE KB or MIFARE 4 KB Card emulation
- FeliCa Card emulation
- ISO/IEC 18092, ECMA 340 NFCIP-1 Peer-to-Peer

The CIU implements a demodulator and decoder for signals from ISO/IEC 14443A/MIFARE compatible cards and transponders. The CIU handles the complete ISO/IEC 14443A framing and error detection (Parity & CRC).

The CIU supports MIFARE 1 KB or MIFARE 4 KB emulation products. The CIU supports contactless communication using MIFARE Higher transfer speeds up to 424 kbit/s in both directions.

The CIU can demodulate and decode FeliCa coded signals. The CIU digital part handles the FeliCa framing and error detection. The CIU supports contactless communication using FeliCa Higher transfer speeds up to 424 kbit/s in both directions.

The CIU supports layers 2 and 3 of the ISO/IEC 1444 B Reader/Writer communication scheme, except anticollision which must be implemented in firmware as well as upper layers.

In card emulation mode, the CIU is able to answer to a Reader/Writer command either according to the FeliCa or ISO/IEC 14443A/MIFARE card interface scheme. The CIU generates the load modulation signals, either from its transmitter or from the LOADMOD pin driving an external active circuit. A complete secure card functionality is only possible in combination with a secure IC using the NFC-WI/S^2C interface.

Compliant to ECMA 340 and ISO/IEC 18092 NFCIP-1 Passive and Active communication modes, the CIU offers the possibility to communicate to another NFCIP-1 compliant device, at transfer speeds up to 424 kbit/s.The CIU handles the complete NFCIP-1 framing and error detection.

The CIU transceiver can be connected to an external antenna for Reader/Writer or Card/PICC modes, without any additional active component.

All information provided in this document is subject to legal disclaimers.

© NXP B.V. 2017. All rights reserved.

8.6.1 Feature list

- Frequently accessed registers placed in SFR space
- Highly integrated analog circuitry to demodulate and decode received data
- Buffered transmitter drivers to minimize external components to connect an antenna.
- Integrated RF level detector
- Integrated data mode detector
- Typical operating distance of 50 mm in ISO/IEC 14443A/MIFARE or FeliCa in Reader/Writer mode depending on the antenna size, tuning and power supply
- Typical operating distance of 50 mm in NFCIP-1 mode depending on the antenna size, tuning and power supply
- Typical operating distance in ISO/IEC 14443A/MIFARE card or FeliCa card operation mode of about 100 mm depending on the antenna size, tuning and the external field strength
- Supports MIFARE 1 KB or MIFARE 4 KB emulation encryption in Reader/Writer mode
- Supports MIFARE higher data rate at 212 kbit/s and 424 kbit/s
- Supports contactless communication according to the FeliCa scheme at 212 kbit/s and 424 kbit/s
- Support of the NFC-WI/S^2C interface
- 64 bytes send and receive FIFO-buffer
- Programmable timer
- CRC Co-processor
- Internal self test
- 2 interrupt sources
- Adjustable parameters to optimize the transceiver performance according to the antenna characteristics

All information provided in this document is subject to legal disclaimers.

© NXP B.V. 2017. All rights reserved.

8.6.2 Simplified block diagram

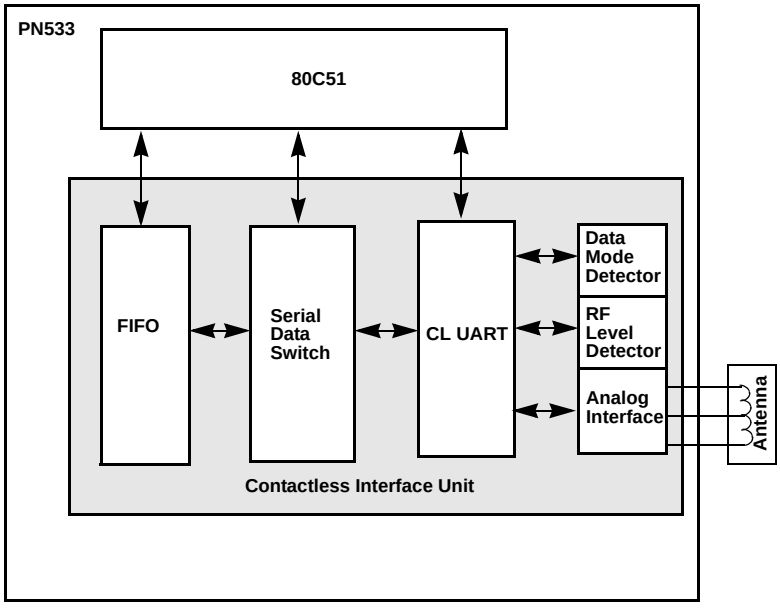

Fig 38. Simplify Contactless Interface Unit (CIU) block diagram

The Analog Interface handles the modulation and demodulation of the analog signals according to the Card emulation mode, Reader/Writer mode and NFCIP-1 mode communication scheme.

The RF level detector detects the presence of an external RF-field delivered by the antenna to the RX pin.

The data mode detector detects a ISO/IEC 14443-A MIFARE, FeliCa or NFCIP-1 mode in order to prepare the internal receiver to demodulate signals, which are sent to the PN533.

The NFC-WI/S^{2}C interface supports communication to secure IC. It also supports digital signals for transfer speeds above 424 kbit/s.

The CL UART handles the protocol requirements for the communication schemes in co-operation with the appropriate firmware. The FIFO buffer allows a convenient data transfer from the 80C51 to the CIU and vice versa.

All information provided in this document is subject to legal disclaimers.

© NXP B.V. 2017. All rights reserved.

8.6.3 Reader/Writer modes

All indicated modulation indices and modes in this chapter are system parameters. This means that beside the IC settings a suitable antenna tuning is required to achieve the optimal performance.

8.6.3.1 ISO/IEC 14443A Reader/Writer

The following diagram describes the communication on a physical level, the communication overview in the Table 146 describes the physical parameters.

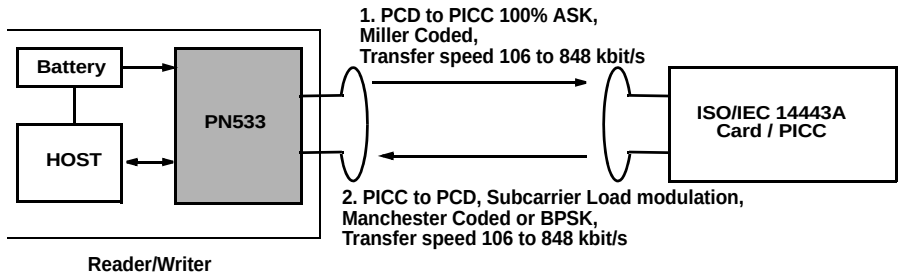

Fig 39. ISO/IEC 14443A/MIFARE Reader/Writer communication diagram

Table 146. Communication overview for ISO/IEC 14443A/MIFARE Reader/Writer

Communication scheme		ISO/IEC 14443A MIFARE	MIFARE higher baud rate		
Baud rate		**106 kbit/s**	**212 kbit/s**	**424 kbit/s**	**848 kbit/s**
Bit length		$\frac{128}{13{,}56MHz} \approx 9,44\mu s$	$\frac{64}{13{,}56MHz} \approx 4{,}72\mu s$	$\frac{32}{13{,}56MHz} \approx 2,36\mu s$	$\frac{16}{13{,}56MHz} \approx 1,18\mu s$
PN533 to PICC/Card	Modulation	100% ASK	>25% ASK	>25% ASK	>25% ASK
	Bit coding	Modified Miller coding	Modified Miller coding	Modified Miller coding	Modified Miller coding
PICC/Card to PN533	Modulation	Subcarrier load modulation	Subcarrier load modulation	Subcarrier load modulation	Subcarrier load modulation
	Subcarrier frequency	13.56 MHz/16	13.56 MHz/16	13.56 MHz/16	13.56 MHz/16
	Bit coding	Manchester coding	BPSK	BPSK	BPSK

The internal CRC co-processor calculates the CRC value according the data coding and framing defined in the ISO/IEC 14443A part 3, and handles parity generation internally according to the transfer speed.

With appropriate firmware, the PN533 can handle the complete ISO/IEC 14443A/MIFARE protocol.

All information provided in this document is subject to legal disclaimers.

© NXP B.V. 2017. All rights reserved.

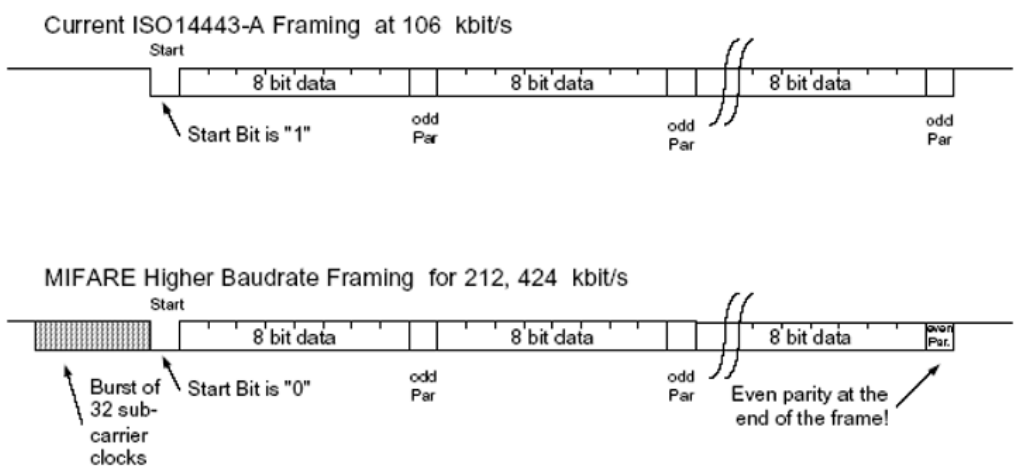

Fig 40. Data coding and framing according to ISO/IEC 14443A

All information provided in this document is subject to legal disclaimers.

© NXP B.V. 2017. All rights reserved.

8.6.3.2 FeliCa Reader/Writer

The following diagram describes the communication at the physical level. Table 147 describes the physical parameters.

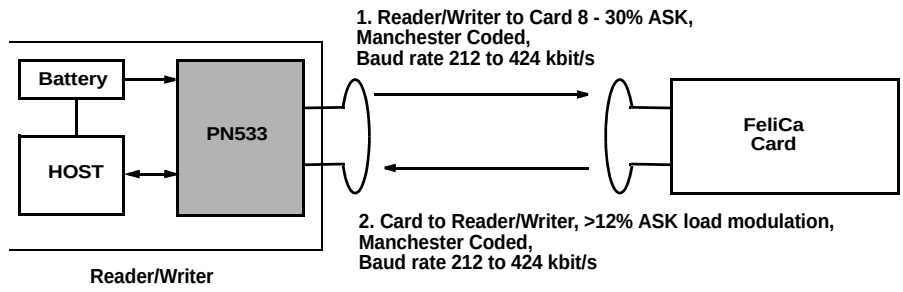

Fig 41. FeliCa Reader/Writer communication diagram

Table 147. Communication overview for FeliCa Reader/Writer

Communication scheme		**FeliCa**	**FeliCa higher baud rate**
Baud rate		**212 kbit/s**	**424 kbit/s**
Bit length		$\frac{64}{13{,}56MHz} \approx 4{,}72\mu s$	$\frac{32}{13{,}56MHz} \approx 2{,}36\mu s$
PN533 to PICC/Card	Modulation	8 - 30% ASK	8 - 30% ASK
	Bit coding	Manchester coding	Manchester coding
PICC/Card to PN533	Modulation	>12% ASK	>12% ASK
	Bit coding	Manchester coding	Manchester coding

With appropriate firmware, the PN533 can handle the FeliCa protocol.

The FeliCa Framing and coding must comply with the following table:

Table 148. FeliCa Framing and Coding

Preamble						SYNC		LEN	n-Data				CRC	
00h	00h	00h	00h	00h	00h	B2h	4Dh							

To enable the FeliCa communication a 6-byte preamble (00h, 00h, 00h, 00h, 00h, 00h) and 2-byte SYNC bytes (B2h, 4Dh) are sent to synchronize the receiver.

The following LEN byte indicates the length of the sent data bytes plus the LEN byte itself. The CRC calculation is done according to the FeliCa definitions with the MSB first.

To transmit data on the RF interface, the 80C51 has to send the LEN and data bytes to the CIU. The Preamble and SYNC bytes are generated by the CIU automatically and must not be written to the FIFO. The CIU performs internally the CRC calculation and adds the result to the frame.

The starting value for the CRC Polynomial is 2 null bytes: (00h), (00h)

Example of frame:

Table 149. FeliCa framing and coding

Preamble						SYNC		LEN	2 Data Bytes		CRC	
00	00	00	00	00	00	B2	4D	03	AB	CD	90	35

All information provided in this document is subject to legal disclaimers.

© NXP B.V. 2017. All rights reserved.

8.6.3.3 ISO/IEC 14443B Reader/Writer

The CIU supports layers 2 and 3 of the ISO/IEC 14443B Reader/Writer communication scheme, except anticollision which must be implemented in firmware as well as upper layers.

The following diagram describes the communication at the physical level. Table 150 describes the physical parameters.

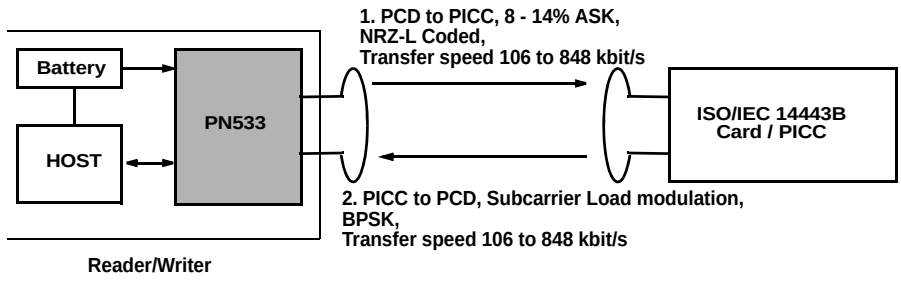

Fig 42. ISO/IEC 14443B Reader/Writer communication diagram

With appropriate firmware, the PN533 can handle the ISO/IEC 14443B protocol.

Table 150. Communication overview for ISO/IEC 14443B Reader/Writer

Communication scheme		**ISO/IEC 14443B**	**Type B higher baud rate**		
Baud rate		**106 kbit/s**	**212 kbit/s**	**424 kbit/s**	**848 kbit/s**
Bit length		$\frac{128}{13{,}56MHz} \approx 9,44\mu s$	$\frac{64}{13{,}56MHz} \approx 4,78\mu s$	$\frac{32}{13{,}56MHz} \approx 2,36\mu s$	$\frac{16}{13{,}56MHz} \approx 1,18\mu s$
PN533 to PICC/Card	Modulation	8 -14% ASK	8 -14% ASK	8 -14% ASK	8 -14% ASK
	Bit coding	NRZ-L	NRZ-L	NRZ-L	NRZ-L
PICC/Card to PN533	Modulation	Subcarrier load modulation	Subcarrier load modulation	Subcarrier load modulation	Subcarrier load modulation
	Subcarrier frequency	13.56 MHz/16	13.56 MHz/16	13.56 MHz/16	13.56 MHz/16
	Bit coding	BPSK	BPSK	BPSK	BPSK

All information provided in this document is subject to legal disclaimers.

© NXP B.V. 2017. All rights reserved.

8.6.4 ISO/IEC 18092, ECMA 340 NFCIP-1 operating mode

A NFCIP-1 communication takes place between 2 devices:

- Initiator: generates RF field at 13.56 MHz and starts the NFCIP-1 communication.
- Target: responds to initiator command either in a load modulation scheme in Passive Communication mode or using a self generated and self modulated RF field for Active Communication mode.

The NFCIP-1 communication differentiates between Active and Passive communication modes.

- Active Communication mode means both the initiator and the target are using their own RF field to transmit data
- Passive Communication mode means that the Target answers to an Initiator command in a load modulation scheme. The Initiator is active in terms of generating the RF field.

In order to fully support the NFCIP-1 standard the PN533 supports the Active and Passive Communications mode at the transfer speeds 106 kbit/s, 212 kbit/s and 424 kbit/s as defined in the NFCIP-1 standard.

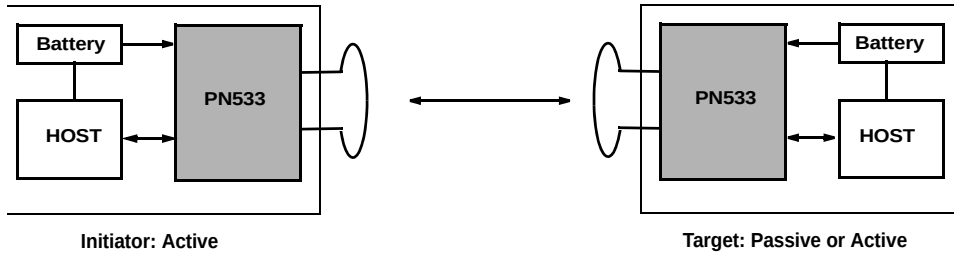

Fig 43. NFCIP-1 mode

With appropriate firmware, the PN533 can handle the NFCIP-1 protocol, for all communication modes and data rates, for both Initiator and Target.

All information provided in this document is subject to legal disclaimers.

© NXP B.V. 2017. All rights reserved.

8.6.4.1 ACTIVE Communication mode

Active Communication Mode means both the Initiator and the Target are using their own RF field to transmit data.

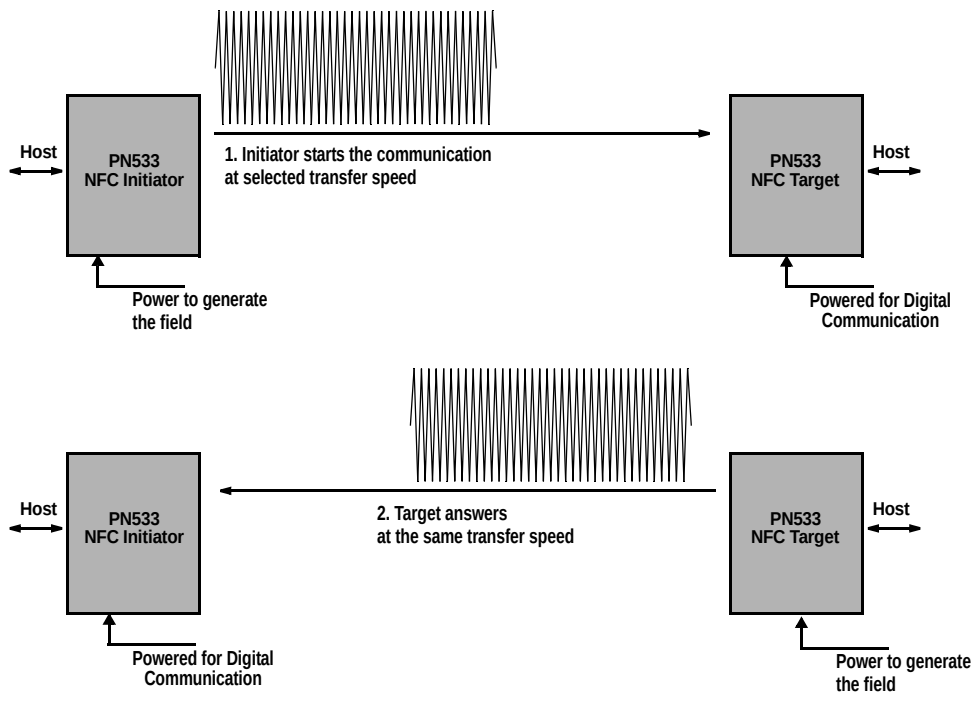

Fig 44. Active NFC mode

The following table gives an overview of the active communication modes:

Table 151. Communication overview for NFC Active Communication mode

Communication scheme		**ISO/IEC 18092, ECMA 340, NFCIP-1**		
Baud rate		**106 kbit/s**	**212 kbit/s**	**424 kbit/s**
Bit length		$\frac{128}{13{,}56MHz} \approx 9{,}44\mu s$	$\frac{64}{13{,}56MHz} \approx 4{,}72\mu s$	$\frac{32}{13{,}56MHz} \approx 2{,}36\mu s$
Initiator to Target	Modulation	100% ASK	8-30%ASK	8-30%ASK
	Bit coding	Miller Coded	Manchester Coded	Manchester Coded
Target to Initiator	Modulation	100% ASK	8-30%ASK	8-30%ASK
	Bit coding	Miller Coded	Manchester Coded	Manchester Coded

All information provided in this document is subject to legal disclaimers.

© NXP B.V. 2017. All rights reserved.

8.6.4.2 PASSIVE Communication mode

Passive Communication Mode means that the target answers to an Initiator command in a load modulation scheme.

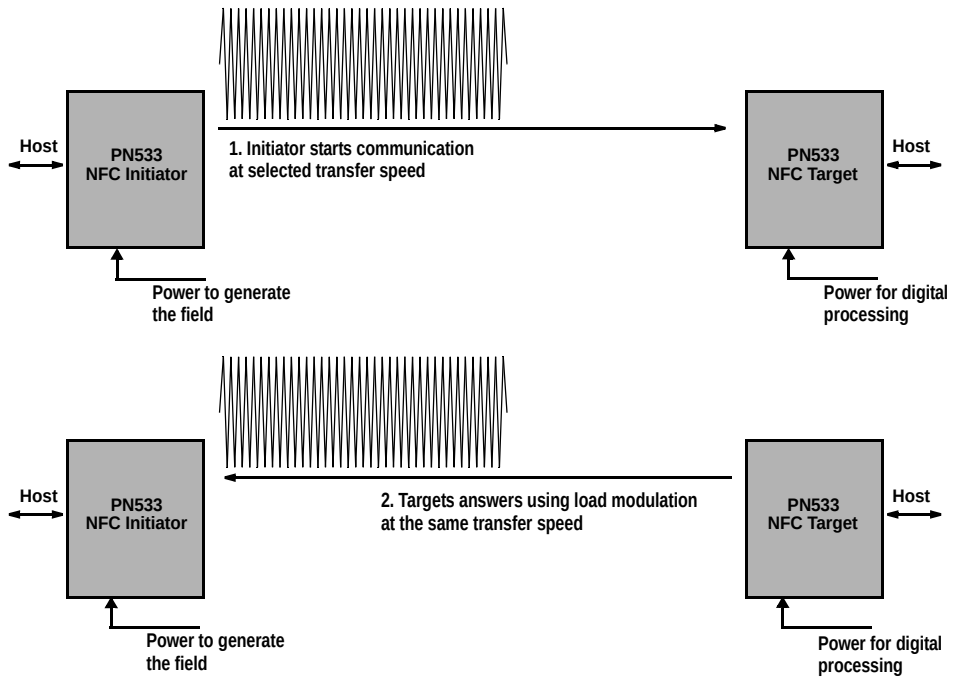

Fig 45. Passive NFC mode

The following table gives an overview of the active communication modes:

Table 152. Communication overview for NFC Passive Communication mode

Communication scheme		**ISO/IEC 18092, ECMA 340, NFCIP-1**		
Baud rate		**106 kbit/s**	**212 kbit/s**	**424 kbit/s**
Bit length		$\frac{128}{13{,}56MHz} \approx 9{,}44\mu s$	$\frac{64}{13{,}56MHz} \approx 4,76\mu s$	$\frac{32}{13{,}56MHz} \approx 2,36\mu s$
PN533 to PICC/Card	Modulation	100% ASK	100% ASK	100% ASK
	Bit coding	Modified Miller coding	Modified Miller coding	Modified Miller coding
PICC/Card to PN533	Modulation	Subcarrier load modulation	>12% ASK	>12% ASK
	Subcarrier frequency	13.56 MHz/16	No subcarrier	No subcarrier
	Bit coding	Manchester coding	Manchester coding	Manchester coding

All information provided in this document is subject to legal disclaimers.

© NXP B.V. 2017. All rights reserved.

8.6.4.3 NFCIP-1 framing and coding

The NFCIP-1 framing and coding in Active and Passive communication modes are defined in the NFCIP-1 standard: ISO/IEC 18092 or ECMA 340.

8.6.4.4 NFCIP-1 protocol support

The NFCIP-1 protocol is not completely described in this document. For detailed explanation of the protocol refer to the ISO/IEC 18092 / ECMA340 NFCIP-1 standard. However the datalink layer is according to the following policy:

- Transaction includes initialization, anticollision methods and data transfer. This sequence must not be interrupted by another transaction.
- Speed should not be changed during a data transfer

In order not to disturb current infrastructure based on 13.56 MHz general rules to start NFC communication are defined in the following way:

- Per default NFCIP-1 device is in target mode, meaning its RF field is switched off.
- The RF level detector is active.
- Only if application requires the NFCIP-1 device shall switch to Initiator mode.
- Initiator shall only switch on its RF field if no external RF field is detected by RF Level detector during a time of TIDT.
- The initiator performs initialization according to the selected mode.

All information provided in this document is subject to legal disclaimers.

© NXP B.V. 2017. All rights reserved.

8.6.5 Card operating modes

The PN533 can be addressed like a FeliCa or ISO/IEC 14443A/MIFARE card. This means that the PN533 can generate an answer in a load modulation scheme according to the ISO/IEC 14443A/MIFARE or FeliCa interface description.

Remark: The PN533 does not support a secure storage of data. This has to be handled by a dedicated secure IC or a host. The secure IC is optional.

Remark: The PN533 can not be powered by the field in this mode and needs a power supply.

8.6.5.1 ISO/IEC 14443A/MIFARE card operating mode

With appropriate firmware, the PN533 can handle the ISO/IEC 14443A including the level 4, and the MIFARE protocols.

The following diagram describes the communication at the physical level. Table 153 describes the physical parameters.

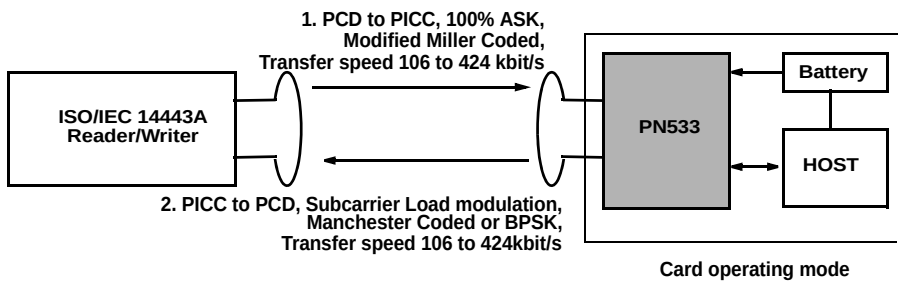

Fig 46. ISO/IEC 14443A/MIFARE card operating mode communication diagram

Table 153. Communication overview for ISO/IEC 14443A/MIFARE Card operating mode

Communication scheme		**ISO/IEC 14443A MIFARE**	**MIFARE higher baud rate**	
Baud rate		**106 kbit/s**	**212 kbit/s**	**424 kbit/s**
		$\frac{128}{13{,}56MHz} \approx 9{,}44\mu s$	$\frac{64}{13{,}56MHz} \approx 4{,}78\mu s$	$\frac{32}{13{,}56MHz} \approx 2{,}36\mu s$
Reader/Writer to PN533	Modulation	100% ASK	100% ASK	100% ASK
	Bit coding	Modified Miller coding	Modified Miller coding	Modified Miller coding

All information provided in this document is subject to legal disclaimers.

© NXP B.V. 2017. All rights reserved.

Table 153. Communication overview for ISO/IEC 14443A/MIFARE Card operating mode

Communication scheme		ISO/IEC 14443A MIFARE	MIFARE higher baud rate	
Baud rate		**106 kbit/s**	**212 kbit/s**	**424 kbit/s**
		$\frac{128}{13{,}56MHz} \approx 9{,}44\mu s$	$\frac{64}{13{,}56MHz} \approx 4,78\mu s$	$\frac{32}{13{,}56MHz} \approx 2,36\mu s$
PN533 to Reader/Writer	Modulation	Subcarrier load modulation	Subcarrier load modulation	Subcarrier load modulation
	Subcarrier frequency	13.56 MHz/16	13.56 MHz/16	13.56 MHz/16
	Bit coding	Manchester coding	BPSK	BPSK

All information provided in this document is subject to legal disclaimers.

© NXP B.V. 2017. All rights reserved.

8.6.5.2 FeliCa Card operating mode

With appropriate firmware, the PN533 can handle the FeliCa protocol.

The following diagram describes the communication at the physical level. Table 154 describes the physical parameters.

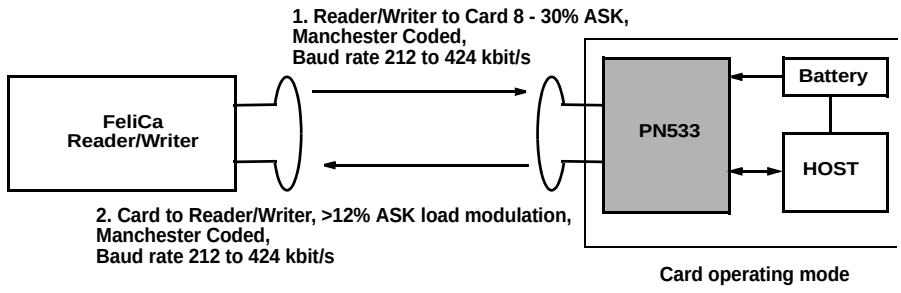

Fig 47. FeliCa card operating mode communication diagram

Table 154. Communication overview for FeliCa Card operating mode

Communication scheme		**FeliCa**	**FeliCa higher baud rate**
Baud rate		**212 kbit/s**	**424 kbit/s**
Bit length		$\frac{64}{13{,}56MHz} \approx 4{,}72\mu s$	$\frac{32}{13{,}56MHz} \approx 2{,}36\mu s$
Reader/Writer to PN533	Modulation	8 - 30% ASK	8 - 30% ASK
	Bit coding	Manchester coding	Manchester coding
PN533 to Reader/Writer	Modulation	>12% ASK	>12% ASK
	Bit coding	Manchester coding	Manchester coding

8.6.6 Overall CIU block diagram

The PN533 supports different contactless communication modes. The CIU supports the internal 80C51 for the different selected communication schemes such as Card Operation mode, Reader/Writer Operating mode or NFCIP-1 mode up to 424 kbit/s. The CIU generates bit- and byte-oriented framing and handles error detection according to these different contactless protocols.

Higher transfer speeds up to 3.39 Mbit/s can be handled by the digital part of the CIU. To modulate and demodulate the data an external circuit has to be connected to the communication interface pins SIGIN/SIGOUT.

Remark: The size and tuning of the antenna have an important impact on the achievable operating distance.

All information provided in this document is subject to legal disclaimers.

© NXP B.V. 2017. All rights reserved.

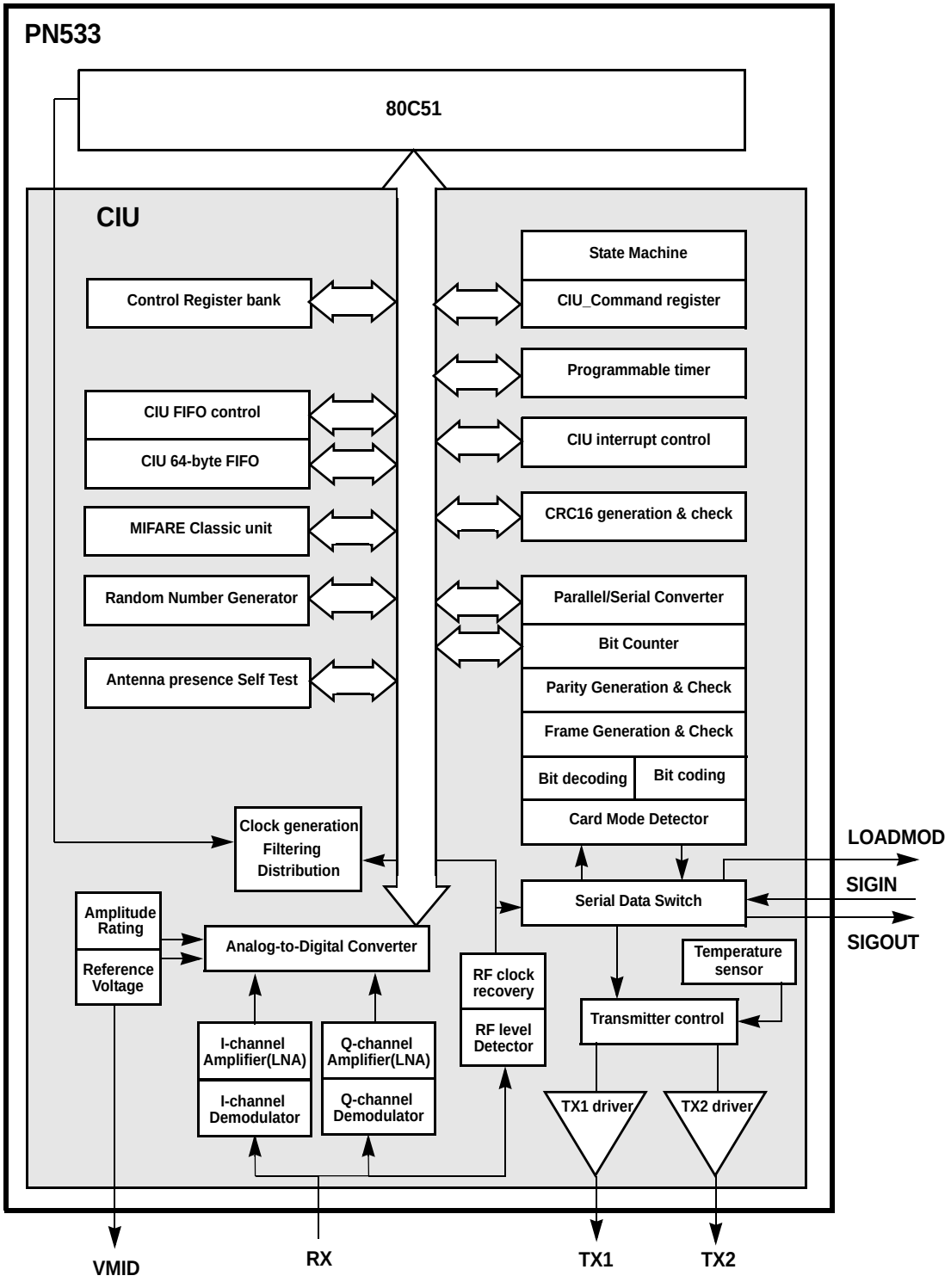

Fig 48. CIU detailed block diagram

All information provided in this document is subject to legal disclaimers.

© NXP B.V. 2017. All rights reserved.

8.6.7 Transmitter control

The signals delivered by the transmitter are on pins TX1 and pin TX2. The supply and grounds of the transmitter drivers are TVDD, TVSS1 and TVSS2.

The signals delivered are the 13.56 MHz energy carrier modulated by an envelope signal. It can be used to drive an antenna directly, using a few passive components for matching and filtering, see Section 13 “Application information” on page 227. The signals on TX1 and TX2 can be configured by the register CIU_TxControl, see Table 213 on page 170.

The modulation index can be set by adjusting the impedance of the drivers. The impedance of the p-driver can be configured by the registers CIU_CWGsP and CIU_ModGsP. The impedance of the n-driver can be configured by the registers CIU_GsNOn and CIU_GsNOFF. Furthermore, the modulation index depends on the antenna design and tuning.

Remark: It is recommended to use a modulation index in the range of 8% for the FeliCa and NFCIP-1 communication scheme at 212 and 424 kbit/s.

The registers CIU_TxMode and CIU_TxAuto control the data rate and framing during the transmission and the setting of the antenna driver to support the different requirements at the different modes and transfer speeds.

In the following tables, these abbreviations are used:

- RF: 13.56 MHz clock derived from 27.12 MHz quartz divided by 2
- RF_n: inverted 13.56 MHz clock
- GsPMos: Conductance of the transmitter PMOS
- GsNMos: Conductance of the transmitter NMOS
- CWGsP: PMOS conductance value for Continuous Wave (see Table 250 on page 187)
- ModGsP: refers to ModGsP[5:0], PMOS conductance value for Modulation (see Table 251 on page 187)
- CWGsNOn: refers to CWGsP[5:0], NMOS conductance value for Continuous Wave (see Table 248 on page 186)
- ModGsNOn: NMOS conductance value for Modulation when generating RF field (see Table 248 on page 186)
- CWGsNOff: NMOS conductance value for Continuous Wave when no RF is generated by the PN533 itself (see Table 240 on page 182)
- ModGsNOff: NMOS conductance value for modulation when load Modulation (see Table 240 on page 182)

Remark: If only 1 driver is switched on, the values for ModGsNOn and CWGsNOn are used for both drivers.

All information provided in this document is subject to legal disclaimers.

© NXP B.V. 2017. All rights reserved.

Table 155. Settings for TX1

TX1 RFEn	Force 100ASK	InvTx1 RFON	InvTx1 RFOFF	Envelope	TX1	GsPMos	GsNMos	Remarks
0	X	X	0	0	0		ModGsNOff	If TX1RFEN is set to logic level 0, the pin TX1 is set to logic 0 or 1 depending on InvTx1RFOFF. The bit Force 100ASK has no effect. Envelope modulates the transconductance value.
				1	0		CWGsNOff	
			1	0	1	ModGsP		
				1	1	CWGsP		
1	0	0	X	0	RF	ModGsP	ModGsNON	If TX1RFEN is set to logic level 1, the RF phase of TX1 is depending on InvTx1RFON. The bit Force100ASK has effect; when Envelope is set to logic level 0, TX1 is pulled to ground.
				1	RF	CWGsP	CWGsNON	
	0	1	X	0	RF_n	ModGsP	ModGsNON	
				1	RF_n	CWGsP	CWGsNON	
	1	0	X	0	0		ModGsNON	
				1	RF	CWGsP	CWGsNON	
	1	1	X	0	0		ModGsNON	
				1	RF_n	CWGsP	CWGsNON	

Table 156. Settings for TX2

TX2 RFEn	Force 100ASK	TX2CW	InVTx2 RFON	InvTx2 RFOFF	Envelope	TX2	GsPMos	GsNMos	Remarks
0	X	0	X	0	0	0		ModGsNOff	If Tx2RFEn is set to logic 0, the pin TX2 is forced to 0 or 1 depending on the InvTx2RFOFF bit. The bit ForceASK100 has no effect. The signal Envelope modulates the transconductance value
					1	0		CWGsNOff	
				1	0	1	ModGsP		
					1	1	CWGsP		
		1	X	0	0	0		CWGsNOff	When Tx2CW bit is set, the transconductance values are always CWGsP or CWGsNOff
					1	0		CWGsNOff	
				1	0	1	CWGsP		
					1	1	CWGsP		

All information provided in this document is subject to legal disclaimers.

© NXP B.V. 2017. All rights reserved.

Table 156. Settings for TX2 *...continued*

TX2 RFEn	Force 100ASK	TX2CW	InVTx2 RFON	InvTx2 RFOFF	Envelope	TX2	GsPMos	GsNMos	Remarks
1	0	0	0	X	0	RF	ModGsP	ModGsNOn	When TX2RFEn is set to logic level 1 and Force100ASK set to logic level 0, the phase of TX2 is depending on InvTx2RFON. If Tx2CW bit is set to logic level 1, the transconductance values are always CWGsP or CWGsNOn, independent of Envelope.
					1	RF	CWGsP	CWGsNOn	
			1	X	0	RF_n	ModGsP	ModGsNOn	
					1	RF_n	CWGsP	CWGsNOn	
		1	0	X	X	RF	CWGsP	CWGsNOn	
			1	X	X	RF_n	CWGsP	CWGsNOn	
	1	0	0	X	0	0		ModGsNOn	If TX2RFEn is set to logic level 1 and TX2CW to logic level 0, the bit Force100ASK has effect; when Envelope is set to logic level 0, TX2 is pulled to ground.
					1	RF	CWGsP	CWGsNOn	
			1	X	0	0		ModGsNOn	
					1	RF_n	CWGsP	CWGsNOn	
		1	0	X	X	RF	CWGsP	CWGsNOn	
			1	X	X	RF_n	CWGsP	CWGsNOn	

All information provided in this document is subject to legal disclaimers.

© NXP B.V. 2017. All rights reserved.

8.6.8 RF level detector

The RF level detector is integrated to fulfill NFCIP-1 protocol requirements (e.g. RF collision avoidance).
Furthermore the RF level detector can be used to wake up the PN533 and to generate an interrupt.

The sensitivity of the RF level detector is adjustable in a 4-bit range using the bits RFLevel in register CIU_RFCfg (see Table 246 on page 185). The sensitivity itself depends on the antenna configuration and tuning.

Possible sensitivity levels at the RX pin are listed below:

Table 157. Setting of the RF level detector

VRx typical [Vpp] CIU Power-down bit set to logic		CIU_RFCfg setting	CIU_RFCfg setting with additional amplifier
2	1.9	1111b	
1.35	1.3	1110b	
0.95	0.9	1101b	
0.6	0.57	1100b	
0.41	0.40	1011b	
0.28	0.27	1010b	
0.17	0.17	1001b	
0.12	0.12	1000b	1xxx1111b
0.085	-	0111b[1]	1xxx1110b
0.055	-	0110b[1]	1xxx1101b
0.040	-	0101b[1]	1xxx1100b
-	-	0100b[1]	1xxx1011b[1]
-	-	0011b[1]	1xxx1010b[1]
-	-	0010b[1]	1xxx1001b[1]
-	-	0001b[1]	1xxx1000b[1]
-	-	0000b[1]	1xxx0111b[1]

[1] Due to noise, it is recommended not to use this setting to avoid misleading results.

To increase the sensitivity of the RF level detector an amplifier can be activated by setting the bit RFLevelAmp in register CIU_RFCfg to logic level 1 (see Table 246 on page 185).

Remark: With typical antenna, lower sensitivity levels without the additional amplifier set (below 1000b) can provoke misleading results because of intrinsic noise in the environment.

Remark: For the same reasons than above, it is recommended to use the RFLevelAmp only with upper RF level settings (above 1001b).

Remark: During the CIU Power-down mode the additional amplifier of the RF level detector is automatically switched off to ensure that the power consumption is minimal.

All information provided in this document is subject to legal disclaimers.

© NXP B.V. 2017. All rights reserved.

8.6.9 Antenna presence self test

The goal of the Antenna Presence Self Test is to facilitate at assembly phase the detection of the absence of the antenna and/or antenna matching components. Such a detection is done by mean of measuring the current consumption.

8.6.9.1 Principle

The principle is explained with typical antenna tuning and matching components.

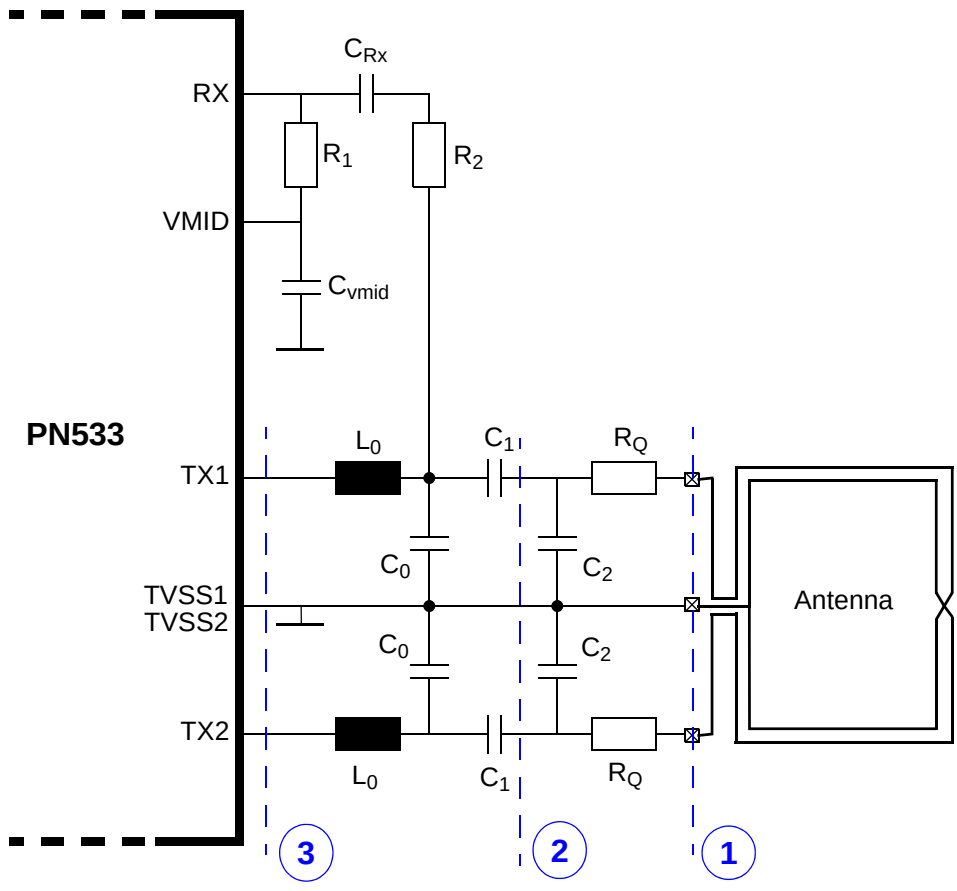

Fig 49. Disconnection localization for the antenna detection

The testing operation can be managed via a dedicated register Table 159 on page 128 and requires the transmitter to be activated. When activated by asserting bit 0, the detector will monitor the current consumption through the internal low dropout voltage regulator. Any violation to the current limits will be reported via bits 7 and 6 of the register.

Several levels of detection can be programmed through the register to offer a large panel of compatibility to different type of antennas. The high current threshold can be programmed from 40 mA to 150 mA with 15 mA steps (total current consumption of the IC). The low current threshold can be programmed from 5mA to 35 mA with 10 mA step (total current consumption of the IC).

There is no dedicated pin for the output of the detector. The result of the detection is to be read out from the antenna test register.

All information provided in this document is subject to legal disclaimers.

© NXP B.V. 2017. All rights reserved.

- Cases 1 and 2: If the antenna and/or the tuning network are not connected, the TVDD current is higher than the nominal one. The antenna detector detects this higher consumption and the andet_up bit in andet_control register is set to high
- Case 3: If the EMC filter is not correctly connected, the current within TVDD is lower than the nominal one. The antenna detector detects this lower consumption and the andet_bot bit in andet_control register is set to high.

To have this functionality working properly it is needed to have the transmitter generating some RF in the antenna.

8.6.9.2 Antenna presence detector register

Table 158. andet_control register (address 610Ch) bit allocation

Bit	7	6	5	4	3	2	1	0
Symbol	andet_bot	andet_up	andet_ithl[1:0]		andet_ithh[2:0]			andet_en
Reset	0	0	0	0	0	0	0	0
Access	R	R	R/W	R/W	R/W	R/W	R/W	R/W

Table 159. Description of andet_control bits

Bit	Symbol	Description
7	andet_bot	A too low power consumption has been detected
6	andet_up	A too high power consumption has been detected
5 to 4	andet_ithl[1:0	Set the low current consumption threshold to be detected
		Define the overcurrent threshold 00: 6 mA 01: 18 mA 10: 29 mA 11: 40 mA
3 to 1	andet_ithh[2:0]	Set the high current consumption threshold to be detected
		000: 38 mA 001: 50 mA 010: 64 mA 011: 76 mA 100: 89 mA 101: 102 mA 110: 115 mA 111: 127 mA
0	andet_en	Enable the detection of the antenna presence detector functionality.

All information provided in this document is subject to legal disclaimers.

© NXP B.V. 2017. All rights reserved.

8.6.10 Random generator

The random generator is used to generate various random number needed for the NFCIP-1 protocol, as well as for MIFARE security.

It can also be used for test purpose, by generating random data through the field.

Table 160. Data_rng register (address 6105h) bit allocation

Bit	7	6	5	4	3	2	1	0
Symbol	data_rng							
Reset	X	X	X	X	X	X	X	X
Access	R/W	R/W	R/W	R/W	R/W	R/W	R/W	R/W

Table 161. Description of Data_rng bits

Bit	Symbol	Description
7 to 0	data_rng	Random number data register.

The Control_switch_rng register can also be used to control the behaviour of the SVDD switch.

Table 162. Control_switch_rng register (address 6106h) bit allocation

Bit	7	6	5	4	3	2	1	0
Symbol	-	hide_svdd_sig	sic_switch_overload	sic_switch_en	-	cpu_need_rng	random_dataready	-
Reset	0	1	0	0	0	0	0	1
Access	R	R/W	R	R/W	R	R/W	R/W	R

Table 163. Description of Control_switch_rng bits

Bit	Symbol	Description
7	-	Reserved.
6	hide_svdd_sig	**Configure the internal state of SIGIN and P34 in an idle state.** This bit can be used to avoid spikes on SIGIN and P34 when the SVDD switch becomes enabled or disabled. When set to logic 0, the internal state of SIGIN and P34 signals are driven by respectively the pads SIGIN and P34. When set to logic 1, the internal state of SIGIN is fixed to 0 and the internal state of P34 is fixed set to logic 1.
5	sic_switch_overload	**State of the current limitation of the SVDD switch.** When set to logic 0, it indicates that the current consumption into the SVDD switch does no exceed the limit. When set to logic 1, the current limitation of the SVDD switch is activated by the switch.
4	sic_switch_en	**Enable of the SVDD switch.** When set to logic 0, the SVDD switch is disabled and the SVDD output power is tied to the ground. When set to logic 1, the SVDD switch is enabled and the SVDD output deliver power to the secure IC and to the internal pads (SIGIN, SIGOUT and P34).
3	-	Reserved

All information provided in this document is subject to legal disclaimers.

© NXP B.V. 2017. All rights reserved.

Table 163. Description of Control_switch_rng bits *...continued*

Bit	Symbol	Description
2	cpu_need_rng	**Force the random number generator in running mode**. When set to logic 0, the random number generator is under control of the CIU. When set to logic 1, the random number generator is forced to run.
1	random_dataready	**Indicates availability of random number.** When set to logic 1, it indicates that a new random number is available. It is automatically set to logic 0 when the register data_rng is read.
0	-	Reserved.

8.6.11 Data mode detector

The data mode detector is able to detect received signals according to the ISO/IEC 14443A/MIFARE, FeliCa or NFCIP-1 schemes and the standard baud rates for 106 kbit/s, 212 kbit/s and 424 kbit/s in order to prepare the internal receiver in a fast and convenient way for further data processing.

The data mode detector can only be activated by the AutoColl command (see Section 8.6.20.12 “AutoColl command” on page 147). The mode detector is reset, when no external RF field is detected by the RF level detector.

The data mode detector could be switched off during the Autocoll command by setting the bit ModeDetOff in the register Mode to logic level 1 (see Table 208 on page 167).

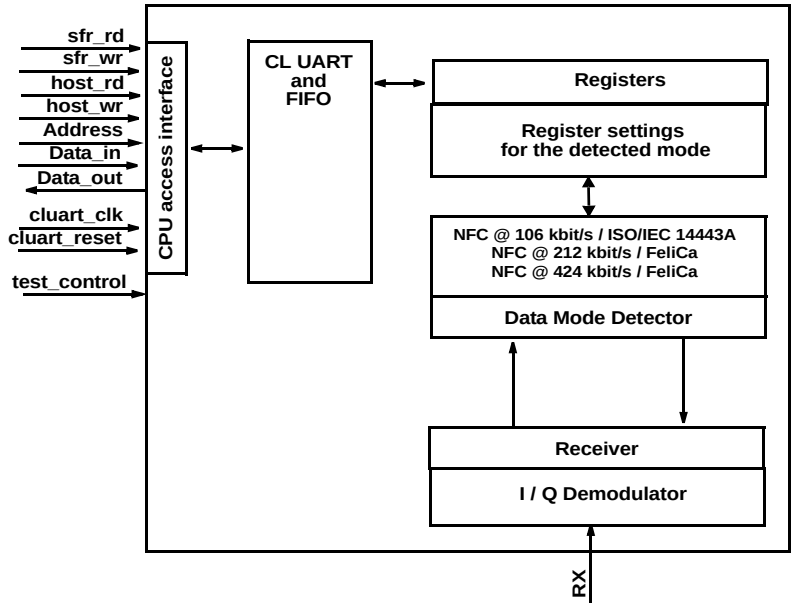

Fig 50. Data mode detector

All information provided in this document is subject to legal disclaimers.

© NXP B.V. 2017. All rights reserved.

8.6.12 Serial data switch

Two main blocks are implemented in the CIU. A digital block comprising state machines, coder and decoder logic and an analog block with the modulator and antenna drivers, receiver and amplifier. The Serial Data Switch is the interface between these two blocks.

The Serial Data Switch can route the interfacing signals to the pins SIGIN and SIGOUT.

SIGOUT and SIGIN are mainly used to enable the NFC-WI/S^{2}C interface in the secure IC to emulate card functionality with the PN533. SIGIN is capable of processing a digital signal on transfer speeds above 424 kbit/s. SIGOUT pin can also provide a digital signal that can be used with an additional external circuit to generate transfer speeds at 106 kbit/s, 212 kbit/s, 424 kbit/s and above.

Load modulation is usually performed internally by the CIU, via TX1 and TX2. However, it is possible to use LOADMOD to drive an external circuitry performing load modulation at the antenna (see optional circuitry of Figure 64 on page 227).

The Serial Data Switch is controlled by the registers CIU_TxSel (see Table 218 on page 172) and CIU_RxSel (see Table 220 on page 173).

8.6.12.1 Serial data switch for driver and loadmod

The following figure shows the serial data switch for pins TX1 and TX2.

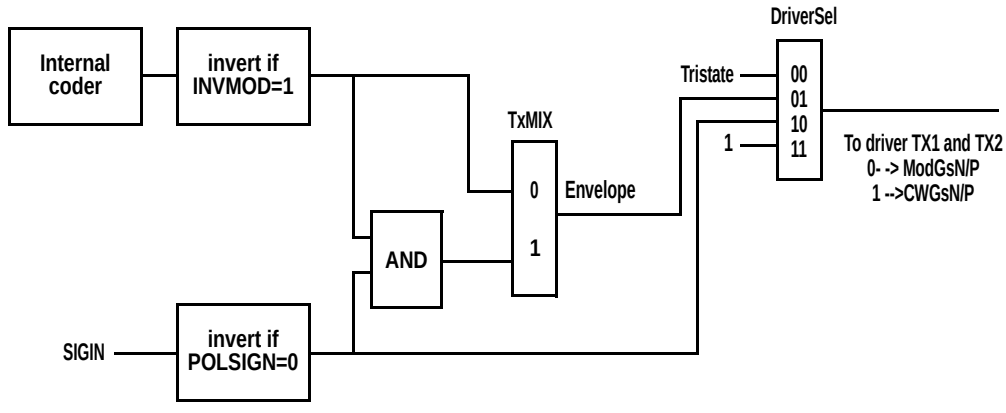

Fig 51. Serial data switch for TX1 and TX2

SIGIN is in general only used for secure IC communication. If TxMix is set to logic 1 (see Table 218 on page 172), the driver pins are simultaneously controlled by SIGIN and the internal coder.

The following figure shows the serial data switch for the LOADMOD pin.

All information provided in this document is subject to legal disclaimers.

© NXP B.V. 2017. All rights reserved.

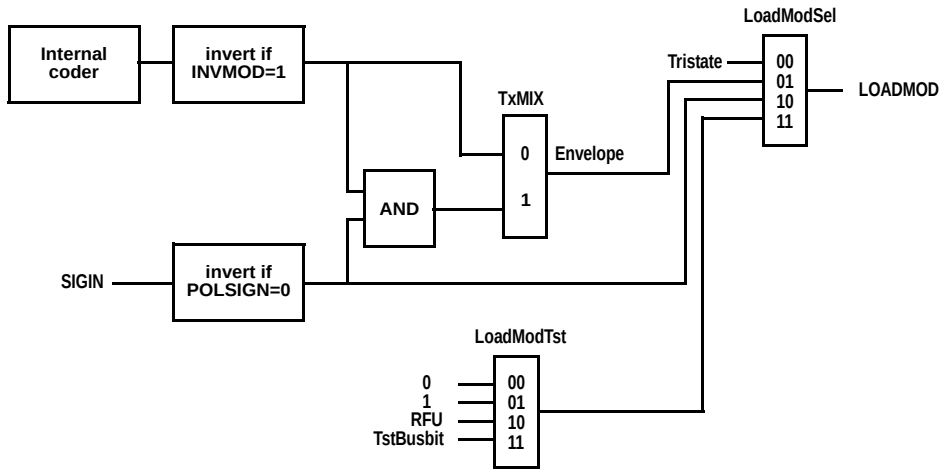

Fig 52. Serial data switch for LOADMOD pin

All information provided in this document is subject to legal disclaimers.

© NXP B.V. 2017. All rights reserved.

8.6.13 NFC-WI/S^{2}C interface support

The NFC-WI/S^{2}C provides the possibility to directly connect a secure IC to the PN533 in order to act as a contactless smart card IC via the PN533. The interfacing signals can be routed to the pins SIGIN and SIGOUT. SIGIN can receive either a digital FeliCa or digital ISO/IEC 14443A signal sent by the secure IC. The SIGOUT pin can provide a digital signal and a clock to communicate to the secure IC. A secure IC can be a smart card IC provided by NXP Semiconductors.

The PN533 generates the supply SVDD to the secure IC. The pins SIGIN and SIGOUT are referred to this supply, as well as pin P34 / SIC_CLK, which can be used as an extra pin for the connection to a secure IC.

The following figure outlines the supported communication flows via the PN533 to the secure core IC.

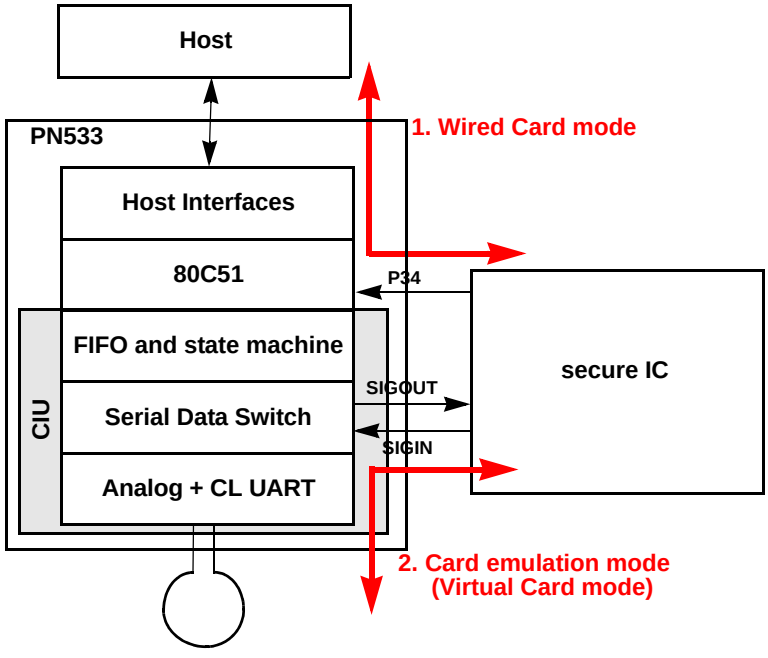

Fig 53. Communication flows supported by the NFC-WI interface

Configured in the Wired Card mode the host controller can directly communicate to the secure IC via SIGIN/SIGOUT. In this mode the PN533 generates the RF clock and performs the communication on the SIGOUT line. To enable the Wired Card mode the clock has to be derived by the internal oscillator of the PN533 (see bits sic_clock_sel in Table 266 on page 191.)

Configured in Card emulation mode the secure IC can act as contactless smart card IC via the PN533. In this mode the signal on the SIGOUT line is provided by the RF field of the external Reader/Writer. To enable the Virtual Card mode the clock derived by the external RF field has to be used.

The configuration of the NFC-WI/S^{2}C interface differs for the FeliCa and MIFARE scheme as outlined in the following chapters.

All information provided in this document is subject to legal disclaimers.

© NXP B.V. 2017. All rights reserved.

8.6.13.1 Signal shape for FeliCa NFC-WI/S^{2}C interface support

The FeliCa secure IC is connected to the PN533 via the pins SIGOUT and SIGIN.

The signal at SIGOUT contains the information of the 13.56 MHz clock and the digitized demodulated signal. The clock and the demodulated signal are combined by using the logical function exclusive OR; XOR.

To ensure that this signal is free of spikes, the demodulated signal is digitally filtered first. The time delay for the digital filtering is in the range of one bit length. The demodulated signal changes only at a positive edge of the clock.

The register CIU_TxSel (see Table 218 on page 172) controls the setting at SIGOUT

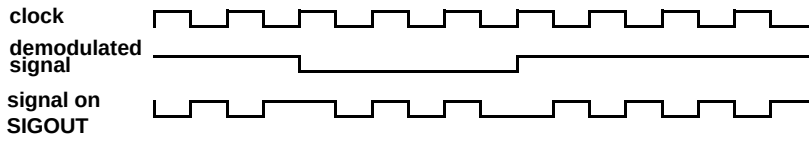

Fig 54. Signal shape for SIGOUT in FeliCa secure IC mode

The response from the FeliCa secure IC is transferred from SIGIN directly to the antenna driver. The modulation is done according to the register setting of the antenna drivers.

The clock is switched to P34 / SIC_CLK (see sic_clk_p34_en bit in Table 178 on page 155).

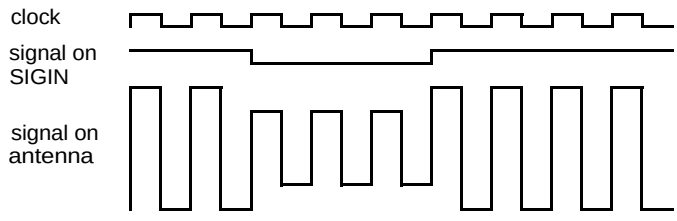

Fig 55. Signal shape for SIGIN in FeliCa secure IC mode

Remark: The signal on antenna is shown in principle only. This signal is sinusoidal. The clock for SIGIN is the same as the clock for SIGOUT.

All information provided in this document is subject to legal disclaimers.

© NXP B.V. 2017. All rights reserved.

8.6.13.2 Signal shape for ISO/IEC14443A and MIFARE NFC-WI/S^{2}C support

The secure IC, e.g. the SmartMX is connected to the PN533 via the pins SIGOUT, SIGIN and P34 / SIC_CLK.

The signal at SIGOUT is a digital 13.56 MHz Miller coded signal between PVSS and SVDD. It is either derived from the external 13.56 MHz carrier signal when in Virtual Card Mode or internally generated when in Wired Card mode.

The register CIU_TxSel controls the setting at SIGOUT.

Note: The clock settings for the Wired Card mode and the Virtual Card mode differ. Refer to the description of the bit SicClockSel in register CIU_TestSel1.

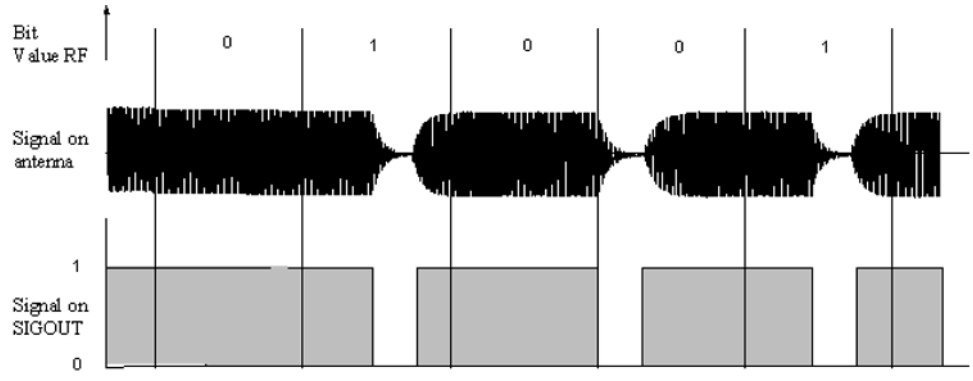

Fig 56. Signal shape for SIGOUT in NFC-WI mode

The signal at SIGIN is a digital Manchester coded signal compliant with ISO/IEC 14443A with a subcarrier frequency of 847.5 kHz generated by the secure IC.

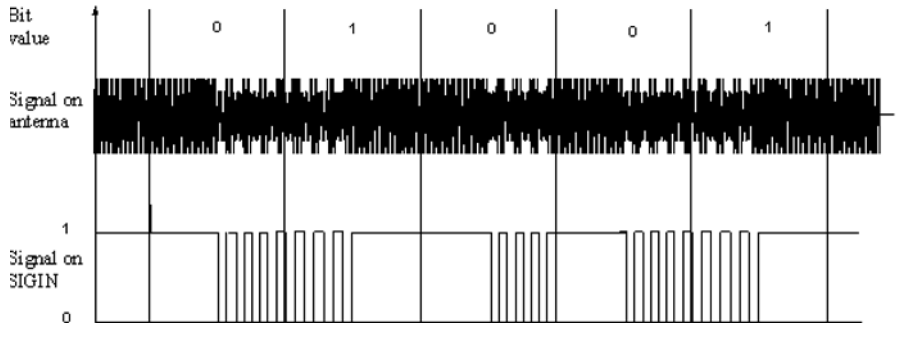

Fig 57. Signal shape for SIGIN in NFC-WI mode

All information provided in this document is subject to legal disclaimers.

© NXP B.V. 2017. All rights reserved.

8.6.13.3 NFC-WI/S^{2}C initiator mode

The PN533 includes 2 counters of 127 and 31, with digital filtering, to enable activation from the secure IC (ACT_REQ_Si), or the command to go from data to command mode (ESC_REQ).

Table 164. NFC_WI_control register (address 610Eh) bit allocation

Bit	7	6	5	4	3	2	1	0
Symbol	-	-	-	-	nfc_wi_status	-	nfc_wi_en_act_req_im	nfc_wi_en_clk
Reset	0	0	0	0	0	0	0	0
Access	R	R	R	R	R	R/W	R/W	R/W

Table 165. Description of NFC_WI_control bits

Bit	Symbol	Description
7 to 4	-	Reserved.
3	nfc_wi_status	**Indicates a NFC-WI counter has reached its limit.** Set to logic 1, when the counter has reached its limit. It can also be used as an interrupt for the 80C51 if the IE0_6 bit is set to logic level 1 (see Table 10 on page 16).
2	-	Reserved.
1	nfc_wi_en_act_req_im	**Selection of the NFC-WI counter**. This bit is used to select the 31 or 127 counter. When set to logic 0, the 31 counter is selected. When set to logic 1, the 127 counter is selected.
0	nfc_wi_en_clk	**Enable the NFC-WI counters on SIGIN.** When set to logic level 1, the counters can run and count the clock cycles within 2 and 12 MHz.

8.6.14 Hardware support for FeliCa and NFC polling

8.6.14.1 Polling sequence functionality for initiator

1. Timer: The CIU has a timer, which can be programmed to generate an interrupt at the end of each timeslot, or if required at the end of the last timeslot only.
2. The receiver can be configured to receive frames continuously. The receiver is ready to receive immediately after the last frame has been transmitted. This mode is activated by setting to logic level 1 the bit RxMultiple in the register CIU_RxMode. It has to be set to logic level 0 by firmware.
3. The CIU adds one byte at the end of every received frame, before it is transferred into the FIFO buffer. This byte indicates whether the received frame is correct (see register Err). The first byte of each frame contains the length byte of the frame.
4. The length of one frame is 18 or 20 bytes (+1 byte error Info). The size of the FIFO is 64 bytes. This means 3 frames can be stored in the FIFO at the same time. If more than 3 frames are expected, the 80C51 has to read out data from the FIFO, before the FIFO is filled completely. In the case that the FIFO overflows, data is lost. (See error flag BufferOvfl).

All information provided in this document is subject to legal disclaimers.

© NXP B.V. 2017. All rights reserved.

8.6.14.2 Polling sequence functionality for target

1. The 80C51 has to configure the CIU with the correct polling response parameters for the Polling command.
2. To activate the automatic polling in target mode, the AutoColl Command has to be activated.
3. The CIU receives the polling command send out by an initiator and answers with the polling response. The timeslot is selected automatically (The timeslot itself is randomly generated, but in the range 0 to TSN, which is defined by the polling command). The CIU compares the system code, stored in byte 17 and 18 of the Config Command with the system code received with the polling command by an initiator. If the system code is equal, the CIU answers according to the configured polling response. The system code FF(hex) acts as a wildcard for the system code bytes (i.e. a target of a system code 1234(hex) answers to the polling command with one of the following system codes 1234(hex), 12FF(hex), FF34 (hex) or FFFF(hex)). If the system code does not match no answer is sent back by the PN533. If a valid command, which is not a Polling command, is received by the CIU, no answer is sent back and the command AutoColl is stopped. The received frame is stored in the FIFO.

8.6.14.3 Additional hardware support for FeliCa and NFC

Additionally to the polling sequence support for the FeliCa mode, the PN533 supports the check of the LEN-byte.

The received LEN-byte is checked by the registers CIU_FelNFC1 and CIU_FelNFC2:

DataLenMin in register CIU_FelNFC1 defines the minimum length of the accepted frame length. This register is 6 bits long. Each value represents a length of 4.

DataLenMax in register CIU_FelNFC2 defines the maximum length of the accepted frame. This register is 6 bits long. Each value represents a length of 4. If set to logic 0 this limit is switched off. If the length is not in the supposed area, the packed is not transferred to the FIFO and receiving is kept active.

Example 1:

- DataLenMin = 4
  - The length shall be greater or equal 16.
- DataLenMax = 5
  - The length shall be smaller than 20. Valid area: 16, 17, 18, 19

Example 2:

- DataLenMin = 9
  - The length shall be greater or equal 36.
- DataLenMax = 0
  - The length shall be smaller than 256. Valid area: 36 to 255

All information provided in this document is subject to legal disclaimers.

© NXP B.V. 2017. All rights reserved.

8.6.15 CRC co-processor

The CRC preset value of the CRC co-processor can be configured to 0000h, 6363h, A671h or FFFFh depending of the bits CRCPreset in the register Mode.This is only valid when using CalcCRC command (see Section 8.6.20.7 “CalcCRC command” on page 145).

During a communication, the preset value of the CRC coprocessor is set according to the bits CIU_RxMode and CIU_TxMode.

The CRC polynomial for the 16-bit CRC is fixed to $x^{16} + x^{12} + x^5 + 1$.

The CRC co-processor is configurable to handle the different MSB and LSB requirements for the different protocols.The bit MSBFirst in the register CIU_Mode indicates that the data will be loaded with MSB first

The registers CRCResult-Hi and CRCResult-Lo indicate the result of the CRC calculation.

8.6.16 FIFO buffer

An 64*8 bits FIFO buffer is implemented in the CIU. It buffers the input and output data stream between the 80C51 and the internal state machine of the CIU. Thus, it is possible to handle data streams with lengths of up to 64 bytes without taking timing constraints into account.

8.6.16.1 Accessing the FIFO buffer

The FIFO-buffer input and output data bus is connected to the register CIU_FIFOData. Writing to this register stores one byte in the FIFO-buffer and increments the internal FIFO-buffer write-pointer. Reading from this register shows the FIFO-buffer contents stored at the FIFO-buffer read-pointer and decrements the FIFO-buffer read-pointer. The distance between the write- and read-pointer can be obtained by reading the register CIU_FIFOLevel.

When the 80C51 starts a command, the CIU may, while the command is in progress, access the FIFO-buffer according to that command. Physically only one FIFO-buffer is implemented, which can be used in input- and output direction. Therefore the 80C51 has to take care, not to access the FIFO-buffer in an unintended way.

8.6.16.2 Controlling the FIFO buffer

Besides writing to and reading from the FIFO-buffer, the FIFO-buffer pointers might be reset by setting the bit FlushBuffer in the register CIU_FIFOLevel. Consequently, the FIFOLevel[6:0] bits are set to logic level 0, the bit BufferOvfl in the register CIU_Error is set to logic level 0, the actually stored bytes are not accessible anymore and the FIFO-buffer can be filled with another 64 bytes again.

All information provided in this document is subject to legal disclaimers.

© NXP B.V. 2017. All rights reserved.

8.6.16.3 Status information about the FIFO buffer

The 80C51may obtain the following data about the FIFO-buffers status:

- Number of bytes already stored in the FIFO-buffer: FIFOLevel[6:0] in register CIU_FIFOLevel
- Warning, that the FIFO-buffer is quite full: HiAlert in register CIU_Status1
- Warning, that the FIFO-buffer is quite empty: LoAlert in register CIU_Status1
- Indication, that bytes were written to the FIFO-buffer although it was already full: BufferOvfl in register CIU_Error.

  BufferOvfl can be set to logic level 0 only by setting to logic level 1 bit FlushBuffer in the register CIU_FIFOLevel.

The CIU can generate an interrupt signal

- If LoAlertIEn in register CIU_CommIEn is set to logic 1, it will set to logic level 1 CIU_IRQ_0 in the register CIU_Status1, when LoAlert in the same register changes to logic level 1.
- If HiAlertIEN in register CIU_CommIEn is set to logic 1, it will set to logic level 1 CIU_IRQ_0 in the register CIU_Status1, when HiAlert in the same register changes to logic level 1.

The flag HiAlert is set to logic 1 if only WaterLevel[5:0] bits (as set in register CIU_WaterLevel) or less can be stored in the FIFO-buffer. It is generated by the following equation:

$$HiAlert = (64 - FIFOLenght) \leq WaterLevel$$

The flag LoAlert is set to logic 1 if WaterLevel[5:0] bits (as set in register CIU_WaterLevel) or less are actually stored in the FIFO-buffer. It is generated by the following equation:

$$LoAlert = FIFOLenght \leq WaterLevel$$

All information provided in this document is subject to legal disclaimers.

© NXP B.V. 2017. All rights reserved.

8.6.17 CIU_timer

A timer unit is implemented in the CIU: CIU_timer. The 80C51 use CIU_timer to manage timing relevant tasks for contactless communication. CIU_timer may be used in one of the following configurations:

- Timeout-Counter
- Watch-Dog Counter
- Stop Watch
- Programmable One-Shot
- Periodical Trigger

CIU_timer can be used to measure the time interval between two events or to indicate that a specific event occurred after a specific time. CIU_timer can be triggered by events which will be explained in the following, but it does not itself influence any internal event (e.g. A timeout during data reception does not influence the reception process automatically). Furthermore, several timer related bits are set and these bits can be used to generate an interrupt.

CIU_timer has a input clock of 6.78 MHz (derived from the 27.12 MHz quartz). CIU_timer consists of 2 stages: 1 prescaler and 1 counter.

The prescaler is a 12 bits counter. The reload value for the prescaler can be defined between 0 and 4095 in register CIU_TMode and CIU_TPrescaler. This decimal value is called TPrescaler.

The reload value TReloadVal for the counter is defined with 16 bits in a range from 0 to 65535 in the registers CIU_TReloadVal_Lo and CIU_TReloadVal_Hi.

The current value of CIU_timer is indicated by the registers CIU_TCounterVal_lo and CIU_TCounterVal_hi.

If the counter reaches 0 an interrupt will be generated automatically indicated by setting the TimerIRq flag in the register CommonIRq. If enabled, it will set to logic level 1 CIU_IRQ_1 in the register CIU_Status1. TimerIRq flag can be set to logic level 1 or to logic level 0 by the 80C51. Depending on the configuration, CIU_timer will stop at 0 or restart with the value of the registers CIU_TReloadVal_Lo and CIU_TReloadVal_Hi.

Status of CIU_timer is indicated by the bit TRunning in the register CIU_Status1.

CIU_timer can be manually started by TStartNow in register Control or manually stopped by TStopNow in register Control.

Furthermore CIU_timer can be activated automatically by setting the bit TAuto in the register CIU_TMode to fulfill dedicated protocol requirements automatically.

The time delay of a timer stage is the reload value +1.

Maximum time:

TPrescaler = 4095, TReloadVal = 65535 => 4096*65536/6.78 MHz = 39.59 s

Example:

To indicate 100 ms it is required to count 678 clock cycles. This means the value for TPrescaler has to be set to TPrescaler = 677.The timer has now an input clock of 100 us. The timer can count up to 65535 timeslots of 100 ms.

All information provided in this document is subject to legal disclaimers.

© NXP B.V. 2017. All rights reserved.

8.6.18 Interrupt request system

The CIU indicates certain events by setting interrupt bits in the register CIU_Status1 and, in addition it will set to logic level 1 CIU_interrupt1 or CIU_IRQ_0. If this interrupt is enabled (see Table 12 on page 17) the 80C51 will be interrupted. This allows the implementation of efficient interrupt-driven firmware.

8.6.18.1 Interrupt sources

The following table shows the integrated interrupt flags, the corresponding source and the condition for its activation.

The interrupt flag TimerIRq in the register CIU_CommIrq indicates an interrupt set by the timer unit. The setting is done when the timer decrements from logic level 1 down to logic level 0.

The TxIRq bit in the register CIU_CommIrq indicates that the transmitter has finished. If the state changes from sending data to transmitting the end of frame pattern, the transmitter unit sets automatically the interrupt bit to logic level 1.

The CRC coprocessor sets the flag CRCIRq in the register CIU_DivIrq after having processed all data from the FIFO buffer. This is indicated by the flag CRCReady set to logic level 1.

The RxIRq flag in the register CIU_CommIrq indicates an interrupt when the end of the received data is detected.

The flag IdleIRq in the register CIU_CommIrq is set to level 1 if a command finishes and the content of the CIU_Command register changes to idle.

The flag HiAlertIRq in the register CIU_CommIrq is set to level 1 if the HiAlert bit is set to logic 1, that means the Contactless FIFO buffer has reached the level indicated by the bits WaterLevel[5:0].

The flag LoAlertIRq in the register CIU_CommIrq is set to logic level 1 if the LoAlert bit is set to logic level 1, that means the Contactless FIFO buffer has reached the level indicated by the bits WaterLevel[5:0].

The flag RFOnIRq in the register CIU_DivIrq is set to logic level 1, when the RF level detector detects an external RF field.

The flag RFOffIRq in the register CIU_DivIrq is set to logic level 1, when a present external RF field is switched off.

The flag ErrIRq in the register CIU_CommIrq indicates an error detected by the CIU during sending or receiving. This is indicated by any bit set to logic 1 in register CIU_Error.

The flag ModeIRq in the register CIU_DivIrq indicates that the data mode detector has detected the current mode.

These flags are summarized with 2 interrupt bits within the register CIU_Status1:

- the high priority interrupt sources are summarized with CIU_IRQ_0.
- the low priority interrupt sources are summarized with CIU_IRQ_1.

See the register Table 191 on page 161.

All information provided in this document is subject to legal disclaimers.

© NXP B.V. 2017. All rights reserved.

Table 166. High priority interrupt sources (CIU_IRQ_0)

Interrupt Flag	Interrupt source	Set automatically, WHEN
TxIRq	Transmitter	a transmitted data stream ends
RxIRq	Receiver	a received data stream ends
HiAlertIRq	FIFO-buffer	the FIFO-buffer is getting full
LoAlertIRq	FIFO-buffer	the FIFO-buffer is getting empty

Table 167. Low priority interrupt sources (CIU_IRQ_1)

Interrupt Flag	Interrupt source	Set automatically, WHEN
TimerIRq	Timer Unit	the timer counts from 1 to 0
CRCIRq	CRC-Coprocessor	all data from the FIFO buffer have been processed
IdleIRq	CIU_Command Register	a command execution finishes
RFOnIRq	RF Level Detector	an external RF field is detected
RFOffIRq	RF Level Detector	a present external RF field is switched off
ErrIRq	CIU	an error is detected
ModeIRq	data mode detector	the mode has been detected

8.6.19 CIU Power Reduction Modes

8.6.19.1 Hard-Power-down

A Hard-Power-down is enabled when RSTPD_N is low. None of the CIU blocks are running, even the RF level detector.

8.6.19.2 CIU Power-down

The CIU Power-down mode is entered immediately by setting the Power-down bit in the register CIU_Command. All CIU blocks are switched off, except the 27.12 MHz oscillator and the RF level detector.

All registers and the FIFO will keep the content during CIU Power-down.

If the bit AutoWakeUp in the register CIU_TxAuto is set and an external RF field is detected, the CIU Power-down mode is left automatically.

After setting bit Power-down to logic level 0 in the register CIU_Command, it needs 1024 clocks cycle until the CIU Power-down mode is left indicated by the Power-down bit itself. Setting it to logic 0 does not immediately set it to logic level 0. It is automatically set to logic level 0 by the CIU when the CIU Power-down mode is left.

When in CIU Power-down mode and DriverSel[1:0] is no set to 00b (see Table 218 on page 172), to ensure a minimum impedance at the transmitter outputs, the CWGsNOn[3], CWGsNOff[3], ModGsNOn[3], ModGsNOff[3], CWGsP[5], ModGsP[5] bits are set to logic level 1, but it is not readable in the registers.

All information provided in this document is subject to legal disclaimers.

© NXP B.V. 2017. All rights reserved.

8.6.19.3 Transmitter Power-down

The Transmitter Power-down mode switches off the internal antenna drivers to turn off the RF field by setting the bits Tx1RFEn and Tx2RFEn in the register CIU_TxControl to logic level 0. The receiver is still switched on, meaning the CIU can be accessed by a second NFC device as a NFCIP-1 target.

Note: In case the bit InitialRFOn has been set to logic 1, when the drivers were already switched on, it is needed either to set InitialRFOn to logic level 0, before setting the bits Tx1RFEn and Tx2RFEn in the register CIU_TxControl to logic 0, or to set also the bits Tx1RFAutoEn and Tx2RFAutoEn in the register CIU_TxAuto to logic level 0.

8.6.20 CIU command set

8.6.20.1 General description

The CIU behaviour is determined by an internal state machine capable to perform a certain set of commands. Writing the according command code to the CIU_Command register starts the commands.

Arguments and/or data necessary to process a command are mainly exchanged via the FIFO buffer.

8.6.20.2 General behaviour

- Each command, that needs a data stream (or data byte stream) as input will immediately process the data it finds in the FIFO buffer. An exception to this rule is the Transceive command. Using this command the transmission is started with the StartSend bit in CIU_BitFraming register.
- Each command that needs a certain number of arguments will start processing only when it has received the correct number of arguments via the FIFO buffer.
- The FIFO buffer is not cleared automatically at command start. Therefore, it is also possible to write the command arguments and/or the data bytes into the FIFO buffer and start the command afterwards.
- Each command may be interrupted by the 80C51 by writing a new command code into the CIU_Command register e.g.: the Idle command.

All information provided in this document is subject to legal disclaimers.

© NXP B.V. 2017. All rights reserved.

8.6.20.3 Commands overview

Table 168. Command overview

Command	Command code	Action
Idle	0000	No action; cancels current command execution.
Config	0001	Configures the CIU for FeliCa, MIFARE and NFCIP-1 communication.
Generate RandomID	0010	Generates 10-byte random ID number
CalcCRC	0011	Activates the CRC co-processor or perform self-test.
Transmit	0100	Transmits data from the FIFO buffer.
NoCmdChange	0111	No command change. This command can be used to modify different bits in the CIU_Command register without touching the command. e.g. Power-down bit.
Receive	1000	Activates the receiver circuitry.
SelfTest	1001	Activates the self-test. Not described in this chapter.
Transceive	1100	If bit Initiator in the register CIU_Control is set to logic 1: Transmits data from FIFO buffer to the antenna and activates automatically the receiver after transmission is finished. If bit Initiator in the register CIU_Control is set to logic 0: Receives data from antenna and activates automatically the transmitter after reception.
AutoColl	1101	Handles FeliCa polling (Card operating mode only) and MIFARE anticollision (Card operating mode only)
MFAuthent	1110	Performs the MIFARE 1 KB or MIFARE 4 KB emulation authentication in MIFARE Reader/Writer mode only.
Soft Reset	1111	Resets the CIU.

8.6.20.4 Idle command

The CIU is in idle mode. This command is also used to terminate the actual command.

All information provided in this document is subject to legal disclaimers.

© NXP B.V. 2017. All rights reserved.

8.6.20.5 Config command

To configure the automatic MIFARE Anticollision, FeliCa Polling and NFCID3, the data used for these transactions have to be stored internally. All the following data have to be written to the FIFO in this order:

- SENS_RES (2 bytes): in order byte0, byte1
- NFCID1 (3 bytes): in order byte0, byte1, byte 2; the first NFCID1 byte if fixed to 08h and the check byte is calculated automatically
- SEL_RES (1 byte)
- Polling response (2 bytes (shall be 01h, FEh)+ 6 bytes NFCID2 + 8 bytes Pad + 2 bytes system code)
- NFCID3 (1 byte)

In total 25 bytes which are transferred into an internal buffer with the Config command.

The complete NFCID3 is 10 bytes long and consist of the 3 NFCID1 bytes, the 6 NFCID2 bytes and the NFCID3 byte listed above.

To read out this configuration (after it has been loaded), the command Config with an empty FIFO buffer has to be started. In this case the 25 bytes are transferred from the internal buffer to the FIFO.

The CIU has to be configured after each power up, before using the automatic Anticollision/Polling function (AutoColl command). During a Hard-Power-down (RSTPD_N set to logic level 0) this configuration remains unchanged.

This command terminates automatically when finished and the active command is Idle.

8.6.20.6 Generate RandomID command

This command generates a 10-byte random number stored in the internal 25 bytes buffer and overwrites the 10 NFCID3 bytes. This random number might be used for fast generation of all necessary ID bytes for the automatic Anticollision / Polling function.

Note: To configure the CIU, Config command has to be used first.

This command terminates automatically when finished and the active command is Idle.

8.6.20.7 CalcCRC command

The content of the FIFO is transferred to the CRC co-processor and a CRC calculation is started. The result is stored in the CRCResult register. The CRC calculation is not limited to a dedicated number of bytes. The calculation is not stopped when the FIFO gets empty during the data stream. The next byte written to the FIFO is added to the calculation.

The preset value of the CRC is defined by the CRCPreset bits of the register CIU_Mode, and the chosen value is loaded to the CRC co-processor when the command is started.

This command has to be terminated by firmware by writing any command to the CIU_Command register e.g. the Idle command.

If SelfTest in register CIU_AutoTest is set to logic 1, the CRC co-processor is in Self Test mode and performs a digital self-test. The result of the self-test is written in the FIFO.

All information provided in this document is subject to legal disclaimers.

© NXP B.V. 2017. All rights reserved.

8.6.20.8 Transmit command

The content of the FIFO is transmitted immediately after starting the command. Before transmitting FIFO content, all relevant register settings have to be set to transmit data in the selected mode.

This command terminates automatically when the FIFO gets empty and the active command is Idle. It can be terminated by any other command written to the CIU_Command register.

8.6.20.9 NoCmdChange command

This command does not influence any ongoing command in the CIU_Command register. It can be used to manipulate any bit except the command bits in the CIU_Command register, e.g. the bits RcvOff or Power-down.

8.6.20.10 Receive command

The CIU activates the receiver path and waits for any data stream to be received. The correct settings for the expected mode have to be set before starting this command.

This command terminates automatically when the receive data stream ends and the active command is Idle. This is indicated either by the end of frame pattern or by the length byte depending on the selected framing and speed.

Note: If the bit RxMultiple in the register CIU_RxMode is set to logic 1, the Receive command does not terminate automatically. It has to be terminated by setting any other command in the CIU_Command register.

8.6.20.11 Transceive command

This circular command repeats transmitting data from the FIFO and receiving data from the RF field continuously. If the bit Initiator in the register CIU_Control is set to logic 1, it indicates that the first action is transmitting and after having finished transmission the receiver is activated to receive data. If the bit Initiator in the CIU_Control register is set to logic 0, the first action is receiving and after having received a data stream, the transmitter is activated to transmit data. In the second configuration the PN533 first acts as a receiver and if a data stream is received it switches to the Transmit mode.

Table 169. Transceive command scenario

Communication step	Initiator =1	Initiator=0
1	Send	Receive
2	Receive	Send
3	Send	Receive
4	Receive	Send

Each transmission process has to be started with setting bit StartSend in the register CIU_BitFraming. This command has to be cleared by firmware by writing any command to the CIU_Command register e.g. the command idle.

Note: If the bit RxMultiple in register CIU_RxMode is set, this command will never leave the receiving state, because the receiving will not be cancelled automatically.

All information provided in this document is subject to legal disclaimers.

© NXP B.V. 2017. All rights reserved.

8.6.20.12 AutoColl command

This command automatically handles the MIFARE activation and the FeliCa polling in the Card Operation mode. The bit Initiator in the CIU_Control register has to be set to logic level 0 for correct operation. During this command, Mode Detector is active if not deactivated by setting the bit ModeDetOff in the CIU_Mode register. After Mode Detector detects a mode, the mode dependent registers are set according to the received data. In case of no external RF field this command resets the internal state machine and returns to the initial state but it will not be terminated.

When the Autocoll command terminates the Transceive command gets active.

During Autocoll command:

- The CIU interrupt bits, except RfOnIRq, RfOffIRq and SIGINActIRq (see Table 188 on page 159), are not supported. Only the last received frame will serve the CIU interrupts.
- During ISO/IEC 14443A activation, TxCRCEn and RxCRCEn bits are defined by the AutoColl command. The changes cannot be observed at the CIU_TxMode and CIU_RxMode registers. When the Transceive command is active, the value of the bits is relevant.
- During Felica activation (polling), TxCRCEn and RxCRCEn bits are always relevant and are not overruled by the Autocoll command. Their value must be set to logic level 1 according the FeliCa protocol.

Note: Pay attention, that the FIFO will also receive the two CRC check bytes of the last command, even if they are already checked and correct, and if the state machine (Anticollision and Select routine) has not been executed, and 106 kbit is detected.

This command can be cleared by firmware by writing any other command to the CIU_Command register, e.g. the Idle command. Writing the same content again to the CIU_Command register resets the state machine.

All information provided in this document is subject to legal disclaimers.

© NXP B.V. 2017. All rights reserved.

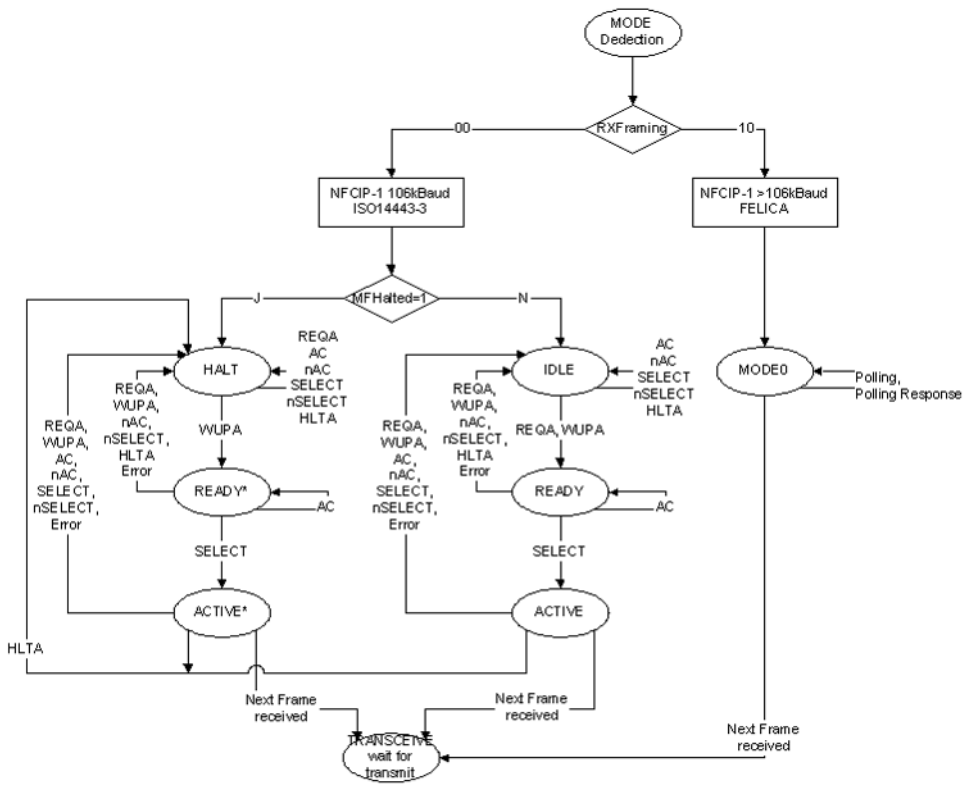

Fig 58. AutoColl command

- NFCIP-1 106 kbps passive communication mode:

  The MIFARE anticollision is finished and the command changes automatically to Transceive. The FIFO contains the ATR_REQ frame including the start byte F0h. The bit TargetActivated in the register CIU_Status2 is set to logic 1

- NFCIP-1 212 and 424 kbps passive communication mode:

  The FeliCa polling command is finished and the command has automatically changed to Transceive. The FIFO contains the ATR_REQ frame. The bit TargetActivated in the register CIU_Status2 is set to logic 1.

- NFCIP-1 106, 212 and 424 kbps active communication mode:

  This command is changing automatically to Transceive. The FIFO contains the ATR_REQ frame. The bit TargetActivated in the register CIU_Status2 is set to logic 0. For 106 kbps only, the first byte in the FIFO indicates the start byte F0h and the CRC is added into the FIFO.

- ISO/IEC 14443A/MIFARE (Card Operating mode):

  The MIFARE anticollision is finished and the command has automatically changed to Transceive. The FIFO contains the first command after the Select. The bit TargetActivated in the register CIU_Status2 is set to logic 1.

- FeliCa (Card Operating mode):

  The FeliCa polling command is finished and the command has automatically changed to Transceive. The FIFO contains the command after the Polling in the FeliCa protocol. The bit TargetActivated in the register CIU_Status2 is set to logic 1.

All information provided in this document is subject to legal disclaimers.

© NXP B.V. 2017. All rights reserved.

8.6.20.13 MFAuthent command

This command handles the MIFARE authentication in Reader/Writer mode to enable a secure communication to any MIFARE 1 KB and MIFARE 4 KB emulation card. The following data shall be written to the FIFO before the command can be activated:

- Authentication command code (60h for key A, 61h for key B)
- Block address
- Sector key byte 0
- Sector key byte 1
- Sector key byte 2
- Sector key byte 3
- Sector key byte 4
- Sector key byte 5
- Card serial number byte 0
- Card serial number byte 1
- Card serial number byte 2
- Card serial number byte 3

In total 12 bytes shall be written to the FIFO.

Note: When the MFAuthent command is active, any FIFO access is blocked. Anyhow if there is an access to the FIFO, the bit WrErr in the register CIU_Error is set to logic level 1.

This command terminates automatically when the MIFARE 1KB or MIFARE 4 KB emulation card is authenticated. The bit MFCrypto1On in the register CIU_Status2 is set to logic level 1.

This command does not terminate automatically when the card does not answer, therefore CIU timer should be initialized to automatic mode. In this case, beside the bit IdleIRq, the bit TimerIRq can be used as termination criteria. During authentication processing, the bits RxIRq and TxIRq of CIU_CommIrq register are blocked.

The Crypto1On bit is only valid after termination of the MFAuthent command (either after processing the authentication or after writing the Idle command in the register CIU_Command).

In case there is an error during the MIFARE authentication, the ProtocolErr bit in the CIU_Error register is set to logic 1 and the Crypto1On bit in CIU_Status2 register is set to logic 0.

8.6.20.14 SoftReset command

This command performs a reset of the CIU. The configuration data of the internal buffer remains unchanged. All registers are set to the reset values.

When SoftReset is finished, the active command switches to Idle.

All information provided in this document is subject to legal disclaimers.

© NXP B.V. 2017. All rights reserved.

8.6.21 CIU tests signals

8.6.21.1 CIU self-test

The CIU has the capability to perform a self-test. To start the self-test the following procedure has to be performed:

1. Perform a SoftReset.
2. Clear the internal buffer by writing 25 bytes of 00h and perform the Config command.
3. Enable the self-test by writing the value 09h to the register CIU_AutoTest.
4. Write 00h to the FIFO.
5. Start the self-test with the CalcCRC command.
6. The self-test will be performed.
7. When the self-test is finished, the FIFO is contains the following bytes:
   - Correct answer for VersionReg equal to 80h:

     0x00, 0xaa, 0xe3, 0x29, 0x0c, 0x10, 0x29, 0x6b

     0x76, 0x8d, 0xaf, 0x4b, 0xa2, 0xda, 0x76, 0x99

     0xc7, 0x5e, 0x24, 0x69, 0xd2, 0xba, 0xfa, 0xbc

     0x3e, 0xda, 0x96, 0xb5, 0xf5, 0x94, 0xb0, 0x3a

     0x4e, 0xc3, 0x9d, 0x94, 0x76, 0x4c, 0xea, 0x5e

     0x38, 0x10, 0x8f, 0x2d, 0x21, 0x4b, 0x52, 0xbf

     0xfb, 0xf4, 0x19, 0x94, 0x82, 0x5a, 0x72, 0x9d

     0xba, 0x0d, 0x1f, 0x17, 0x56, 0x22, 0xb9, 0x08

All information provided in this document is subject to legal disclaimers.

© NXP B.V. 2017. All rights reserved.

8.6.21.2 CIU test bus

The test bus is implemented for production test purposes. The following configuration can be used to improve the design of a system using the PN533. The test bus allows to route internal signals to output pins.

The Observe_testbus register is used to enable this functionality.

Table 170. Observe_testbus register (address 6104h) bit allocation

Bit	7	6	5	4	3	2	1	0
Symbol	-	-	-	-	-	-	-	observe_ciu
Reset	0	0	0	0	0	0	0	0
Access	R	R	R	R	R	R	R	R/W

Table 171. Description of Observe_testbus bits

Bit	Symbol	Description
7 to 1	-	Reserved.
0	observe_ciu	**Configure the pads P3x (P30 to P35), RSTOUT_N and P70_IRQ to observe internal CIU data bus.** When set to logic 1, the pads are configured in output mode and show the internal data bus D0 to D6 of the CIU. P70_IRQ is the 13.56 MHz digital clock of CIU (generated from field or crystal).

The test bus signals are selected by accessing TestBusSel in register CIU_TestSel2.

Table 172. TstBusBitSel set to 07h

Test bus bit	Test signal	Comments
D6	sdata	shows the actual received data value.
D5	scoll	shows if in the actual bit a collision has been detected (106 kbit/s only)
D4	svalid	shows if sdata and scoll are valid
D3	sover	shows that the receiver has detected a stop bit (ISO/IEC 14443A/MIFARE mode only)
D2	RCV_reset	shows if the receiver is reset
D1	RFon filtered	shows the value of the internal RF level detector
D0	Envelope	shows the output of the internal coder

Table 173. TstBusBitSel set to 0Dh

Test bus bit	Test signal	Comments
D6	clkstable	shows if the oscillator delivers a stable signal
D5	clk27/8	shows the output signal of the oscillator divided by 8
D4	clk27rf/8	shows the clk27rf signal divided by 8
D3	clk13/4	shows the clk13rf divided by 4
D2	clk27	shows the output signal of the oscillator
D1	clk27rf	shows the RF clock multiplied by 2
D0	clk13rf	shows the RF clock of 13.56 MHz

All information provided in this document is subject to legal disclaimers.

© NXP B.V. 2017. All rights reserved.

8.6.21.3 Test signals at pin AUX

Each signal can be switched to pin AUX1 or AUX2 by setting SelAux1 or SelAux2 in the register CIU_AnalogTest. See Table 280 on page 195

8.6.21.4 PRBS

Enables the Pseudo Random Bit Stream of 9-bit or 15-bit length sequence, PRBS9 or PRBS15, according to ITU-TO150. To start the transmission of the defined datastream, Transmit command has to be activated. The preamble/Sync byte/start bit/parity bit are generated automatically depending on the selected mode.

Note: All relevant registers to transmit data have to be configured before entering PRBS mode according ITU-TO150.

All information provided in this document is subject to legal disclaimers.

© NXP B.V. 2017. All rights reserved.

8.6.22 CIU memory map

The registers of the CIU are either map into the SFR or into the XRAM memory space.

Table 174. Contactless Interface Unit SFR memory map

ADDR	Byte size	Register name	Description
D1h	1	CIU_Command	Starts and stops the command execution
D2h	1	CIU_CommlEn	Control bits to enable and disable the passing of interrupt requests
D3h	1	CIU_DivlEn	Control bits to enable and disable the passing of interrupt requests
D4h	1	CIU_CommIrq	Contains common Interrupt Request flags
D5h	1	CIU_DivIrq	Contains diverse Interrupt Request flags
D6h	1	CIU_Error	Error flags showing the error status of the last command executed
DFh	1	CIU_Status1	Contains status flags of the CRC, Interrupt Request System and FIFO buffer
E9h	1	CIU_Status2	Contain status flags of the Receiver, Transmitter and Data Mode Detector
EAh	1	CIU_FIFOData	in- and output of 64 bytes FIFO buffer
EBh	1	CIU_FIFOLevel	Indicates the number of bytes stored in the FIFO
ECh	1	CIU_WaterLevel	Defines the thresholds for FIFO under- and overflow warning
EDh	1	CIU_Control	Contains miscellaneous Control bits
EEh	1	CIU_BitFraming	Adjustments for bit oriented frames
EFh	1	CIU_Coll	Bit position of the first bit collision detected on the RF-interface

Table 175. Contactless Interface Unit extension memory map

ADDR	Byte size	Register name	Description
6301h	1	CIU_Mode	Defines general modes for transmitting and receiving
6302h	1	CIU_TxMode	Defines the transmission data rate and framing during transmission
6303h	1	CIU_RxMode	Defines the transmission data rate and framing during receiving
6304h	1	CIU_TxControl	Controls the logical behaviour of the antenna driver pins TX1 and TX2
6305h	1	CIU_TxAuto	Controls the settings of the antenna driver
6306h	1	CIU_TxSel	Selects the internal sources for the antenna driver
	1	CIU_RxSel	Selects internal receiver settings
6308h	1	CIU_RxThreshold	Selects thresholds for the bit decoder
6309h	1	CIU_Demod	Defines demodulator settings
630Ah	1	CIU_FelNFC1	Defines the length of the valid range for the received frame
630Bh	1	CIU_FelNFC2	Defines the length of the valid range for the received frame
630Ch	1	CIU_MifNFC	Controls the communication in ISO/IEC 14443/MIFARE and NFC target mode at 106 kbit/s
630Dh	1	CIU_ManualRCV	Allows manual fine tuning of the internal receiver

All information provided in this document is subject to legal disclaimers.

© NXP B.V. 2017. All rights reserved.

Table 175. Contactless Interface Unit extension memory map *...continued*

ADDR	Byte size	Register name	Description
630Eh	1	CIU_TypeB	Configure the ISO/IEC 14443 type B
630Fh	1	-	Reserved
6310h	1	-	Reserved
6311h	1	CIU_CRCResultMSB	Shows the actual MSB values of the CRC calculation
6312h	1	CIU_CRCResultLSB	Shows the actual LSB values of the CRC calculation
6313h	1	CIU_GsNOFF	Selects the conductance of the antenna driver pins TX1 and TX2 for load modulation when own RF field is switched OFF
6314h	1	CIU_ModWidth	Controls the setting of the width of the Miller pause
6315h	1	CIU_TxBitPhase	Bit synchronization at 106 kbit/s
6316h	1	CIU_RFCfg	Configures the receiver gain and RF level
6317h	1	CIU_GsNOn	Selects the conductance of the antenna driver pins TX1 and TX2 for modulation, when own RF field is switched ON
6318h	1	CIU_CWGsP	Selects the conductance of the antenna driver pins TX1 and TX2 when not in modulation phase
6319h	1	CIU_ModGsP	Selects the conductance of the antenna driver pins TX1 and TX2 when in modulation phase
631Ah	1	CIU_TMode	Defines settings for the internal timer
631Bh	1	CIU_TPrescaler	
631Ch	1	CIU_TReloadVal_hi	Describes the 16-bit long timer reload value (Higher 8 bits)
631Dh	1	CIU_TReloadVal_lo	Describes the 16-bit long timer reload value (Lower 8 bits)
631Eh	1	CIU_TCounterVal_hi	Describes the 16-bit long timer actual value (Higher 8 bits)
631Fh	1	CIU_TCounterVal_lo	Describes the 16-bit long timer actual value (Lower 8 bits)
6320h	1	-	Reserved
6321h	1	CIU_TestSel1	General test signals configuration
6322h	1	CIU_TestSel2	General test signals configuration and PRBS control
6323h	1	CIU_TestPinEn	Enables test signals output on pins.
6324h	1	CIU_TestPinValue	Defines the values for the 8-bit parallel bus when it is used as I/O bus
6325h	1	CIU_TestBus	Shows the status of the internal test bus
6326h	1	CIU_AutoTest	Controls the digital self-test
6327h	1	CIU_Version	Shows the CIU version
6328h	1	CIU_AnalogTest	Controls the pins AUX1 and AUX2
6329h	1	CIU_TestDAC1	Defines the test value for the TestDAC1
632Ah	1	CIU_TestDAC2	Defines the test value for the TestDAC2
632Bh	1	CIU_TestADC	Show the actual value of ADC I and Q
632Ch	1	-	Reserved for tests
632Dh	1	-	Reserved for tests
632Eh	1	-	Reserved for tests
632Fh	1	CIU_RFlevelDet	Power down of the RF level detector
6330h	1	CIU_SIC_CLK_en	Enables the use of secure IC clock on P34 / SIC_CLK.

All information provided in this document is subject to legal disclaimers.

© NXP B.V. 2017. All rights reserved.

8.6.23 CIU register description

8.6.23.1 CIU register bit behaviour

Depending of the functionality of a register, the access condition to the bits can vary. The following table describes the access conditions:

Table 176. Behavior of register bits

Abbreviation	Behavior	Description
R/W	Read and Write	These bits can be written and read by the 80C51. Since they are used only for control means, there content is not influenced by internal state machines, e.g. CIU_CommIEn may be written and read by the CPU. It will also be read by internal state machines, but never changed by them.
DY	DYnamic	These bits can be written and read by the 80C51. Nevertheless, they may also be written automatically by CIU internal state machines, e.g. the commands in the CIU_Command register change their values automatically after their execution.
R	Read only	These registers hold flags, which value is determined by CIU internal states only, e.g. the CRCReady register can not be written from external but shows CIU internal states.
W	Write only	These registers are used for control means only. They may be written by the 80C51 but can not be read. Reading these registers returns always logic level 0.
Reserved		These registers are not implemented or reserved for NXP testing use.

8.6.23.2 CIU_SIC_CLK_en register (6330h)

Enables the use of P34 / SIC_CLK as secure IC clock.

Table 177. CIU_SIC_CLK_en register (address 6330h) bit allocation

Bit	7	6	5	4	3	2	1	0
Symbol	sic_clk_p34_en	-	-	-	Errorbusbitenable	Errorbusbitsel[2:0]		
Reset	0	0	0	0	0	0	0	0
Access	R/W	R	R	R	R/W	R/W	R/W	R/W

Table 178. Description of CIU_SIC_CLK_en bits

Bit	Symbol	Description
7	sic_clk_p34_en	Set to logic 1, this bit configures P34 / SIC_CLK to be used as secure IC clock: SIC_CLK. Set to logic 0, P34 / SIC_CLK is in normal mode: P34.
6 to 4	-	Reserved
3	Errorbusbitenable	Set to logic 1, enable the error source selected by Errorbusbitsel on AUX pads according to SelAux1 and SelAux2 bits (code 1010b).
2 to 0	Errorbusbitsel[2:0]	Define the error source on ErrorBusBit: **Value** — **Description** 000 — selects ProtocollErr on test bus 001 — selects ParityErr on test bus 010 — selects CRCErr on test bus 011 — selects CollErr on test bus 100 — selects BufferOvfl on test bus 101 — selects RFErr on test bus 110 — selects TempErr on test bus 111 — selects WrErr on test bus

All information provided in this document is subject to legal disclaimers.

© NXP B.V. 2017. All rights reserved.

8.6.23.3 CIU_Command register (D1h or 6331h)

Starts and stops the command execution.

Table 179. CIU_Command register (address D1h or 6331h) bit allocation

Bit	7	6	5	4	3	2	1	0
Symbol	-	-	RcvOff	Power-down	Command			
Reset	0	0	1	0	0	0	0	0
Access	R	R	R/W	DY	DY	DY	DY	DY

Table 180. Description of CIU_Command bits

Bit	Symbol	Description
7 to 6	-	Reserved
5	RcvOff	Set to logic 1, the analog part of the receiver is switched off.
4	Power-down	Set to logic 1, the CIU Power-down mode is entered. This means, internal current consuming blocks of the contactless analog module are switched off, except for the RF level detector. Set to logic 0, the PN533 starts the wake up procedure. During this procedure this bit still shows a logic level 1. A logic level 0 indicates that the PN533 is ready for operations; see Section 8.6.19.2 “CIU Power-down” on page 142. **Note:** The Power-down bit can not be set, when the SoftReset command has been activated.
3 to 0	Command	Activates a command according the Command Code. Reading this register shows, which command is actually executed. See Section 8.6.20 “CIU command set” on page 143.

All information provided in this document is subject to legal disclaimers.

© NXP B.V. 2017. All rights reserved.

8.6.23.4 CIU_CommIEn register (D2h or 6332h)

Control bits to enable and disable the passing of interrupt requests.

Table 181. CIU_CommIEn register (address D2h or 6332h) bit allocation

Bit	7	6	5	4	3	2	1	0
Symbol	-	TxIEn	RXIEn	SiginAct IEn	ModeIEn	CRCIEn	RfOnIEn	RfOffIEn
Reset	0	0	0	0	0	0	0	0
Access	R	R/W	R/W	R/W	R/W	R/W	R/W	R/W

Table 182. Description of CIU_CommIEn bits

Bit	Symbol	Description
7	-	Reserved.
6	TxIEn	When set to logic level 1, allows the transmitter interrupt request (indicated by bit TxIRq) to be propagated to CIU_IRQ_1.
5	RxIEn	When set to logic level 1, allows the receiver interrupt request (indicated by bit RxIRq) to be propagated to CIU_IRQ_1.
4	IdleIEn	When set to logic level 1, allows the idle interrupt request (indicated by bit IdleIRq) to be propagated to CIU_IRQ_0.
3	HiAlertIEn	When set to logic level 1, allows the high alert interrupt request (indicated by bit HiAlertIRq) to be propagated to CIU_IRQ_1.
2	LoAlertIEn	When set to logic level 1, allows the low alert interrupt request (indicated by bit LoAlertIRq) to be propagated to CIU_IRQ_1.
1	ErrIEn	When set to logic level 1, allows the error interrupt request (indicated by bit ErrIRq) to be propagated to CIU_IRQ_0.
0	TimerIEn	When set to logic level 1, allows the timer interrupt request (indicated by bit TimerIRq) to be propagated to CIU_IRQ_0.

8.6.23.5 CIU_DivIEn register (D3h or 6333h)

Controls bits to enable and disable the passing of interrupt requests.

Table 183. CIU_DivIEn register (address D3h or 6333h) bit allocation

Bit	7	6	5	4	3	2	1	0
Symbol	-	-	-	SiginAct IEn	ModeIEn	CRCIEn	RfOnIEn	RfOffIEn
Reset	0	0	0	0	0	0	0	0
Access	R	R	R	R/W	R/W	R/W	R/W	R/W

Table 184. Description of CIU_DivIEn bits

Bit	Symbol	Description
7 to 5	-	Reserved.
4	SiginAct IEn	Allows the SIGIN active interrupt request to be propagated to CIU_IRQ_0.
3	ModeIEn	When set to logic level 1, allows the mode interrupt request (indicated by bit ModeIRq) to be propagated to CIU_IRQ_0.
2	CRCIEn	When set to logic level 1, allows the CRC interrupt request (indicated by bit CRCIRq) to be propagated to CIU_IRQ_0.
1	RfOnIEn	When set to logic level 1, allows the RF field on interrupt request (indicated by bit RfOnIRq) to be propagated to CIU_IRQ_0.
0	RfOffIEn	When set to logic level 1, allows the RF field off interrupt request (indicated by bit RfOffIRq) to be propagated to CIU_IRQ_0.

All information provided in this document is subject to legal disclaimers.

© NXP B.V. 2017. All rights reserved.

8.6.23.6 CIU_CommIrq register (D4h or 6334h)

Contains common CIU interrupt request flags.

Table 185. CIU_CommIrq register (address D4h or 6334h) bit allocation

Bit	7	6	5	4	3	2	1	0
Symbol	Set1	TxIRq	RxIRq	IdleIrq	HiAltertIRq	LoAlertIRq	ErrIRq	TimerIRq
Reset	0	0	0	1	0	1	0	0
Access	W	DY	DY	DY	DY	DY	DY	DY

Table 186. Description of CIU_CommIRQ bits

Bit	Symbol	Description
7	Set1	When set to logic 0 during write operation, the bit set to logic level 1 in the write command are written to logic level 0 in the register. When set to logic 1 during write operation, the bit set to logic level 1 in the write command are written to logic level 1 in the register.
6	TxIRq	Set to logic 1, immediately after the last bit of the transmitted data was sent out.
5	RxIRq	Set to logic 1 when the receiver detects the end of a valid datastream. If the RxNoErr bit in CIU_RxMode register is set to logic 1, RxIRQ is only set to logic 1 when data bytes are available in the FIFO.
4	IdleIrq	Set to logic 1, when a command terminates by itself e.g. when the CIU_Command register changes its value from any command to the Idle command. If an unknown command is started, the CIU_Command register changes its value to the Idle command and the IdleIRq bit is set. Starting the Idle Command by the 80C51 does not set IdleIRq bit.
3	HiAltertIRq	Set to logic 1, when HiAlert bit in CIU_Status1 register is set to logic level 1. In opposition to HiAlert, HiAlertIRq stores this event and can only be reset by Set1 bit.
2	LoAlertIRq	Set to logic 1, when LoAlert bit in CIU_Status1 register is set. In opposition to LoAlert, LoAlertIRq stores this event and can only be reset by Set1 bit.
1	ErrIRq	Set to logic 1, if any error flag in the CIU_Error register is set.
0	TimerIRq	Set to logic 1, when the timer decrements the TimerValue register to zero.

[1] **Remark:** All bits in the register CIU_CommIrq shall be set to logic level 0 by firmware.

All information provided in this document is subject to legal disclaimers.

© NXP B.V. 2017. All rights reserved.

8.6.23.7 CIU_DivIrq register (D5h or 6335h)

Contains miscellaneous interrupt request flags.

Table 187. CIU_DivIrq register (address D5h or 6335h) bit allocation

Bit	7	6	5	4	3	2	1	0
Symbol	Set2	-	-	SiginActIrq	ModeIRq	CRCIRq	RfOnIRq	RfOffIRq
Reset	0	0	0	X	0	0	X	X
Access	W	R	R	DY	DY	DY	DY	DY

Table 188. Description of CIU_DivIrq bits

Bit	Symbol	Description
7	Set2	When set to logic 0 during write operation, the bit set to logic level 1 in the write command are written to logic level 0 in the register. When set to logic 1 during write operation, the bit set to logic level 1 in the write command are written to logic level 1 in the register.
6 to 5	-	Reserved.
4	SiginActIrq	Set to logic level 1, when SIGIN is active. See Section 8.6.13 “NFC-WI/S^{2}C interface support” on page 133. This interrupt is set when either a rising or falling edge is detected on SIGIN.
3	ModeIRq	Set to logic 1, when the mode has been detected by the Data Mode Detector. **Note:** The Data Mode Detector can only be activated by the AutoColl command and is terminated automatically having the detected the communication mode. **Note:** The Data Mode Detector is automatically restarted after each RF reset.
2	CRCIRq	Set to logic 1, when the CRC command is active and all data are processed.
1	RfOnIRq	Set to logic 1, when an external RF field is detected.
0	RfOffIRq	Set to logic 1, when an present external RF field is switched off.

All information provided in this document is subject to legal disclaimers.

© NXP B.V. 2017. All rights reserved.

8.6.23.8 CIU_Error register (D6h or 6336h)

Error flags showing the error status of the last command executed.

Table 189. CIU_Error register (address D6h or 6336h) bit allocation

Bit	7	6	5	4	3	2	1	0
Symbol	WrErr	TempErr	RFErr	BufferOvfl	CollErr	CRCErr	ParityErr	ProtocollErr
Reset	0	0	0	0	0	0	0	0
Access	R	R	R	R	R	R	R	R

Table 190. Description of CIU_Error bits

Bit	Symbol	Description
7	WrErr	Set to logic 1, when data is written into the FIFO by the 80C51 during the AutoColl command or MFAuthent command or if data is written into the FIFO by the 80C51 during the time between sending the last bit on the RF interface and receiving the last bit on the RF interface.
6	TempErr[1]	Set to logic 1, if the internal temperature sensor detects overheating. In this case the antenna drivers are switched off automatically.
5	RFErr	Set to logic 1, if in active communication mode the counterpart does not switch on the RF field in time as defined in NFCIP-1 standard. **Note:** RFErr is only used in active communication mode. The bit RxFraming or the bit TxFraming has to be set to 01h to enable this functionality.
4	BufferOvfl	Set to logic 1, if the 80C51 or if the internal state machine (e.g. receiver) tries to write data into the FIFO buffer although the FIFO buffer is already full.
3	CollErr	Set to logic 1, if a bit-collision is detected. It is set to logic level 0 automatically at receiver start phase. This flag is only valid during the bitwise anticollision at 106 kbit/s. During communication schemes at 212 and 424 kbit/s this flag is always set to logic level 0.
2	CRCErr	Set to logic 1, if RxCRCEn in CIU_RxMode register is set to logic level 1 and the CRC calculation fails. It is set to logic level 0 automatically at receiver start-up phase.
1	ParityErr	Set to logic 1, if the parity check has failed. It is set to logic level 0 automatically at receiver start-up phase. Only valid for ISO/IEC 14443A/MIFARE or NFCIP-1 communication at 106 kbit/s.
0	ProtocollErr	Set to logic 1, if one out of the following cases occurs: • Set to logic 1 if the SOF is incorrect. It is set to logic level 0 automatically at receiver start-up phase. The bit is only valid for 106 kbit in Active and Passive Communication mode. • If bit DetectSync in CIU_Mode register is set to logic 1 during FeliCa communication or Active Communication with transfer speeds higher than 106 kbit, ProtocolErr is set to logic 1 in case of a byte length violation. • During the AutoColl command, ProtocolErr is set to logic 1, if the Initiator bit in CIU_Control register is set to logic 1. • During the MFAuthent Command, ProtocolErr is set to logic 1, if the number of bytes received in one data stream is incorrect. • Set to logic 1, if the Miller Decoder detects 2 pauses below the minimum time according to the ISO/IEC 14443A definitions.

[1] Command execution will clear all error flags except for bit TempErr. A setting by firmware is impossible.

All information provided in this document is subject to legal disclaimers.

© NXP B.V. 2017. All rights reserved.

8.6.23.9 CIU_Status1 register (DFh or 6337h)

Contains status flags of the CRC, Interrupt Request System and FIFO buffer.

Table 191. CIU_Status1 register (address DFh or 6337h) bit allocation

Bit	7	6	5	4	3	2	1	0
Symbol	CIU_IRQ_1	CRCOk	CRCReady	CIU_IRQ_0	TRunning	RFOn	HiAlert	LoAlert
Reset	0	0	1	0	0	X	0	1
Access	R	R	R	R	R	R	R	R

Table 192. Description of CIU_Status1 bits

Bit	Symbol	Description
7	CIU_IRQ_1	This bit shows, if any CIU_IRQ_1 source requests attention (with respect to the setting of the interrupt enable flags, see CIU_CommIEn and CIU_DivIEn registers).
6	CRCOk	Set to logic 1, the CRC result is zero. For data transmission and reception the bit CRCOk is undefined (use CRCErr in CIU_Error register). CRCok indicates the status of the CRC coprocessor, during calculation the value changes to logic level 0, when the calculation is done correctly, the value changes to logic level 1.
5	CRCReady	Set to logic 1, when the CRC calculation has finished. This bit is only valid for the CRC co-processor calculation using the CalcCRC command.
4	CIU_IRQ_0	This bit shows, if any CIU_IRQ_0 source requests attention (with respect to the setting of the interrupt enable flags, see CIU_CommIEn and CIU_DivIEn registers).
3	TRunning	Set to logic 1, the CIU_timer is running, e.g. the CIU_timer will decrement the CIU_TCounterVal_lo with the next timer clock. **Note:** In the gated mode TRunning is set to logic 1, when the CIU_timer is enabled by the register bits. This bit is not influenced by the gated signal.
2	RFOn	Set to logic 1, if an external RF field is detected. This bit does not store the state of the RF field.
1	HiAlert	Set to logic 1, when the number of bytes stored in the FIFO buffer fulfils the following equation: $HiAlert = (64 - FIFOLength) \leq WaterLevel$ Example: $FIFOLenght = 60, WaterLevel = 4 \rightarrow HiAlert = 1$ $FIFOLenght = 59, WaterLevel = 4 \rightarrow HiAlert = 0$
0	LoAlert	Set to logic 1, when the number of bytes stored in the FIFO buffer fulfills the following equation: $LoAlert = FIFOLength \leq WaterLevel$ Example: $FIFOLenght = 4, WaterLevel = 4 \rightarrow LoAlert = 1$ $FIFOLenght = 5, WaterLevel = 4 \rightarrow LoAlert = 0$

All information provided in this document is subject to legal disclaimers.

© NXP B.V. 2017. All rights reserved.

8.6.23.10 CIU_Status2 register (E9h or 6338h)

Contain status flags of the receiver, transmitter and Data Mode Detector.

Table 193. CIU_Status2 register (address E9h or 6338h) bit allocation

Bit	7	6	5	4	3	2	1	0
Symbol	TempSensClear	-	RFFreqOK	TgActivated	MFCrypto1On	ModemState[2:0]		
Reset	0	0	0	0	0	0	0	0
Access	R/W	R	R	DY	DY	R	R	R

Table 194. Description of CIU_Status2 bits

Bit	Symbol	Description
7	TempSensClear	Set to logic 1, this bit clears the temperature error, if the temperature is below the alarm limit of 125 °C.
6	-	Reserved
5	RFFreqOK	Indicates if the frequency detected at the RX pin is in the range of 13.56 MHz. Set to logic 1, if the frequency at the RX pin is in the range 12 MHz < RX pin frequency < 15 MHz. **Note:** The value of RFFreqOK is not defined if the external RF frequency is in the range of 9 to 12 MHz or in the range of 15 to 19 MHz.
4	TgActivated	Set to logic 1 if the Select command is received correctly or if the Polling command was answered. **Note:** This bit can only be set during the AutoColl command in Passive Communication mode or Card operating modes. **Note:** This bit is set to logic level 0 automatically by switching off the RF field.
3	MFCrypto1On	Set to logic level 1, MIFARE Crypto1 unit is switched on and therefore all data communication with the card is encrypted. This bit can only be set to logic 1 by a successful execution of the MFAuthent command. This is only valid in Reader/Writer mode for MIFARE 1 KB or MIFARE 4 KB emulation cards. This bit shall be set to logic level 0 by firmware.
2 to 0	ModemState[2:0]	ModemState shows the state of the transmitter and receiver state machines. **Value** **Description** 000 Idle 001 Wait for StartSend in CIU_BitFraming register 010 TxWait: Wait until RF field is present, if TxWaitRF is set to logic 1. The minimum time for TxWait is defined by the TxWait register. 011 Transmitting 100 RxWait: Wait until RF field is present, if the bit RxWaitRF is set to logic 1. The minimum time for RxWait is defined by the RxWait register 101 Wait for data 110 Receiving

All information provided in this document is subject to legal disclaimers.

© NXP B.V. 2017. All rights reserved.

8.6.23.11 CIU_FIFOData register (EAh or 6339h)

In- and output of 64 byte FIFO buffer.

Table 195. CIU_FIFOData register (address EAh or 6339h) bit allocation

Bit	7	6	5	4	3	2	1	0
Symbol	FIFOData[7:0]							
Reset	X	X	X	X	X	X	X	X
Access	DY	DY	DY	DY	DY	DY	DY	DY

Table 196. Description of CIU_FIFOData bits

Bit	Symbol	Description
7 to 0	FIFOData[7:0]	Data input and output port for the internal 64 bytes FIFO buffer. The FIFO buffer acts as parallel in/parallel out converter for all data stream in- and outputs

8.6.23.12 CIU_FIFOLevel register (EBh or 633Ah)

Indicates the number of bytes stored in the FIFO.

Table 197. CIU_FIFOLevel register (address EBh or 633Ah) bit allocation

Bit	7	6	5	4	3	2	1	0
Symbol	FlushBuffer	FIFOLevel[6:0]						
Reset	0	0	0	0	0	0	0	0
Access	W	R	R	R	R	R	R	R

Table 198. Description of CIU_FIFOLevel bits

Bit	Symbol	Description
7	FlushBuffer	Set to logic 1, this bit clears the internal FIFO-buffer's read- and write-pointer and the bit BufferOvfl in the CIU_Error register immediately. Reading this bit will always return logic level 0.
6 to 0	FIFOLevel[6:0]	Indicates the number of bytes stored in the FIFO buffer. Writing to the CIU_FIFOData Register increments, reading decrements FIFOLevel.

All information provided in this document is subject to legal disclaimers.

© NXP B.V. 2017. All rights reserved.

8.6.23.13 CIU_WaterLevel register (ECh or 633Bh)

Defines the thresholds for FIFO under- and overflow warning.

Table 199. CIU_WaterLevel register (address ECh or 633Bh) bit allocation

Bit	7	6	5	4	3	2	1	0
Symbol	-	-	WaterLevel[6:0]					
Reset	0	0	0	0	1	0	0	0
Access	R	R	R/W	R/W	R/W	R/W	R/W	R/W

Table 200. Description of CIU_WaterLevel bits

Bit	Symbol	Description
7 to 6	-	Reserved.
5 to 0	WaterLevel[5:0]	This register defines a threshold to indicate a FIFO buffer over- or underflow to the 80C51: The HiAlert bit in CIU_Status1 register is set to logic 1, if the remaining number of bytes in the FIFO-buffer space is equal or less than the defined WaterLevel[5:0] bits. The LoAlert bit in CIU_Status1 register is set to logic 1, if equal or less than WaterLevel[5:0] bits are in the FIFO. **Remark:** For the calculation of the HiAlert and LoAlert see Table 192 on page 161.

8.6.23.14 CIU_Control register (EDh or 633Ch)

Contains miscellaneous control bits.

Table 201. CIU_Control register (address EDh or 633Ch) bit allocation

Bit	7	6	5	4	3	2	1	0
Symbol	TStopNow	TStartNow	WrNFCIP-1IDtoFIFO	Initiator	-	RxLastBits[2:0]		
Reset	0	0	0	0	0	0	0	0
Access	W	W	DY	R/W	R	R	R	R

Table 202. Description of CIU_Control bits

Bit	Symbol	Description
7	TStopNow	Set to logic 1, the timer stops immediately. Reading this bit will always return logic level 0.
6	TStartNow	Set to logic 1, the timer starts immediately. Reading this bit will always return logic level 0.
5	WrNFCIP-1IDtoFIFO	Set to logic 1, the internal stored NFCID3 (10 bytes) is copied into the FIFO. Afterwards the bit is set to logic level 0 automatically.
4	Initiator	Set to logic 1, the PN533 acts as Initiator or Reader/Writer, otherwise it acts as Target. or a Card.
3	-	Reserved.
2 to 0	RxLastBits[2:0]	Shows the number of valid bits in the last received byte. If set to 000b, the whole byte is valid.

All information provided in this document is subject to legal disclaimers.

© NXP B.V. 2017. All rights reserved.

8.6.23.15 CIU_BitFraming register (EEh or 633Dh)

Adjustments for bit oriented frames.

Table 203. CIU_BitFraming register (address EEh or 633Dh) bit allocation

Bit	7	6	5	4	3	2	1	0
Symbol	StartSend	RxAlign[2:0]			-	TxLastBits[2:0]		
Reset	0	0	0	0	0	0	0	0
Access	W	R/W	R/W	R/W	R	R/W	R/W	R/W

Table 204. Description of CIU_BitFraming bits

Bit	Symbol	Description
7	StartSend	Set to logic 1, the transmission of data starts. This bit is only valid in combination with the Transceive command.
6 to 4	RxAlign[2:0]	Used for reception of bit oriented frames: RxAlign[2:0] defines the bit position for the first received bit to be stored in the FIFO. Further received bits are stored in the following bit positions. **Example:** RxAlign[2:0] = 0: The LSB of the received bit is stored at bit 0, the second received bit is stored at bit position 1. RxAlign[2:0] = 1: The LSB of the received bit is stored at bit 1, the second received bit is stored at bit position 2 RxAlign[2:0] = 7: The LSB of the received bit is stored at bit 7, the second received bit is stored in the following byte at bit position 0. These bits shall only be used for bitwise anticollision at 106 kbit/s in Passive Communication or Reader/Writer mode. In all other modes it shall be set to logic level 0.
3	-	Reserved.
2 to 0	TxLastBits[2:0]	Used for transmission of bit oriented frames: TxLastBits defines the number of bits of the last byte that shall be transmitted. A 000b indicates that all bits of the last byte shall be transmitted.

All information provided in this document is subject to legal disclaimers.

© NXP B.V. 2017. All rights reserved.

8.6.23.16 CIU_Coll register (EFh or 633Eh)

Defines the first bit collision detected on the RF interface.

Table 205. CIU_Coll register (address EFh or 633Eh) bit allocation

Bit	7	6	5	4	3	2	1	0
Symbol	ValuesAfterColl	-	CollPosNotValid	CollPos				
Reset	1	0	1	X	X	X	X	X
Access	R/W	R	R	R	R	R	R	R

Table 206. Description of CIU_Coll bits

Bit	Symbol	Description
7	ValuesAfterColl	If this bit is set to logic 0, all receiving bits will be cleared after a collision. This bit shall only be used during bitwise anticollision at 106 kbit/s, otherwise it shall be set to logic 1.
6	-	Reserved
5	CollPosNotValid	Set to logic 1, if no Collision is detected or the Position of the collision is out of range of the CollPos[4:0] bits. This bit shall only be interpreted in Passive Communication mode at 106 kbit/s or ISO/IEC 14443A/MIFARE Reader/Writer mode.
4 to 0	CollPos	These bits show the bit position of the first detected collision in a received frame, only data bits are interpreted. **Example:** 00h indicates a bit collision in the 32nd bit. 01h indicates a bit collision in the 1st bit 08h indicates a bit collision in the 8th bit This bit shall only be interpreted in Passive Communication mode at 106 kbit/s or ISO/IEC 14443A/MIFARE Reader/Writer mode if CollPosNotValid is set to logic 0.

All information provided in this document is subject to legal disclaimers.

© NXP B.V. 2017. All rights reserved.

8.6.23.17 CIU_Mode register (6301h)

Defines general modes for transmitting and receiving.

Table 207. CIU_Mode register (address 6301h) bit allocation

Bit	7	6	5	4	3	2	1	0
Symbol	MSBFirst	DetectSync	TXWaitRF	RxWaitRF	PolSigin	ModeDet Off	CRCPreset [1:0]	
Reset	0	0	1	1	1	0	1	1
Access	R/W	R/W	R/W	R/W	R/W	R/W	R/W	R/W

Table 208. Description of CIU_Mode bits

Bit	Symbol	Description
7	MSBFirst	Set to logic 1, the CRC co-processor calculates the CRC with MSB first. The bit order in the registers CRCResultMSB and the CIU_CRCResultLSB is reversed. **Note:** During RF communication this bit is ignored.
6	DetectSync	If set to logic 1, the CIU waits for the F0h byte before the receiver is activated and F0h byte is added as a Sync-byte for transmission. This bit is only valid for 106 kbit/s during NFCIP-1 data exchange protocol. In all other modes it shall be set to logic 0.
5	TXWaitRF	Set to logic 1 the transmitter in Reader/Writer or Initiator mode for NFCIP-1 can only be started, if an own RF field is generated (i.e. Tx1RFEn and/or Tx2RFen is set to logic level 1).
4	RxWaitRF	Set to logic 1, the counter for RxWait starts only, if an external RF field is detected in Target mode for NFCIP-1 or in Card Operating mode
3	PolSigin	PolSigin defines the polarity of the SIGIN pin. Set to logic 1, the polarity of SIGIN pin is active high. Set to logic 0 the polarity of SIGIN pin is active low. **Note:** The internal envelope signal is coded active low. **Note:** Changing this bit will generate a SiginActIrq event.
2	ModeDetOff	Set to logic 1, the internal Data Mode Detector is switched off. **Note:** The Data Mode Detector is only active during the AutoColl command.
1 to 0	CRCPreset[1:0]	Defines the preset value for the CRC co-processor for the CalCRC command. Note: During any communication, the preset values is selected automatically according to the mode definition in the CIU_RxMode and CIU_TxMode registers. **Value** — **Description** 00 — 00 00 01 — 63 63 10 — A6 71 11 — FF FF

All information provided in this document is subject to legal disclaimers.

© NXP B.V. 2017. All rights reserved.

8.6.23.18 CIU_TxMode register (6302h)

Defines the transmission data rate and framing during transmission.

Table 209. CIU_TxMode register (address 6302h) bit allocation

Bit	7	6	5	4	3	2	1	0
Symbol	TxCRCEn	TxSpeed[2:0]			InvMod	TxMix	TxFraming[1:0]	
Reset	0	0	0	0	0	0	0	0
Access	R/W	DY	DY	DY	R/W	R/W	DY	DY

Table 210. Description of CIU_TxMode bits

Bit	Symbol	Description
7	TxCRCEn	Set to logic 1, this bit enables the CRC generation during data transmission. **Note:** This bit shall only set to logic 0 at 106 kbit/s.
6 to 4	TxSpeed[2:0]	Defines bit rate while data transmission. **Value** — **Description** 000 — 106 kbit/s 001 — 212 kbit/s 010 — 424 kbit/s 011 — 848 kbit/s 100 — 1696 kbit/s 101 — Reserved 110 - 111 — Reserved **Note:** The bit coding for transfer speeds above 424 kbit/s is equivalent to the bit coding of the Active Communication mode of the 424 kbit/s of the ISO/IEC18092 / ECMA340.
3	InvMod	Set to logic 1, the modulation for transmitting data is inverted.
2	TxMix	Set to logic 1, the signal at SIGIN is mixed with the internal coder. See Section 8.6.12 “Serial data switch” on page 131.
1 to 0	TxFraming[1:0]	Defines the framing used for data transmission. **Value** — **Description** 00 — ISO/IEC 14443A/MIFARE and Passive Communication mode 106 kbit/s 01 — Active Communication mode 10 — FeliCa and Passive Communication mode at 212 kbit/s and 424 kbit/s 11 — ISO/IEC 14443B

All information provided in this document is subject to legal disclaimers.

© NXP B.V. 2017. All rights reserved.

8.6.23.19 CIU_RxMode register (6303h)

Defines the reception data rate and framing during receiving.

Table 211. CIU_RxMode register (address 6303h) bit allocation

Bit	7	6	5	4	3	2	1	0
Symbol	RXCRCEn	RxSpeed[2:0]			RxNoErr	RxMultiple	RxFraming[1:0]	
Reset	0	0	0	0	0	0	0	0
Access	R/W	DY	DY	DY	R/W	R/W	DY	DY

Table 212. Description of CIU_RxMode bits

Bit	Symbol	Description
7	RxCRCEn	Set to logic 1, this bit enables the CRC calculation during reception. The CRC bytes will not be written within the CIU FIFO. **Note:** This bit shall only set to logic level 0 at 106 kbit/s.
6 to 4	RxSpeed[2:0]	Defines the bit rate while data receiving. The analog part of the CIU handles only transfer speeds up to 424 kbit/s internally, the digital part of the CIU handles the higher transfer speeds as well. **Value** — **Description** 000 — 106 kbit/s 001 — 212 kbit/s 010 — 424 kbit/s 011 — 848 kbit/s 100 — 1696 kbit/s 101 — Reserved 110 - 111 — Reserved **Note:** The bit coding for transfer speeds above 424 kbit/s is equivalent to the bit coding of the active communication mode of the 424 kbit/s of the of the ISO/IEC18092 / ECMA340.
3	RxNoErr	If set to logic 1, a not valid received data stream (less than 4 bits received) will be ignored. The receiver will remain active.
2	RxMultiple	Set to logic 0, the receiver is deactivated after receiving a data frame. Set to logic 1, it is possible to receive more than one data frame. This bit is only valid for 212 and 424 kbit/s to handle the Polling command. Having set this bit, the receive and transceive commands will not end automatically. In this case the multiple receiving can only be deactivated by writing the Idle command to the CIU_Command register or clearing this bit by the 80C51. If set to logic 1, at the end of a received data stream an error byte is added to the FIFO. The error byte is a copy of the CIU_Error register.
1 to 0	RxFraming[1:0]	Defines the expected framing for data reception. **Value** — **Description** 00 — ISO/IEC 14443A/MIFARE and Passive Communication mode 106 kbit/s 01 — Active communication mode 10 — FeliCa and Passive Communication mode at 212 kbit/s and 424 kbit/s 11 — ISO/IEC 14443B

All information provided in this document is subject to legal disclaimers.

© NXP B.V. 2017. All rights reserved.

8.6.23.20 CIU_TxControl register (6304h)

Controls the logical behavior of the antenna driver pins TX1 and TX2. See alsoTable 155 on page 124 and Table 156 on page 124.

Table 213. CIU_TxControl register (address 6304h) bit allocation

Bit	7	6	5	4	3	2	1	0
Symbol	InvTx2 RFon	InvTx1 RFon	InvTx2 RFoff	InvTx1 RFoff	Tx2 CW	CheckRF	Tx2 RFEn	Tx1 RFEn
Reset	1	0	0	0	0	0	0	0
Access	R/W	R/W	R/W	R/W	R/W	W	R/W	R/W

Table 214. Description of CIU_TxControl bits

Bit	Symbol	Description
7	InvTx2RFon	Set to logic1 and Tx2RFEn set to logic level 1, TX2 output signal is inverted.
6	InvTx1RFon	Set to logic1 and Tx1RFEn set to logic level 1, TX1 output signal is inverted.
5	InvTx2RFoff	Set to logic1 and Tx2RFEn set to logic level 0, TX2 output signal is inverted.
4	InvTx1RFoff	Set to logic1 and Tx1RFEn set to logic level 0, TX1 output signal is inverted.
3	Tx2CW	Set to logic 1, the output signal on pin TX2 will deliver continuously the un-modulated 13.56 MHz energy carrier. Set to logic 0, Tx2CW is enabled to modulate of the 13.56 MHz energy carrier.
2	CheckRF	Set to logic 1, Tx2RFEn and Tx1RFEn can not be set if an external RF field is detected. Only valid when using in combination with Tx2RFAutoEn and TX1RFAutoEn bits in CIU_TxAuto register.
1	Tx2RFEn	Set to logic 1, the output signal on pin TX2 will deliver the 13.56 MHz energy carrier modulated by the transmission data.
0	Tx1RFEn	Set to logic 1, the output signal on pin TX1 will deliver the 13.56 MHz energy carrier modulated by the transmission data.

All information provided in this document is subject to legal disclaimers.

© NXP B.V. 2017. All rights reserved.

8.6.23.21 CIU_TxAuto register (6305h)

Controls the setting of the antenna driver.

Table 215. CIU_TxAuto register (address 6305h) bit allocation

Bit	7	6	5	4	3	2	1	0
Symbol	Auto RFOFF	Force 100ASK	AutoWakeUp	-	CAOn	InitialRFOn	Tx2 RFAutoEn	Tx1 RFAutoEn
Reset	0	0	0	0	0	0	0	0
Access	R/W	R/W	R/W	R	R/W	W	R/W	R/W

Table 216. Description of CIU_TxAuto bits

Bit	Symbol	Description
7	AutoRFOff	Set to logic 1, own RF field is switched off after the last data bit has been transmitted as defined in the NFCIP-1 standard.
6	Force100ASK	Set to logic 1, Force100ASK forces a 100% ASK modulation independent of the setting in CIU_ModGsP register.
5	AutoWakeUp	Set to logic 1, the PN533 in CIU Power-down mode can be woken up by the RF level detector.
4		Reserved
3	CAOn	Set to logic 1, the collision avoidance is activated and internally the value n is set in accordance to the ISO/IEC 18092 / ECMA340 NFCIP-1 standards.
2	InitialRFOn	Set to logic 1, the initial RF collision avoidance is performed and the bit InitialRFOn is set to logic level 0 automatically, if the RF is switched ON. **Note:** The driver(s) which should be switched on, have to enabled by Tx2RFAutoEn and/or Tx1RFAutoEn bits. **Note:** If the own RF field is already ON when the bit InitialRFOn is set, it is not set to logic level 0.
1	Tx2RFAutoEn	Set to logic 1, RF is switched on at TX2 (i.e. Tx2RFEn is set to logic level 1) after the external RF field is switched off according to the time TADT. If the InitialRFOn and Tx2RFAutoEn bits are set to logic 1, RF is switched on at TX2 if no external RF field is detected during the time T_{IDT}. **Note:** The times T_{ADT} and T_{IDT} are in accordance to the ISO/IEC 18092/ ECMA340 NFCIP-1 standards.
0	Tx1RFAutoEn	Set to logic 1, RF is switched on at TX1(i.e. Tx1RFEn is set to logic level 1) after the external RF field is switched off according to the time TADT. If the InitialRFOn and Tx1RFAutoEn bits are set to logic 1, RF is switched on at TX1 if no external RF field is detected during the time T_{IDT}. **Note:** The times T_{ADT} and T_{IDT} are in accordance to the ISO/IEC 18092/ ECMA340 NFCIP-1 standards.

All information provided in this document is subject to legal disclaimers.

© NXP B.V. 2017. All rights reserved.

8.6.23.22 CIU_TxSel register (6306h)

Selects the sources for the analogue transmitter part

Table 217. CIU_TxSel register (address 6306h) bit allocation

Bit	7	6	5	4	3	2	1	0
Symbol	LoadModSel[1:0]		DriverSel[1:0]		SigOutSel[3:0]			
Reset	0	0	0	1	0	0	0	0
Access	R/W	R/W	R/W	R/W	R/W	R/W	R/W	R/W

Table 218. Description of CIU_TxSel bits

Bit	Symbol	Description	
7 to 6	LoadModSel[1:0]	Selects the signal to be output on LOADMOD	
		Value	**Description**
		00	Tristate
		01	Modulation signal (envelope) from the internal coder
		10	Modulation signal (envelope) from SIGIN
		11	Test signal defined by LoadModtest in register CIU_TestSel1
5 to 4	DriverSel[1:0]	Selects the signals to be output on Tx1 and Tx2.	
		Value	**Description**
		00	Tristate
		01	Modulation signal (envelope) from the internal coder
		10	Modulation signal (envelope) from SIGIN
		11	HIGH
		Note: The HIGH level depends on the setting of InvTx1RFON/InvTx1RFOff and InvTx2RFON/InvTx2RFOff.	
3 to 0	SigOutSel[3:0]	Select the signal to be output on SIGOUT	
		0000	Tristate
		0001	Low
		0010	High
		0011	Test bus signal as defined by TestBusBitSel in CIU_TestSel1.
		0100	Modulation signal (envelope) from the internal coder
		0101	Serial data stream to be transmitted
		0110	Output signal of the receiver circuit (card modulation signal regenerated and delayed). This signal is used as data output signal for secure IC interface connection using 3 lines. **Note:** To have a valid signal the CIU has to be set to the receiving mode by either the Transceive or Receive command. The RxMultiple bit can be used to keep the CIU in receiving mode. **Note:** Do not use this setting in ISO/IEC 14443A/MIFARE mode. Data collisions will not be transmitted on SIGOUT when using Manchester coding.
		0111	Serial data stream received. **Note:** Do not use this setting in ISO/IEC 14443A/MIFARE mode. Miller coding parameters as the bitlength can vary

All information provided in this document is subject to legal disclaimers.

© NXP B.V. 2017. All rights reserved.

Table 218. Description of CIU_TxSel bits *...continued*

Bit	Symbol	Description	
		1000-1011	FeliCa secure IC modulation 1000 RX* 1001 TX 1010 Demodulator comparator output 1011 Reserved
			Note: * To have a valid signal the CIU has to be set to the receiving mode by either the Transceive or Receive commands. The bit RxMultiple can be used to keep the CIU in receiving mode
		1000-1011	MIFARE secure IC modulation 1100 RX* with RF carrier 1101 TX with RF carrier 1110 RX with RF carrier unfiltered 1111 RX envelope unfiltered **Note:** * To have a valid signal the CIU has to be set to the receiving mode by either the Transceive or Receive commands. The bit RxMultiple can be used to keep the CIU in receiving mode

8.6.23.23 CIU_RxSel register (6307h)

Selects internal receiver settings.

Table 219. CIU_RxSel register (address 6307h) bit allocation

Bit	7	6	5	4	3	2	1	0
Symbol	UartSel[1:0]		RxWait[5:0]					
Reset	1	0	0	0	0	1	0	0
Access	R/W	R/W	R/W	R/W	R/W	R/W	R/W	R/W

Table 220. Description of CIU_RxSel bits

Bit	Symbol	Description	
7 to 6	UartSel[1:0]	Selects the input of the digital part (CL UART) of the CIU	
		Value	**Description**
		00	Constant Low
		01	Envelope signal at SIGIN
		10	Modulation signal from the internal analog part
		11	Modulation signal from SIGIN pin. Only valid for transfer speeds above 424 kbit/s
5 to 0	RxWait[5:0]	After data transmission, the activation of the receiver is delayed for RxWait bit-clocks. During this 'frame guard time' any signal at pin Rx is ignored. This parameter is ignored by the Receive command. All other commands (e.g. Transceive, Autocoll, MFAuthent) use this parameter. Depending on the mode of the CIU, the counter starts differently. In Passive Communication mode the counters starts with the last modulation of the transmitted data stream. In Active Communication mode the counter starts immediately after the external RF field is switched on.	

All information provided in this document is subject to legal disclaimers.

© NXP B.V. 2017. All rights reserved.

8.6.23.24 CIU_RxThreshold register (6308h)

Selects thresholds for the bit decoder.

Table 221. CIU_RxThreshold register (address 6308h) bit allocation

Bit	7	6	5	4	3	2	1	0
Symbol	MinLevel[3:0]				-	Collevel[2:0]		
Reset	1	0	0	0	0	1	0	0
Access	R/W	R/W	R/W	R/W	R	R/W	R/W	R/W

Table 222. Description of CIU_RxThreshold bits

Bit	Symbol	Description
7 to 4	MinLevel[3:0]	Defines the minimum signal strength at the decoder input that shall be accepted. If the signal strength is below this level, it is not evaluated.
3	-	Reserved
2 to 0	Collevel[2:0]	Defines the minimum signal strength at the decoder input that has to be reached by the weaker half-bit of the Manchester-coded signal to generate a bit-collision relatively to the amplitude of the stronger half-bit.

8.6.23.25 CIU_Demod register (6309h)

Defines demodulator settings.

Table 223. CIU_Demod register (address 6309h) bit allocation

Bit	7	6	5	4	3	2	1	0
Symbol	AddIQ[1:0]		FixIQ	-	TauRcv[1:0]		TauSync[1:0]	
Reset	0	1	0	0	1	1	0	1
Access	R/W	R/W	R/W	R	R/W	R/W	R/W	R/W

Table 224. Description of CIU_Demod bits

Bit	Symbol	Description
7 to 6	AddIQ[1:0]	Defines the use of I and Q channel during reception. **Note:** FixIQ has to be set to logic 0 to enable the following settings. **Value** — **Description** 00 — Select the stronger channel 01 — Select the stronger and freeze the selected during communication 10 — Combines the I and Q channel 11 — RFU
5	FixIQ	If set to logic 1 and AddIQ[0] is set to logic level 0, the reception is fixed to I channel. If set to logic 1 and AddIQ[0] is set to logic level 1, the reception is fixed to Q channel.
4	-	Reserved
3 to 2	TauRcv[1:0]	Changes time-constant of internal PLL during data receiving. **Note:** If set to 00h, the PLL is frozen during data receiving.
1 to 0	TauSync[1:0]	Changes time-constant of internal PLL during burst (out of data reception)

All information provided in this document is subject to legal disclaimers.

© NXP B.V. 2017. All rights reserved.

8.6.23.26 CIU_FelNFC1 register (630Ah)

Defines the length of the FeliCa Sync bytes and the minimum length of the received frame.

Table 225. CIU_FelNFC1 register (address 630Ah) bit allocation

Bit	7	6	5	4	3	2	1	0
Symbol	FelSyncLen[1:0]		DataLenMin[5:0]					
Reset	0	0	0	0	0	0	0	0
Access	R/W	R/W	R/W	R/W	R/W	R/W	R/W	R/W

Table 226. Description of CIU_FelNFC1 bits

Bit	Symbol	Description
7 to 6	FelSyncLen[1:0]]	Defines the length of the Sync bytes. **Value** — **Description** 00 — B2 4D 01 — 00 B2 4D 10 — 00 00 B2 4D 11 — 00 00 00 B2 4D
5 to 0	DataLenMin[5:0]	These bits define the minimum length of the accepted frame length. $DataLenMin \times 4 \leq DataPacketLenght$ This parameter is ignored at 106 kbit/s if the DetectSync bit in CIU_Mode register is set to logic 0. If a received frame is shorter as the defined DataLenMin value, the frame will be ignored.

All information provided in this document is subject to legal disclaimers.

© NXP B.V. 2017. All rights reserved.

8.6.23.27 CIU_FelNFC2 register (630Bh)

Defines the maximum length of the received frame.

Table 227. CIU_FelNFC2 register (address 630Bh) bit allocation

Bit	7	6	5	4	3	2	1	0
Symbol	WaitForSelected	ShortTimeSlot	DataLenMax[5:0]					
Reset	0	0	0	0	0	0	0	0
Access	R/W	R/W	R/W	R/W	R/W	R/W	R/W	R/W

Table 228. Description of CIU_FelNFC2 bits

Bit	Symbol	Description
7	WaitForSelected	Set to logic 1, the AutoColl command is automatically ended only when: 1. A valid command has been received after performing a valid Select procedure according to ISO/IEC 14443A. 2. A valid command has been received after performing a valid Polling procedure according to the FeliCa specification. **Note:** If this bit is set, no Active Communication is possible. **Note:** Setting this bit reduces the 80C51 interaction in case of a communication to another device in the same RF field during Passive Communication mode.
6	ShortTimeSlot	Defines the time slot length for Active Communication mode at 424 kbit/s. Set to logic 1 a short time slot is used (half of the timeslot at 212 kbit/s). Set to logic 0 a long timeslot is used (equal to the timeslot for 212 kbit/s).
5 to 0	DataLenMax[5:0]	These bits define the maximum length of the accepted frame length: $DataLenMax \times 4 \geq DataPacketLenght$ **Note:** If set to logic 0 the maximum data length is 256 bytes. This parameter is ignored at 106 kbit/s if the bit DetectSync in register CIU_Mode is set to logic 0. If a received frame is larger as the defined DataLenMax value, the frame will be ignored.

All information provided in this document is subject to legal disclaimers.

© NXP B.V. 2017. All rights reserved.

8.6.23.28 CIU_MifNFC register (630Ch)

Defines ISO/IEC 14443A/MIFARE/NFC specific settings in target or card operating mode.

Table 229. CIU_MifNFC register (address 630Ch) bit allocation

Bit	7	6	5	4	3	2	1	0
Symbol	SensMiller[2:0]			TauMiller[1:0]		MFHalted	TxWait[1:0]	
Reset	0	1	1	0	0	0	1	0
Access	R/W	R/W	R/W	R/W	R/W	DY	R/W	R/W

Table 230. Description of CIU_MifNFC bits

Bit	Symbol	Description
7 to 5	SensMiller[2:0]	This bit defines the sensitivity of the Miller decoder.
4 to 3	TauMiller[1:0]	This bit defines the time constant of the Miller decoder.
2	MFHalted	Set to logic 1, this bit indicates that the CIU is set to HALT mode in Card Operating mode at 106 kbit/s. This bit is either set by the 80C51 or by the internal state machine and indicates that only the code 52h is accepted as a Request command. This bit is automatically set to logic level 0 by RF reset.
1 to 0	TxWait[1:0]	In combination with TxBitPhase[6:0] in CIU_TxBitPhase register, defines the additional response time for the target at 106 kbit/s in Passive Communication mode and during the AutoColl command. See CIU_TxBitPhase register.

All information provided in this document is subject to legal disclaimers.

© NXP B.V. 2017. All rights reserved.

8.6.23.29 CIU_ManualRCV register (630Dh)

Allows manual fine tuning of the internal receiver.

IMPORTANT NOTE: For standard application it is not recommended to change this register settings.

Table 231. CIU_ManualRCV register (address 630Dh) bit allocation

Bit	7	6	5	4	3	2	1	0
Symbol	-	FastFilt MF_SO	Delay MF_SO	ParityDisable	LargeBWPLL	ManualHPCF	HPCF[1:0]	
Reset	0	0	0	0	0	0	0	0
Access	R	R/W	R/W	R/W	R/W	R/W	R/W	R/W

Table 232. Description of CIU_ManualRCV bits

Bit	Symbol	Description
7	-	Reserved
6	FastFiltMF_SO	If this bit is set to logic 1, the internal filter for the Miller-Delay circuit is set to Fast-Mode **Note:** This bit should only be set to logic 1, if the Miller pauses length expected are less than 400 ns. At 106 kbit/s, the Miller pauses duration is around 3 μs.
5	DelayMF_SO	If this bit is set to logic 1, when SigoutSel=1100b (register 6306h), the Signal at SIGOUT-pin is delayed according the delay defined by TxBitPhase[6:0] (register 6315h) and TxWait bits (register 630Ch). **Note:** In ISO/IEC 14443A/MIFARE Card MIFARE 1 KB or MIFARE 4 KB emulation (Virtual Card) mode (DriverSel = 10b and SigoutSel=1110b), the Signal at SIGIN must then be 128 /fc faster compared to the ISO/IEC 14443A restrictions on the RF-Field for the Frame Delay Time. **Note:** This delay shall only be activated for setting bits SigOutSel to (1110b) or (1111b) in register CIU_TxSel. If this bit is set to logic 0, the SIGOUT-pin delay is not adjustable. **Note:** In ISO/IEC 14443A/MIFARE card 1 KB or MIFARE 4 KB emulation (Virtual Card) mode (DriverSel = 10b and SigoutSel=1110b), the ISO/IEC 14443A restrictions on the RF-Field for the Frame Delay Time should be adjusted on the secure IC side
4	ParityDisable	If this bit is set to logic 1, the generation of the Parity bit for transmission and the parity check for receiving is switched off. The received parity bit is handled like a data bit.

All information provided in this document is subject to legal disclaimers.

© NXP B.V. 2017. All rights reserved.

Table 232. Description of CIU_ManualRCV bits *…continued*

Bit	Symbol	Description
3	LargeBWPLL	Set to logic 1, the bandwidth of the internal PLL for clock recovery is extended. **Note:** As the bandwidth is extended, the PLL filtering effect is weaker and the performance of the communication may be affected.
2	ManualHPCF	Set to logic 0, the HPCF[1:0] bits are ignored and the HPCF[1:0] settings are adapted automatically to the receiving mode.
1 to 0	HPCF[1:0]	Selects the High Pass Corner Frequency (HPCF) of the filter in the internal receiver chain **Value** — **Description** 00 — For signals with frequency spectrum down to 106 kHz 01 — For signals with frequency spectrum down to 212 kHz 10 — For signals with frequency spectrum down to 424 kHz 11 — For signals with frequency spectrum down to 848 kHz

All information provided in this document is subject to legal disclaimers.

© NXP B.V. 2017. All rights reserved.

8.6.23.30 CIU_TypeB register (630Eh)

Selects the specific settings for the ISO/IEC 14443B

Table 233. CIU_TypeB register (address 630Eh) bit allocation

Bit	7	6	5	4	3	2	1	0
Symbol	Rx SOFReq	Rx EOFReq	-	EOFSOF Width	NoTx SOF	NoTx EOF	TxEGT[1:0]	
Reset	0	0	0	0	0	0	0	0
Access	R/W	R/W	R	R/W	R/W	R/W	R/W	R/W

Table 234. Description of CIU_TypeB bits

Bit	Symbol	Description
7	RxSOFReq	If this bit is set to logic 1, the SOF is required. A datastream starting without SOF is ignored. If this bit is set to logic level 0, a datastream with and without SOF is accepted. The SOF will be removed and not written into the FIFO.
6	RxEOFReq	If this bit is set to logic 1, the EOF is required. A datastream ending without EOF will generate a protocol error: ProtocollErr in the CIU_Error register will be set to logic level 1. If this bit is set to logic level 0, a datastream with and without EOF is accepted. The EOF will be removed and not written into the FIFO.
5	-	Reserved.
4	EOFSOFWidth	If this bit is set to logic 1, the SOF and EOF will have the maximum length defined in the ISO/IEC 14443B. If this bit is set to logic level 0, the SOF and EOF will have the minimum length defined in the ISO/IEC 14443B.
3	NoTxSOF	If this bit is set to logic 1, the generation of the SOF is suppressed.
2	NoTxEOF	If this bit is set to logic 1, the generation of the EOF is suppressed.
1 to 0	TxEGT[1:0]	These bits define the length of the EGT, as defined in the ISO/IEC 14443B **Value** — **Description** 00 — 0 bit 01 — 1 bit 10 — 2 bits 11 — 3 bits

All information provided in this document is subject to legal disclaimers.

© NXP B.V. 2017. All rights reserved.

8.6.23.31 CIU_CRCResultMSB register (6311h)

Shows the actual MSB values of the CRC calculation.

Note: The CRC is split into two 8-bit registers. See also the CIU_CRCResultLSB register.

Note: Setting the bit MSBFirst in CIU_Mode register reverses the bit order, the byte order is not changed

Table 235. CIU_CRCResultMSB register (address 6311h) bit allocation

Bit	7	6	5	4	3	2	1	0
Symbol	CRCResultMSB[7:0]							
Reset	1	1	1	1	1	1	1	1
Access	R	R	R	R	R	R	R	R

Table 236. Description of CIU_CRCResultMSB bits

Bit	Symbol	Description
7 to 0	CRCResultMSB[7:0]	This register shows the actual value of the most significant byte of the CRC calculation. It is valid only if CRCReady bit in CIU_Status1 register is set to logic 1.

8.6.23.32 CIU_CRCResultLSB register (6312h)

Shows the actual LSB values of the CRC calculation.

Note: The CRC is split into two 8-bit registers. See also the CIU_CRCResultMSB register.

Note: Setting the bit MSBFirst in CIU_Mode register reverses the bit order, the byte order is not changed

Table 237. CIU_CRCResultLSB register (address 6312h) bit allocation

Bit	7	6	5	4	3	2	1	0
Symbol	CRCResultLSB[7:0]							
Reset	1	1	1	1	1	1	1	1
Access	R	R	R	R	R	R	R	R

Table 238. Description of CIU_CRCResultLSB bits

Bit	Symbol	Description
7 to 0	CRCResultLSB[7:0]	This register shows the actual value of the most significant byte of the CRC register. It is valid only if CRCReady bit in CIU_Status1 register is set to logic 1.

All information provided in this document is subject to legal disclaimers.

© NXP B.V. 2017. All rights reserved.

8.6.23.33 CIU_GsNOff register (6313h)

Selects the conductance for the N-driver of the antenna driver pins TX1 and TX2 when there is no RF generated by the PN533.

Table 239. CIU_GsNOff register (address 6313h) bit allocation

Bit	7	6	5	4	3	2	1	0
Symbol	CWGsNOff[3:0]				ModGsNOff[3:0]			
Reset	1	0	0	0	1	0	0	0
Access	R/W	R/W	R/W	R/W	R/W	R/W	R/W	R/W

Table 240. Description of CIU_GsNOff bits

Bit	Symbol	Description
7 to 4	CWGsNOff[3:0]	The value of this register defines the conductance of the output N-driver during the time of no modulation and when there is no RF generated by the PN533 (neither Tx1RFEn nor Tx2RFEn is set to logic level 1). **Note:** The conductance value is binary weighted. **Note:** During CIU Power-down mode, if DriverSel[1:0] is not equal to 01b, CWGsNOff[3] is set to logic level 1. This is not readable in the register. **Note:** The value of the register is only used if no RF is generated by the driver, otherwise the value CWGsNOn in the CIU_GsNOn register is used.
3 to 0	ModGsNOff[3:0]	The value of this register defines the conductance of the output N-driver for the time of modulation and when there is no RF generated by the PN533 (neither Tx1RFEn nor Tx2RFEn is set to logic level 1). This may be used to regulate the modulation index when doing load modulation. **Note:** The conductance value is binary weighted. **Note:** During CIU Power-down, if DriverSel[1:0] is not equal to 01b, ModGsNOff[3] is set to logic level 1. This is not readable in the register. **Note:** The value of the register is only used if no RF is generated by the driver, otherwise the value ModGsNOn in the CIU_GsNOn register is used.

All information provided in this document is subject to legal disclaimers.

© NXP B.V. 2017. All rights reserved.

8.6.23.34 CIU_ModWidth register (6314h)

Controls the setting of the modulation width.

Table 241. CIU_ModWidth register (address 6314h) bit allocation

Bit	7	6	5	4	3	2	1	0
Symbol	ModWidth[7:0]							
Reset	0	0	1	0	0	1	1	0
Access	R/W	R/W	R/W	R/W	R/W	R/W	R/W	R/W

Table 242. Description of CIU_ModWidth bits

Bit	Symbol	Description
7 to 0	ModWidth[7:0]	These bits define the width of the Miller modulation as initiator in Active and Passive Communication mode as multiples of the carrier frequency (ModWidth+1 / fc). The maximum value is half the bit period. Acting as a target in Passive Communication mode at 106 kbit/s or in Card Operating mode for ISO/IEC 14443A/MIFARE these bits are used to change the duty cycle of the subcarrier frequency. Number of cycles with low value: NCLV = (Modwidth modulo 8)+1 Number of cycles with high value: NCHV = 16 - NCLV

All information provided in this document is subject to legal disclaimers.

© NXP B.V. 2017. All rights reserved.

8.6.23.35 CIU_TxBitPhase register (6315h)

Adjust the bit phase at 106 kbit/s during transmission.

Table 243. CIU_TxBitPhase register (address 6315h) bit allocation

Bit	7	6	5	4	3	2	1	0
Symbol	RcvClkChange	TxBitPhase[6:0]						
Reset	1	0	0	0	0	1	1	1
Access	R/W	R/W	R/W	R/W	R/W	R/W	R/W	R/W

Table 244. Description of CIU_TxBitPhase bits

Bit	Symbol	Description
7	RcvClkChange	Set to logic 1, the demodulator's clock is derivated from the external RF field.
6 to 0	TxBitPhase[6:0]	TXBitPhase[6:0] in addition with TxWait bits (register 63 0Ch), define a delay to adjust the bit synchronization during Passive Communication mode at 106 kbit/s and in ISO/IEC 14443A/MIFARE Reader/Writer mode. TxBitphase[6:0] are representing a delay in number of carrier frequency clock cycles. **Note:** The ranges to be used for TxWait[1:0] and TxBitPhase[6:0] are between: TXWait=01b and TxBitPhase = 1Bh (equivalent to an added delay of 20 clock cycles) and TXWait=01b and TxBitPhase = 7Fh (equivalent to an added delay of 120 clock cycles) TxWait=10b and TxBitPhase = 00h (equivalent to an added delay of 121 clock cycles) and TxWait=10b and TxBitPhase = 0Fh (equivalent to an added delay of 136 clock cycles) **Note:** The delay can vary depending of antenna circuits. **Note:** When DriverSel = 01b (the transmitter modulation input is coming from the internal coder), this delay is added to the waiting period before transmitting data in all communication modes. **Note:** When SigoutSel=1110b (CIU_TxSel register), and DelayMF_SO =1b (CIU_ManualRCV register), this delay is added on SIGOUT. **Note:** II the Signal at SIGIN is 128/fc faster compared to the ISO/IEC 14443A restrictions on the RF-Field for the Frame Delay Time, this delay is made so that if the FDT is correct when DriverSel = 01b, the same values of TxWait[1:0] and TxBitPhase[6:0] are also correct for this configuration when DriverSel = 10b (the transmitter modulation input is coming from SIGIN).

All information provided in this document is subject to legal disclaimers.

© NXP B.V. 2017. All rights reserved.

8.6.23.36 CIU_RFCfg register (6316h)

Configures the receiver gain and RF level detector sensitivity.

Table 245. CIU_RFCfg register (address 6316h) bit allocation

Bit	7	6	5	4	3	2	1	0
Symbol	RFLevelAmp	RxGain[2:0]			RFLevel[3:0]			
Reset	0	1	0	0	1	0	0	0
Access	R/W	R/W	R/W	R/W	R/W	R/W	R/W	R/W

Table 246. Description of CIU_RFCfg bits

Bit	Symbol	Description
7	RFLevelAmp	Set to logic 1, this bit activates the RF level detector's amplifier, see Section 8.6.8 "RF level detector" on page 126.
6 to 4	RxGain[2:0]	This register defines the receivers signal voltage gain factor: **Value** / **Description** 000 / 18 dB 001 / 23 dB 010 / 18 dB 011 / 23 dB 100 / 33 dB 101 / 38 dB 110 / 43 dB 111 / 48 dB
3 to 0	RFLevel[3:0]	Defines the sensitivity of the RF level detector, for description see Section 8.6.8 "RF level detector" on page 126.

All information provided in this document is subject to legal disclaimers.

© NXP B.V. 2017. All rights reserved.

8.6.23.37 CIU_GsNOn register (6317h)

Selects the conductance for the N-driver of the antenna driver pins TX1 and TX2 when generating RF.

Table 247. CIU_GsNOn register (address 6317h) bit allocation

Bit	7	6	5	4	3	2	1	0
Symbol	CWGsNOn[3:0]				ModGsNOn[3:0]			
Reset	1	0	0	0	1	0	0	0
Access	R/W	R/W	R/W	R/W	R/W	R/W	R/W	R/W

Table 248. Description of CIU_GsNOn bits

Bit	Symbol	Description
7 to 4	CWGsNOn[3:0]	The value of this register defines the conductance of the output N-driver. during times of no modulation and when the PN533 generates the RF field. This may be used to regulate the output power and subsequently current consumption and operating distance. **Note:** The conductance value is binary weighted. **Note:** During CIU Power-down mode, if DriverSel[1:0] is not equal to 01b, CWGsNOn[3] is set to logic level 1. This is not readable in the register. **Note:** The value of the register is only used if RF is generated by the driver (either Tx1RFEn or Tx2RFEn is set to logic level 1), otherwise the value CWGsNOFF in the register CIU_GsNOff is used.
3 to 0	ModGsNOn[3:0]	The value of this register defines the conductance of the output N-driver for the time of modulation and when the PN533 generates the RF field. This may be used to regulate the modulation index. **Note:** The conductance value is binary weighted. **Note:** During CIU Power-down mode, if DriverSel[1:0] is not equal to 01b, ModGsNOn[3] is set to logic level 1. This is not readable in the register. **Note:** The value of the register is only used if RF is generated by the driver (either Tx1RFEn or Tx2RFEn is set to logic level 1), otherwise the value ModGsNOff in the register CIU_GsNOFF is used.

All information provided in this document is subject to legal disclaimers.

© NXP B.V. 2017. All rights reserved.

8.6.23.38 CIU_CWGsP register (6318h)

Defines the conductance of the P-driver.

Table 249. CIU_CWGsP register (address 6318h) bit allocation

Bit	7	6	5	4	3	2	1	0
Symbol	-	-	CWGsP[5:0]					
Reset	0	0	1	0	0	0	0	0
Access	R	R	R/W	R/W	R/W	R/W	R/W	R/W

Table 250. Description of CIU_CWGsP bits

Bit	Symbol	Description
7 to 6	-	Reserved.
5 to 0	CWGsP[5:0]	The value of this register defines the conductance of the output P-driver, during times of no modulation. This may be used to regulate the output power and subsequently current consumption and operating distance. **Note:** The conductance value is binary weighted. **Note:** During CIU Power-down mode, if DriverSel[1:0] is not equal to 01b, CWGsP[5] is set to logic level 1. This is not readable in the register.

8.6.23.39 CIU_ModGsP register (6319h)

Defines the driver P-output conductance for the time of modulation.

Table 251. CIU_ModGsP register (address 6319h) bit allocation

Bit	7	6	5	4	3	2	1	0
Symbol	-	-	ModGsP[5:0]					
Reset	0	0	1	0	0	0	0	0
Access	R	R	R/W	R/W	R/W	R/W	R/W	R/W

Table 252. Description of CIU_ModGsP bits

Bit	Symbol	Description
7 to 6	-	Reserved.
5 to 0	ModGsP[5:0]	The value of this register defines the conductance of the output P-driver for the time of modulation. This may be used to regulate the modulation index. **Note:** The conductance value is binary weighted. **Note:** During CIU Power-down mode, if DriverSel[1:0] is not equal to 01b, ModGsP[5] is set to logic level 1. This is not readable in the register. **Note:** If Force100ASK in CIU_TxAuto register is set to logic level 1, the ModGsP[5:0] setting has no effect.

All information provided in this document is subject to legal disclaimers.

© NXP B.V. 2017. All rights reserved.

8.6.23.40 CIU_TMode register (631Ah)

Defines settings for the internal timer.

Table 253. CIU_TMode register (address 631Ah) bit allocation

Bit	7	6	5	4	3	2	1	0
Symbol	TAuto	TGated[1:0]		TAutoRestart	TPrescaler_Hi[3:0]			
Reset	0	0	0	0	0	0	0	0
Access	R/W	R/W	R/W	R/W	R/W	R/W	R/W	R/W

Table 254. Description of CIU_TMode bits

Bit	Symbol	Description
7	TAuto	Set to logic 1, the timer starts automatically at the end of the transmission in all communication modes at all speed, or when InitialRFOn (in CIU_TxAuto) is set to logic 1 and the external RF field is switched on. The timer stops immediately after receiving the first data bit if RxMultiple in the CIU_RxMode register is set to logic level 0. If RxMultiple is set to logic 1, the timer never stops. In this case the timer can be stopped by setting the bit TStopNow in register CIU_Control to 1. Set to logic 0 indicates, that the timer is not influenced by the protocol.
6 to 5	TGated[1:0]	The internal timer is running in gated mode. **Note:** In the gated mode, the bit TRunning is logic level 1 when the timer is enabled by the register bits. This bit does not influence the gating signal **Value** — **Description** 00 — No gated mode 01 — Gated by SIGIN 10 — Gated by AUX1 11 — Reserved
4	TAutoRestart	Set to logic 1 the timer automatically restart its count-down from TReloadValue defined within when reaches zero. Set to logic 0 the timer decrements to zero and the bit TimerIRq is set to logic 1.
3 to 0	TPrescaler_Hi[3:0]	Defines higher 4 bits for the TPrescaler. The following formula is used to calculate f_{Timer}: $f_{Timer} = 6{,}78MHz/T_{PreScaler}$ For detailed description see Section 8.6.17 “CIU_timer” on page 140. **Note:** TPreScaler is defined with TPreScaler_Hi[3:0] in this register and TPreScaler_LO[7:0] in CIU_TPrescaler.

All information provided in this document is subject to legal disclaimers.

© NXP B.V. 2017. All rights reserved.

8.6.23.41 CIU_TPrescaler register (631Bh)

Define the LSB of the Timer-Prescaler.

Table 255. CIU_TPrescaler register (address 631Bh) bit allocation

Bit	7	6	5	4	3	2	1	0
Symbol	TPrescaler_LO[7:0]							
Reset	0	0	0	0	0	0	0	0
Access	R/W	R/W	R/W	R/W	R/W	R/W	R/W	R/W

Table 256. Description of CIU_TPrescaler bits

Bit	Symbol	Description
7 to 0	TPrescaler_LO[7:0]	Defines lower 8 bits for TPrescaler. The following formula is used to calculate f_{Timer} $$f_{Timer} = 6{,}78MHz / T_{PreScaler}$$ For detailed description see Section 8.6.17 “CIU_timer” on page 140. Note: The TPreScaler time is defined with TPreScaler_Hi[3:0] in CIU_TMode and TPreScaler_LO[7:0] in this register.

8.6.23.42 CIU_TReload_hi register (631Ch)

Defines the MSB of the 16-bit long timer reload value.

Table 257. CIU_TReloadVal_hi register (address 631Ch) bit allocation

Bit	7	6	5	4	3	2	1	0
Symbol	TReloadVal_Hi[7:0]							
Reset	0	0	0	0	0	0	0	0
Access	R/W	R/W	R/W	R/W	R/W	R/W	R/W	R/W

Table 258. Description of CIU_TReloadVal_hi bits

Bit	Symbol	Description
7 to 0	TReloadVal_Hi[7:0]	Defines the higher 8 bits for the TReloadValue. With a start event the timer loads with the TReloadValue. Changing this register affects the timer only with the next start event. **Note:** The reload value is defined with TReloadVal_Hi[7:0] in this register and TReloadVal_Lo[7:0] in CIU_TReloadVal_lo

All information provided in this document is subject to legal disclaimers.

© NXP B.V. 2017. All rights reserved.

8.6.23.43 CIU_TReloadVal_lo register (631Dh)

Defines the LSB of the 16 bit long timer reload value.

Table 259. CIU_TReload_lo register (address 631Dh) bit allocation

Bit	7	6	5	4	3	2	1	0
Symbol	TReloadVal_Lo[7:0]							
Reset	0	0	0	0	0	0	0	0
Access	R/W	R/W	R/W	R/W	R/W	R/W	R/W	R/W

Table 260. Description of CIU_TReload_lo bits

Bit	Symbol	Description
7 to 0	TReloadVal_Lo[7:0]	Defines the lower 8 bits for the TReloadValue. With a start event the timer loads with the TReloadValue. Changing this register affects the timer only with the next start event. **Note:** The reload value is defined with TReloadVal_Lo[7:0] in this register and TReloadVal_Hi[7:0] in CIU_TReload_Hi.

8.6.23.44 CIU_TCounterVal_hi register (631Eh)

Defines the MSB byte of the current value of the timer.

Table 261. CIU_TCounterVal_hi register (address 631Eh) bit allocation

Bit	7	6	5	4	3	2	1	0
Symbol	TCounterVal_Hi[7:0]							
Reset	x	x	x	x	x	x	x	x
Access	R	R	R	R	R	R	R	R

Table 262. Description of CIU_TCounterVal_hi bits

Bit	Symbol	Description
7 to 0	TCounterVal_Hi[7:0]	MSB of the current value of the timer (Higher 8 bits).

8.6.23.45 Register CIU_TCounterVal_lo (631Fh)

Defines the LSB byte of the current value of the timer.

Table 263. CIU_TCounterVal_lo register (address 631Fh) bit allocation

Bit	7	6	5	4	3	2	1	0
Symbol	TCounterVal_LO[7:0]							
Reset	x	x	x	x	x	x	x	x
Access	R	R	R	R	R	R	R	R

Table 264. Description of CIU_TCounterVal_lo bits

Bit	Symbol	Description
7 to 0	TCounterVal_LO[7:0]	LSB of the current value of the timer (Lower 8 bits).

All information provided in this document is subject to legal disclaimers.

© NXP B.V. 2017. All rights reserved.

8.6.23.46 CIU_TestSel1 register (6321h)

General test signal configuration.

Table 265. CIU_TestSel1 register (address 6321h) bit allocation

Bit	7	6	5	4	3	2	1	0
Symbol	LoadModTst[1:0]		SICclksel[1:0]		SICClkD1	TstBusBitSel[2:0]		
Reset	0	0	0	0	0	0	0	0
Access	R/W	R/W	R/W	R/W	R/W	R/W	R/W	R/W

Table 266. Description of CIU_TestSel1 bits

Bit	Symbol	Description
7 to 6	LoadModTst[1:0]	Defines the test signal for the LOADMOD pin **Note:** The bits LoadModSel in register CIU_TxSel has to be set to logic 1 to enable LoadModTst: **Value** — **Description** 00 — Low 01 — High 10 — RFU 11 — TstBusBit as defined by the TestBusBitSel bit of this register
5 to 4	SICclksel[1:0]	Defines the source for the 13.56 MHz secure IC clock **Value** — **Description** 00 — GND - secure IC clock is switched off 01 — Clock derivated by the internal oscillator 10 — Internal CIU clock 11 — Clock derivated from the RF Field
3	SICClkD1	Set to logic 1, the secure IC clock is delivered to P31 / UART_TX if the observe_ciu bit is set to logic 1.
2 to 0	TstBusBitSel(2:0]	Select the TstBusBit from the test bus.

All information provided in this document is subject to legal disclaimers.

© NXP B.V. 2017. All rights reserved.

8.6.23.47 CIU_TestSel2 register (6322h)

General test signal configuration and PRBS control.

Table 267. CIU_TestSel2 register (address 6322h) bit allocation

Bit	7	6	5	4	3	2	1	0
Symbol	TstBusFlip	PRBS9	PRBS15	TstBusSel[4:0]				
Reset	0	0	0	0	0	0	0	0
Access	R/W	R/W	R/W	R/W	R/W	R/W	R/W	R/W

Table 268. Description of CIU_TestSel2 bits

Bit	Symbol	Description
7	TstBusFlip	If set to logic 1, the internal test bus(D6-D0) is mapped to the external test bus pins by the following order: D4,D3, D2,D6,D5, D0, D1. See Section 8.6.21.2 “CIU test bus” on page 151.
6	PRBS9	Starts and enables the PRBS9 sequence according ITU-TO150. **Note:** All relevant register to transmit data have to be configured before entering PRBS9 mode. **Note:** The data transmission of the defined sequence is started by the Transmit command.
5	PRBS15	Starts and enables the PRBS15 sequence according ITU-TO150. **Note:** All relevant register to transmit data have to be configured before entering PRBS15 mode. **Note:** The data transmission of the defined sequence is started by the Transmit command.
4 to 0	TstBusSel[4:0]	Selects the test bus source. See Section 8.6.21.2 “CIU test bus” on page 151.

8.6.23.48 CIU_TestPinEn register (6323h)

Enable the output drivers for the test pins.

Table 269. CIU_TestPinEn register (address 6323h) bit allocation

Bit	7	6	5	4	3	2	1	0
Symbol	TestPinEn[7:0]							
Reset	0	0	0	0	0	0	0	0
Access	R/W	R/W	R/W	R/W	R/W	R/W	R/W	R/W

Table 270. Description of CIU_TestPinEn bits

Bit	Symbol	Description
7 to 0	TestPinEn[7:0]	Each of the bit enables the output driver for an internal test pin: P70_IRQ (MSB), RSTOUT_N, P35, P34 / SIC_CLK, P33_INT1, P32_INT0, P31 / UART_TX, P30 / UART_RX (LSB). DataEn[7] enables P70_IRQ, DataEn[0] enables P30 / UART_RX. **Note:** The data transmission of the defined sequence is started by the Transmit command.

All information provided in this document is subject to legal disclaimers.

© NXP B.V. 2017. All rights reserved.

8.6.23.49 CIU_TestPinValue register (6324h)

Defines the values for the 7 bit test bus signals to be I/O on P70_IRQ, RSTOUT_N, P35, P34 / SIC_CLK, P33_INT1, P32_INT0, P31 / UART_TX and P30 / UART_RX pins.

Table 271. CIU_TestPinValue register (address 6324h) bit allocation

Bit	7	6	5	4	3	2	1	0
Symbol	useio	TestPinValue[6:0]						
Reset	0	0	0	0	0	0	0	0
Access	R/W	R/W	R/W	R/W	R/W	R/W	R/W	R/W

Table 272. Description of CIU_TestPinValue bits

Bit	Symbol	Description
7	useio	Set to logic 1, this bit enables the I/O functionality for the internal test bus on the pins P70_IRQ (MSB), RSTOUT, P35, P34 / SIC_CLK, P33_INT1, P32_INT0, P31 / UART_TX, P30 / UART_RX (LSB) **Note:** Before using P34 / SIC_CLK as a test output, the SVDD switch should be closed. See register address 6106h.
6 to 0	TestPinValue[6:0]	UseIO set to logic 1, Read or write the value of the test bus. UseIO set to logic 0, Read 000_0000. No write.

8.6.23.50 CIU_TestBus register (6325h)

Shows the status of the internal test bus.

Table 273. CIU_TestBus register (address 6325h) bit allocation

Bit	7	6	5	4	3	2	1	0
Symbol	TestBus[7:0]							
Reset	x	x	x	x	x	x	x	x
Access	R	R	R	R	R	R	R	R

Table 274. Description of CIU_TestBus bits

Bit	Symbol	Description
7 to 0	TestBus[7:0]	Shows the status of the internal test bus. The test bus is selected by the register CIU_TestSel2. See Section 8.6.21.2 “CIU test bus” on page 151.

All information provided in this document is subject to legal disclaimers.

© NXP B.V. 2017. All rights reserved.

8.6.23.51 CIU_AutoTest register (6326h)

Controls the digital self-test.

Table 275. CIU_AutoTest register (address 6326h) bit allocation

Bit	7	6	5	4	3	2	1	0
Symbol	-	AmpRcv	-	-	SelfTest[3:0]			
Reset	0	1	0	0	0	0	0	0
Access	R	R	R	R	R/W	R/W	R/W	R/W

Table 276. Description of CIU_AutoTest bits

Bit	Symbol	Description
7	-	Reserved.
6	AmpRcv	Set to logic 1 the internal signal processing in the receiver chain is performed non-linear. This increases the operating distance in communication modes at 106 kbit/s. **Note:** Due to non linearity the effects of MinLevel and CollLevel in CIU_RxThreshold register are as well non linear.
5 to 4	-	Reserved
3 to 0	SelfTest[3:0]	Enables the digital Self Test. The self-test can be started by the Selftest command in the CIU_Command register. The self-test is enabled by 1001. **Note:** For default operation the self-test has to be disabled (0000).

8.6.23.52 CIU_Version register (6327h)

Shows the version of the CIU.

Table 277. CIU_Version register (address 6327h) bit allocation

Bit	7	6	5	4	3	2	1	0
Symbol	Product[3:0]				Version[3:0]			
Reset	1	0	0	0	0	0	0	0
Access	R	R	R	R	R	R	R	R

Table 278. Description of CIU_Version bits

Bit	Symbol	Description
7 to 4	Product	Product 1000 (PN533)
3 to 0	Version	Version 0000

All information provided in this document is subject to legal disclaimers.

© NXP B.V. 2017. All rights reserved.

8.6.23.53 CIU_AnalogTest register (6328h)

Controls the pins AUX1 and AUX2.

Table 279. CIU_AnalogTest register (address 6328h) bit allocation

Bit	7	6	5	4	3	2	1	0
Symbol	AnalogSelAux1[3:0]				AnalogSelAux2[3:0]			
Reset	0	0	0	0	0	0	0	0
Access	R/W	R/W	R/W	R/W	R/W	R/W	R/W	R/W

Table 280. Description of CIU_AnalogTest bits

Bit	Symbol	Description
7 to 4	AnalogSelAux1[3:0]	Controls the AUX1 pin. Note: All test signals are described in Section 8.6.21.3 “Test signals at pin AUX” on page 152.
		0000 Tristate
		0001 DAC output: register CIU_TestDAC1[1]
		0010 DAC output: test signal corr1[1]
		0011 DAC output: test signal corr2[1]
		0100 DAC output: test signal MinLevel[1]
		0101 DAC output: ADC_I[1]
		0110 DAC output: ADC_Q[1]
		0111 DAC output: ADC_I combined with ADC_Q[1]
		1000 Test signal for production test
		1001 secure IC clock
		1010 ErrorBusBit as described in Table 178 on page 155
		1011 Low
		1100 TxActive At 106 kbit/s: High during Start bit, Data bits, Parity and CRC At 212 kbit/s and 424 kbit/s: High during Preamble, Sync, Data bits and CRC
		1101 RxActive At 106 kbit/s: High during Data bits, Parity and CRC At 212 kbit/s and 424 kbit/s: High during Data bits and CRC
		1110 Subcarrier detected At 106 kbit/s: not applicable At 212 kbit/s and 424 kbit/s: High during last part of preamble, Sync, Data bits and CRC.
		1111 Test bus bit as defined by the TstBusBitSel in Table 266 on page 191

All information provided in this document is subject to legal disclaimers.

© NXP B.V. 2017. All rights reserved.

Table 280. Description of CIU_AnalogTest bits *...continued*

Bit	Symbol	Description
3 to 0	AnalogSelAux2[3:0]	Controls the AUX2 pin. Note: All test signals are described in Section 8.6.21.3 "Test signals at pin AUX" on page 152.
		0000 Tristate
		0001 DAC output: register CIU_TestDAC2[2]
		0010 DAC output: test signal corr1[2]
		0011 DAC output: test signal corr2[2]
		0100 DAC output: test signal MinLevel[2]
		0101 DAC output: ADC_I[2]
		0110 DAC output: ADC_Q[2]
		0111 DAC output: ADC_I combined with ADC_Q[2]
		1000 Test signal for production test
		1001 secure IC clock
		1010 ErrorBusBit as described in Table 178 on page 155
		1011 Low
		1100 TxActive At 106 kbit/s: High during Start bit, Data bits, Parity and CRC At 212 kbit/s and 424 kbit/s: High during Preamble, Sync, Data bits and CRC
		1101 RxActive At 106 kbit/s: High during Data bits, Parity and CRC At 212 kbit/s and 424 kbit/s: High during Data bits and CRC
		1110 Subcarrier detected At 106 kbit/s: not applicable At 212 kbit/s and 424 kbit/s: High during last part of preamble, Sync, Data bits and CRC.
		1111 Test bus bit as defined by the TstBusBitSel in Table 265 on page 191

[1] Current output. The use of 1 kΩ pull down resistor on AUX1 is recommended.

[2] Current output. The use of 1 kΩ pull down resistor on AUX2 is recommended.

All information provided in this document is subject to legal disclaimers.

© NXP B.V. 2017. All rights reserved.

8.6.23.54 CIU_TestDAC1 register (6329h)

Defines the test value for TestDAC1.

Table 281. CIU_TestDAC1 register (address 6329h) bit allocation

Bit	7	6	5	4	3	2	1	0
Symbol	-	-	TestDAC1[5:0]					
Reset	0	0	X	X	X	X	X	X
Access	R	R	R/W	R/W	R/W	R/W	R/W	R/W

Table 282. Description of CIU_TestDAC1 bits

Bit	Symbol	Description
7 to 6	-	Reserved.
5 to 0	TestDAC1[5:0]	Defines the test value for TestDAC1. The output of the DAC1 can be switched to AUX1 by setting AnalogSelAux1 to 0001 in the CIU_AnalogTest register.

8.6.23.55 CIU_TestDAC2 register (632Ah)

Defines the test value for TestDAC2.

Table 283. CIU_TestDAC2 register (address 632Ah) bit allocation

Bit	7	6	5	4	3	2	1	0
Symbol	-	-	TestDAC2[6:0]					
Reset	0	0	X	X	X	X	X	X
Access	R	R	R/W	R/W	R/W	R/W	R/W	R/W

Table 284. Description of CIU_TestDAC2 bits

Bit	Symbol	Description
7 to 6	-	Reserved.
5 to 0	TestDAC2[6:0]	Defines the test value for TestDAC2. The output of the DAC2 can be switched to AUX2 by setting AnalogSelAux2 to 0001 in the CIU_AnalogTest register.

8.6.23.56 CIU_TestADC register (632Bh)

Shows the actual value of ADC I and Q channel.

Table 285. CIU_TestADC register (address 632Bh) bit allocation

Bit	7	6	5	4	3	2	1	0
Symbol	ADC_I[3:0]			ADC_Q[3:0]				
Reset	X	X	X	X	X	X	X	X
Access	R	R	R	R	R	R	R	R

Table 286. Description of CIU_TestADC bits

Bit	Symbol	Description
7 to 4	ADC_I[3:0]	Shows the actual value of ADC I channel.
3 to 0	ADC_Q[3:0]	Shows the actual value of ADC Q channel.

All information provided in this document is subject to legal disclaimers.

© NXP B.V. 2017. All rights reserved.

8.6.23.57 CIU_RFlevelDet register (632Fh)

Power down of the RF level detector.

Table 287. CIU_RFlevelDet register (address 632Fh) bit allocation

Bit	7	6	5	4	3	2	1	0
Symbol	-	-	-	pd_rflvldet	-	-	-	-
Reset	0	0	0	0	0	0	0	0
Access	R/W	R/W	R/W	R/W	R/W	R/W	R/W	R/W

Table 288. Description of CIU_RFlevelDet bits

Bit	Symbol	Description
7 to 5	-	Reserved. **These bits must be set to logic level 0.**
4	pd_rfleveldet	**Power down of the RF level detector.** When set to logic 1, the RF level detector is in power down mode.
3 to 0	-	Reserved. **These bits must be set to logic level 0.**

All information provided in this document is subject to legal disclaimers.

© NXP B.V. 2017. All rights reserved.

8.7 Registers map

8.7.1 Standard registers

Table 289. Standard registers mapping

Register address	Register name	Bit7	Bit6	Bit5	Bit4	Bit3	Bit2	Bit1	Bit0
6000h to 6102h	Reserved								
6103h	Config I0_I1	int1_pol		pad_I1		pad_I0	enselif	Selif[1:0]	
6104h	Observe_testbus								observe_ciu
6105h	Data_rng	data_rng							
6106h	Control_switch_rng		hide_svdd_sig	sic_switch_overload	sic_switch_en		cpu_need_rng	random_dataready	
6107h	GPIRQ	gpirq_level_P71	gpirq_level_P50	gpirq_level_P35	gpirq_level_P34	gpirq_enable_P71	gpirq_enable_P50	gpirq_enable_P35	gpirq_enable_P34
6108h	Reserved								
6109h	LDO	Reserved		overcurrent_status	sel_overcurrent[1:0]		enoffset	soft_highspeedreg	control_highspeedreg
610Ah	i^2c_wu_control						i^2c_wu_en_wr	i^2c_wu_en_rd	i^2c_wu_en
610Bh	Reserved								
610Ch	Andet_control	andet_bot	andet_up	andet_ithl[1:0]		andet_ithh[2:0]			andet_en
610Dh	Reserved								
610Eh	NFC_WI_control					nfc_wi_status		nfc_wi_en_act_req_im	nfc_wi_en_clk
610Fh	Reserved								
6200h	PCR CFR							cpu_freq[1:0]	
6201h	PCR CER					hsu_enable			
6202h	PCR ILR		porpulse_latched		enable_pdselif		gpirq_level	int1_level	int0_level
6203h	PCR Control	Reserved						clear_wakeup_cond	soft_reset
6204h	PCR Status	i^2c_wu	gpirq_wu	SPI_wu	HSU_wu	CIU_wu		int1_wu	int0_wu
6205h	PCR Wakeupen	i^2c_wu_en	GPIRQ_wu_en	SPI_on_en	HSU_on_en	CIU_wu_en		int1_en	int0_en
6206h to 6300h	Reserved								
6301h	CIU_Mode	MSBFirst	DetectSync	TXWaitRF	RxWaitRF	PolSigin	ModeDetOff	CRCPreset[1:0]	
6302h	CIU_TxMode	TxCRCEn	TxSpeed[2:0]			InvMod	TxMix	TxFraming[1:0]	
6303h	CIU_RxMode	RXCRCEn	RxSpeed[2:0]			RxNoErr	RxMultiple	RxFraming[1:0]	
6304h	CIU_TxControl	InvTx2RFon	InvTx1RFon	InvTx2RFoff	InvTx1RFoff	Tx2CW	CheckRF	Tx2RFEn	Tx1RFEn
6305h	CIU_TxAuto	AutoRFOFF	Force100ASK	AutoWakeUp		CAOn	InitialRFOn	Tx2RFAutoEn	Tx1RFAutoEn
6306h	CIU_TxSel	LoadModSel[1:0]		DriverSel[1:0]		SigOutSel[3:0]			
6307h	CIU_RxSel	UartSel[1:0]		RxWait[5:0]					
6308h	CIU_RxThreshold	MinLevel[3:0]					Collevel[2:0]		
6309h	CIU_Demod	AddIQ[1:0]		FixIQ		TauRcv[1:0]		TauSync[1:0]	

All information provided in this document is subject to legal disclaimers.

© NXP B.V. 2017. All rights reserved.

Table 289. Standard registers mapping *...continued*

Register address	Register name	Bit7	Bit6	Bit5	Bit4	Bit3	Bit2	Bit1	Bit0
630Ah	CIU_FelNFC1	FelSyncLen[1:0]		DataLenMin[5:0]					
630Bh	CIU_FelNFC2	WaitForSelected	ShortTimeSlot	DataLenMax[5:0]					
630Ch	CIU_MifNFC	SensMiller[2:0]			TauMiller[1:0]		MFHalted	TxWait[1:0]	
630Dh	CIU_ManualRCV		FastFiltMF_SO	DelayMF_SO	ParityDisable	LargeBWPLL	ManualHPCF	HPCF[1:0]	
630Eh	CIU_TypeB	RxSOFReq	RxEOFReq	Reserved	EOFSOFWidth	NoTxSOF	NoTxEOF	TxEGT[1:0]	
630Fh to 6310h	Reserved								
6311h	CIU_CRCResultMSB	CRCResultMSB[7:0]							
6312h	CIU_CRCResultLSB	CRCResultLSB[7:0]							
6313h	CIU_GsNOff	CWGsNOff[3:0]				ModGsNOff[3:0]			
6314h	CIU_ModWidth	ModWidth[7:0]							
6315h	CIU_TxBitPhase	RcvClkChange	TxBitPhase[6:0]						
6316h	CIU_RFCfg	RFLevelAmp	RxGain[2:0]			RFLevel[3:0]			
6317h	CIU_GsNOn	CWGsNOn[3:0]				ModGsNOn[3:0]			
6318h	CIU_CWGsP	Reserved		CWGsP[5:0]					
6319h	CIU_ModGsP	Reserved		ModGsP[5:0]					
631Ah	CIU_TMode	TAuto	TGated[1:0]		TAutoRestart	TPrescaler_Hi[3:0]			
631Bh	CIU_TPrescaler	TPrescaler_LO[7:0]							
631Ch	CIU_TReloadVal_Hi	TReloadVal_Hi[7:0]							
631Dh	CIU_TReloadVal_Lo	TReloadVal_Lo[7:0]							
631Eh	CIU_TCounterVal_hi	TCounterVal_Hi[7:0]							
631Fh	CIU_TCounterVal_lo	TCounterVal_LO[7:0]							
6320h	Reserved								
6321h	CIU_TestSel1	LoadModTst[1:0]		SICclksel[1:0]		SICClkD1	TstBusBitSel[2:0]		
6322h	CIU_TestSel2	TstBusFlip	PRBS9	PRBS15	TstBusSel[4:0]				
6323h	CIU_TestPinEn	TestPinEn[7:0]							
6324h	CIU_TestPinValue	useio	TestPinValue[6:0]						
6325h	CIU_TestBus	TestBus[7:0]							
6326h	CIU_AutoTest	Reserved	AmpRcv	Reserved		SelfTest[3:0]			
6327h	CIU_Version	Product				Version			
6328h	CIU_AnalogTest	AnalogSelAux1[3:0]				AnalogSelAux2[3:0]			
6329h	CIU_TestDAC1	Reserved		TestDAC1[5:0]					
632Ah	CIU_TestDAC2	Reserved		TestDAC2[5:0]					
632Bh	CIU_TestADC	ADC_I[3:0]			ADC_Q[3:0]				
632Ch to 632Eh	Reserved								

All information provided in this document is subject to legal disclaimers.

© NXP B.V. 2017. All rights reserved.

Table 289. Standard registers mapping *...continued*

Register address	Register name	Bit7	Bit6	Bit5	Bit4	Bit3	Bit2	Bit1	Bit0
632Fh	CIU_RFlevelDet				pd_rfleveldet				
6330h	SIC_CLK	sic_clk_p34_en				Errorbusbitenable	Errorbusbitsel[2:0]		
6331h	CIU_Command			RcvOff	Power-down	Command			
6332h	CIU_CommIEn	Reserved	TxIEn	RXIEn	IdleIEn	HiAlertIEn	LoAlertIEn	ErrIEn	TimerIEn
6333h	CIU_DivIEn				SiginAct IEn	ModeIEn	CRCIEn	RfOnIEn	RfOffIEn
6334h	CIU_CommIrq	Set1	TxIRq	RxIRq	IdleIrq	HiAltertIRq	LoAlertIRq	ErrIRq	TimerIRq
6335h	CIU_DivIrq	Set2			SiginActIrq	ModeIRq	CRCIRq	RfOnIRq	RfOffIRq
6336h	CIU_Error	WrErr	TempErr	RFErr	BufferOvfl	CollErr	CRCErr	ParityErr	ProtocollErr
6337h	CIU_Status1	CIU_IRQ_1	CRCOk	CRCReady	CIU_IRQ_0	TRunning	RFOn	HiAlert	LoAlert
6338h	CIU_Status2	TempSensClear		RFFreqOK	TgActivated	MFCrypto1On	ModemState[2:0]		
6339h	CIU_FIFOData	FIFOData[7:0]							
633Ah	CIU_FIFOLevel	FlushBuffer	FIFOLevel[6:0]						
633Bh	CIU_WaterLevel			WaterLevel[5:0]					
633Ch	CIU_Control	TStopNow	TStartNow	WrNFCIP-1IDtoFIFO	Initiator		RxLastBits[2:0]		
633Dh	CIU_BitFraming	StartSend	RxAlign[2:0]				TxLastBits[2:0]		
633Eh	CIU_Coll	ValuesAfterColl	Reserved	CollPosNotValid	CollPos				
633Fh to FFFFh	Reserved								

All information provided in this document is subject to legal disclaimers.

© NXP B.V. 2017. All rights reserved.

8.7.2 SFR registers

Table 290. SFR registers mapping

SFR address	Register name	Bit7	Bit6	Bit5	Bit4	Bit3	Bit2	Bit1	Bit0
80h	Reserved								
81h[1]	SP Stack Pointer	SP[7:0]							
82h[1]	DPL Data Pointer Low	DPL[7:0]							
83h[1]	DPH Data Pointer High	DPLH7:0]							
84h to 86h	Reserved								
87h	PCON	SMOD	Reserved					CPU_PD	Reserved
88h	T01CON	TF1	TR1	TF0	TR0	IE1	IT1	IE0	IT0
89h	T01MOD	GATE1	C/T1	M11	M10	GATE0	C/T0	M01	M00
8Ah	T0L	T0L.7	T0L.6	T0L.5	T0L.4	T0L.3	T0L.2	T0L.1	T0L.0
8Bh	T1L	T1L.7	T1L.6	T1L.5	T1L.4	T1L.3	T1L.2	T1L.1	T1L.0
8Ch	T0H	T0H.7	T0H.6	T0H.5	T0H.4	T0H.3	T0H.2	T0H.1	T0H.0
8Dh	T1H	T1H.7	T1H.6	T1H.5	T1H.4	T1H.3	T1H.2	T1H.1	T1H.0
8Eh to 97h	Reserved								
98h	S0CON	SM0	SM1	SM2	REN	TB8	RB8	TI	RI
99h	S0BUF	S0BUF[7:0]							
9Ah	RWL	RWaterlevel[7:0]							
9Bh	TWL	TWaterlevel[7:0]							
9Ch	FIFOFS	TransmitFreespace[7:0]							
9Dh	FIFOFF	ReceiveFullness[7:0]							
9Eh	SFF	FIFO_EN	Reserved	TWLL	TFF	TFE	RWLH	RFF	RFE
9Fh	FIT	Reset	Reserved	WCOL_IRQ	TWLL_IRQ	TFF_IRQ	RWLH_IRQ	ROVR_IRQ	RFF_IRQ
A0h	Reserved								
A1h	FITEN	TFLUSH	RFLUSH	EN_WCOL_IRQ	EN_TWLL_IRQ	EN_TFF_ IRQ	EN_RWLH_IRQ	EN_ROVR_IRQ	EN_RFF_ IRQ
A2h	FDATA	FDATA[7:0]							
A3h	FSIZE	ReceiveSize[7:0]							
A4h to A7h	Reserved								
A8h	IE0	IE0_7	IE0_6	IE0_5	IE0_4	IE0_3	IE0_2	IE0_1	IE0_0
A9h	SPIcontrol	Reserved		Enable	Reserved	CPHA	CPOL	IE1	IE0
AAh	SPIstatus	Reserved				TR_FE	RCV_OVR	Reserved	READY
ABh	HSU_STA	set_bit	Reserved		disable_preamb	irq_rx_over_en	irq_rx_fer_en	irq_rx_over	irq_rx_fer
ACh	HSU_CTR	hsu_wu_en	start_frame	tx_stopbit[1:0]		rx_stopbit	tx_en	rx_en	soft_reset_n
ADh	HSU_PRE	hsu_prescaler[7:0]							
AEh	HSU_CNT	hsu_counter[7:0]							

PN5331B3HN

All information provided in this document is subject to legal disclaimers.

© NXP B.V. 2017. All rights reserved.

Table 290. SFR registers mapping *...continued*

SFR address	Register name	Bit7	Bit6	Bit5	Bit4	Bit3	Bit2	Bit1	Bit0
AFh	Reserved								
B0h	P3	Reserved		P3[5]	P3[4]	P3[3]	P3[2]	P3[1]	P3[0]
B1h to B7h	Reserved								
B8h	IP0	IP0_7	IP0_6	IP0_5	IP0_4	IP0_3	IP0_2	IP0_1	IP0_0
B9h to C7h	Reserved								
C8h	T2CON	TF2	Reserved	RCLK0	TCLK0	Reserved	TR2	C/T2	CP/RL2
C9h	T2MOD	Reserved					T2RD		DCEN
CAh	RCAP2L	R2L.7	R2L.6	R2L.5	R2L.4	R2L.3	R2L.2	R2L.1	R2L.0
CBh	RCAP2H	R2H.7	R2H.6	R2H.5	R2H.4	R2H.3	R2H.2	R2H.1	R2H.0
CCh	T2L	T2L.7	T2L.6	T2L.5	T2L.4	T2L.3	T2L.2	T2L.1	T2L.0
CDh	T2H	T2H.7	T2H.6	T2H.5	T2H.4	T2H.3	T2H.2	T2H.1	T2H.0
CEh to CFh	Reserved								
D0h[1]	PSW Program Status Word	PSW[7:0]							
D1h	CIU_Command	Reserved		RcvOff	Power-down	Command			
D2h	CIU_CommIEn		TxIEn	RXIEn	IdleIEn	HiAlertIEn	LoAlertIEn	ErrIEn	TimerIEn
D3h	CIU_DivIEn	Reserved			SiginAct IEn	ModeIEn	CRCIEn	RfOnIEn	RfOffIEn
D4h	CIU_CommIrq	Set1	TxIRq	RxIRq	IdleIrq	HiAltertIRq	LoAlertIRq	ErrIRq	TimerIRq
D5h	CIU_DivIrq	Set2	Reserved		SiginActIrq	ModeIRq	CRCIRq	RfOnIRq	RfOffIRq
D6h	CIU_Error	WrErr	TempErr	RFErr	BufferOvfl	CollErr	CRCErr	ParityErr	ProtocollErr
D7h	Reserved								
D8h	I^2CCON	CR[2]	ENS1	STA	STO	SI	AA	CR[1:0]	
D9h	I^2CSTA	ST[7:0]							
DAh	I^2CDAT	I^2CDAT[7:0]							
DBh	I^2CADR	SA[6:0]							GC
DCh to DEh	Reserved								
DFh	CIU_Status1	CIU_IRQ_1	CRCOk	CRCReady	CIU_IRQ_0	TRunning	RFOn	HiAlert	LoAlert
E0h[1]	ACC Accumulator	ACC[7:0]							
E1h to E7h	Reserved								
E8h	IE1	IE1_7	Reserved	IE1_5	IE1_4	IE1_3	IE1_2	Reserved	IE1_0
E9h	CIU_Status2	TempSensClear	Reserved	RFFreqOK	TgActivated	MFCrypto1On	ModemState[2:0]		
EAh	CIU_FIFOData	FIFOData[7:0]							
EBh	CIU_FIFOLevel	FlushBuffer	FIFOLevel[6:0]						
ECh	CIU_WaterLevel			WaterLevel[5:0]					
EDh	CIU_Control	TStopNow	TStartNow	WrNFCIP-1ID to FIFO	Initiator	Reserved	RxLastBits[2:0]		
EEh	CIU_BitFraming	StartSend	RxAlign[2:0]			Reserved	TxLastBits[2:0]		

All information provided in this document is subject to legal disclaimers.

© NXP B.V. 2017. All rights reserved.

Table 290. SFR registers mapping *...continued*

SFR address	Register name	Bit7	Bit6	Bit5	Bit4	Bit3	Bit2	Bit1	Bit0
EFh	CIU_Coll	ValuesAfterColl		CollPosNotValid	CollPos				
F0h[1]	B register	B[7:0]							
F1h to F3h	Reserved								
F4h	P7FGA						P7CFGA[2]	P7CFGA[1]	P7CFGA[0]
F5h	P7FGB						P7CFGB[2]	P7CFGB[1]	P7CFGB[0]
F6h	Reserved								
F7h	P7						P7[2]	P7[1]	P7[0]
F8h	IP1	IP1_7		IP1_5	IP1_4	IP1_3	IP1_2		
F9h	Reserved								
FAh[1]	XRAMP				XRAMP[4:0]				
FBh	Reserved								
FCh	P3FGA			P3CFGA[5]	P3CFGA[4]	P3CFGA[3]	P3CFGA[2]	P3CFGA[1]	P3CFGA[0]
FDh	P3FGB			P3CFGB[5]	P3CFGB[4]	P3CFGB[3]	P3CFGB[2]	P3CFGB[1]	P3CFGB[0]
FEh to FFh	Reserved								

[1] This register is not described in this document as it is a standard 80C51 register.

All information provided in this document is subject to legal disclaimers.

© NXP B.V. 2017. All rights reserved.

9. Limiting values

Table 291. Limiting values

In accordance with the Absolute Maximum Rating System (IEC 60134).

Symbol	Parameter	Conditions	Min	Max	Unit
PV_{DD}, SV_{DD}, TV_{DD}, AV_{DD}, DV_{DD}	Supply Voltages		-0.5	4	V
V_{BUS}	USB Supply Voltage		-0.5	5.5	V
P_{tot}	Total power dissipation			608	mW
I_{SVDD}	Maximum current in SVDD switch			30	mA
V_{INRX}	Dynamic RX Input voltage Range	input signal at 13.56 MHz	-0.7	AVDD+1	V
V_{INTX1}, V_{INTX2}	DynamicTX1 input Voltage Range	input signal at 13.56 MHz	-1.2	TVDD+1.3	V
I_{TX1}, I_{TX2}	Maximum current in transmitter TX1	input signal at 13.56 MHz	-300	300	mA
V_{ESD}	Electrostatic discharge voltage				
V_{ESDH}	ESD Susceptibility (Human Body model)	EIA/JESD22-A114-E		± 2.0	kV
V_{ESDM}	ESD Susceptibility (Machine model)	EIA/JESD22-A115-A		200	V
V_{ESDC}	ESD Susceptibility (Charge Device model)	EIA/JESD22-C101-C		± 1.0	kV
T_{stg}	Storage temperature		-55	150	°C
T_j	Junction temperature		-40	100	°C

All information provided in this document is subject to legal disclaimers.

© NXP B.V. 2017. All rights reserved.

10. Recommended operating conditions

Table 292. Operating conditions

Symbol	Parameter	Conditions		Min	Typ	Max	Unit
T_{amb}	Ambient Temperature			-30	+25	+85	°C
V_{BUS}	USB Supply Voltage	V_{SS} = 0 V	[1]	4.02	5	5.25	V
	Supply Voltage (Non USB mode)	VBUS =D_{VDD} V_{SS} = 0 V		2.5	3.3	3.6	V
TV_{DD}, AV_{DD}, DV_{DD}	Supply Voltages	TV_{DD} = AV_{DD}= DV_{DD} V_{SS} = 0 V	[2][3]	2.5	3.3	3.6	V
PV_{DD}	Supply Voltage for host interface	V_{SS} = 0 V	[3]	1.6	1.8 to 3.3	3.6	V

[1] V_{SS} represents DV_{SS}, TV_{SS1}, TV_{SS2}, AV_{SS}.

[2] AV_{SS}, DV_{DD} and TV_{DD} shall always be on the same voltage level.

[3] Supply voltage of AV_{SS}, DV_{DD} and TV_{DD} below 3 V reduces the performance (e.g. the achievable operating distance).

11. Thermal characteristics

Table 293. Thermal characteristics

Symbol	Parameter	Conditions	Min	Typ	Max	Unit
R_{thj-a}	thermal resistance from junction to ambient	in free air with exposed pad soldered on a 4 layer Jedec PCB-0.5		37	41.1	K/W

All information provided in this document is subject to legal disclaimers.

© NXP B.V. 2017. All rights reserved.

12. Characteristics

Unless otherwise specified, the limits are given for the full operating conditions. The typical value is given for 25°C, DV_{DD} = 3.4 V and PV_{DD} = 3 V in non USB bus power mode, V_{BUS} = 5 V in USB power mode.

Timings are only given from characterization results.

12.1 Power management characteristics

12.1.1 Current consumption characteristics

Table 294. Current consumption characteristics

Symbol	Parameter	Conditions		Min	Typ	Max	Unit
I_{HPD}	Hard-Power-down current (Not powered from USB)	AV_{DD} = DV_{DD} = TV_{DD} = PV_{DD} = 3 V, RF level detector off	[5]		1.3	10	µA
I_{SPD}	Soft-Power-down current (Not powered from USB)	AV_{DD} = DV_{DD} = TV_{DD} = PV_{DD} = 3 V, SV_{DD} = 0 V, RF level detector on	[5]		9	30	µA
$I_{suspend}$	USB suspend current	V_{BUS} = 5 V, AV_{DD} = DV_{DD} = TV_{DD} = PV_{DD} = 3 V, SV_{DD} = 3 V, PVDD = 3 V RF level detector on (without resistor on ± D)	[5]		120	250	µA
I_{DVDD}	Digital supply current	AV_{DD} = DV_{DD} = TV_{DD} = PV_{DD} = 3 V, RF level detector on			12		
I_{AVDD}	Analog supply current	AV_{DD} = DV_{DD} = TV_{DD} = PV_{DD} = 3 V, RF level detector on			3	6	mA
$I_{AVDDrcvoff}$		AV_{DD} = DV_{DD} = TV_{DD} = PV_{DD} = 3 V, RF level detector off			1.5	5	mA
I_{PVDD}	Pad supply current		[2]			30	mA
I_{SVDD}	Output supply current	sam_switch_en set to 1	[3]			30	mA
I_{TVDD}	Transmitter supply current	Continuous wave, TV_{DD} = 3 V	[1][4]		60	100	mA

[1] ITVDD depends on TV_{DD} and the external circuitry connected to Tx1 and Tx2.

[2] IPV_{DD} depends on the overall load at the digital pins.

[3] ISV_{DD} depends on the overall load on SV_{DD} pad.

[4] During operation with a typical circuitry the overall current is below 100 mA.

[5] ISPD and IHPD are the total currents over all supplies.

Typical value using a complementary driver configuration and an antenna matched to 40 Ω between TX1 and TX2 at 13.56 MHz.

All information provided in this document is subject to legal disclaimers.

© NXP B.V. 2017. All rights reserved.

12.1.2 Voltage regulator characteristics

Table 295. Voltage regulator characteristics

Symbol	Parameter	Conditions		Min	Typ	Max	Unit
V_{BUS}	USB Supply voltage (USB mode)	V_{SS} = 0 V		4.02	5	5.25	V
D_{VDD}	Supply voltage after Inrush current limitation (USB mode)	From I_{DVDD} = 0 to I_{DVDD} = 150 mA		2.95	3.3	3.6	V
IV_{BUS}	Maximum load current (USB mode)	measured on V_{BUS}				150	mA
	Maximum Inrush current limitation	At power-up (curlimofff = 0)				100	mA
V_{th1}	Reset threshold on DV_{DD} falling			1.90	2.15	2.40	V
Vhys	Vth1 hysteresis			35	60	85	mV
Cdec	DVDD decoupling capacitor		[2]	8	10		µF

[1] The internal regulator is only enabled when the USB interface is selected by I0 and I1.

[2] For more details on Implementation of decoupling capacitor refer to Figure 30, Figure 31 and Figure 32 in “Power distribution section”.

12.2 Antenna presence self test thresholds

The following values are guaranteed by design. Only functional is done in production for cases andet_ithl[1:0]=10b and for andet_ithh[2:0]=011b.

Table 296. Antenna presence detection lower levels characteristics

Symbol	Parameter	Conditions	Min	Typ	Max	Unit
I_{AndetH}	I_{DVDD} lower current threshold for antenna presence detection	andet_ithl[1:0] = 00b		5		mA
		andet_ithl[1:0] = 01b		15		mA
		andet_ithl[1:0] = 10b		25		mA
		andet_ithl[1:0] = 11b		35		mA

Table 297. Antenna Presence Detection Upper Levels characteristics

Symbol	Parameter	Conditions	Min	Typ	Max	Unit
I_{AndetH}	I_{DVDD} upper current threshold for antenna presence detection	andet_ithh[2:0] = 000b		45		mA
		andet_ithh[2:0] = 001b		60		mA
		andet_ithh[2:0] = 010b		75		mA
		andet_ithh[2:0] = 011b		90		mA
		andet_ithh[2:0] = 100b		105		mA
		andet_ithh[2:0] = 101b		120		mA
		andet_ithh[2:0] = 110b		135		mA
		andet_ithh[2:0] = 111b		150		mA

All information provided in this document is subject to legal disclaimers.

© NXP B.V. 2017. All rights reserved.

12.3 Typical 27.12 MHz Crystal requirements

Table 298. Crystal requirements

Symbol	Parameter	Conditions	Min	Typ	Max	Unit
f_{XTAL}	XTAL frequency		27.107	27.12	27.133	MHz
ESR	Equivalent series resistance				100	Ω
C_{LOAD}	Load capacitance			10		pF
P_{XTAL}	Drive level		100			μW

12.4 Pin characteristics for 27.12 MHz XTAL Oscillator (OSCIN, OSCOUT)

Table 299. Pin characteristics for 27.12 MHz XTAL Oscillator (OSCIN, OSCOUT)

Symbol	Parameter	Conditions	Min	Typ	Max	Unit
$I_{LeakOSCIN}$	Input Leakage current	RSTPD_N = 0 V	-1		1	mA
$V_{IHOSCIN}$	High level Input voltage		$0.7 \times AV_{DD}$		AV_{DD}	V
$V_{ILOSCIN}$	Low level Input voltage		0		$0.3 \times AV_{DD}$	V
D_{COSCIN}	DC input voltage			0.65		V
$C_{inOSCIN}$	OSCIN Input Capacitance	AV_{DD} = 2.8 V, VDC = 0.65 V, VAC = 1 Vpp		2		pF
$V_{OHOSCOUT}$	High level output voltage			1.1		V
$V_{OLOSCOUT}$	Low level output voltage			0.2		V
$C_{inOSCOUT}$	Input Capacitance			2		pF
f_{OSCIN}	Clock Frequency		-500 ppm	27.12	+500 ppm	MHZ
D_{FEC}	Duty Cycle of Clock Frequency		40	50	60	%
$N_{floorCLK}$	Clock phase noise floor	[1]			-140	dBc/Hz
N_{FCCLK}	Clock phase noise corner	NfloorCLK = -140dBc/Hz; -20dB/decade slope [1]			50	kHz

[1] NFCLK and NCCLK define the mask for maximum acceptable phase noise of the clock signal at the OSCIN, OSCOUT inputs. See Figure 59 “27.12 MHz input clock phase noise spectrum mask”.

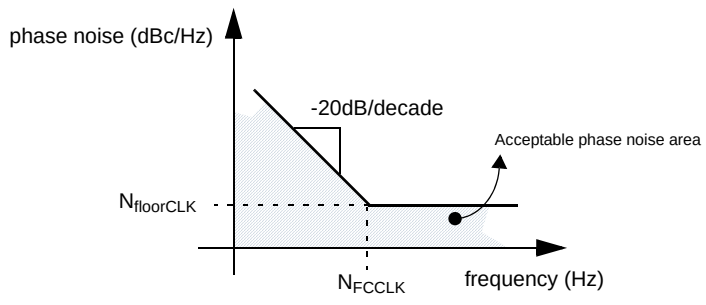

Fig 59. 27.12 MHz input clock phase noise spectrum mask

All information provided in this document is subject to legal disclaimers.

© NXP B.V. 2017. All rights reserved.

12.5 RSTPD_N input pin characteristics

Table 300. RSTPD_N input pin characteristics

Symbol	Parameter	Conditions	Min	Typ	Max	Unit
V_{IH}	High level input voltage		PV_{DD} -0.4		PV_{DD}	V
V_{IL}	Low level input voltage		0		0.4	V
I_{IH}	High level input current	$V_I = PV_{DD}$	-1		1	µA
I_{IL}	Low level input current	$V_I = 0$ V	-1		1	µA
C_{in}	Input capacitance			2.5		pF

12.6 Input pin characteristics for I0, I1 and TESTEN

Table 301. Input pin characteristics for I0, I1 and TESTEN

Symbol	Parameter	Conditions		Min	Typ	Max	Unit
V_{IH}	High level input voltage		[1]	$0.7 \times DV_{DD}$		DV_{DD}	V
V_{IL}	Low level input voltage		[2]	0		$0.3 \times DV_{DD}$	V
I_{IH}	High level input current I0 and I1	$V_I = DV_{DD}$	[3]	-1		1	µA
I_{IL}	Low level input current	$V_I = 0$ V		-1		1	µA
C_{in}	Input capacitance				2.5		pF

[1] To minimize power consumption when in Soft-Power-down mode, the limit is DV_{DD} - 0.4 V.

[2] To minimize power consumption when in Soft-Power-down mode, the limit is 0.4 V.

[3] TESTEN should never be set to high level in the application. It is used for production test purpose only. It is recommended to connect TESTEN to ground although there is a pull-down included.

All information provided in this document is subject to legal disclaimers.

© NXP B.V. 2017. All rights reserved.

12.7 RSTOUT_N output pin characteristics

Table 302. RSTOUT_N output pin characteristics

Symbol	Parameter	Conditions		Min	Typ	Max	Unit
V_{OH}	High level output voltage	PV_{DD} = 3 V, I_{OH} = -4 mA		0.7 × PV_{DD}		PV_{DD}	V
		PV_{DD} = 1.8 V, I_{OH}= -2 mA	[2]	0.7 × PV_{DD}		PV_{DD}	V
V_{OL}	Low level output voltage	PV_{DD} = 3 V, I_{OL} = 4 mA		0		0.3 × PV_{DD}	V
		PV_{DD} = 1.8 V, I_{OL} = 2 mA	[2]	0		0.3 × PV_{DD}	V
I_{OH}	High level output current	PV_{DD} = 3 V, V_{OH} = 0.8 × PV_{DD}	[3]	-4			mA
		PV_{DD} = 1.8 V, V_{OH}= 0.7 × PV_{DD}		-2			mA
I_{OL}	Low level output current	PV_{DD} = 3 V, V_{OL} = 0.2 × PV_{DD}	[3]	4			mA
		PV_{DD} = 1.8 V, V_{OL} = 0.3 × PV_{DD}		2			mA
C_{out}	Load capacitance					30	pF
$t_{rise,fall}$	Rise and fall times	PV_{DD} = 3 V, V_{OH} = 0.8 × PV_{DD}, V_{OL} = 0.2 × PV_{DD}, C_{out} = 30 pF	[1]			13.5	ns
		PV_{DD} = 1.8 V, V_{OH} = 0.7 × PV_{DD}, V_{OL} = 0.3 × PV_{DD}, C_{out} = 30 pF				10.8	ns

[1] I_{OH} and I_{OL} give the output drive capability from which the rise and fall times may be calculated as a function of the load capacitance.

[2] Data at PVDD= 1.8V are only given from characterization results.

[3] The I_{OH} and I_{OL} give the output driving capability and allow to calculate directly the rise and fall time as function of the load capacitance

All information provided in this document is subject to legal disclaimers.

© NXP B.V. 2017. All rights reserved.

12.8 Input/output characteristics for pin P70_IRQ

Table 303. Input/output pin characteristics for pin P70_IRQ

Symbol	Parameter	Conditions		Min	Typ	Max	Unit
V_{IH}	High level input voltage		[1]	$0.7 \times PV_{DD}$		PV_{DD}	V
V_{IL}	Low level input voltage		[2]	0		$0.3 \times PV_{DD}$	V
V_{OH}	Push-pull mode high level output voltage	PV_{DD} = 3 V, I_{OH} = -4 mA		$0.7 \times PV_{DD}$		PV_{DD}	V
		PV_{DD} = 1.8 V, I_{OH} = -2 mA	[3]	$0.7 \times PV_{DD}$		PV_{DD}	V
V_{OL}	Push-pull mode low level output voltage	PV_{DD} = 3 V, I_{OL} = 4 mA		0		$0.3 \times PV_{DD}$	V
		PV_{DD} = 1.8 V, I_{OL} = 2 mA	[3]	0		$0.3 \times PV_{DD}$	V
I_{IH}	Input mode high level input current	$V_I = DV_{DD}$		-1		1	µA
I_{IL}	Input mode low level input current	V_I = 0 V		-1		1	µA
I_{OH}	High level output current	PV_{DD} = 3 V, $V_{OH} = 0.8 \times PV_{DD}$	[4]	-4			mA
I_{OL}	Low level output current	PV_{DD} = 3 V, $V_{OL} = 0.2 \times PV_{DD}$	[4]	4			mA
I_{Leak}	Input leakage current	RSTPD_N = 0.4 V		-1		1	µA
C_{in}	Input capacitance				2.5		pF
C_{out}	Load capacitance					30	pF
$t_{rise,fall}$	Rise and fall times	PV_{DD} = 3 V, $V_{OH} = 0.8 \times PV_{DD}$, $V_{OL} = 0.2 \times PV_{DD}$, C_{out}= 30 pF				13.5	ns
		PV_{DD} = 1.8 V, $V_{OH} = 0.7 \times PV_{DD}$, $V_{OL} = 0.3 \times PV_{DD}$, C_{out} = 30 pF				10.8	ns

[1] To minimize power consumption when in Soft-Power-down mode, the limit is PV_{DD} - 0.4 V.

[2] To minimize power consumption when in Soft-Power-down mode, the limit is 0.4 V.

[3] Data at PV_{DD} = 1.8 V are only given from characterization results.

[4] The I_{OH} and I_{OL} give the output driving capability and allow to calculate directly the rise and fall time as function of the load capacitance.

All information provided in this document is subject to legal disclaimers.

© NXP B.V. 2017. All rights reserved.

12.9 Input/output pin characteristics for P30 / UART_RX, P31 / UART_TX, P32_INT0, P33_INT1

Table 304. Input/output pin characteristics for P30 / UART_RX, P31 / UART_TX, P32_INT0, P33_INT1

Symbol	Parameter	Conditions		Min	Typ	Max	Unit
V_{IH}	High level input voltage		[1]	$0.7 \times PV_{DD}$		PV_{DD}	V
V_{IL}	Low level input voltage		[2]	0		$0.3 \times PV_{DD}$	V
V_{OH}	Push-pull mode high level output voltage	PV_{DD} = 3 V, I_{OH} = -4 mA		PV_{DD} - 0.4		PV_{DD}	V
		PV_{DD} = 1.8 V, I_{OH} = -2 mA	[3]	PV_{DD} - 0.4		PV_{DD}	V
V_{OL}	Push-pull mode low level output voltage	PV_{DD} = 3 V, I_{OL} = 4 mA		0		0.4	V
		PV_{DD} = 1.8 V, I_{OL} = 2 mA	[3]	0		0.4	V
I_{IH}	Input mode high level input current	$V_I = PV_{DD}$		-1		1	µA
I_{IL}	Input mode low level input current	V_I = 0 V		-1		1	µA
I_{OH}	High level output current	PV_{DD} = 3 V, $V_{OH} = 0.8 \times PV_{DD}$	[4]	-4			mA
I_{OL}	Low level output current	PV_{DD} = 3 V, $V_{OL} = 0.2 \times PV_{DD}$	[4]	4			mA
I_{Leak}	Input leakage current	RSTPD_N = 0.4 V		-1		1	µA
C_{in}	Input capacitance				2.5		pF
C_{out}	Load capacitance					30	pF
$t_{rise,fal}$	Rise and fall times	PV_{DD} = 3 V, $V_{OH} = 0.8 \times PV_{DD}$, $V_{OL} = 0.2 \times PV_{DD}$, C_{out} = 30 pF				13.5	ns
		PV_{DD} = 1.8 V, V_{OH} = 0.7 PV_{DD}, $V_{OL} = 0.3 \times PV_{DD}$, C_{out} = 30 pF				10.8	ns

[1] To minimize power consumption when in Soft-Power-down mode, the limit is PV_{DD} - 0.4 V.

[2] To minimize power consumption when in Soft-Power-down mode, the limit is 0.4 V

[3] Data at PV_{DD} = 1.8 V are only given from characterization results.

[4] The I_{OH} and I_{OL} give the output driving capability and allow to calculate directly the rise and fall time as function of the load capacitance.

All information provided in this document is subject to legal disclaimers.

© NXP B.V. 2017. All rights reserved.

12.10 Input/output pin characteristics for P35

Table 305. Input/output pin characteristics for P35

Symbol	Parameter	Conditions		Min	Typ	Max	Unit
V_{IH}	High level Input voltage		[1]	$0.7 \times DV_{DD}$		DV_{DD}	V
V_{IL}	Low level Input voltage		[2]	0		$0.3 \times DV_{DD}$	V
V_{OH}	High level output voltage	DV_{DD} = 3 V, I_{OH} = -4 mA		DV_{DD} - 0.4		DV_{DD}	V
V_{OL}	Low level output voltage	DV_{DD} = 3 V, I_{OL} = 4 mA		0		0.4	V
I_{IH}	High level input current	$V_I = DV_{DD}$		-1		1	µA
I_{IL}	Low level input current	V_I = 0 V		-1		1	µA
I_{OH}	High level output current	DV_{DD} = 3 V, $V_{OH} = 0.8 \times PV_{DD}$	[4]	-4			mA
I_{OL}	Low level output current	DV_{DD} = 3 V, $V_{OL} = 0.2 \times PV_{DD}$	[4]	4			mA
I_{Leak}	Input leakage current	RSTPD_N = 0.4 V		-1		1	µA
C_{in}	Input Capacitance				2.5		pF
C_{out}	Load Capacitance					30	pF
$t_{rise,fall}$	Rise and fall times	DV_{DD} = 3 V, $V_{OH} = DV_{DD}$ - 0.4, V_{OL} = 0.4, C_{out} = 30 pF				16.5	nS

[1] To minimize power consumption when in Soft-Power-down mode, the limit is DV_{DD} - 0.4 V.

[2] To minimize power consumption when in Soft-Power-down mode, the limit is 0.4 V.

[3] The I_{OH} and I_{OL} give the output driving capability and allow to calculate directly the rise and fall time as function of the load capacitance.

All information provided in this document is subject to legal disclaimers.

© NXP B.V. 2017. All rights reserved.

12.11 Input/output pin characteristics for DP and DM

Table 306. Input/output pin characteristics for DP and DM for USB interface

Symbol	Parameter	Conditions		Min	Typ	Max	Unit
V_{IH}	High level input voltage	PV_{DD} = 3.3 V		2		3.6	V
V_{IL}	Low level input voltage		[1]	0		0.8	V
V_{OH}	High level output voltage	PV_{DD} = 3.3 V, R_{PD} = 1.5 Ω to V_{SS}		2.8		PV_{DD}	V
V_{OL}	Low level output voltage	PV_{DD} = 3.3 V, R_{PD} = 1.5 Ω to PV_{DD}		0		0.3	V
I_{OH}	High level output current	PV_{DD} = 3.3 V, V_{OH} = 0.8 × PV_{DD}	[2]	-4			mA
		PV_{DD} = 1.8 V, V_{OH} = 0.7 × PV_{DD}		-2			mA
I_{OL}	Low level output current	PV_{DD} = 3.3 V, V_{OL} = 0.2 × PV_{DD}	[2]	4			mA
		PV_{DD} = 1.8 V, V_{OL} = 0.3 × PV_{DD}		2			mA
I_{IH}	High level input current	V_I = PV_{DD}				1	μA
I_{IL}	Low level input current	V_I = 0 V				1	μA
I_{Leak}	Input leakage current	RSTPD_N = 0 V		-1		1	μA
C_{in}	Input capacitance				2.5	3.5	pF
Z_{inp}	Input Impedance exclusive of pullup/pulldown (for low/full speed)			300			kΩ
Z_{DRV}	Driver output resistance			28		44	Ω
T_{FDRATE}	Full-speed Data rate			11.97		12.03	Mb/s
T_{DJ1}	source Jitter total (including frequency tolerance) to next transition for paired transition			-3.5		3.5	ns
T_{DJ2}				-4		4	ns
T_{FDEOP}	Source Jitter for differential transition to SE0 transition			-2		5	ns
T_{JR1}	Receiver Jitter: to next transition for paired transitions			-18.5		18.5	ns
T_{JR2}				-9		9	ns
T_{FEOPT}	Source SE0 interval of EOP			160		175	ns
T_{FEOPR}	Receiver SE0 interval of EOP			82			ns
T_{FST}	Width of SE0 interval during differential transition					14	ns

[1] The value doesn't guaranty the power down consumptions. To reach the specified power down consumptions, the limit is 0.4 V.

[2] The I_{OH} and I_{OL} give the output driving capability and allow to calculate directly the rise and fall time as function of the load capacitance.

All information provided in this document is subject to legal disclaimers.

© NXP B.V. 2017. All rights reserved.

Table 307. USB DP/DM differential receiver input levels

Symbol	Parameter	Conditions	Min	Typ	Max	Unit
V_{DI}	differential input sensitivity	-	0.2	-	-	V
V_{CM}	differential common mode voltage	-	0.8	-	2.5	V

Table 308. USB DP/DM driver characteristics

Symbol	Parameter	Conditions	Min	Typ	Max	Unit
t_{FR}	rise time	CL = 50 pF; 10% to 90% of [V_{OH} - V_{OL}]	4	-	20	ns
t_{FF}	fall time	CL = 50 pF; 10% to 90% of [V_{OH} - V_{OL}]	4	-	20	ns
F_{RFM}	differential rise/fall time matching (t_{FR}/t_{FF})	excluding the first transition from Idle state	90	-	111.1	%
V_{CRS}	output signal crossover voltage	excluding the first transition from Idle state	1.3	-	2.0	V

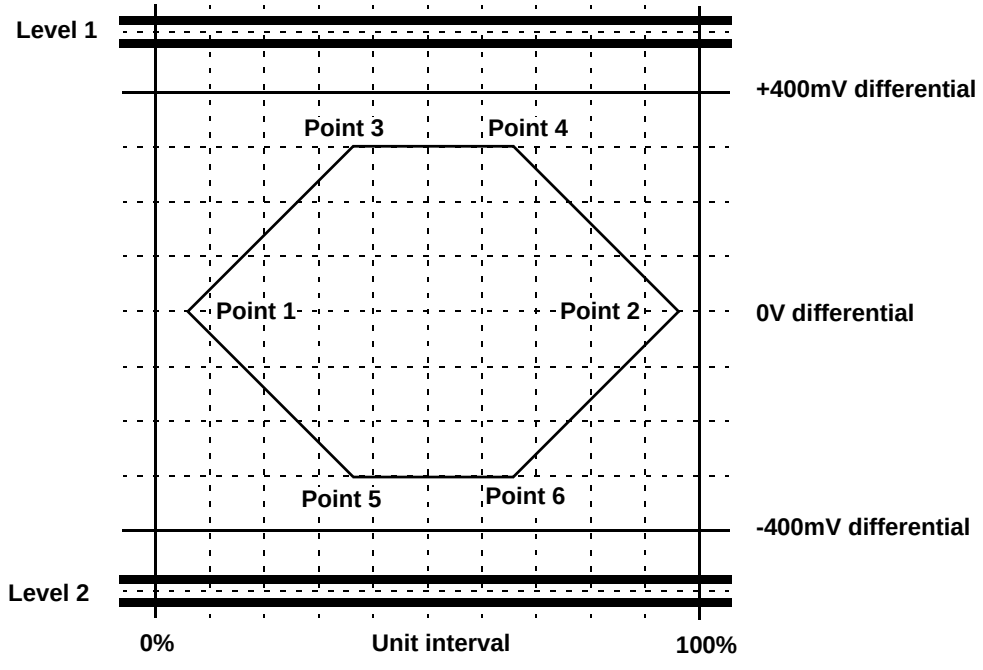

Fig 60. Transmit waveform at DP/DM

All information provided in this document is subject to legal disclaimers.

© NXP B.V. 2017. All rights reserved.

Table 309. Input Pin characteristics for DP for HSU interface

Symbol	Parameter	Conditions		Min	Typ	Max	Unit
V_{IH}	High level Input voltage		[1]	0.7 × PV_{DD}		PV_{DD}	V
V_{IL}	Low level Input voltage		[2]	0		0.3 × PV_{DD}	V
I_{IH}	High level input current	$V_i = PV_{DD}$				1	mA
I_{IL}	Low level input current	$V_i = 0$ V				1	mA
I_{Leak}	Input Leakage current	RSTPD_N = 0 V		-1		1	mA
C_{in}	Input Capacitance				2.5	3.5	pF

[1] The value doesn't guaranty the power down consumptions. To reach the specified power down consumptions, the limit is PV_{DD} - 0.4 V.

[2] The value doesn't guaranty the power down consumptions. To reach the specified power down consumptions, the limit is 0.4 V.

Table 310. Output Pin characteristics for DM for HSU interface

Symbol	Parameter	Conditions		Min	Typ	Max	Unit
V_{OH}	High level output voltage	PV_{DD} = 3 V, I_{OH} = -4 mA		PV_{DD} -0.4		PV_{DD}	V
		PV_{DD} = 1.8 V, I_{OH} = -2 mA		PV_{DD} -0.4		PV_{DD}	V
V_{OL}	Low level output voltage	PV_{DD} = 3 V, I_{OL} = -4 mA		0		0.4	V
		PV_{DD} = 1.8 V, I_{OL} = -2 mA		0		0.4	V
I_{OH}	High level output current	PV_{DD} = 3 V, V_{OH} = 0.8 × PV_{DD}	[1]	-4			mA
		PV_{DD} = 1.8 V, V_{OH} = 0.7 × PV_{DD}		-2			mA
I_{OL}	Low level output current	PV_{DD} = 3.3 V, V_{OL} = 0.2 × PV_{DD}	[1]	4			mA
		PV_{DD} = 1.8 V, V_{OL} = 0.3 × PV_{DD}		2			mA
I_{Leak}	Input leakage current	RSTPD_N = 0 V		-1		1	mA
C_{out}	Load Capacitance					30	pF
trise,fall	Rise and fall time	PV_{DD} = 3 V, V_{OH} = 0.8 × PV_{DD}, V_{OL} = 0.2 × PV_{DD}, C_{out} = 30 pF	[1]			13.5	nS
		PV_{DD} = 1.8 V, V_{OH} = 0.7 × PV_{DD}, V_{OL} = 0.3 × PV_{DD}, C_{out} = 30 pF				10.8	nS

[1] The I_{OH} and I_{OL} give the output driving capability and allow to calculate directly the rise and fall time as function of the load capacitance

All information provided in this document is subject to legal disclaimers.

© NXP B.V. 2017. All rights reserved.

12.12 Input pin characteristics for SCL

Table 311. Input/output drain output pin characteristics for SCL I²C interface

Symbol	Parameter	Conditions		Min	Typ	Max	Unit
V_{IH}	High level Input voltage		[1]	$0.7 \times PV_{DD}$		DV_{DD}	V
V_{IL}	Low level Input voltage		[2]	0		$0.3 \times DV_{DD}$	V
V_{OL}	Low level output voltage	DV_{DD} = 3 V, I_{OL} = -4 mA		0		0.3	V
I_{IH}	High level input current	$V_I = DV_{DD}$		-1		1	µA
I_{IL}	Low level input current	V_I = 0 V		-1		1	µA
I_{Leak}	Input leakage current	RSTPD_N = 0.4 V		-1		1	µA
C_{in}	Input Capacitance				2.5		pF
C_{out}	Load Capacitance					30	pF
t_r	Rise time SCL		[3]	20		300	ns
t_f	Fall time SCL		[3]	20		300	ns

[1] To minimize power consumption when in Soft-Power-down mode, the limit is DV_{DD} - 0.4 V.

[2] To minimize power consumption when in Soft-Power-down mode, the limit is 0.4 V.

[3] The PN533 has a slope control according to the I²C specification for the Fast mode. The slope control is always present and not dependant of the I²C speed.

12.13 Input/output pin characteristics for SDA

Table 312. Input/output pin characteristics for SDA I²C interface

Symbol	Parameter	Conditions		Min	Typ	Max	Unit
V_{IH}	High level Input voltage		[1]	$0.7 \times PV_{DD}$		DV_{DD}	V
V_{IL}	Low level Input voltage		[2]	0		$0.3 \times DV_{DD}$	V
V_{OL}	Low level output voltage	DV_{DD} = 3 V, I_{OL} = -4 mA		0		0.3	V
I_{IH}	High level input current	$V_I = DV_{DD}$		-1		1	µA
I_{IL}	Low level input current	V_I = 0 V		-1		1	µA
I_{Leak}	Input leakage current	RSTPD_N = 0.4 V		-1		1	µA
C_{in}	Input Capacitance				2.5		pF
C_{out}	Load Capacitance					30	pF
t_r	Rise time SDA		[3]	20		300	ns
t_f	Fall time SDA		[3]	20		300	ns

[1] To minimize power consumption when in Soft-Power-down mode, the limit is DV_{DD} - 0.4 V.

[2] To minimize power consumption when in Soft-Power-down mode, the limit is 0.4 V.

[3] The PN533 has a slope control according to the I²C specification for the Fast mode. The slope control is always present and not dependant of the I²C speed.

All information provided in this document is subject to legal disclaimers.

© NXP B.V. 2017. All rights reserved.

12.14 Output pin characteristics for Delatt

Table 313. Output pin characteristics for Delatt

Symbol	Parameter	Conditions		Min	Typ	Max	Unit
V_{OH}	High level Output voltage		[1]	$0.7 \times SV_{DD}$		SV_{DD}	V
V_{IL}	Low level Input voltage			0		$0.3 \times PV_{DD}$	V
I_{IH}	Input mode high level input current	$V_I = SV_{DD}$		-1		1	µA
I_{IL}	Input mode low level input current	$V_I = 0$ V		-1		1	µA
I_{Leak}	Input leakage current	RSTPD_N = 0.4 V		-1		1	µA
C_{in}	Input Capacitance				2.5		pF

[1] To minimize power consumption when in Soft-Power-down mode, the limit is PV_{DD} - 0.4 V.

12.15 Input pin characteristics for SIGIN

Table 314. Input/output pin characteristics for SIGIN

Symbol	Parameter	Conditions		Min	Typ	Max	Unit
V_{IH}	High level Input voltage		[1]	$0.7 \times SV_{DD}$		SV_{DD}	V
V_{IL}	Low level Input voltage		[2]	0		$0.3 \times SV_{DD}$	V
I_{IH}	High level input current	$V_I = SV_{DD}$		-1		1	µA
I_{IL}	Low level input current	$V_I = 0$ V		-1		1	µA
I_{Leak}	Input leakage current	RSTPD_N = 0.4 V		-1		1	µA
C_{in}	Input Capacitance				2.5		pF

[1] To minimize power consumption when in Soft-Power-down mode, the limit is SV_{DD} - 0.4 V.

[2] To minimize power consumption when in Soft-Power-down mode, the limit is 0.4 V.

12.16 Output pin characteristics for SIGOUT

Table 315. Output pin characteristics for SIGOUT

Symbol	Parameter	Conditions	Min	Typ	Max	Unit
V_{OH}	High level output voltage	$DV_{DD} - 0.1 < SV_{DD} < DV_{DD}$ $I_{OH} = -4$ mA	$SV_{DD} - 0.4$		SV_{DD}	V
V_{OL}	Low level output voltage	$DV_{DD} - 0.1 < SV_{DD} < DV_{DD}$ $I_{OL} = +4$ mA	0		0.4	V
I_{OH}	High level output current	$DV_{DD} - 0.1 < SV_{DD} < DV_{DD}$ $I_{OH} = -4$ mA	-0.4			mA
I_{OL}	Low level output current	$DV_{DD} - 0.1 < SV_{DD} < DV_{DD}$ $I_{OL} = +4$ mA	4			mA
I_{Leak}	Input leakage current	RSTPD_N = 0.4 V	-1		1	µA
C_{in}	Input Capacitance			2.5		pF
C_{out}	Load Capacitance				30	pF
$t_{rise,fall}$	Rise and fall times	$SV_{DD} = 3$ V, $V_{OH} = 0.8 \times SV_{DD}$, $V_{OL} = 0.2 \times SV_{DD}$, $C_{out} = 30$ pF			9	ns

All information provided in this document is subject to legal disclaimers.

© NXP B.V. 2017. All rights reserved.

12.17 Input/output pin characteristics for P34

Table 316. Input/output pin characteristics for P34

Symbol	Parameter	Conditions		Min	Typ	Max	Unit
V_{IH}	High level input voltage		[1]	$0.7 \times SV_{DD}$		SV_{DD}	V
V_{IL}	Low level input voltage		[2]	0		$0.3\times SV_{DD}$	V
V_{OH}	Push-pull mode high level output voltage	DV_{DD} - 0.1 < SV_{DD} < DV_{DD} I_{OH} = -4 mA		SV_{DD} - 0.4		SV_{DD}	V
V_{OL}	Push_pull mode low level output voltage	DV_{DD} - 0.1 < SV_{DD} < DV_{DD} I_{OH} = +4 mA		0		0.4	V
I_{IH}	Input mode high level input current	$V_I = SV_{DD}$		-1		1	µA
I_{IL}	Input mode low level input current	V_I = 0 V		-1		1	µA
I_{OH}	High level output voltage	DV_{DD} - 0.1 < SV_{DD} < DV_{DD} I_{OH} = -4 mA		-0.4			V
I_{OL}	Low level output voltage	DV_{DD} - 0.1 < SV_{DD} < DV_{DD} I_{OL} = +4 mA		4			V
I_{Leak}	Input leakage current	RSTPD_N = 0.4 V		-1		1	µA
C_{in}	Input Capacitance				2.5		pF
C_{out}	Load Capacitance					30	pF
$t_{rise,fall}$	Rise and fall times	DV_{DD} = 0.1 < DV_{DD} $V_{OH} = 0.8 \times SV_{DD}$, $V_{OL} = 0.2 \times SV_{DD}$, C_{out} = 30 pF	[3]		13.5		ns

[1] To minimize power consumption when in Soft-Power-down mode, the limit is SV_{DD} - 0.4 V.

[2] To minimize power consumption when in Soft-Power-down mode, the limit is 0.4 V.

[3] I_{OH} and I_{OL} specify the output drive capability from which the rise and fall times may be calculated as a function of the load capacitance.

12.18 Output pin characteristics for LOADMOD

Table 317. Output pin characteristics for LOADMOD

Symbol	Parameter	Conditions	Min	Typ	Max	Unit
V_{OH}	High level output voltage	DV_{DD} = 3 V, I_{OH} = -4 mA	DV_{DD} - 0.4		DV_{DD}	V
V_{OL}	Low level output voltage	DV_{DD} = 3 V, I_{OL} = 4 mA	0		0.4	V
C_{out}	Load Capacitance				10	pF
$t_{rise,fall}$	Rise and fall times	DV_{DD} = 3 V, $V_{OH} = 0.8 \times DV_{DD}$, $V_{OL} \times = 0.2 \times DV_{DD}$, C_{out} = 10 pF			4.5	ns

All information provided in this document is subject to legal disclaimers.

© NXP B.V. 2017. All rights reserved.

12.19 Input pin characteristics for RX

Table 318. Input pin characteristics for RX

Symbol	Parameter	Conditions	Min	Typ	Max	Unit
V_{INRX}	Dynamic Input voltage Range	signal frequency at 13.56 MHz	-0.7		AV_{DD} +1	V
C_{inrx}	RX Input Capacitance		6	10	14	pF
R_{inrx}	RX Input Series resistance	AV_{DD} = 3 V, Receiver active, VRX = 1 Vpp, 1.5 V DC offset	315	350	385	Ω
$V_{RX,MinIV,Mill}$	Minimum Dynamic Input voltage, Miller coded	106 kbit/s		150	500	mVpp
$V_{RX,MinIV,Man}$	Minimum Dynamic Input voltage, Manchester Coded	212 and 424 kbit/s		100	200	mVpp
$V_{RX,MaxIV,Mill}$	Maximum Dynamic Input voltage, Miller coded	106 kbit/s	AV_{DD}			Vpp
$V_{RX,MaxIV,Man}$	Maximum Dynamic Input voltage, Manchester Coded	212 and 424 kbit/s	AV_{DD}			Vpp
$V_{mRX,Mill}$	Minimum Modulation index, Miller coded	106 kbit/s VRX = 1.5 Vpp, SensMiller = 3		33		%
$V_{RXMod,Man}$	Minimum modulation voltage	RxGain = 6 and 7 [1]			6	mV
$V_{RXMod,Man}$	Minimum modulation voltage	RxGain = 4 and 5 [1]			18	mV
$V_{RXMod,Man}$	Minimum modulation voltage	RxGain = 0 to 3 [1]			120	mV

[1] The minimum modulation voltage is valid for all modulation schemes except Miller coded signals.

All information provided in this document is subject to legal disclaimers.

© NXP B.V. 2017. All rights reserved.

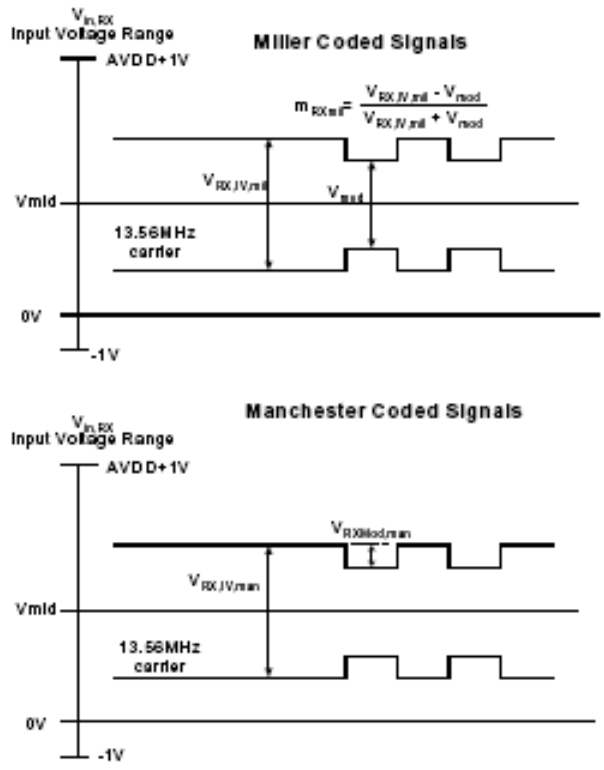

Fig 61. RX Voltage definitions

12.20 Output pin characteristics for AUX1/AUX2

Table 319. Output pin characteristics for AUX1/AUX2

Symbol	Parameter	Conditions	Min	Typ	Max	Unit
V_{OH}	High level output voltage	DV_{DD} = 3 V, I_{OH} = -4 mA	DV_{DD} - 0.4		DV_{DD}	V
V_{OL}	Low level output voltage	DV_{DD} = 3 V, I_{OL} = 4 mA	DV_{SS}		DV_{SS} +0.4	V
I_{OH}	High level output current	DV_{DD} = 3 V, V_{OH} = DV_{DD} -0.3	-4			mA
I_{OL}	Low level output current	DV_{DD} = 3 V, V_{OL} = DV_{DD} -0.3	4			mA
I_{Leak}	Input leakage current	RSTPD_N = 0 V	-1		1	µA
C_{in}	Input Capacitance			2.5		pF
C_{out}	Load Capacitance				15	pF

All information provided in this document is subject to legal disclaimers.

© NXP B.V. 2017. All rights reserved.

12.21 Output pin characteristics for TX1/TX2

Table 320. Output pin characteristics for TX1/TX2

Symbol	Parameter	Conditions	Min	Typ	Max	Unit
V_{OH}, C32, 3 V	High level output voltage	TV_{DD} = 3 V and I_{TX} = 32 mA, CWGsN = Fh			150	mV
V_{OH}, C80, 3 V	High level output voltage	TV_{DD} = 3 V and I_{TX} = 80 mA, CWGsN = Fh			400	mV
V_{OL}, C32, 3 V	Low level output voltage	TV_{DD} = 2.5V and I_{TX} = 32 mA, CWGsN = Fh			240	mV
V_{OL}, C80, 3 V	Low level output voltage	TV_{DD} = 2.5 V and I_{TX} = 80 mA, CWGsN = Fh			640	mV

Table 321. Output resistance for TX1/TX2

Symbol	Parameter	Conditions	Min	Typ	Max	Unit
$R_{OP,01H}$	High level output resistance	TV_{DD} = 3 V, V_{TX} = TV_{DD} - 100 mV, CWGsP = 01h	133	180	251	Ω
$R_{OP,02H}$	High level output resistance	TV_{DD} = 3 V, V_{TX} = TV_{DD} - 100 mV, CWGsP = 02h	67	90	125	Ω
$R_{OP,04H}$	High level output resistance	TV_{DD} = 3 V, V_{TX} = TV_{DD} - 100 mV, CWGsP = 04h	34	46	62	Ω
$R_{OP,08H}$	High level output resistance	TV_{DD} = 3 V, V_{TX} = TV_{DD} - 100 mV, CWGsP = 08h	17	23	31	Ω
$R_{OP,10H}$	High level output resistance	TV_{DD} = 3 V, V_{TX} = TV_{DD} - 100 mV, CWGsP = 10h	8.5	12	15.5	Ω
$R_{OP,20H}$	High level output resistance	TV_{DD} = 3 V, V_{TX} = TV_{DD} - 100 mV, CWGsP = 20h	4.7	6	7.8	Ω
$R_{OP,3FH}$	High level output resistance	TV_{DD} = 3 V, V_{TX} = TV_{DD} - 100 mV, CWGsP = 3Fh	2.3	3	4.4	Ω
$R_{ON,10H}$	Low level output resistance	TV_{DD} = 3 V, V_{TX} = TV_{DD} - 100 mV, CWGsN = 10h	34	46	62	Ω
$R_{ON,20H}$	Low level output resistance	TV_{DD} = 3 V, V_{TX} = TV_{DD} - 100 mV, CWGsN = 20h	17	23	31	Ω
$R_{ON,40H}$	Low level output resistance	TV_{DD} = 3 V, V_{TX} = TV_{DD} - 100 mV, CWGsN = 40h	8.5	12	15.5	Ω
$R_{ON,80H}$	Low level output resistance	TV_{DD} = 3 V, V_{TX} = TV_{DD} - 100 mV, CWGsN = 80h	4.7	6	7.8	Ω
$R_{ON,F0H}$	Low level output resistance	TV_{DD} = 3 V, V_{TX} = TV_{DD} - 100 mV, CWGsN = F0h	2.3	3	4.4	Ω

All information provided in this document is subject to legal disclaimers.

© NXP B.V. 2017. All rights reserved.

12.22 Timing for Reset

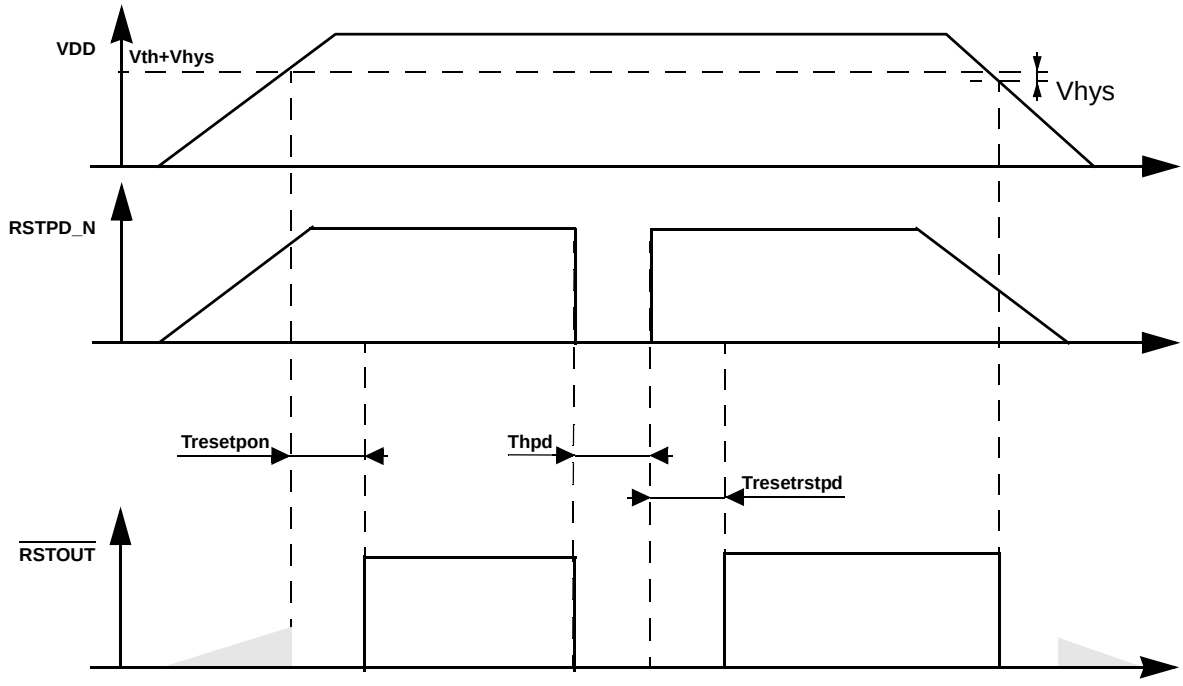

Fig 62. System reset overview

Table 322. Reset duration time

Symbol	Parameter	Conditions		Min	Typ	Max	Unit
$T_{resetpon}$	Reset time at power on		[1]	0.1	0.4	2	ms
T_{HPD}	Hard Power-down time	User dependent	[2]	20			ns
$T_{resetRSTPD_N}$	Reset time when RSTPD_N is released		[1]	0.1	0.4	2	ms

[1] Depends on the 27.12 MHz crystal oscillator startup time.

[2] In the case T_{HPD} pulse is shorter than 20 ns, it may happened that the IC would be partially resetted.

All information provided in this document is subject to legal disclaimers.

© NXP B.V. 2017. All rights reserved.

12.23 Timing for the I²C interface

Table 323. I²C timing specification

Symbol	Parameter	Conditions		Min	Typ	Max	Unit
f_{SCL}	SCL clock frequency			0		400	kHz
$t_{HD;\,STA}$	Hold time (repeated) START condition.	After this period, the first clock pulse is generated		600			ns
$t_{SU;\,STA}$	Set-up time for a repeated START condition			600			ns
$t_{SU;\,STO}$	Set-up time for STOP condition			600			ns
t_{LOW}	LOW period of the P50_SCL clock			1300			ns
t_{HIGH}	HIGH period of the P50_SCL clock			600			ns
$t_{HD;\,DAT}$	Data hold time			0		900	ns
$t_{SU;\,DAT}$	Data set-up time			100			ns
t_r	Rise time P50_SCL and SDA		[1]	20		300	ns
t_f	Fall time P50_SCL and SDA		[1]	20		300	ns
t_{BUF}	Bus free time between a STOP and START condition			1.3			ms
$t_{StrWuSpd}$	Stretching time on P50_SCL when woken-up on its own address		[2]			1	ms
t_{HDSDA}	Internal hold time for SDA			330		590	ns
t_{HDSDA}	Internal hold time for SDA in SPD mode		[3]		270		ns

[1] The PN533 has a slope control according to the I²C specification for the Fast mode. The slope control is always present and not dependant of the I²C speed.

[2] 27.12 MHz quartz starts in less than 800 µs. For example, quartz like TAS-3225A, TAS-7 or KSS2F with appropriate layout.

[3] The PN533 has an internal hold time of around 270ns for the SDA signal to bridge the undefined region of the falling edge of P50_SCL.

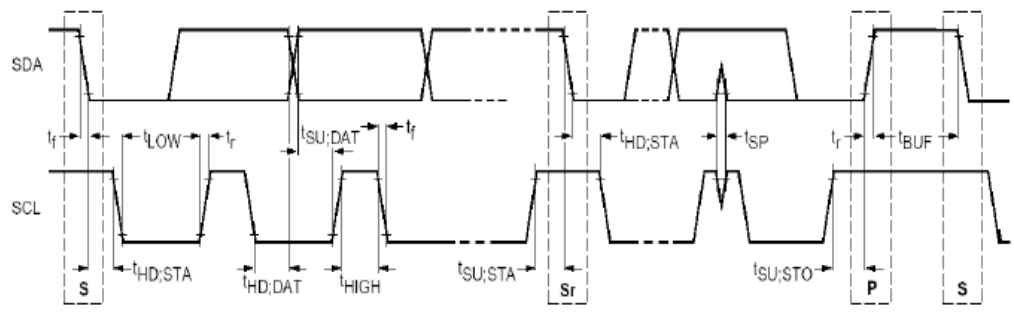

Fig 63. I²C timing diagram

All information provided in this document is subject to legal disclaimers.

© NXP B.V. 2017. All rights reserved.

12.24 Temperature sensor

Table 324. Temperature sensor characteristics

Symbol	Parameter	Conditions		Min	Typ	Max	Unit
T_{sens}	CIU Temperature sensor threshold		[1]	100	125	140	°C

[1] Temperature sensor embedded in PN533 does not aim to monitor the temperature. It helps to prevent catastrophic failure avoiding destruction of the IC. In any case the application must ensure by other means that ambient temperature do not exceed 85 °C as specified in operating condition table.

All information provided in this document is subject to legal disclaimers.

© NXP B.V. 2017. All rights reserved.

13. Application information

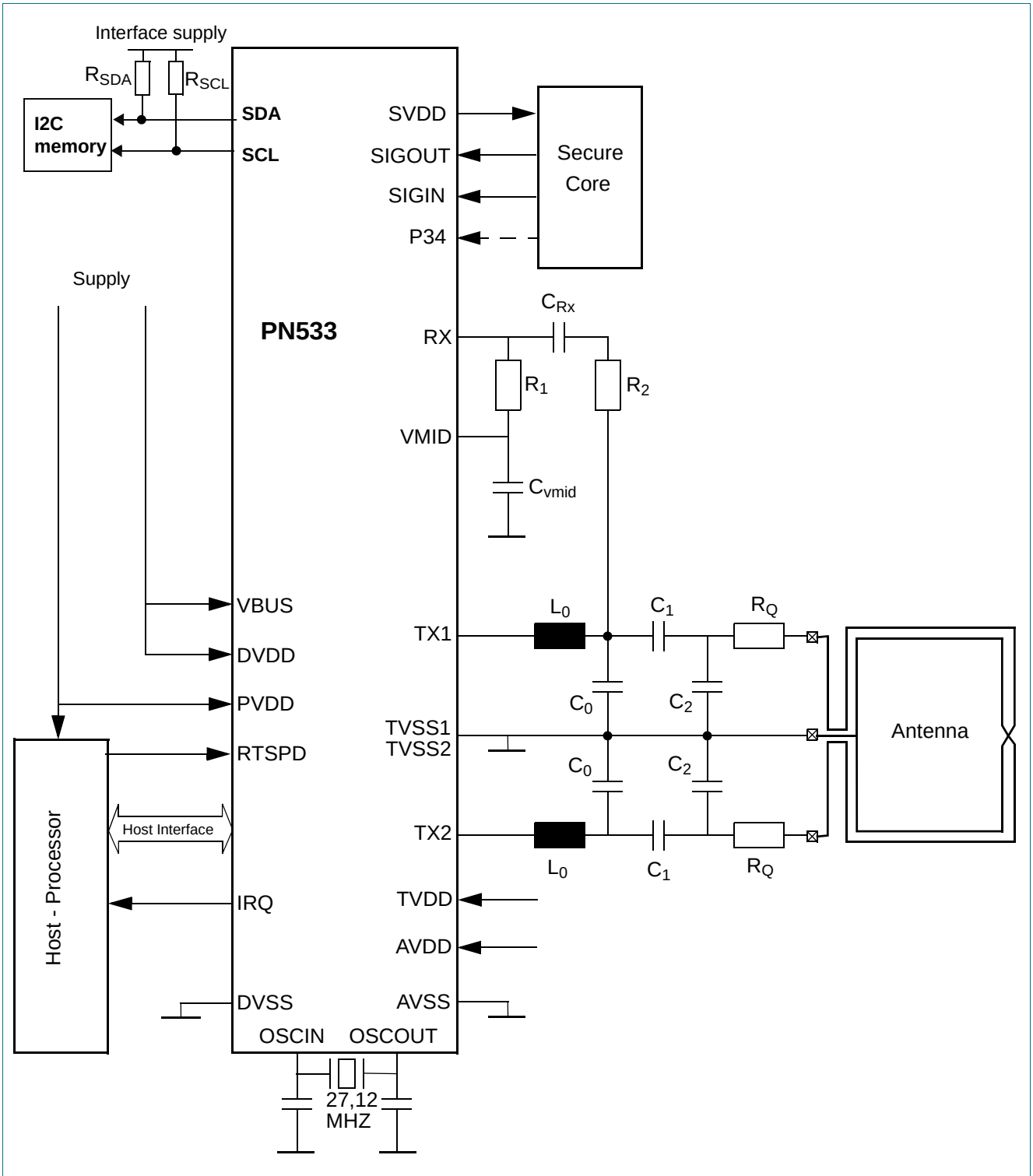

Fig 64. Application diagram of PN533

All information provided in this document is subject to legal disclaimers.

© NXP B.V. 2017. All rights reserved.

14. Package outline

HVQFN40: plastic thermal enhanced very thin quad flat package; no leads; 40 terminals; body 6 x 6 x 0.85 mm **SOT618-1**

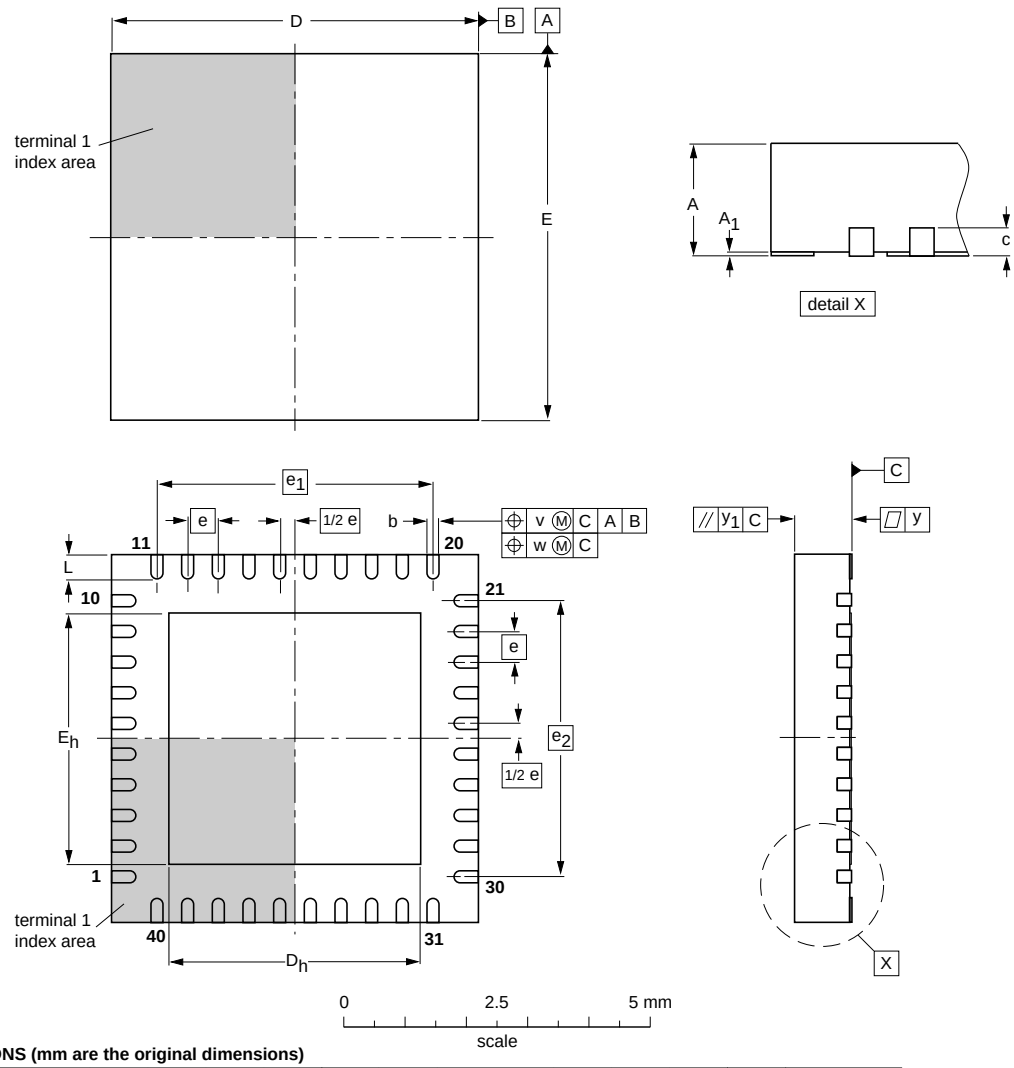

DIMENSIONS (mm are the original dimensions)

UNIT	A(1) max.	A_1	b	c	D(1)	D_h	E(1)	E_h	e	e_1	e_2	L	v	w	y	y_1
mm	1	0.05 0.00	0.30 0.18	0.2	6.1 5.9	4.25 3.95	6.1 5.9	4.25 3.95	0.5	4.5	4.5	0.5 0.3	0.1	0.05	0.05	0.1

Note

1. Plastic or metal protrusions of 0.075 mm maximum per side are not included.

OUTLINE VERSION	REFERENCES				EUROPEAN PROJECTION	ISSUE DATE
	IEC	JEDEC	JEITA			
SOT618-1	- - -	MO-220	- - -			~~01-08-08~~ 02-10-22

Fig 65. Package outline HVQFN40 (SOT618-1)

This package is MSL level 2.

All information provided in this document is subject to legal disclaimers.

© NXP B.V. 2017. All rights reserved.

15. Abbreviations

Table 325. Abbreviations

Acronym	Description
ASK	Amplitude Shift keying
CIU	Contactless interface Unit
HPD	Hard Power Down (see Section 8.5.6 on page 99)
HZ	High Impedance
Initiator	Generates RF field at 13.56 MHz and starts the NFCIP-1 communication.
Load modulation Index	The load modulation index is defined as the card's voltage ratio (Vmax - Vmin) / (Vmax + Vmin) measured at the card's coil.
Modulation Index	The modulation index is defined as the voltage ratio (Vmax - Vmin) / (Vmax + Vmin).
MSL	Moisture Sensitivity Level
PCD	Proximity Coupling Device. Definition for a Card Reader/ Writer according to the ISO/IEC 14443 Specification
PCR	Power Clock Reset controller
PICC	Proximity Cards. Definition for a contactless Smart Card according to the ISO/IEC 14443 specification
SAM	Secure Access Module
SIC	Secure Integrated Circuit (can be a Smart Card IC, a Secure Access Module (SAM),...)
SPI	Serial Parallel Interface
SPD	Soft Power Down mode (see Section 8.5.7 on page 99)
Target	Responds to initiator command either using load modulation scheme (RF field generated by Initiator) or using modulation of self-generated RF field (no RF field generated by initiator during target answer).

All information provided in this document is subject to legal disclaimers.

© NXP B.V. 2017. All rights reserved.

16. Revision history

Table 326. Revision history

Document ID	Release date	Data sheet status	Change notice	Supersedes
PN5331B3HN v. 3.3	20171129	Product data sheet	-	PN5331B3HN v. 3.3
Modiifcations:	• Security status changed into Company Pubic, no content change			
PN5331B3HN v. 3.3	20120927	Product data sheet	-	157531
Modiifcations:	• Section 17.4 “Licenses”: updated			
157531	20081210	Product data sheet		Rev. 3.0
Modiifcations:	• Table 146 “Communication overview for ISO/IEC 14443A/MIFARE Reader/Writer” on page 111 and Table 150 “Communication overview for ISO/IEC 14443B Reader/Writer” on page 114: - added 848 kbit/s baud rate			
157530	1 July 2008	Product data sheet		Rev. 1.0
157510	10 April 2008 • Initial version	Objective data sheet		

All information provided in this document is subject to legal disclaimers.

© NXP B.V. 2017. All rights reserved.

17. Legal information

17.1 Data sheet status

Document status[1][2]	Product status[3]	Definition
Objective [short] data sheet	Development	This document contains data from the objective specification for product development.
Preliminary [short] data sheet	Qualification	This document contains data from the preliminary specification.
Product [short] data sheet	Production	This document contains the product specification.

[1] Please consult the most recently issued document before initiating or completing a design.

[2] The term 'short data sheet' is explained in section "Definitions".

[3] The product status of device(s) described in this document may have changed since this document was published and may differ in case of multiple devices. The latest product status information is available on the Internet at URL http://www.nxp.com.

17.2 Definitions

Draft — The document is a draft version only. The content is still under internal review and subject to formal approval, which may result in modifications or additions. NXP Semiconductors does not give any representations or warranties as to the accuracy or completeness of information included herein and shall have no liability for the consequences of use of such information.

Short data sheet — A short data sheet is an extract from a full data sheet with the same product type number(s) and title. A short data sheet is intended for quick reference only and should not be relied upon to contain detailed and full information. For detailed and full information see the relevant full data sheet, which is available on request via the local NXP Semiconductors sales office. In case of any inconsistency or conflict with the short data sheet, the full data sheet shall prevail.

Product specification — The information and data provided in a Product data sheet shall define the specification of the product as agreed between NXP Semiconductors and its customer, unless NXP Semiconductors and customer have explicitly agreed otherwise in writing. In no event however, shall an agreement be valid in which the NXP Semiconductors product is deemed to offer functions and qualities beyond those described in the Product data sheet.

17.3 Disclaimers

Limited warranty and liability — Information in this document is believed to be accurate and reliable. However, NXP Semiconductors does not give any representations or warranties, expressed or implied, as to the accuracy or completeness of such information and shall have no liability for the consequences of use of such information. NXP Semiconductors takes no responsibility for the content in this document if provided by an information source outside of NXP Semiconductors.

In no event shall NXP Semiconductors be liable for any indirect, incidental, punitive, special or consequential damages (including - without limitation - lost profits, lost savings, business interruption, costs related to the removal or replacement of any products or rework charges) whether or not such damages are based on tort (including negligence), warranty, breach of contract or any other legal theory.

Notwithstanding any damages that customer might incur for any reason whatsoever, NXP Semiconductors' aggregate and cumulative liability towards customer for the products described herein shall be limited in accordance with the *Terms and conditions of commercial sale* of NXP Semiconductors.

Right to make changes — NXP Semiconductors reserves the right to make changes to information published in this document, including without limitation specifications and product descriptions, at any time and without notice. This document supersedes and replaces all information supplied prior to the publication hereof.

Suitability for use — NXP Semiconductors products are not designed, authorized or warranted to be suitable for use in life support, life-critical or safety-critical systems or equipment, nor in applications where failure or malfunction of an NXP Semiconductors product can reasonably be expected to result in personal injury, death or severe property or environmental damage. NXP Semiconductors and its suppliers accept no liability for inclusion and/or use of NXP Semiconductors products in such equipment or applications and therefore such inclusion and/or use is at the customer's own risk.

Applications — Applications that are described herein for any of these products are for illustrative purposes only. NXP Semiconductors makes no representation or warranty that such applications will be suitable for the specified use without further testing or modification.

Customers are responsible for the design and operation of their applications and products using NXP Semiconductors products, and NXP Semiconductors accepts no liability for any assistance with applications or customer product design. It is customer's sole responsibility to determine whether the NXP Semiconductors product is suitable and fit for the customer's applications and products planned, as well as for the planned application and use of customer's third party customer(s). Customers should provide appropriate design and operating safeguards to minimize the risks associated with their applications and products.

NXP Semiconductors does not accept any liability related to any default, damage, costs or problem which is based on any weakness or default in the customer's applications or products, or the application or use by customer's third party customer(s). Customer is responsible for doing all necessary testing for the customer's applications and products using NXP Semiconductors products in order to avoid a default of the applications and the products or of the application or use by customer's third party customer(s). NXP does not accept any liability in this respect.

Limiting values — Stress above one or more limiting values (as defined in the Absolute Maximum Ratings System of IEC 60134) will cause permanent damage to the device. Limiting values are stress ratings only and (proper) operation of the device at these or any other conditions above those given in the Recommended operating conditions section (if present) or the Characteristics sections of this document is not warranted. Constant or repeated exposure to limiting values will permanently and irreversibly affect the quality and reliability of the device.

Terms and conditions of commercial sale — NXP Semiconductors products are sold subject to the general terms and conditions of commercial sale, as published at http://www.nxp.com/profile/terms, unless otherwise agreed in a valid written individual agreement. In case an individual agreement is concluded only the terms and conditions of the respective agreement shall apply. NXP Semiconductors hereby expressly objects to applying the customer's general terms and conditions with regard to the purchase of NXP Semiconductors products by customer.

No offer to sell or license — Nothing in this document may be interpreted or construed as an offer to sell products that is open for acceptance or the grant, conveyance or implication of any license under any copyrights, patents or other industrial or intellectual property rights.

All information provided in this document is subject to legal disclaimers.

© NXP B.V. 2017. All rights reserved.

Export control — This document as well as the item(s) described herein may be subject to export control regulations. Export might require a prior authorization from competent authorities.

Quick reference data — The Quick reference data is an extract of the product data given in the Limiting values and Characteristics sections of this document, and as such is not complete, exhaustive or legally binding.

Non-automotive qualified products — Unless this data sheet expressly states that this specific NXP Semiconductors product is automotive qualified, the product is not suitable for automotive use. It is neither qualified nor tested in accordance with automotive testing or application requirements. NXP Semiconductors accepts no liability for inclusion and/or use of non-automotive qualified products in automotive equipment or applications.

In the event that customer uses the product for design-in and use in automotive applications to automotive specifications and standards, customer (a) shall use the product without NXP Semiconductors' warranty of the product for such automotive applications, use and specifications, and (b) whenever customer uses the product for automotive applications beyond NXP Semiconductors' specifications such use shall be solely at customer's own risk, and (c) customer fully indemnifies NXP Semiconductors for any liability, damages or failed product claims resulting from customer design and use of the product for automotive applications beyond NXP Semiconductors' standard warranty and NXP Semiconductors' product specifications.

Translations — A non-English (translated) version of a document is for reference only. The English version shall prevail in case of any discrepancy between the translated and English versions.

17.4 Licenses

Purchase of NXP ICs with ISO/IEC 14443 type B functionality

This NXP Semiconductors IC is ISO/IEC 14443 Type B software enabled and is licensed under Innovatron's Contactless Card patents license for ISO/IEC 14443 B.

The license includes the right to use the IC in systems and/or end-user equipment.

RATP/Innovatron Technology

Purchase of NXP ICs with NFC technology

Purchase of an NXP Semiconductors IC that complies with one of the Near Field Communication (NFC) standards ISO/IEC 18092 and ISO/IEC 21481 does not convey an implied license under any patent right infringed by implementation of any of those standards. Purchase of NXP Semiconductors IC does not include a license to any NXP patent (or other IP right) covering combinations of those products with other products, whether hardware or software.

17.5 Trademarks

Notice: All referenced brands, product names, service names and trademarks are the property of their respective owners.

MIFARE — is a trademark of NXP B.V.

I²C-bus — logo is a trademark of NXP B.V.

18. Contact information

For more information, please visit: **http://www.nxp.com**

For sales office addresses, please send an email to: **salesaddresses@nxp.com**

All information provided in this document is subject to legal disclaimers.

© NXP B.V. 2017. All rights reserved.

19. Contents

1 General description . . . 1
2 Features and benefits . . . 3
3 Applications . . . 4
4 Quick reference data . . . 4
5 Ordering information . . . 5
6 Block diagram . . . 5
7 Pinning information . . . 6
7.1 Pinning . . . 6
7.2 Pin description . . . 7
8 Functional description . . . 9
8.1 80C51 . . . 9
8.1.1 PN533 memory map . . . 10
8.1.2 Data memory . . . 11
8.1.2.1 IDATA memory . . . 11
8.1.2.2 XRAM memory . . . 13
8.1.3 Program memory . . . 14
8.1.4 PCON module . . . 15
8.1.5 Interrupt Controller . . . 15
8.1.5.1 Interrupt vectors . . . 15
8.1.5.2 Interrupt enable: IE0 and IE1 registers . . . 16
8.1.5.3 Interrupt prioritization: IP0 and IP1 registers . 17
8.1.5.4 General purpose IRQ control . . . 19
8.1.6 Timer0/1 description . . . 20
8.1.6.1 Timer0/1 registers . . . 21
8.1.6.2 T01CON register . . . 22
8.1.6.3 T01MOD register . . . 23
8.1.6.4 T0L and T0H registers . . . 24
8.1.6.5 T1L and T1H registers . . . 25
8.1.6.6 Incrementer . . . 25
8.1.6.7 Overflow detection . . . 26
8.1.7 Timer2 description . . . 26
8.1.7.1 Timer2 registers . . . 26
8.1.7.2 T2CON register . . . 27
8.1.7.3 T2MOD register . . . 28
8.1.7.4 T2L, T2H registers . . . 29
8.1.7.5 RCAP2L, RCAP2H registers . . . 29
8.1.8 Debug UART . . . 30
8.1.8.1 Feature list . . . 30
8.1.8.2 Debug UART functional description . . . 30
8.1.8.3 S0CON register . . . 32
8.1.8.4 S0BUF register . . . 34
8.1.8.5 Mode 0 baud rate . . . 34
8.1.8.6 Mode 2 baud rate . . . 34
8.1.8.7 Mode 1 and 3 baud rates . . . 35
8.1.8.8 Baud rates using Timer1 (Debug UART mode 1 and 3) . . . 35
8.1.8.9 Baud rates using Timer2 (Debug UART mode 1 and 3) . . . 37
8.2 General purpose IOs configurations . . . 37
8.2.1 Pad configurations description . . . 39
8.2.1.1 Open-drain . . . 39
8.2.1.2 Quasi Bidirectional . . . 40
8.2.1.3 Input . . . 41
8.2.1.4 Push-pull output . . . 42
8.2.2 GPIO registers description . . . 43
8.2.2.1 P7CFGA register . . . 43
8.2.2.2 P7CFGB register . . . 43
8.2.2.3 P7 register . . . 43
8.2.2.4 P3CFGA register . . . 44
8.2.2.5 P3CFGB register . . . 44
8.2.2.6 P3 register . . . 45
8.2.2.7 P5 register . . . 46
8.3 Host interfaces . . . 46
8.3.1 MATX description . . . 47
8.3.1.1 MATX register . . . 47
8.3.1.2 Pads NSS/P50_SCL/HSU_RX and MOSI/SDA / HSU_TX . . . 47
8.3.2 I^2C interface . . . 48
8.3.2.1 I^2C functional description . . . 48
8.3.2.2 Master transmitter mode . . . 49
8.3.2.3 Master receiver mode . . . 50
8.3.2.4 I^2CCON register . . . 50
8.3.2.5 I^2CSTA register . . . 54
8.3.2.6 I^2CDAT register . . . 58
8.3.2.7 I^2CADR register . . . 59
8.3.2.8 I^2C_wu_control register . . . 59
8.3.3 FIFO manager . . . 60
8.3.3.1 FIFO manager functional description . . . 60
8.3.3.2 RWL register . . . 61
8.3.3.3 TWL register . . . 61
8.3.3.4 FIFOFS register . . . 62
8.3.3.5 FIFOFF register . . . 62
8.3.3.6 SFF register . . . 63
8.3.3.7 FIT register . . . 64
8.3.3.8 FITEN register . . . 65
8.3.3.9 FDATA register . . . 66
8.3.3.10 FSIZE register . . . 66
8.3.4 High Speed UART (HSU) . . . 67
8.3.4.1 Mode of operation . . . 69
8.3.4.2 HSU Baud rate generator . . . 69
8.3.4.3 HSU preamble filter . . . 69
8.3.4.4 HSU wake-up generator . . . 69
8.3.4.5 HSU_STA register . . . 70
8.3.4.6 HSU_CTR register . . . 71

continued >>

All information provided in this document is subject to legal disclaimers.

© NXP B.V. 2017. All rights reserved.

8.3.4.7 HSU_PRE register 72
8.3.4.8 HSU_CNT register 72
8.3.5 USB 73
8.3.5.1 Features list 73
8.3.5.2 USB interrupt 73
8.3.5.3 Resume by host 74
8.3.5.4 Remote wake up. 75
8.3.5.5 Softconnect. 76
8.3.5.6 USB embedded firmware view 77
8.4 Power management 89
8.4.1 USB bus powered. 89
8.4.2 USB non bus powered 90
8.4.3 HOST powered (single source) 90
8.4.4 HOST powered (double source). 91
8.4.5 Low power modes 92
8.4.6 Power-on reset 92
8.4.7 Regulator - short description 93
8.4.8 Main switch. 93
8.4.9 SVDD switch. 94
8.5 Power clock and reset controller. 95
8.5.1 PCR in the system 95
8.5.2 27.12 MHz crystal oscillator 97
8.5.3 PLL for USB clock generation 97
8.5.4 Power-up sequence 98
8.5.5 Low power modes 98
8.5.6 Reset modes 99
8.5.7 Soft-Power-down mode (SPD) 99
8.5.8 Suspend mode 100
8.5.9 Remote wake-up 101
8.5.10 PCR extension registers 102
8.5.11 PCR register description. 102
8.5.11.1 CFR register 102
8.5.11.2 CER register 103
8.5.11.3 ILR register 104
8.5.11.4 PCR Control register 105
8.5.11.5 PCR Status register 106
8.5.11.6 Wakeupen register 107
8.6 Contactless Interface Unit (CIU). 108
8.6.1 Feature list 109
8.6.2 Simplified block diagram. 110
8.6.3 Reader/Writer modes 111
8.6.3.1 ISO/IEC 14443A Reader/Writer 111
8.6.3.2 FeliCa Reader/Writer 113
8.6.3.3 ISO/IEC 14443B Reader/Writer 114
8.6.4 ISO/IEC 18092, ECMA 340 NFCIP-1 operating mode. 115
8.6.4.1 ACTIVE Communication mode. 116
8.6.4.2 PASSIVE Communication mode. 117
8.6.4.3 NFCIP-1 framing and coding 118
8.6.4.4 NFCIP-1 protocol support. 118
8.6.5 Card operating modes 119
8.6.5.1 ISO/IEC 14443A/MIFARE card operating mode . 119
8.6.5.2 FeliCa Card operating mode 121
8.6.6 Overall CIU block diagram. 121
8.6.7 Transmitter control 123
8.6.8 RF level detector 126
8.6.9 Antenna presence self test 127
8.6.9.1 Principle 127
8.6.9.2 Antenna presence detector register. 128
8.6.10 Random generator. 129
8.6.11 Data mode detector 130
8.6.12 Serial data switch. 131
8.6.12.1 Serial data switch for driver and loadmod . . 131
8.6.13 NFC-WI/S^{2}C interface support. 133
8.6.13.1 Signal shape for FeliCa NFC-WI/S^{2}C interface support. 134
8.6.13.2 Signal shape for ISO/IEC14443A and MIFARE NFC-WI/S^{2}C support 135
8.6.13.3 NFC-WI/S^{2}C initiator mode 136
8.6.14 Hardware support for FeliCa and NFC polling. 136
8.6.14.1 Polling sequence functionality for initiator . . 136
8.6.14.2 Polling sequence functionality for target . . . 137
8.6.14.3 Additional hardware support for FeliCa and NFC 137
8.6.15 CRC co-processor 138
8.6.16 FIFO buffer. 138
8.6.16.1 Accessing the FIFO buffer 138
8.6.16.2 Controlling the FIFO buffer 138
8.6.16.3 Status information about the FIFO buffer. . . 139
8.6.17 CIU_timer 140
8.6.18 Interrupt request system 141
8.6.18.1 Interrupt sources 141
8.6.19 CIU Power Reduction Modes. 142
8.6.19.1 Hard-Power-down 142
8.6.19.2 CIU Power-down 142
8.6.19.3 Transmitter Power-down 143
8.6.20 CIU command set 143
8.6.20.1 General description 143
8.6.20.2 General behaviour 143
8.6.20.3 Commands overview 144
8.6.20.4 Idle command 144
8.6.20.5 Config command 145
8.6.20.6 Generate RandomID command. 145
8.6.20.7 CalcCRC command 145
8.6.20.8 Transmit command 146
8.6.20.9 NoCmdChange command 146
8.6.20.10 Receive command 146
8.6.20.11 Transceive command. 146
8.6.20.12 AutoColl command. 147
8.6.20.13 MFAuthent command. 149

continued >>

All information provided in this document is subject to legal disclaimers.

© NXP B.V. 2017. All rights reserved.

8.6.20.14 SoftReset command 149
8.6.21 CIU tests signals 150
8.6.21.1 CIU self-test 150
8.6.21.2 CIU test bus 151
8.6.21.3 Test signals at pin AUX 152
8.6.21.4 PRBS 152
8.6.22 CIU memory map 153
8.6.23 CIU register description 155
8.6.23.1 CIU register bit behaviour 155
8.6.23.2 CIU_SIC_CLK_en register (6330h) 155
8.6.23.3 CIU_Command register (D1h or 6331h) 156
8.6.23.4 CIU_CommIEn register (D2h or 6332h) 157
8.6.23.5 CIU_DivIEn register (D3h or 6333h) 157
8.6.23.6 CIU_CommIrq register (D4h or 6334h) 158
8.6.23.7 CIU_DivIrq register (D5h or 6335h) 159
8.6.23.8 CIU_Error register (D6h or 6336h) 160
8.6.23.9 CIU_Status1 register (DFh or 6337h) 161
8.6.23.10 CIU_Status2 register (E9h or 6338h) 162
8.6.23.11 CIU_FIFOData register (EAh or 6339h) 163
8.6.23.12 CIU_FIFOLevel register (EBh or 633Ah) . . . 163
8.6.23.13 CIU_WaterLevel register (ECh or 633Bh) . . 164
8.6.23.14 CIU_Control register (EDh or 633Ch) 164
8.6.23.15 CIU_BitFraming register (EEh or 633Dh) . . . 165
8.6.23.16 CIU_Coll register (EFh or 633Eh) 166
8.6.23.17 CIU_Mode register (6301h) 167
8.6.23.18 CIU_TxMode register (6302h) 168
8.6.23.19 CIU_RxMode register (6303h) 169
8.6.23.20 CIU_TxControl register (6304h) 170
8.6.23.21 CIU_TxAuto register (6305h) 171
8.6.23.22 CIU_TxSel register (6306h) 172
8.6.23.23 CIU_RxSel register (6307h) 173
8.6.23.24 CIU_RxThreshold register (6308h) 174
8.6.23.25 CIU_Demod register (6309h) 174
8.6.23.26 CIU_FelNFC1 register (630Ah) 175
8.6.23.27 CIU_FelNFC2 register (630Bh) 176
8.6.23.28 CIU_MifNFC register (630Ch) 177
8.6.23.29 CIU_ManualRCV register (630Dh) 178
8.6.23.30 CIU_TypeB register (630Eh) 180
8.6.23.31 CIU_CRCResultMSB register (6311h) 181
8.6.23.32 CIU_CRCResultLSB register (6312h) 181
8.6.23.33 CIU_GsNOff register (6313h) 182
8.6.23.34 CIU_ModWidth register (6314h) 183
8.6.23.35 CIU_TxBitPhase register (6315h) 184
8.6.23.36 CIU_RFCfg register (6316h) 185
8.6.23.37 CIU_GsNOn register (6317h) 186
8.6.23.38 CIU_CWGsP register (6318h) 187
8.6.23.39 CIU_ModGsP register (6319h) 187
8.6.23.40 CIU_TMode register (631Ah) 188
8.6.23.41 CIU_TPrescaler register (631Bh) 189
8.6.23.42 CIU_TReload_hi register (631Ch) 189
8.6.23.43 CIU_TReloadVal_lo register (631Dh) 190
8.6.23.44 CIU_TCounterVal_hi register (631Eh) 190
8.6.23.45 Register CIU_TCounterVal_lo (631Fh) 190
8.6.23.46 CIU_TestSel1 register (6321h) 191
8.6.23.47 CIU_TestSel2 register (6322h) 192
8.6.23.48 CIU_TestPinEn register (6323h) 192
8.6.23.49 CIU_TestPinValue register (6324h) 193
8.6.23.50 CIU_TestBus register (6325h) 193
8.6.23.51 CIU_AutoTest register (6326h) 194
8.6.23.52 CIU_Version register (6327h) 194
8.6.23.53 CIU_AnalogTest register (6328h) 195
8.6.23.54 CIU_TestDAC1 register (6329h) 197
8.6.23.55 CIU_TestDAC2 register (632Ah) 197
8.6.23.56 CIU_TestADC register (632Bh) 197
8.6.23.57 CIU_RFlevelDet register (632Fh) 198
8.7 Registers map 199
8.7.1 Standard registers 199
8.7.2 SFR registers 201
9 Limiting values 203
10 Recommended operating conditions 204
11 Thermal characteristics 204
12 Characteristics 205
12.1 Power management characteristics 205
12.1.1 Current consumption characteristics 205
12.1.2 Voltage regulator characteristics 206
12.2 Antenna presence self test thresholds 206
12.3 Typical 27.12 MHz Crystal requirements . . . 207
12.4 Pin characteristics for 27.12 MHz XTAL Oscillator (OSCIN, OSCOUT) 207
12.5 RSTPD_N input pin characteristics 208
12.6 Input pin characteristics for I0, I1 and TESTEN 208
12.7 RSTOUT_N output pin characteristics 209
12.8 Input/output characteristics for pin P70_IRQ 210
12.9 Input/output pin characteristics for P30 / UART_RX, P31 / UART_TX, P32_INT0, P33_INT1 211
12.10 Input/output pin characteristics for P35 212
12.11 Input/output pin characteristics for DP and DM 213
12.12 Input pin characteristics for SCL 216
12.13 Input/output pin characteristics for SDA . . . 216
12.14 Output pin characteristics for Delatt 217
12.15 Input pin characteristics for SIGIN 217
12.16 Output pin characteristics for SIGOUT 217
12.17 Input/output pin characteristics for P34 218
12.18 Output pin characteristics for LOADMOD . . 218
12.19 Input pin characteristics for RX 219
12.20 Output pin characteristics for AUX1/AUX2 . 220
12.21 Output pin characteristics for TX1/TX2 221
12.22 Timing for Reset 222

continued >>

All information provided in this document is subject to legal disclaimers.

© NXP B.V. 2017. All rights reserved.

12.23 Timing for the I²C interface 223
12.24 Temperature sensor 224
13 Application information. 225
14 Package outline 226
15 Abbreviations 227
16 Revision history 228
17 Legal information. 229
17.1 Data sheet status 229
17.2 Definitions 229
17.3 Disclaimers 229
17.4 Licenses 230
17.5 Trademarks. 230
18 Contact information. 230
19 Contents 231

Please be aware that important notices concerning this document and the product(s) described herein, have been included in section ‘Legal information’.

© NXP B.V. 2017. **All rights reserved.**

For more information, please visit: http://www.nxp.com
For sales office addresses, please send an email to: salesaddresses@nxp.com

Date of release: 29 November 2017
157534