PIC16F87XA

28/40/44-Pin Enhanced Flash Microcontrollers

Devices Included in this Data Sheet:

- PIC16F873A
- PIC16F874A
- PIC16F876A
- PIC16F877A

High-Performance RISC CPU:

- Only 35 single-word instructions to learn
- All single-cycle instructions except for program branches, which are two-cycle
- Operating speed: DC – 20 MHz clock input
  DC – 200 ns instruction cycle
- Up to 8K x 14 words of Flash Program Memory,
  Up to 368 x 8 bytes of Data Memory (RAM),
  Up to 256 x 8 bytes of EEPROM Data Memory
- Pinout compatible to other 28-pin or 40/44-pin PIC16CXXX and PIC16FXXX microcontrollers

Peripheral Features:

- Timer0: 8-bit timer/counter with 8-bit prescaler
- Timer1: 16-bit timer/counter with prescaler, can be incremented during Sleep via external crystal/clock
- Timer2: 8-bit timer/counter with 8-bit period register, prescaler and postscaler
- Two Capture, Compare, PWM modules
  - Capture is 16-bit, max. resolution is 12.5 ns
  - Compare is 16-bit, max. resolution is 200 ns
  - PWM max. resolution is 10-bit
- Synchronous Serial Port (SSP) with SPI (Master mode) and I^2C™ (Master/Slave)
- Universal Synchronous Asynchronous Receiver Transmitter (USART/SCI) with 9-bit address detection
- Parallel Slave Port (PSP) – 8 bits wide with external $\overline{RD}$, $\overline{WR}$ and $\overline{CS}$ controls (40/44-pin only)
- Brown-out detection circuitry for Brown-out Reset (BOR)

Analog Features:

- 10-bit, up to 8-channel Analog-to-Digital Converter (A/D)
- Brown-out Reset (BOR)
- Analog Comparator module with:
  - Two analog comparators
  - Programmable on-chip voltage reference (VREF) module
  - Programmable input multiplexing from device inputs and internal voltage reference
  - Comparator outputs are externally accessible

Special Microcontroller Features:

- 100,000 erase/write cycle Enhanced Flash program memory typical
- 1,000,000 erase/write cycle Data EEPROM memory typical
- Data EEPROM Retention > 40 years
- Self-reprogrammable under software control
- In-Circuit Serial Programming™ (ICSP™) via two pins
- Single-supply 5V In-Circuit Serial Programming
- Watchdog Timer (WDT) with its own on-chip RC oscillator for reliable operation
- Programmable code protection
- Power saving Sleep mode
- Selectable oscillator options
- In-Circuit Debug (ICD) via two pins

CMOS Technology:

- Low-power, high-speed Flash/EEPROM technology
- Fully static design
- Wide operating voltage range (2.0V to 5.5V)
- Commercial and Industrial temperature ranges
- Low-power consumption

Device	Program Memory		Data SRAM (Bytes)	EEPROM (Bytes)	I/O	10-bit A/D (ch)	CCP (PWM)	MSSP		USART	Timers 8/16-bit	Comparators
	Bytes	# Single Word Instructions						SPI	Master I^2C			
PIC16F873A	7.2K	4096	192	128	22	5	2	Yes	Yes	Yes	2/1	2
PIC16F874A	7.2K	4096	192	128	33	8	2	Yes	Yes	Yes	2/1	2
PIC16F876A	14.3K	8192	368	256	22	5	2	Yes	Yes	Yes	2/1	2
PIC16F877A	14.3K	8192	368	256	33	8	2	Yes	Yes	Yes	2/1	2

© 2001-2013 Microchip Technology Inc.

Pin Diagrams

28-Pin PDIP, SOIC, SSOP

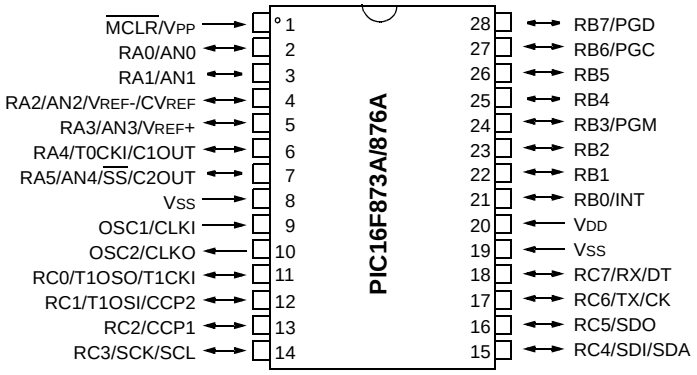

28-Pin QFN

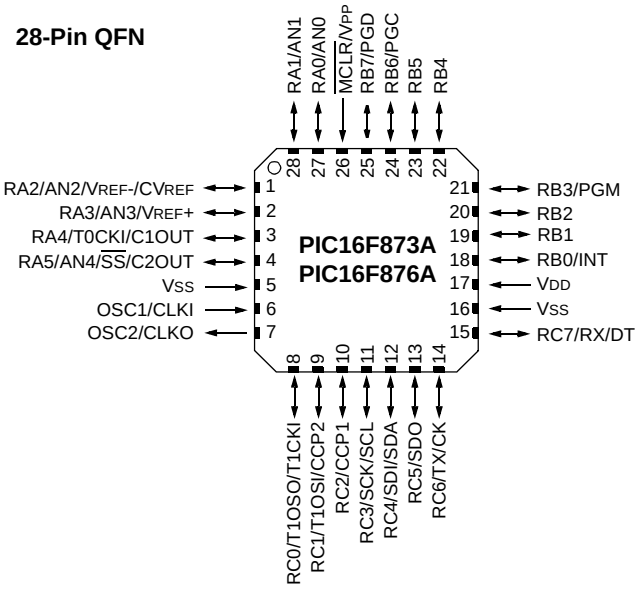

44-Pin QFN

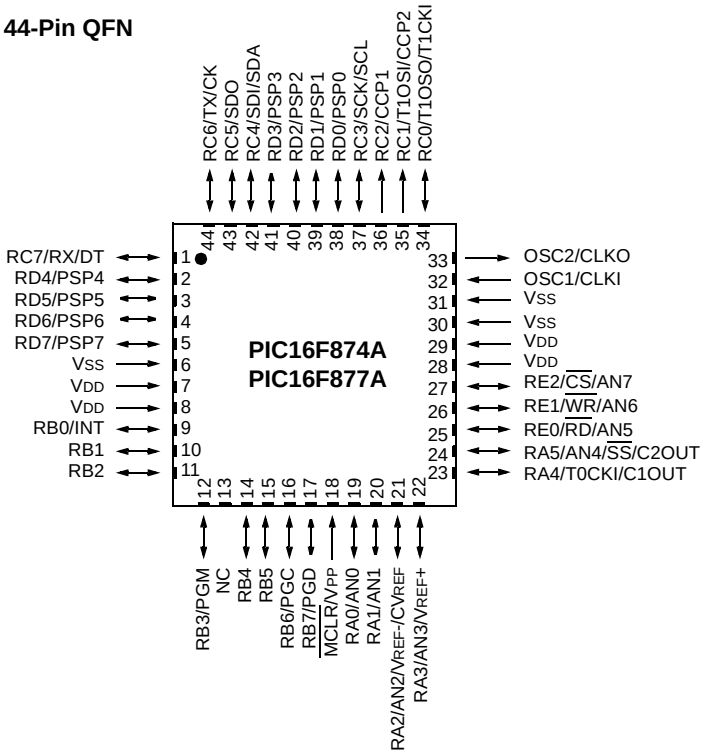

© 2001-2013 Microchip Technology Inc.

Pin Diagrams (Continued)

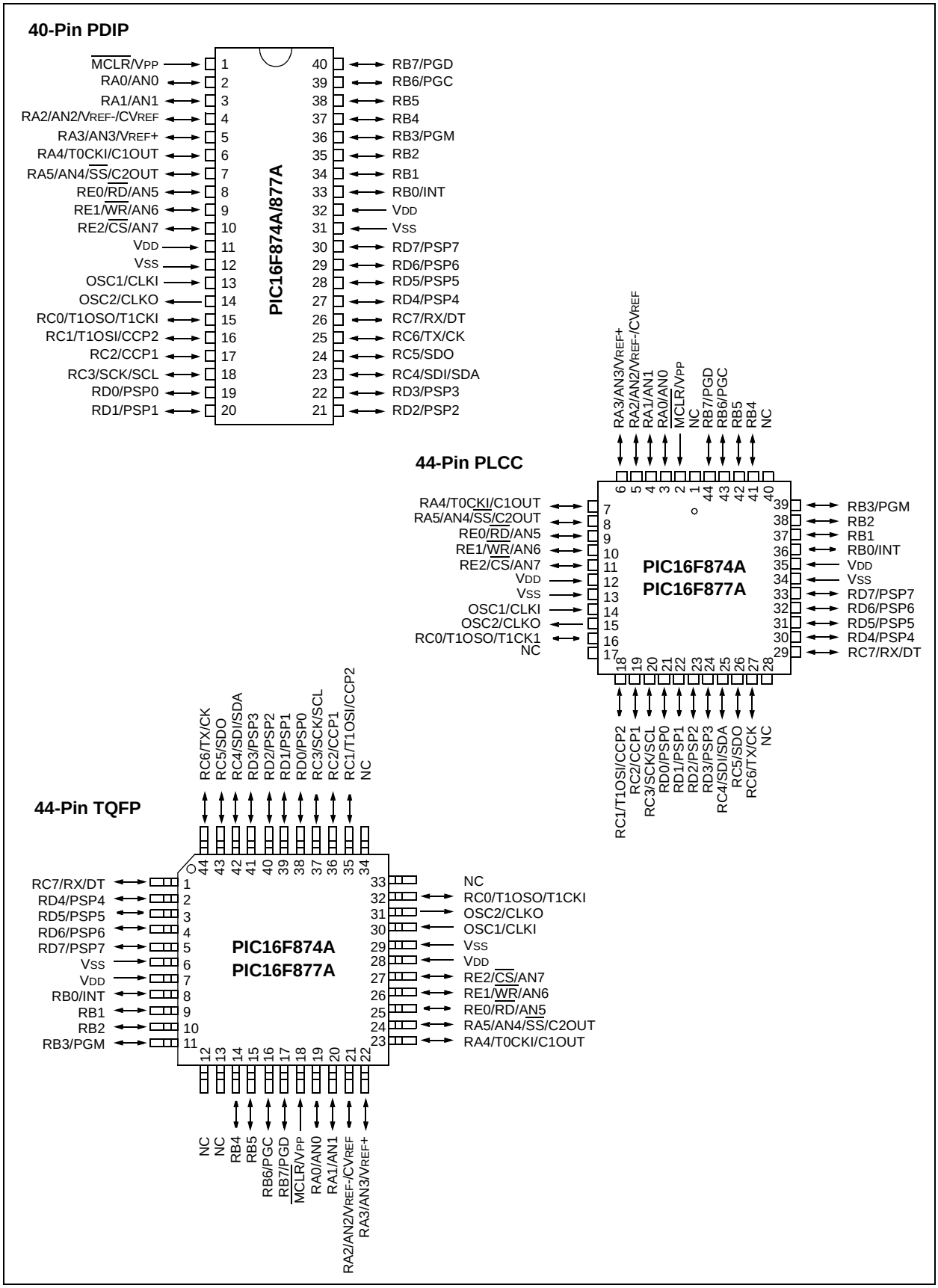

Table of Contents

1.0 Device Overview 5
2.0 Memory Organization 15
3.0 Data EEPROM and Flash Program Memory 33
4.0 I/O Ports 41
5.0 Timer0 Module 53
6.0 Timer1 Module 57
7.0 Timer2 Module 61
8.0 Capture/Compare/PWM Modules 63
9.0 Master Synchronous Serial Port (MSSP) Module 71
10.0 Addressable Universal Synchronous Asynchronous Receiver Transmitter (USART) 111
11.0 Analog-to-Digital Converter (A/D) Module 127
12.0 Comparator Module 135
13.0 Comparator Voltage Reference Module 141
14.0 Special Features of the CPU 143
15.0 Instruction Set Summary 159
16.0 Development Support 167
17.0 Electrical Characteristics 173
18.0 DC and AC Characteristics Graphs and Tables 197
19.0 Packaging Information 209
Appendix A: Revision History 219
Appendix B: Device Differences 219
Appendix C: Conversion Considerations 220
Index 221
On-Line Support 229
Systems Information and Upgrade Hot Line 229
Reader Response 230
PIC16F87XA Product Identification System 231

TO OUR VALUED CUSTOMERS

It is our intention to provide our valued customers with the best documentation possible to ensure successful use of your Microchip products. To this end, we will continue to improve our publications to better suit your needs. Our publications will be refined and enhanced as new volumes and updates are introduced.

If you have any questions or comments regarding this publication, please contact the Marketing Communications Department via E-mail at **docerrors@mail.microchip.com** or fax the **Reader Response Form** in the back of this data sheet to (480) 792-4150. We welcome your feedback.

Most Current Data Sheet

To obtain the most up-to-date version of this data sheet, please register at our Worldwide Web site at:

http://www.microchip.com

You can determine the version of a data sheet by examining its literature number found on the bottom outside corner of any page. The last character of the literature number is the version number, (e.g., DS30000A is version A of document DS30000).

Errata

An errata sheet, describing minor operational differences from the data sheet and recommended workarounds, may exist for current devices. As device/documentation issues become known to us, we will publish an errata sheet. The errata will specify the revision of silicon and revision of document to which it applies.

To determine if an errata sheet exists for a particular device, please check with one of the following:

- Microchip's Worldwide Web site; http://www.microchip.com
- Your local Microchip sales office (see last page)
- The Microchip Corporate Literature Center; U.S. FAX: (480) 792-7277

When contacting a sales office or the literature center, please specify which device, revision of silicon and data sheet (include literature number) you are using.

Customer Notification System

Register on our Web site at **www.microchip.com/cn** to receive the most current information on all of our products.

© 2001-2013 Microchip Technology Inc.

1.0 DEVICE OVERVIEW

This document contains device specific information about the following devices:

- PIC16F873A
- PIC16F874A
- PIC16F876A
- PIC16F877A

PIC16F873A/876A devices are available only in 28-pin packages, while PIC16F874A/877A devices are available in 40-pin and 44-pin packages. All devices in the PIC16F87XA family share common architecture with the following differences:

- The PIC16F873A and PIC16F874A have one-half of the total on-chip memory of the PIC16F876A and PIC16F877A
- The 28-pin devices have three I/O ports, while the 40/44-pin devices have five
- The 28-pin devices have fourteen interrupts, while the 40/44-pin devices have fifteen
- The 28-pin devices have five A/D input channels, while the 40/44-pin devices have eight
- The Parallel Slave Port is implemented only on the 40/44-pin devices

The available features are summarized in Table 1-1. Block diagrams of the PIC16F873A/876A and PIC16F874A/877A devices are provided in Figure 1-1 and Figure 1-2, respectively. The pinouts for these device families are listed in Table 1-2 and Table 1-3.

Additional information may be found in the PIC® Mid-Range Reference Manual (DS33023), which may be obtained from your local Microchip Sales Representative or downloaded from the Microchip web site. The Reference Manual should be considered a complementary document to this data sheet and is highly recommended reading for a better understanding of the device architecture and operation of the peripheral modules.

TABLE 1-1: PIC16F87XA DEVICE FEATURES

Key Features	PIC16F873A	PIC16F874A	PIC16F876A	PIC16F877A
Operating Frequency	DC – 20 MHz	DC – 20 MHz	DC – 20 MHz	DC – 20 MHz
Resets (and Delays)	POR, BOR (PWRT, OST)	POR, BOR (PWRT, OST)	POR, BOR (PWRT, OST)	POR, BOR (PWRT, OST)
Flash Program Memory (14-bit words)	4K	4K	8K	8K
Data Memory (bytes)	192	192	368	368
EEPROM Data Memory (bytes)	128	128	256	256
Interrupts	14	15	14	15
I/O Ports	Ports A, B, C	Ports A, B, C, D, E	Ports A, B, C	Ports A, B, C, D, E
Timers	3	3	3	3
Capture/Compare/PWM modules	2	2	2	2
Serial Communications	MSSP, USART	MSSP, USART	MSSP, USART	MSSP, USART
Parallel Communications	—	PSP	—	PSP
10-bit Analog-to-Digital Module	5 input channels	8 input channels	5 input channels	8 input channels
Analog Comparators	2	2	2	2
Instruction Set	35 Instructions	35 Instructions	35 Instructions	35 Instructions
Packages	28-pin PDIP 28-pin SOIC 28-pin SSOP 28-pin QFN	40-pin PDIP 44-pin PLCC 44-pin TQFP 44-pin QFN	28-pin PDIP 28-pin SOIC 28-pin SSOP 28-pin QFN	40-pin PDIP 44-pin PLCC 44-pin TQFP 44-pin QFN

© 2001-2013 Microchip Technology Inc.

FIGURE 1-1: PIC16F873A/876A BLOCK DIAGRAM

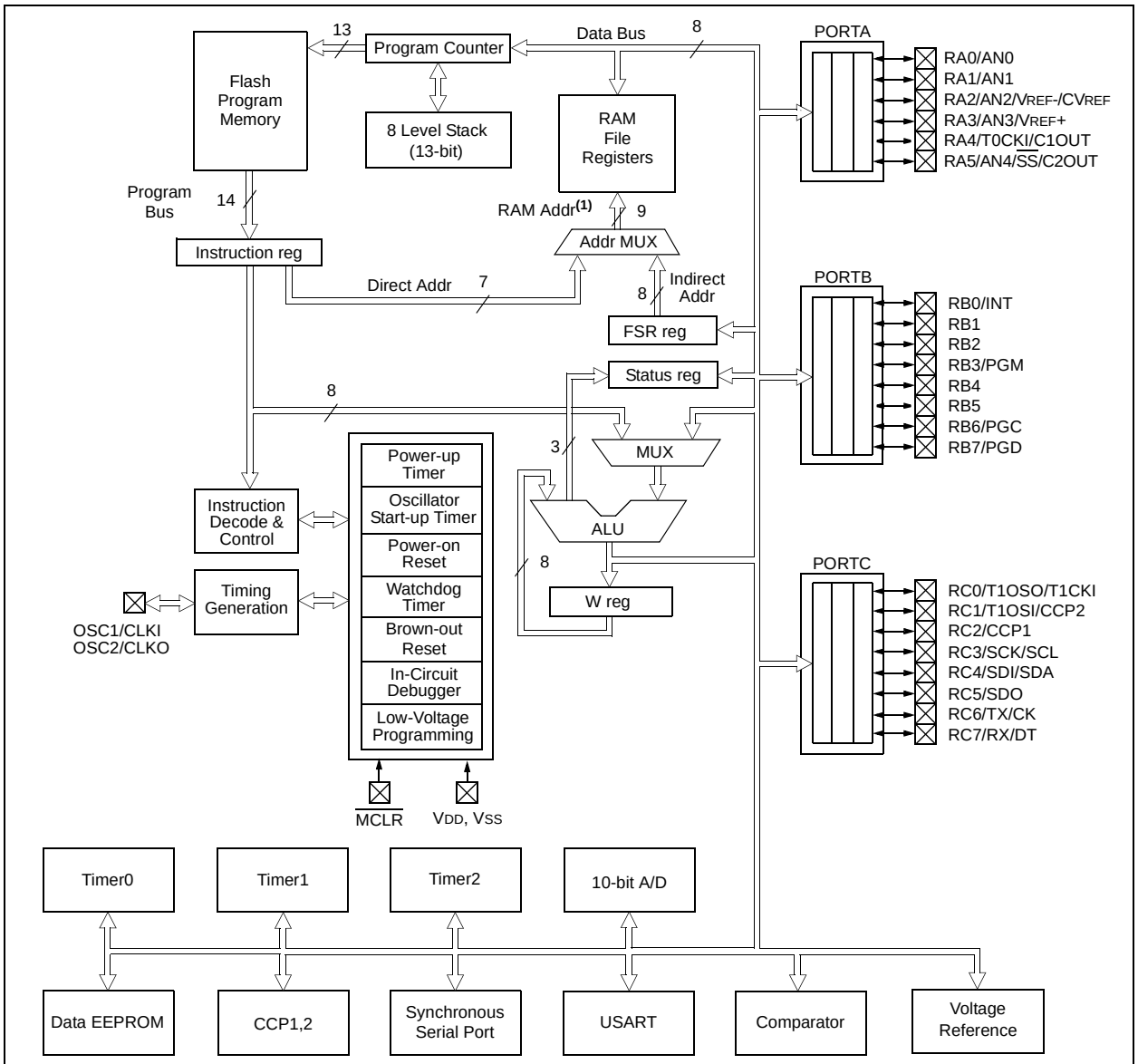

Device	Program Flash	Data Memory	Data EEPROM
PIC16F873A	4K words	192 Bytes	128 Bytes
PIC16F876A	8K words	368 Bytes	256 Bytes

Note 1: Higher order bits are from the Status register.

© 2001-2013 Microchip Technology Inc.

FIGURE 1-2: PIC16F874A/877A BLOCK DIAGRAM

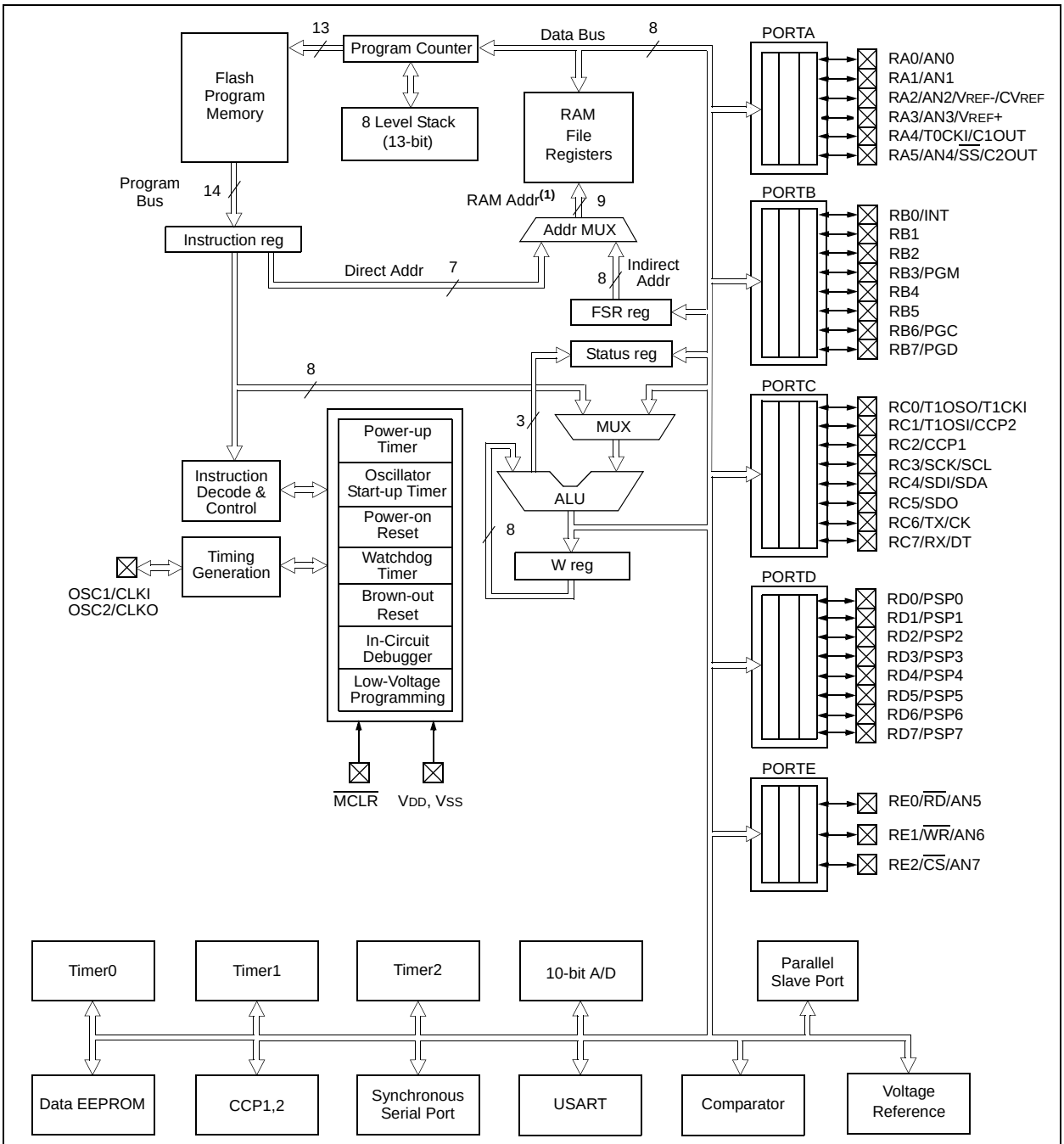

Device	Program Flash	Data Memory	Data EEPROM
PIC16F874A	4K words	192 Bytes	128 Bytes
PIC16F877A	8K words	368 Bytes	256 Bytes

Note 1: Higher order bits are from the Status register.

TABLE 1-2: PIC16F873A/876A PINOUT DESCRIPTION

Pin Name	PDIP, SOIC, SSOP Pin#	QFN Pin#	I/O/P Type	Buffer Type	Description
OSC1/CLKI	9	6		ST/CMOS(3)	Oscillator crystal or external clock input.
OSC1			I		Oscillator crystal input or external clock source input. ST buffer when configured in RC mode; otherwise CMOS.
CLKI			I		External clock source input. Always associated with pin function OSC1 (see OSC1/CLKI, OSC2/CLKO pins).
OSC2/CLKO	10	7		—	Oscillator crystal or clock output.
OSC2			O		Oscillator crystal output. Connects to crystal or resonator in Crystal Oscillator mode.
CLKO			O		In RC mode, OSC2 pin outputs CLKO, which has 1/4 the frequency of OSC1 and denotes the instruction cycle rate.
$\overline{MCLR}$/VPP	1	26		ST	Master Clear (input) or programming voltage (output).
$\overline{MCLR}$			I		Master Clear (Reset) input. This pin is an active low Reset to the device.
VPP			P		Programming voltage input.
					PORTA is a bidirectional I/O port.
RA0/AN0	2	27		TTL	
RA0			I/O		Digital I/O.
AN0			I		Analog input 0.
RA1/AN1	3	28		TTL	
RA1			I/O		Digital I/O.
AN1			I		Analog input 1.
RA2/AN2/VREF-/CVREF	4	1		TTL	
RA2			I/O		Digital I/O.
AN2			I		Analog input 2.
VREF-			I		A/D reference voltage (Low) input.
CVREF			O		Comparator VREF output.
RA3/AN3/VREF+	5	2		TTL	
RA3			I/O		Digital I/O.
AN3			I		Analog input 3.
VREF+			I		A/D reference voltage (High) input.
RA4/T0CKI/C1OUT	6	3		ST	
RA4			I/O		Digital I/O – Open-drain when configured as output.
T0CKI			I		Timer0 external clock input.
C1OUT			O		Comparator 1 output.
RA5/AN4/$\overline{SS}$/C2OUT	7	4		TTL	
RA5			I/O		Digital I/O.
AN4			I		Analog input 4.
$\overline{SS}$			I		SPI slave select input.
C2OUT			O		Comparator 2 output.

Legend: I = input O = output I/O = input/output P = power
— = Not used TTL = TTL input ST = Schmitt Trigger input

Note 1: This buffer is a Schmitt Trigger input when configured as the external interrupt.
2: This buffer is a Schmitt Trigger input when used in Serial Programming mode.
3: This buffer is a Schmitt Trigger input when configured in RC Oscillator mode and a CMOS input otherwise.

© 2001-2013 Microchip Technology Inc.

TABLE 1-2: PIC16F873A/876A PINOUT DESCRIPTION (CONTINUED)

Pin Name	PDIP, SOIC, SSOP Pin#	QFN Pin#	I/O/P Type	Buffer Type	Description
					PORTB is a bidirectional I/O port. PORTB can be software programmed for internal weak pull-ups on all inputs.
RB0/INT	21	18		TTL/ST(1)	
RB0			I/O		Digital I/O.
INT			I		External interrupt.
RB1	22	19	I/O	TTL	Digital I/O.
RB2	23	20	I/O	TTL	Digital I/O.
RB3/PGM	24	21		TTL	
RB3			I/O		Digital I/O.
PGM			I		Low-voltage (single-supply) ICSP programming enable pin.
RB4	25	22	I/O	TTL	Digital I/O.
RB5	26	23	I/O	TTL	Digital I/O.
RB6/PGC	27	24		TTL/ST(2)	
RB6			I/O		Digital I/O.
PGC			I		In-circuit debugger and ICSP programming clock.
RB7/PGD	28	25		TTL/ST(2)	
RB7			I/O		Digital I/O.
PGD			I/O		In-circuit debugger and ICSP programming data.
					PORTC is a bidirectional I/O port.
RC0/T1OSO/T1CKI	11	8		ST	
RC0			I/O		Digital I/O.
T1OSO			O		Timer1 oscillator output.
T1CKI			I		Timer1 external clock input.
RC1/T1OSI/CCP2	12	9		ST	
RC1			I/O		Digital I/O.
T1OSI			I		Timer1 oscillator input.
CCP2			I/O		Capture2 input, Compare2 output, PWM2 output.
RC2/CCP1	13	10		ST	
RC2			I/O		Digital I/O.
CCP1			I/O		Capture1 input, Compare1 output, PWM1 output.
RC3/SCK/SCL	14	11		ST	
RC3			I/O		Digital I/O.
SCK			I/O		Synchronous serial clock input/output for SPI mode.
SCL			I/O		Synchronous serial clock input/output for I^2C mode.
RC4/SDI/SDA	15	12		ST	
RC4			I/O		Digital I/O.
SDI			I		SPI data in.
SDA			I/O		I^2C data I/O.
RC5/SDO	16	13		ST	
RC5			I/O		Digital I/O.
SDO			O		SPI data out.
RC6/TX/CK	17	14		ST	
RC6			I/O		Digital I/O.
TX			O		USART asynchronous transmit.
CK			I/O		USART1 synchronous clock.
RC7/RX/DT	18	15		ST	
RC7			I/O		Digital I/O.
RX			I		USART asynchronous receive.
DT			I/O		USART synchronous data.
VSS	8, 19	5, 6	P	—	Ground reference for logic and I/O pins.
VDD	20	17	P	—	Positive supply for logic and I/O pins.

Legend: I = input O = output I/O = input/output P = power
— = Not used TTL = TTL input ST = Schmitt Trigger input

Note 1: This buffer is a Schmitt Trigger input when configured as the external interrupt.
2: This buffer is a Schmitt Trigger input when used in Serial Programming mode.
3: This buffer is a Schmitt Trigger input when configured in RC Oscillator mode and a CMOS input otherwise.

TABLE 1-3: PIC16F874A/877A PINOUT DESCRIPTION

Pin Name	PDIP Pin#	PLCC Pin#	TQFP Pin#	QFN Pin#	I/O/P Type	Buffer Type	Description
OSC1/CLKI	13	14	30	32		ST/CMOS(4)	Oscillator crystal or external clock input.
OSC1					I		Oscillator crystal input or external clock source input. ST buffer when configured in RC mode; otherwise CMOS.
CLKI					I		External clock source input. Always associated with pin function OSC1 (see OSC1/CLKI, OSC2/CLKO pins).
OSC2/CLKO	14	15	31	33		—	Oscillator crystal or clock output.
OSC2					O		Oscillator crystal output. Connects to crystal or resonator in Crystal Oscillator mode.
CLKO					O		In RC mode, OSC2 pin outputs CLKO, which has 1/4 the frequency of OSC1 and denotes the instruction cycle rate.
$\overline{MCLR}$/VPP	1	2	18	18		ST	Master Clear (input) or programming voltage (output).
$\overline{MCLR}$					I		Master Clear (Reset) input. This pin is an active low Reset to the device.
VPP					P		Programming voltage input.
							PORTA is a bidirectional I/O port.
RA0/AN0	2	3	19	19		TTL	
RA0					I/O		Digital I/O.
AN0					I		Analog input 0.
RA1/AN1	3	4	20	20		TTL	
RA1					I/O		Digital I/O.
AN1					I		Analog input 1.
RA2/AN2/VREF-/CVREF	4	5	21	21		TTL	
RA2					I/O		Digital I/O.
AN2					I		Analog input 2.
VREF-					I		A/D reference voltage (Low) input.
CVREF					O		Comparator VREF output.
RA3/AN3/VREF+	5	6	22	22		TTL	
RA3					I/O		Digital I/O.
AN3					I		Analog input 3.
VREF+					I		A/D reference voltage (High) input.
RA4/T0CKI/C1OUT	6	7	23	23		ST	
RA4					I/O		Digital I/O – Open-drain when configured as output.
T0CKI					I		Timer0 external clock input.
C1OUT					O		Comparator 1 output.
RA5/AN4/$\overline{SS}$/C2OUT	7	8	24	24		TTL	
RA5					I/O		Digital I/O.
AN4					I		Analog input 4.
$\overline{SS}$					I		SPI slave select input.
C2OUT					O		Comparator 2 output.

Legend: I = input O = output I/O = input/output P = power
— = Not used TTL = TTL input ST = Schmitt Trigger input

Note 1: This buffer is a Schmitt Trigger input when configured as the external interrupt.
2: This buffer is a Schmitt Trigger input when used in Serial Programming mode.
3: This buffer is a Schmitt Trigger input when configured in RC Oscillator mode and a CMOS input otherwise.

© 2001-2013 Microchip Technology Inc.

TABLE 1-3: PIC16F874A/877A PINOUT DESCRIPTION (CONTINUED)

Pin Name	PDIP Pin#	PLCC Pin#	TQFP Pin#	QFN Pin#	I/O/P Type	Buffer Type	Description
							PORTB is a bidirectional I/O port. PORTB can be software programmed for internal weak pull-up on all inputs.
RB0/INT	33	36	8	9		TTL/ST(1)	
RB0					I/O		Digital I/O.
INT					I		External interrupt.
RB1	34	37	9	10	I/O	TTL	Digital I/O.
RB2	35	38	10	11	I/O	TTL	Digital I/O.
RB3/PGM	36	39	11	12		TTL	
RB3					I/O		Digital I/O.
PGM					I		Low-voltage ICSP programming enable pin.
RB4	37	41	14	14	I/O	TTL	Digital I/O.
RB5	38	42	15	15	I/O	TTL	Digital I/O.
RB6/PGC	39	43	16	16		TTL/ST(2)	
RB6					I/O		Digital I/O.
PGC					I		In-circuit debugger and ICSP programming clock.
RB7/PGD	40	44	17	17		TTL/ST(2)	
RB7					I/O		Digital I/O.
PGD					I/O		In-circuit debugger and ICSP programming data.

Legend: I = input O = output I/O = input/output P = power
— = Not used TTL = TTL input ST = Schmitt Trigger input

Note 1: This buffer is a Schmitt Trigger input when configured as the external interrupt.
2: This buffer is a Schmitt Trigger input when used in Serial Programming mode.
3: This buffer is a Schmitt Trigger input when configured in RC Oscillator mode and a CMOS input otherwise.

TABLE 1-3: PIC16F874A/877A PINOUT DESCRIPTION (CONTINUED)

Pin Name	PDIP Pin#	PLCC Pin#	TQFP Pin#	QFN Pin#	I/O/P Type	Buffer Type	Description
							PORTC is a bidirectional I/O port.
RC0/T1OSO/T1CKI	15	16	32	34		ST	
RC0					I/O		Digital I/O.
T1OSO					O		Timer1 oscillator output.
T1CKI					I		Timer1 external clock input.
RC1/T1OSI/CCP2	16	18	35	35		ST	
RC1					I/O		Digital I/O.
T1OSI					I		Timer1 oscillator input.
CCP2					I/O		Capture2 input, Compare2 output, PWM2 output.
RC2/CCP1	17	19	36	36		ST	
RC2					I/O		Digital I/O.
CCP1					I/O		Capture1 input, Compare1 output, PWM1 output.
RC3/SCK/SCL	18	20	37	37		ST	
RC3					I/O		Digital I/O.
SCK					I/O		Synchronous serial clock input/output for SPI mode.
SCL					I/O		Synchronous serial clock input/output for I^2C mode.
RC4/SDI/SDA	23	25	42	42		ST	
RC4					I/O		Digital I/O.
SDI					I		SPI data in.
SDA					I/O		I^2C data I/O.
RC5/SDO	24	26	43	43		ST	
RC5					I/O		Digital I/O.
SDO					O		SPI data out.
RC6/TX/CK	25	27	44	44		ST	
RC6					I/O		Digital I/O.
TX					O		USART asynchronous transmit.
CK					I/O		USART1 synchronous clock.
RC7/RX/DT	26	29	1	1		ST	
RC7					I/O		Digital I/O.
RX					I		USART asynchronous receive.
DT					I/O		USART synchronous data.

Legend: I = input O = output I/O = input/output P = power
— = Not used TTL = TTL input ST = Schmitt Trigger input

Note 1: This buffer is a Schmitt Trigger input when configured as the external interrupt.
2: This buffer is a Schmitt Trigger input when used in Serial Programming mode.
3: This buffer is a Schmitt Trigger input when configured in RC Oscillator mode and a CMOS input otherwise.

© 2001-2013 Microchip Technology Inc.

TABLE 1-3: PIC16F874A/877A PINOUT DESCRIPTION (CONTINUED)

Pin Name	PDIP Pin#	PLCC Pin#	TQFP Pin#	QFN Pin#	I/O/P Type	Buffer Type	Description
							PORTD is a bidirectional I/O port or Parallel Slave Port when interfacing to a microprocessor bus.
RD0/PSP0	19	21	38	38		ST/TTL(3)	
RD0					I/O		Digital I/O.
PSP0					I/O		Parallel Slave Port data.
RD1/PSP1	20	22	39	39		ST/TTL(3)	
RD1					I/O		Digital I/O.
PSP1					I/O		Parallel Slave Port data.
RD2/PSP2	21	23	40	40		ST/TTL(3)	
RD2					I/O		Digital I/O.
PSP2					I/O		Parallel Slave Port data.
RD3/PSP3	22	24	41	41		ST/TTL(3)	
RD3					I/O		Digital I/O.
PSP3					I/O		Parallel Slave Port data.
RD4/PSP4	27	30	2	2		ST/TTL(3)	
RD4					I/O		Digital I/O.
PSP4					I/O		Parallel Slave Port data.
RD5/PSP5	28	31	3	3		ST/TTL(3)	
RD5					I/O		Digital I/O.
PSP5					I/O		Parallel Slave Port data.
RD6/PSP6	29	32	4	4		ST/TTL(3)	
RD6					I/O		Digital I/O.
PSP6					I/O		Parallel Slave Port data.
RD7/PSP7	30	33	5	5		ST/TTL(3)	
RD7					I/O		Digital I/O.
PSP7					I/O		Parallel Slave Port data.
							PORTE is a bidirectional I/O port.
RE0/$\overline{RD}$/AN5	8	9	25	25		ST/TTL(3)	
RE0					I/O		Digital I/O.
$\overline{RD}$					I		Read control for Parallel Slave Port.
AN5					I		Analog input 5.
RE1/$\overline{WR}$/AN6	9	10	26	26		ST/TTL(3)	
RE1					I/O		Digital I/O.
$\overline{WR}$					I		Write control for Parallel Slave Port.
AN6					I		Analog input 6.
RE2/$\overline{CS}$/AN7	10	11	27	27		ST/TTL(3)	
RE2					I/O		Digital I/O.
$\overline{CS}$					I		Chip select control for Parallel Slave Port.
AN7					I		Analog input 7.
VSS	12, 31	13, 34	6, 29	6, 30, 31	P	—	Ground reference for logic and I/O pins.
VDD	11, 32	12, 35	7, 28	7, 8, 28, 29	P	—	Positive supply for logic and I/O pins.
NC	—	1, 17, 28, 40	12,13, 33, 34	13	—	—	These pins are not internally connected. These pins should be left unconnected.

Legend: I = input O = output I/O = input/output P = power
— = Not used TTL = TTL input ST = Schmitt Trigger input

Note 1: This buffer is a Schmitt Trigger input when configured as the external interrupt.
2: This buffer is a Schmitt Trigger input when used in Serial Programming mode.
3: This buffer is a Schmitt Trigger input when configured in RC Oscillator mode and a CMOS input otherwise.

NOTES:

© 2001-2013 Microchip Technology Inc.

2.0 MEMORY ORGANIZATION

There are three memory blocks in each of the PIC16F87XA devices. The program memory and data memory have separate buses so that concurrent access can occur and is detailed in this section. The EEPROM data memory block is detailed in **Section 3.0 "Data EEPROM and Flash Program Memory"**.

Additional information on device memory may be found in the PIC® Mid-Range MCU Family Reference Manual (DS33023).

2.1 Program Memory Organization

The PIC16F87XA devices have a 13-bit program counter capable of addressing an 8K word x 14 bit program memory space. The PIC16F876A/877A devices have 8K words x 14 bits of Flash program memory, while PIC16F873A/874A devices have 4K words x 14 bits. Accessing a location above the physically implemented address will cause a wraparound.

The Reset vector is at 0000h and the interrupt vector is at 0004h.

FIGURE 2-1: PIC16F876A/877A PROGRAM MEMORY MAP AND STACK

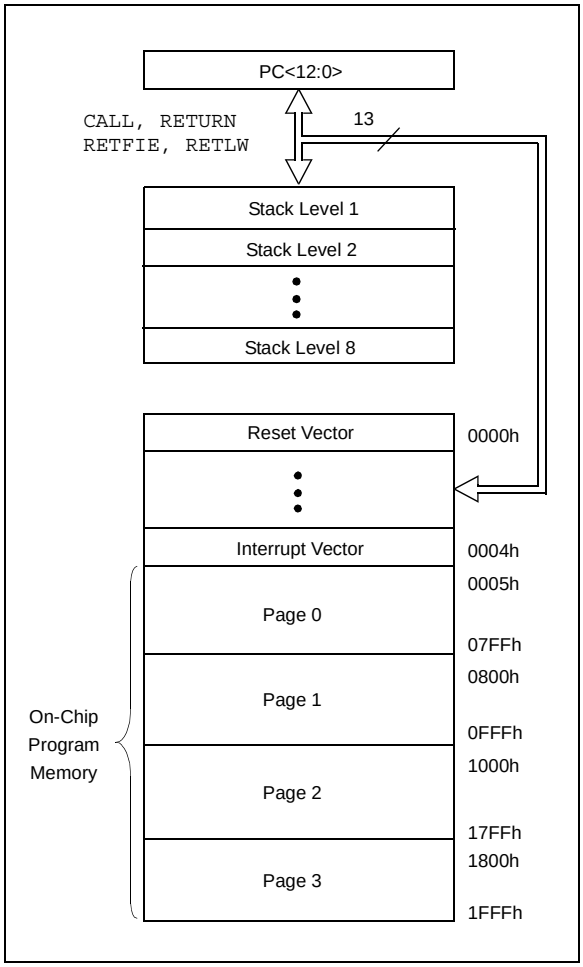

FIGURE 2-2: PIC16F873A/874A PROGRAM MEMORY MAP AND STACK

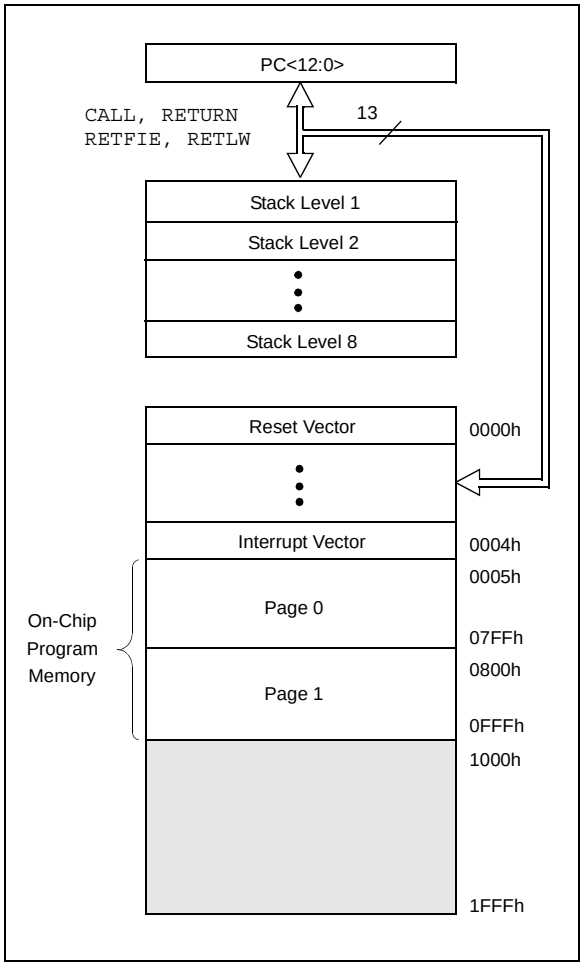

2.2 Data Memory Organization

The data memory is partitioned into multiple banks which contain the General Purpose Registers and the Special Function Registers. Bits RP1 (Status<6>) and RP0 (Status<5>) are the bank select bits.

RP1:RP0	Bank
00	0
01	1
10	2
11	3

Each bank extends up to 7Fh (128 bytes). The lower locations of each bank are reserved for the Special Function Registers. Above the Special Function Registers are General Purpose Registers, implemented as static RAM. All implemented banks contain Special Function Registers. Some frequently used Special Function Registers from one bank may be mirrored in another bank for code reduction and quicker access.

Note:	The EEPROM data memory description can be found in **Section 3.0 "Data EEPROM and Flash Program Memory"** of this data sheet.

2.2.1 GENERAL PURPOSE REGISTER FILE

The register file can be accessed either directly, or indirectly, through the File Select Register (FSR).

© 2001-2013 Microchip Technology Inc.

FIGURE 2-3: PIC16F876A/877A REGISTER FILE MAP

File Address	Bank 0	File Address	Bank 1	File Address	Bank 2	File Address	Bank 3
00h	Indirect addr.(*)	80h	Indirect addr.(*)	100h	Indirect addr.(*)	180h	Indirect addr.(*)
01h	TMR0	81h	OPTION_REG	101h	TMR0	181h	OPTION_REG
02h	PCL	82h	PCL	102h	PCL	182h	PCL
03h	STATUS	83h	STATUS	103h	STATUS	183h	STATUS
04h	FSR	84h	FSR	104h	FSR	184h	FSR
05h	PORTA	85h	TRISA	105h		185h	
06h	PORTB	86h	TRISB	106h	PORTB	186h	TRISB
07h	PORTC	87h	TRISC	107h		187h	
08h	PORTD(1)	88h	TRISD(1)	108h		188h	
09h	PORTE(1)	89h	TRISE(1)	109h		189h	
0Ah	PCLATH	8Ah	PCLATH	10Ah	PCLATH	18Ah	PCLATH
0Bh	INTCON	8Bh	INTCON	10Bh	INTCON	18Bh	INTCON
0Ch	PIR1	8Ch	PIE1	10Ch	EEDATA	18Ch	EECON1
0Dh	PIR2	8Dh	PIE2	10Dh	EEADR	18Dh	EECON2
0Eh	TMR1L	8Eh	PCON	10Eh	EEDATH	18Eh	Reserved(2)
0Fh	TMR1H	8Fh		10Fh	EEADRH	18Fh	Reserved(2)
10h	T1CON	90h		110h	General Purpose Register 16 Bytes	190h	General Purpose Register 16 Bytes
11h	TMR2	91h	SSPCON2	111h		191h	
12h	T2CON	92h	PR2	112h		192h	
13h	SSPBUF	93h	SSPADD	113h		193h	
14h	SSPCON	94h	SSPSTAT	114h		194h	
15h	CCPR1L	95h		115h		195h	
16h	CCPR1H	96h		116h		196h	
17h	CCP1CON	97h		117h		197h	
18h	RCSTA	98h	TXSTA	118h		198h	
19h	TXREG	99h	SPBRG	119h		199h	
1Ah	RCREG	9Ah		11Ah		19Ah	
1Bh	CCPR2L	9Bh		11Bh		19Bh	
1Ch	CCPR2H	9Ch	CMCON	11Ch		19Ch	
1Dh	CCP2CON	9Dh	CVRCON	11Dh		19Dh	
1Eh	ADRESH	9Eh	ADRESL	11Eh		19Eh	
1Fh	ADCON0	9Fh	ADCON1	11Fh		19Fh	
20h	General Purpose Register 96 Bytes	A0h	General Purpose Register 80 Bytes	120h	General Purpose Register 80 Bytes	1A0h	General Purpose Register 80 Bytes
		EFh		16Fh		1EFh	
		F0h	accesses 70h-7Fh	170h	accesses 70h-7Fh	1F0h	accesses 70h - 7Fh
7Fh		FFh		17Fh		1FFh	

Unimplemented data memory locations, read as '0'.
* Not a physical register.

Note 1: These registers are not implemented on the PIC16F876A.
2: These registers are reserved; maintain these registers clear.

FIGURE 2-4: PIC16F873A/874A REGISTER FILE MAP

Bank 0	File Address	Bank 1	File Address	Bank 2	File Address	Bank 3	File Address
Indirect addr.(*)	00h	Indirect addr.(*)	80h	Indirect addr.(*)	100h	Indirect addr.(*)	180h
TMR0	01h	OPTION_REG	81h	TMR0	101h	OPTION_REG	181h
PCL	02h	PCL	82h	PCL	102h	PCL	182h
STATUS	03h	STATUS	83h	STATUS	103h	STATUS	183h
FSR	04h	FSR	84h	FSR	104h	FSR	184h
PORTA	05h	TRISA	85h		105h		185h
PORTB	06h	TRISB	86h	PORTB	106h	TRISB	186h
PORTC	07h	TRISC	87h		107h		187h
PORTD(1)	08h	TRISD(1)	88h		108h		188h
PORTE(1)	09h	TRISE(1)	89h		109h		189h
PCLATH	0Ah	PCLATH	8Ah	PCLATH	10Ah	PCLATH	18Ah
INTCON	0Bh	INTCON	8Bh	INTCON	10Bh	INTCON	18Bh
PIR1	0Ch	PIE1	8Ch	EEDATA	10Ch	EECON1	18Ch
PIR2	0Dh	PIE2	8Dh	EEADR	10Dh	EECON2	18Dh
TMR1L	0Eh	PCON	8Eh	EEDATH	10Eh	Reserved(2)	18Eh
TMR1H	0Fh		8Fh	EEADRH	10Fh	Reserved(2)	18Fh
T1CON	10h		90h		110h		190h
TMR2	11h	SSPCON2	91h				
T2CON	12h	PR2	92h				
SSPBUF	13h	SSPADD	93h				
SSPCON	14h	SSPSTAT	94h				
CCPR1L	15h		95h				
CCPR1H	16h		96h				
CCP1CON	17h		97h				
RCSTA	18h	TXSTA	98h				
TXREG	19h	SPBRG	99h				
RCREG	1Ah		9Ah				
CCPR2L	1Bh		9Bh				
CCPR2H	1Ch	CMCON	9Ch				
CCP2CON	1Dh	CVRCON	9Dh				
ADRESH	1Eh	ADRESL	9Eh				
ADCON0	1Fh	ADCON1	9Fh		120h		1A0h
	20h		A0h				
General Purpose Register 96 Bytes	7Fh	General Purpose Register 96 Bytes	FFh	accesses 20h-7Fh	16Fh 170h 17Fh	accesses A0h - FFh	1EFh 1F0h 1FFh

Unimplemented data memory locations, read as '0'.
* Not a physical register.

Note 1: These registers are not implemented on the PIC16F873A.
2: These registers are reserved; maintain these registers clear.

© 2001-2013 Microchip Technology Inc.

2.2.2 SPECIAL FUNCTION REGISTERS

The Special Function Registers are registers used by the CPU and peripheral modules for controlling the desired operation of the device. These registers are implemented as static RAM. A list of these registers is given in Table 2-1.

The Special Function Registers can be classified into two sets: core (CPU) and peripheral. Those registers associated with the core functions are described in detail in this section. Those related to the operation of the peripheral features are described in detail in the peripheral features section.

TABLE 2-1: SPECIAL FUNCTION REGISTER SUMMARY

Address	Name	Bit 7	Bit 6	Bit 5	Bit 4	Bit 3	Bit 2	Bit 1	Bit 0	Value on: POR, BOR	Details on page:
Bank 0											
00h(3)	INDF	Addressing this location uses contents of FSR to address data memory (not a physical register)								0000 0000	31, 150
01h	TMR0	Timer0 Module Register								xxxx xxxx	55, 150
02h(3)	PCL	Program Counter (PC) Least Significant Byte								0000 0000	30, 150
03h(3)	STATUS	IRP	RP1	RP0	$\overline{TO}$	$\overline{PD}$	Z	DC	C	0001 1xxx	22, 150
04h(3)	FSR	Indirect Data Memory Address Pointer								xxxx xxxx	31, 150
05h	PORTA	—	—	PORTA Data Latch when written: PORTA pins when read						--0x 0000	43, 150
06h	PORTB	PORTB Data Latch when written: PORTB pins when read								xxxx xxxx	45, 150
07h	PORTC	PORTC Data Latch when written: PORTC pins when read								xxxx xxxx	47, 150
08h(4)	PORTD	PORTD Data Latch when written: PORTD pins when read								xxxx xxxx	48, 150
09h(4)	PORTE	—	—	—	—	—	RE2	RE1	RE0	---- -xxx	49, 150
0Ah(1,3)	PCLATH	—	—	—	Write Buffer for the upper 5 bits of the Program Counter					---0 0000	30, 150
0Bh(3)	INTCON	GIE	PEIE	TMR0IE	INTE	RBIE	TMR0IF	INTF	RBIF	0000 000x	24, 150
0Ch	PIR1	PSPIF(3)	ADIF	RCIF	TXIF	SSPIF	CCP1IF	TMR2IF	TMR1IF	0000 0000	26, 150
0Dh	PIR2	—	CMIF	—	EEIF	BCLIF	—	—	CCP2IF	-0-0 0--0	28, 150
0Eh	TMR1L	Holding Register for the Least Significant Byte of the 16-bit TMR1 Register								xxxx xxxx	60, 150
0Fh	TMR1H	Holding Register for the Most Significant Byte of the 16-bit TMR1 Register								xxxx xxxx	60, 150
10h	T1CON	—	—	T1CKPS1	T1CKPS0	T1OSCEN	$\overline{T1SYNC}$	TMR1CS	TMR1ON	--00 0000	57, 150
11h	TMR2	Timer2 Module Register								0000 0000	62, 150
12h	T2CON	—	TOUTPS3	TOUTPS2	TOUTPS1	TOUTPS0	TMR2ON	T2CKPS1	T2CKPS0	-000 0000	61, 150
13h	SSPBUF	Synchronous Serial Port Receive Buffer/Transmit Register								xxxx xxxx	79, 150
14h	SSPCON	WCOL	SSPOV	SSPEN	CKP	SSPM3	SSPM2	SSPM1	SSPM0	0000 0000	82, 82, 150
15h	CCPR1L	Capture/Compare/PWM Register 1 (LSB)								xxxx xxxx	63, 150
16h	CCPR1H	Capture/Compare/PWM Register 1 (MSB)								xxxx xxxx	63, 150
17h	CCP1CON	—	—	CCP1X	CCP1Y	CCP1M3	CCP1M2	CCP1M1	CCP1M0	--00 0000	64, 150
18h	RCSTA	SPEN	RX9	SREN	CREN	ADDEN	FERR	OERR	RX9D	0000 000x	112, 150
19h	TXREG	USART Transmit Data Register								0000 0000	118, 150
1Ah	RCREG	USART Receive Data Register								0000 0000	118, 150
1Bh	CCPR2L	Capture/Compare/PWM Register 2 (LSB)								xxxx xxxx	63, 150
1Ch	CCPR2H	Capture/Compare/PWM Register 2 (MSB)								xxxx xxxx	63, 150
1Dh	CCP2CON	—	—	CCP2X	CCP2Y	CCP2M3	CCP2M2	CCP2M1	CCP2M0	--00 0000	64, 150
1Eh	ADRESH	A/D Result Register High Byte								xxxx xxxx	133, 150
1Fh	ADCON0	ADCS1	ADCS0	CHS2	CHS1	CHS0	GO/$\overline{DONE}$	—	ADON	0000 00-0	127, 150

Legend: x = unknown, u = unchanged, q = value depends on condition, - = unimplemented, read as '0', r = reserved. Shaded locations are unimplemented, read as '0'.

Note 1: The upper byte of the program counter is not directly accessible. PCLATH is a holding register for the PC<12:8>, whose contents are transferred to the upper byte of the program counter.

2: Bits PSPIE and PSPIF are reserved on PIC16F873A/876A devices; always maintain these bits clear.

3: These registers can be addressed from any bank.

4: PORTD, PORTE, TRISD and TRISE are not implemented on PIC16F873A/876A devices, read as '0'.

5: Bit 4 of EEADRH implemented only on the PIC16F876A/877A devices.

TABLE 2-1: SPECIAL FUNCTION REGISTER SUMMARY (CONTINUED)

Address	Name	Bit 7	Bit 6	Bit 5	Bit 4	Bit 3	Bit 2	Bit 1	Bit 0	Value on: POR, BOR	Details on page:
Bank 1											
80h(3)	INDF	Addressing this location uses contents of FSR to address data memory (not a physical register)								0000 0000	31, 150
81h	OPTION_REG	$\overline{\text{RBPU}}$	INTEDG	T0CS	T0SE	PSA	PS2	PS1	PS0	1111 1111	23, 150
82h(3)	PCL	Program Counter (PC) Least Significant Byte								0000 0000	30, 150
83h(3)	STATUS	IRP	RP1	RP0	$\overline{\text{TO}}$	$\overline{\text{PD}}$	Z	DC	C	0001 1xxx	22, 150
84h(3)	FSR	Indirect Data Memory Address Pointer								xxxx xxxx	31, 150
85h	TRISA	—	—	PORTA Data Direction Register						--11 1111	43, 150
86h	TRISB	PORTB Data Direction Register								1111 1111	45, 150
87h	TRISC	PORTC Data Direction Register								1111 1111	47, 150
88h(4)	TRISD	PORTD Data Direction Register								1111 1111	48, 151
89h(4)	TRISE	IBF	OBF	IBOV	PSPMODE	—	PORTE Data Direction bits			0000 -111	50, 151
8Ah(1,3)	PCLATH	—	—	—	Write Buffer for the upper 5 bits of the Program Counter					---0 0000	30, 150
8Bh(3)	INTCON	GIE	PEIE	TMR0IE	INTE	RBIE	TMR0IF	INTF	RBIF	0000 000x	24, 150
8Ch	PIE1	PSPIE(2)	ADIE	RCIE	TXIE	SSPIE	CCP1IE	TMR2IE	TMR1IE	0000 0000	25, 151
8Dh	PIE2	—	CMIE	—	EEIE	BCLIE	—	—	CCP2IE	-0-0 0--0	27, 151
8Eh	PCON	—	—	—	—	—	—	$\overline{\text{POR}}$	$\overline{\text{BOR}}$	---- --qq	29, 151
8Fh	—	Unimplemented								—	—
90h	—	Unimplemented								—	—
91h	SSPCON2	GCEN	ACKSTAT	ACKDT	ACKEN	RCEN	PEN	RSEN	SEN	0000 0000	83, 151
92h	PR2	Timer2 Period Register								1111 1111	62, 151
93h	SSPADD	Synchronous Serial Port (I^2C mode) Address Register								0000 0000	79, 151
94h	SSPSTAT	SMP	CKE	D/$\overline{\text{A}}$	P	S	R/$\overline{\text{W}}$	UA	BF	0000 0000	79, 151
95h	—	Unimplemented								—	—
96h	—	Unimplemented								—	—
97h	—	Unimplemented								—	—
98h	TXSTA	CSRC	TX9	TXEN	SYNC	—	BRGH	TRMT	TX9D	0000 -010	111, 151
99h	SPBRG	Baud Rate Generator Register								0000 0000	113, 151
9Ah	—	Unimplemented								—	—
9Bh	—	Unimplemented								—	—
9Ch	CMCON	C2OUT	C1OUT	C2INV	C1INV	CIS	CM2	CM1	CM0	0000 0111	135, 151
9Dh	CVRCON	CVREN	CVROE	CVRR	—	CVR3	CVR2	CVR1	CVR0	000- 0000	141, 151
9Eh	ADRESL	A/D Result Register Low Byte								xxxx xxxx	133, 151
9Fh	ADCON1	ADFM	ADCS2	—	—	PCFG3	PCFG2	PCFG1	PCFG0	00-- 0000	128, 151

Legend: x = unknown, u = unchanged, q = value depends on condition, - = unimplemented, read as '0', r = reserved. Shaded locations are unimplemented, read as '0'.

Note 1: The upper byte of the program counter is not directly accessible. PCLATH is a holding register for the PC<12:8>, whose contents are transferred to the upper byte of the program counter.

2: Bits PSPIE and PSPIF are reserved on PIC16F873A/876A devices; always maintain these bits clear.

3: These registers can be addressed from any bank.

4: PORTD, PORTE, TRISD and TRISE are not implemented on PIC16F873A/876A devices, read as '0'.

5: Bit 4 of EEADRH implemented only on the PIC16F876A/877A devices.

© 2001-2013 Microchip Technology Inc.

TABLE 2-1: SPECIAL FUNCTION REGISTER SUMMARY (CONTINUED)

Address	Name	Bit 7	Bit 6	Bit 5	Bit 4	Bit 3	Bit 2	Bit 1	Bit 0	Value on: POR, BOR	Details on page:
Bank 2											
100h(3)	INDF	Addressing this location uses contents of FSR to address data memory (not a physical register)								0000 0000	31, 150
101h	TMR0	Timer0 Module Register								xxxx xxxx	55, 150
102h(3)	PCL	Program Counter's (PC) Least Significant Byte								0000 0000	30, 150
103h(3)	STATUS	IRP	RP1	RP0	$\overline{TO}$	$\overline{PD}$	Z	DC	C	0001 1xxx	22, 150
104h(3)	FSR	Indirect Data Memory Address Pointer								xxxx xxxx	31, 150
105h	—	Unimplemented								—	—
106h	PORTB	PORTB Data Latch when written: PORTB pins when read								xxxx xxxx	45, 150
107h	—	Unimplemented								—	—
108h	—	Unimplemented								—	—
109h	—	Unimplemented								—	—
10Ah(1,3)	PCLATH	—	—	—	Write Buffer for the upper 5 bits of the Program Counter					---0 0000	30, 150
10Bh(3)	INTCON	GIE	PEIE	TMR0IE	INTE	RBIE	TMR0IF	INTF	RBIF	0000 000x	24, 150
10Ch	EEDATA	EEPROM Data Register Low Byte								xxxx xxxx	39, 151
10Dh	EEADR	EEPROM Address Register Low Byte								xxxx xxxx	39, 151
10Eh	EEDATH	—	—	EEPROM Data Register High Byte						--xx xxxx	39, 151
10Fh	EEADRH	—	—	—	—(5)	EEPROM Address Register High Byte				---- xxxx	39, 151
Bank 3											
180h(3)	INDF	Addressing this location uses contents of FSR to address data memory (not a physical register)								0000 0000	31, 150
181h	OPTION_REG	$\overline{RBPU}$	INTEDG	T0CS	T0SE	PSA	PS2	PS1	PS0	1111 1111	23, 150
182h(3)	PCL	Program Counter (PC) Least Significant Byte								0000 0000	30, 150
183h(3)	STATUS	IRP	RP1	RP0	$\overline{TO}$	$\overline{PD}$	Z	DC	C	0001 1xxx	22, 150
184h(3)	FSR	Indirect Data Memory Address Pointer								xxxx xxxx	31, 150
185h	—	Unimplemented								—	—
186h	TRISB	PORTB Data Direction Register								1111 1111	45, 150
187h	—	Unimplemented								—	—
188h	—	Unimplemented								—	—
189h	—	Unimplemented								—	—
18Ah(1,3)	PCLATH	—	—	—	Write Buffer for the upper 5 bits of the Program Counter					---0 0000	30, 150
18Bh(3)	INTCON	GIE	PEIE	TMR0IE	INTE	RBIE	TMR0IF	INTF	RBIF	0000 000x	24, 150
18Ch	EECON1	EEPGD	—	—	—	WRERR	WREN	WR	RD	x--- x000	34, 151
18Dh	EECON2	EEPROM Control Register 2 (not a physical register)								---- ----	39, 151
18Eh	—	Reserved; maintain clear								0000 0000	—
18Fh	—	Reserved; maintain clear								0000 0000	—

Legend: x = unknown, u = unchanged, q = value depends on condition, - = unimplemented, read as '0', r = reserved. Shaded locations are unimplemented, read as '0'.

Note 1: The upper byte of the program counter is not directly accessible. PCLATH is a holding register for the PC<12:8>, whose contents are transferred to the upper byte of the program counter.

2: Bits PSPIE and PSPIF are reserved on PIC16F873A/876A devices; always maintain these bits clear.

3: These registers can be addressed from any bank.

4: PORTD, PORTE, TRISD and TRISE are not implemented on PIC16F873A/876A devices, read as '0'.

5: Bit 4 of EEADRH implemented only on the PIC16F876A/877A devices.

2.2.2.1 Status Register

The Status register contains the arithmetic status of the ALU, the Reset status and the bank select bits for data memory.

The Status register can be the destination for any instruction, as with any other register. If the Status register is the destination for an instruction that affects the Z, DC or C bits, then the write to these three bits is disabled. These bits are set or cleared according to the device logic. Furthermore, the $\overline{TO}$ and $\overline{PD}$ bits are not writable, therefore, the result of an instruction with the Status register as destination may be different than intended.

For example, `CLRF STATUS`, will clear the upper three bits and set the Z bit. This leaves the Status register as `000u u1uu` (where `u` = unchanged).

It is recommended, therefore, that only `BCF`, `BSF`, `SWAPF` and `MOVWF` instructions are used to alter the Status register because these instructions do not affect the Z, C or DC bits from the Status register. For other instructions not affecting any status bits, see **Section 15.0 "Instruction Set Summary"**.

> **Note:** The C and DC bits operate as a $\overline{borrow}$ and digit $\overline{borrow}$ bit, respectively, in subtraction. See the `SUBLW` and `SUBWF` instructions for examples.

REGISTER 2-1: STATUS REGISTER (ADDRESS 03h, 83h, 103h, 183h)

R/W-0	R/W-0	R/W-0	R-1	R-1	R/W-x	R/W-x	R/W-x
IRP	RP1	RP0	$\overline{TO}$	$\overline{PD}$	Z	DC	C
bit 7							bit 0

bit 7 **IRP:** Register Bank Select bit (used for indirect addressing)
`1` = Bank 2, 3 (100h-1FFh)
`0` = Bank 0, 1 (00h-FFh)

bit 6-5 **RP1:RP0**: Register Bank Select bits (used for direct addressing)
`11` = Bank 3 (180h-1FFh)
`10` = Bank 2 (100h-17Fh)
`01` = Bank 1 (80h-FFh)
`00` = Bank 0 (00h-7Fh)
Each bank is 128 bytes.

bit 4 **$\overline{TO}$**: Time-out bit
`1` = After power-up, `CLRWDT` instruction or `SLEEP` instruction
`0` = A WDT time-out occurred

bit 3 **$\overline{PD}$**: Power-down bit
`1` = After power-up or by the `CLRWDT` instruction
`0` = By execution of the `SLEEP` instruction

bit 2 **Z**: Zero bit
`1` = The result of an arithmetic or logic operation is zero
`0` = The result of an arithmetic or logic operation is not zero

bit 1 **DC**: Digit carry/$\overline{borrow}$ bit (`ADDWF`, `ADDLW`, `SUBLW`, `SUBWF` instructions)
(for $\overline{borrow}$, the polarity is reversed)
`1` = A carry-out from the 4th low order bit of the result occurred
`0` = No carry-out from the 4th low order bit of the result

bit 0 **C**: Carry/$\overline{borrow}$ bit (`ADDWF`, `ADDLW`, `SUBLW`, `SUBWF` instructions)
`1` = A carry-out from the Most Significant bit of the result occurred
`0` = No carry-out from the Most Significant bit of the result occurred

> **Note:** For $\overline{borrow}$, the polarity is reversed. A subtraction is executed by adding the two's complement of the second operand. For rotate (`RRF`, `RLF`) instructions, this bit is loaded with either the high, or low order bit of the source register.

Legend:			
R = Readable bit	W = Writable bit	U = Unimplemented bit, read as '0'	
- n = Value at POR	'1' = Bit is set	'0' = Bit is cleared	x = Bit is unknown

© 2001-2013 Microchip Technology Inc.

2.2.2.2 OPTION_REG Register

The OPTION_REG Register is a readable and writable register, which contains various control bits to configure the TMR0 prescaler/WDT postscaler (single assignable register known also as the prescaler), the external INT interrupt, TMR0 and the weak pull-ups on PORTB.

> **Note:** To achieve a 1:1 prescaler assignment for the TMR0 register, assign the prescaler to the Watchdog Timer.

REGISTER 2-2: OPTION_REG REGISTER (ADDRESS 81h, 181h)

R/W-1	R/W-1	R/W-1	R/W-1	R/W-1	R/W-1	R/W-1	R/W-1
$\overline{\text{RBPU}}$	INTEDG	T0CS	T0SE	PSA	PS2	PS1	PS0
bit 7							bit 0

bit 7 **$\overline{\text{RBPU}}$:** PORTB Pull-up Enable bit
1 = PORTB pull-ups are disabled
0 = PORTB pull-ups are enabled by individual port latch values

bit 6 **INTEDG**: Interrupt Edge Select bit
1 = Interrupt on rising edge of RB0/INT pin
0 = Interrupt on falling edge of RB0/INT pin

bit 5 **T0CS**: TMR0 Clock Source Select bit
1 = Transition on RA4/T0CKI pin
0 = Internal instruction cycle clock (CLKO)

bit 4 **T0SE**: TMR0 Source Edge Select bit
1 = Increment on high-to-low transition on RA4/T0CKI pin
0 = Increment on low-to-high transition on RA4/T0CKI pin

bit 3 **PSA**: Prescaler Assignment bit
1 = Prescaler is assigned to the WDT
0 = Prescaler is assigned to the Timer0 module

bit 2-0 **PS2:PS0**: Prescaler Rate Select bits

Bit Value	TMR0 Rate	WDT Rate
000	1 : 2	1 : 1
001	1 : 4	1 : 2
010	1 : 8	1 : 4
011	1 : 16	1 : 8
100	1 : 32	1 : 16
101	1 : 64	1 : 32
110	1 : 128	1 : 64
111	1 : 256	1 : 128

Legend:			
R = Readable bit	W = Writable bit	U = Unimplemented bit, read as ‘0’	
- n = Value at POR	‘1’ = Bit is set	‘0’ = Bit is cleared	x = Bit is unknown

> **Note:** When using Low-Voltage ICSP Programming (LVP) and the pull-ups on PORTB are enabled, bit 3 in the TRISB register must be cleared to disable the pull-up on RB3 and ensure the proper operation of the device

2.2.2.3 INTCON Register

The INTCON register is a readable and writable register, which contains various enable and flag bits for the TMR0 register overflow, RB port change and external RB0/INT pin interrupts.

> **Note:** Interrupt flag bits are set when an interrupt condition occurs regardless of the state of its corresponding enable bit or the global enable bit, GIE (INTCON<7>). User software should ensure the appropriate interrupt flag bits are clear prior to enabling an interrupt.

REGISTER 2-3: INTCON REGISTER (ADDRESS 0Bh, 8Bh, 10Bh, 18Bh)

R/W-0	R/W-0	R/W-0	R/W-0	R/W-0	R/W-0	R/W-0	R/W-x
GIE	PEIE	TMR0IE	INTE	RBIE	TMR0IF	INTF	RBIF
bit 7							bit 0

bit 7 **GIE:** Global Interrupt Enable bit
1 = Enables all unmasked interrupts
0 = Disables all interrupts

bit 6 **PEIE**: Peripheral Interrupt Enable bit
1 = Enables all unmasked peripheral interrupts
0 = Disables all peripheral interrupts

bit 5 **TMR0IE**: TMR0 Overflow Interrupt Enable bit
1 = Enables the TMR0 interrupt
0 = Disables the TMR0 interrupt

bit 4 **INTE**: RB0/INT External Interrupt Enable bit
1 = Enables the RB0/INT external interrupt
0 = Disables the RB0/INT external interrupt

bit 3 **RBIE**: RB Port Change Interrupt Enable bit
1 = Enables the RB port change interrupt
0 = Disables the RB port change interrupt

bit 2 **TMR0IF**: TMR0 Overflow Interrupt Flag bit
1 = TMR0 register has overflowed (must be cleared in software)
0 = TMR0 register did not overflow

bit 1 **INTF**: RB0/INT External Interrupt Flag bit
1 = The RB0/INT external interrupt occurred (must be cleared in software)
0 = The RB0/INT external interrupt did not occur

bit 0 **RBIF**: RB Port Change Interrupt Flag bit
1 = At least one of the RB7:RB4 pins changed state; a mismatch condition will continue to set the bit. Reading PORTB will end the mismatch condition and allow the bit to be cleared (must be cleared in software).
0 = None of the RB7:RB4 pins have changed state

Legend:			
R = Readable bit	W = Writable bit	U = Unimplemented bit, read as ‘0’	
- n = Value at POR	‘1’ = Bit is set	‘0’ = Bit is cleared	x = Bit is unknown

© 2001-2013 Microchip Technology Inc.

2.2.2.4 PIE1 Register

The PIE1 register contains the individual enable bits for the peripheral interrupts.

Note:	Bit PEIE (INTCON<6>) must be set to enable any peripheral interrupt.

REGISTER 2-4: PIE1 REGISTER (ADDRESS 8Ch)

R/W-0	R/W-0	R/W-0	R/W-0	R/W-0	R/W-0	R/W-0	R/W-0
PSPIE(1)	ADIE	RCIE	TXIE	SSPIE	CCP1IE	TMR2IE	TMR1IE
bit 7							bit 0

bit 7 **PSPIE:** Parallel Slave Port Read/Write Interrupt Enable bit(1)
1 = Enables the PSP read/write interrupt
0 = Disables the PSP read/write interrupt

Note 1: PSPIE is reserved on PIC16F873A/876A devices; always maintain this bit clear.

bit 6 **ADIE**: A/D Converter Interrupt Enable bit
1 = Enables the A/D converter interrupt
0 = Disables the A/D converter interrupt

bit 5 **RCIE**: USART Receive Interrupt Enable bit
1 = Enables the USART receive interrupt
0 = Disables the USART receive interrupt

bit 4 **TXIE**: USART Transmit Interrupt Enable bit
1 = Enables the USART transmit interrupt
0 = Disables the USART transmit interrupt

bit 3 **SSPIE**: Synchronous Serial Port Interrupt Enable bit
1 = Enables the SSP interrupt
0 = Disables the SSP interrupt

bit 2 **CCP1IE**: CCP1 Interrupt Enable bit
1 = Enables the CCP1 interrupt
0 = Disables the CCP1 interrupt

bit 1 **TMR2IE**: TMR2 to PR2 Match Interrupt Enable bit
1 = Enables the TMR2 to PR2 match interrupt
0 = Disables the TMR2 to PR2 match interrupt

bit 0 **TMR1IE**: TMR1 Overflow Interrupt Enable bit
1 = Enables the TMR1 overflow interrupt
0 = Disables the TMR1 overflow interrupt

Legend:			
R = Readable bit	W = Writable bit	U = Unimplemented bit, read as ‘0’	
- n = Value at POR	‘1’ = Bit is set	‘0’ = Bit is cleared	x = Bit is unknown

2.2.2.5 PIR1 Register

The PIR1 register contains the individual flag bits for the peripheral interrupts.

> **Note:** Interrupt flag bits are set when an interrupt condition occurs regardless of the state of its corresponding enable bit or the global enable bit, GIE (INTCON<7>). User software should ensure the appropriate interrupt bits are clear prior to enabling an interrupt.

REGISTER 2-5: PIR1 REGISTER (ADDRESS 0Ch)

R/W-0	R/W-0	R-0	R-0	R/W-0	R/W-0	R/W-0	R/W-0
PSPIF(1)	ADIF	RCIF	TXIF	SSPIF	CCP1IF	TMR2IF	TMR1IF
bit 7							bit 0

bit 7 **PSPIF:** Parallel Slave Port Read/Write Interrupt Flag bit(1)
1 = A read or a write operation has taken place (must be cleared in software)
0 = No read or write has occurred
Note 1: PSPIF is reserved on PIC16F873A/876A devices; always maintain this bit clear.

bit 6 **ADIF**: A/D Converter Interrupt Flag bit
1 = An A/D conversion completed
0 = The A/D conversion is not complete

bit 5 **RCIF**: USART Receive Interrupt Flag bit
1 = The USART receive buffer is full
0 = The USART receive buffer is empty

bit 4 **TXIF**: USART Transmit Interrupt Flag bit
1 = The USART transmit buffer is empty
0 = The USART transmit buffer is full

bit 3 **SSPIF**: Synchronous Serial Port (SSP) Interrupt Flag bit
1 = The SSP interrupt condition has occurred and must be cleared in software before returning from the Interrupt Service Routine. The conditions that will set this bit are:
- SPI – A transmission/reception has taken place.
- I^2C Slave – A transmission/reception has taken place.
- I^2C Master
  - A transmission/reception has taken place.
  - The initiated Start condition was completed by the SSP module.
  - The initiated Stop condition was completed by the SSP module.
  - The initiated Restart condition was completed by the SSP module.
  - The initiated Acknowledge condition was completed by the SSP module.
  - A Start condition occurred while the SSP module was Idle (multi-master system).
  - A Stop condition occurred while the SSP module was Idle (multi-master system).

0 = No SSP interrupt condition has occurred

bit 2 **CCP1IF**: CCP1 Interrupt Flag bit
Capture mode:
1 = A TMR1 register capture occurred (must be cleared in software)
0 = No TMR1 register capture occurred
Compare mode:
1 = A TMR1 register compare match occurred (must be cleared in software)
0 = No TMR1 register compare match occurred
PWM mode:
Unused in this mode.

bit 1 **TMR2IF**: TMR2 to PR2 Match Interrupt Flag bit
1 = TMR2 to PR2 match occurred (must be cleared in software)
0 = No TMR2 to PR2 match occurred

bit 0 **TMR1IF**: TMR1 Overflow Interrupt Flag bit
1 = TMR1 register overflowed (must be cleared in software)
0 = TMR1 register did not overflow

Legend:			
R = Readable bit	W = Writable bit	U = Unimplemented bit, read as ‘0’	
- n = Value at POR	‘1’ = Bit is set	‘0’ = Bit is cleared	x = Bit is unknown

© 2001-2013 Microchip Technology Inc.

2.2.2.6 PIE2 Register

The PIE2 register contains the individual enable bits for the CCP2 peripheral interrupt, the SSP bus collision interrupt, EEPROM write operation interrupt and the comparator interrupt.

Note:	Bit PEIE (INTCON<6>) must be set to enable any peripheral interrupt.

REGISTER 2-6: PIE2 REGISTER (ADDRESS 8Dh)

U-0	R/W-0	U-0	R/W-0	R/W-0	U-0	U-0	R/W-0
—	CMIE	—	EEIE	BCLIE	—	—	CCP2IE
bit 7							bit 0

bit 7 **Unimplemented:** Read as '0'

bit 6 **CMIE**: Comparator Interrupt Enable bit
1 = Enables the comparator interrupt
0 = Disable the comparator interrupt

bit 5 **Unimplemented:** Read as '0'

bit 4 **EEIE**: EEPROM Write Operation Interrupt Enable bit
1 = Enable EEPROM write interrupt
0 = Disable EEPROM write interrupt

bit 3 **BCLIE**: Bus Collision Interrupt Enable bit
1 = Enable bus collision interrupt
0 = Disable bus collision interrupt

bit 2-1 **Unimplemented:** Read as '0'

bit 0 **CCP2IE**: CCP2 Interrupt Enable bit
1 = Enables the CCP2 interrupt
0 = Disables the CCP2 interrupt

Legend:			
R = Readable bit	W = Writable bit	U = Unimplemented bit, read as '0'	
- n = Value at POR	'1' = Bit is set	'0' = Bit is cleared	x = Bit is unknown

2.2.2.7 PIR2 Register

The PIR2 register contains the flag bits for the CCP2 interrupt, the SSP bus collision interrupt, EEPROM write operation interrupt and the comparator interrupt.

Note:	Interrupt flag bits are set when an interrupt condition occurs regardless of the state of its corresponding enable bit or the global enable bit, GIE (INTCON<7>). User software should ensure the appropriate interrupt flag bits are clear prior to enabling an interrupt.

REGISTER 2-7: PIR2 REGISTER (ADDRESS 0Dh)

U-0	R/W-0	U-0	R/W-0	R/W-0	U-0	U-0	R/W-0
—	CMIF	—	EEIF	BCLIF	—	—	CCP2IF
bit 7							bit 0

bit 7 **Unimplemented:** Read as ‘0’

bit 6 **CMIF**: Comparator Interrupt Flag bit
1 = The comparator input has changed (must be cleared in software)
0 = The comparator input has not changed

bit 5 **Unimplemented:** Read as ‘0’

bit 4 **EEIF**: EEPROM Write Operation Interrupt Flag bit
1 = The write operation completed (must be cleared in software)
0 = The write operation is not complete or has not been started

bit 3 **BCLIF**: Bus Collision Interrupt Flag bit
1 = A bus collision has occurred in the SSP when configured for I^2C Master mode
0 = No bus collision has occurred

bit 2-1 **Unimplemented:** Read as ‘0’

bit 0 **CCP2IF**: CCP2 Interrupt Flag bit
Capture mode:
1 = A TMR1 register capture occurred (must be cleared in software)
0 = No TMR1 register capture occurred
Compare mode:
1 = A TMR1 register compare match occurred (must be cleared in software)
0 = No TMR1 register compare match occurred
PWM mode:
Unused.

Legend:			
R = Readable bit	W = Writable bit	U = Unimplemented bit, read as ‘0’	
- n = Value at POR	‘1’ = Bit is set	‘0’ = Bit is cleared	x = Bit is unknown

© 2001-2013 Microchip Technology Inc.

2.2.2.8 PCON Register

The Power Control (PCON) register contains flag bits to allow differentiation between a Power-on Reset (POR), a Brown-out Reset (BOR), a Watchdog Reset (WDT) and an external $\overline{\text{MCLR}}$ Reset.

Note:	$\overline{\text{BOR}}$ is unknown on Power-on Reset. It must be set by the user and checked on subsequent Resets to see if BOR is clear, indicating a brown-out has occurred. The BOR status bit is a “don’t care” and is not predictable if the brown-out circuit is disabled (by clearing the BODEN bit in the configuration word).

REGISTER 2-8: PCON REGISTER (ADDRESS 8Eh)

U-0	U-0	U-0	U-0	U-0	U-0	R/W-0	R/W-1
—	—	—	—	—	—	$\overline{\text{POR}}$	$\overline{\text{BOR}}$
bit 7							bit 0

bit 7-2 **Unimplemented:** Read as ‘0’

bit 1 $\overline{\textbf{POR}}$: Power-on Reset Status bit
1 = No Power-on Reset occurred
0 = A Power-on Reset occurred (must be set in software after a Power-on Reset occurs)

bit 0 $\overline{\textbf{BOR}}$: Brown-out Reset Status bit
1 = No Brown-out Reset occurred
0 = A Brown-out Reset occurred (must be set in software after a Brown-out Reset occurs)

Legend:			
R = Readable bit	W = Writable bit	U = Unimplemented bit, read as ‘0’	
- n = Value at POR	‘1’ = Bit is set	‘0’ = Bit is cleared	x = Bit is unknown

2.3 PCL and PCLATH

The Program Counter (PC) is 13 bits wide. The low byte comes from the PCL register which is a readable and writable register. The upper bits (PC<12:8>) are not readable, but are indirectly writable through the PCLATH register. On any Reset, the upper bits of the PC will be cleared. Figure 2-5 shows the two situations for the loading of the PC. The upper example in the figure shows how the PC is loaded on a write to PCL (PCLATH<4:0> → PCH). The lower example in the figure shows how the PC is loaded during a CALL or GOTO instruction (PCLATH<4:3> → PCH).

FIGURE 2-5: LOADING OF PC IN DIFFERENT SITUATIONS

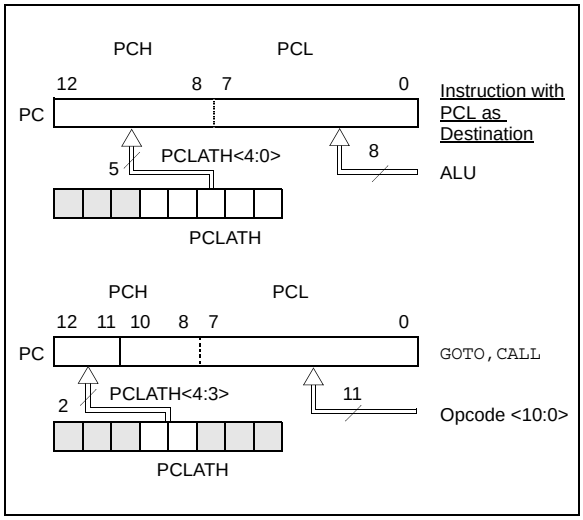

2.3.1 COMPUTED GOTO

A computed GOTO is accomplished by adding an offset to the program counter (ADDWF PCL). When doing a table read using a computed GOTO method, care should be exercised if the table location crosses a PCL memory boundary (each 256-byte block). Refer to the application note, *AN556, "Implementing a Table Read"* (DS00556).

2.3.2 STACK

The PIC16F87XA family has an 8-level deep x 13-bit wide hardware stack. The stack space is not part of either program or data space and the stack pointer is not readable or writable. The PC is PUSHed onto the stack when a CALL instruction is executed, or an interrupt causes a branch. The stack is POP'ed in the event of a RETURN, RETLW or a RETFIE instruction execution. PCLATH is not affected by a PUSH or POP operation.

The stack operates as a circular buffer. This means that after the stack has been PUSHed eight times, the ninth push overwrites the value that was stored from the first push. The tenth push overwrites the second push (and so on).

> **Note 1:** There are no status bits to indicate stack overflow or stack underflow conditions.
>
> **2:** There are no instructions/mnemonics called PUSH or POP. These are actions that occur from the execution of the CALL, RETURN, RETLW and RETFIE instructions or the vectoring to an interrupt address.

2.4 Program Memory Paging

All PIC16F87XA devices are capable of addressing a continuous 8K word block of program memory. The CALL and GOTO instructions provide only 11 bits of address to allow branching within any 2K program memory page. When doing a CALL or GOTO instruction, the upper 2 bits of the address are provided by PCLATH<4:3>. When doing a CALL or GOTO instruction, the user must ensure that the page select bits are programmed so that the desired program memory page is addressed. If a return from a CALL instruction (or interrupt) is executed, the entire 13-bit PC is popped off the stack. Therefore, manipulation of the PCLATH<4:3> bits is not required for the RETURN instructions (which POPs the address from the stack).

> **Note:** The contents of the PCLATH register are unchanged after a RETURN or RETFIE instruction is executed. The user must rewrite the contents of the PCLATH register for any subsequent subroutine calls or GOTO instructions.

Example 2-1 shows the calling of a subroutine in page 1 of the program memory. This example assumes that PCLATH is saved and restored by the Interrupt Service Routine (if interrupts are used).

EXAMPLE 2-1: CALL OF A SUBROUTINE IN PAGE 1 FROM PAGE 0

```
        ORG 0x500
        BCF PCLATH,4
        BSF PCLATH,3   ;Select page 1
                       ;(800h-FFFh)
        CALL SUB1_P1   ;Call subroutine in
        :              ;page 1 (800h-FFFh)
        :
        ORG 0x900      ;page 1 (800h-FFFh)
SUB1_P1
        :              ;called subroutine
                       ;page 1 (800h-FFFh)
        :
        RETURN         ;return to
                       ;Call subroutine
                       ;in page 0
                       ;(000h-7FFh)
```


© 2001-2013 Microchip Technology Inc.

2.5 Indirect Addressing, INDF and FSR Registers

The INDF register is not a physical register. Addressing the INDF register will cause indirect addressing.

Indirect addressing is possible by using the INDF register. Any instruction using the INDF register actually accesses the register pointed to by the File Select Register, FSR. Reading the INDF register itself, indirectly (FSR = 0) will read 00h. Writing to the INDF register indirectly results in a no operation (although status bits may be affected). An effective 9-bit address is obtained by concatenating the 8-bit FSR register and the IRP bit (Status<7>) as shown in Figure 2-6.

A simple program to clear RAM locations 20h-2Fh using indirect addressing is shown in Example 2-2.

EXAMPLE 2-2: INDIRECT ADDRESSING

```
        MOVLW  0x20    ;initialize pointer
        MOVWF  FSR     ;to RAM
NEXT    CLRF   INDF    ;clear INDF register
        INCF   FSR,F   ;inc pointer
        BTFSS  FSR,4   ;all done?
        GOTO   NEXT    ;no clear next
CONTINUE
        :              ;yes continue
```

FIGURE 2-6: DIRECT/INDIRECT ADDRESSING

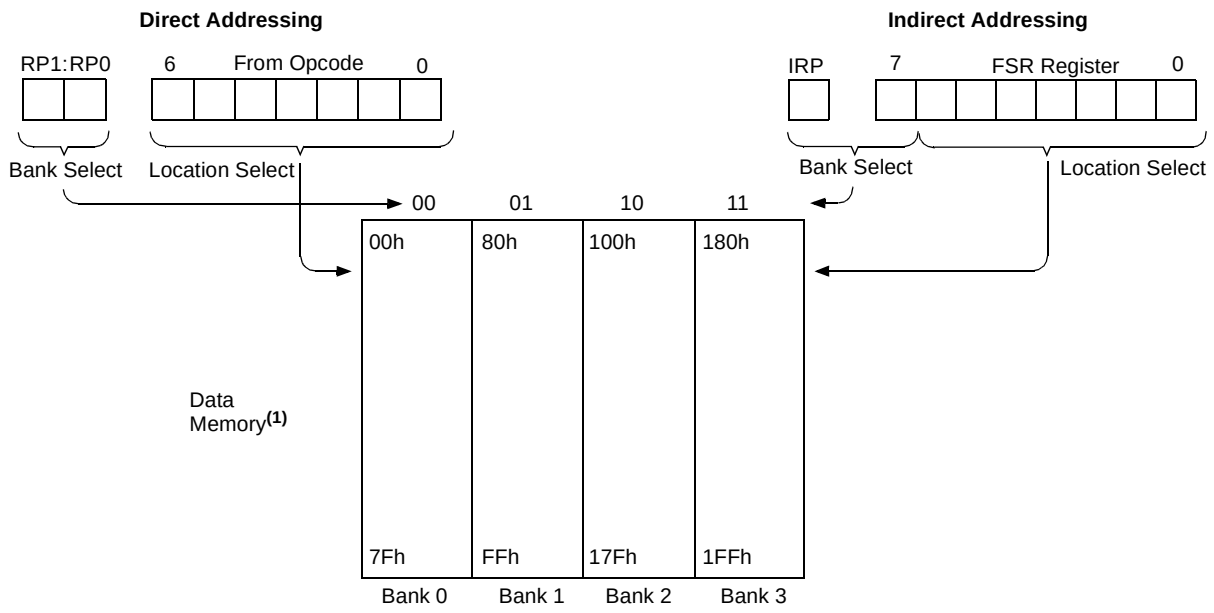

Note 1: For register file map detail, see Figure 2-3.

NOTES:

© 2001-2013 Microchip Technology Inc.

3.0 DATA EEPROM AND FLASH PROGRAM MEMORY

The data EEPROM and Flash program memory is readable and writable during normal operation (over the full VDD range). This memory is not directly mapped in the register file space. Instead, it is indirectly addressed through the Special Function Registers. There are six SFRs used to read and write this memory:

- EECON1
- EECON2
- EEDATA
- EEDATH
- EEADR
- EEADRH

When interfacing to the data memory block, EEDATA holds the 8-bit data for read/write and EEADR holds the address of the EEPROM location being accessed. These devices have 128 or 256 bytes of data EEPROM (depending on the device), with an address range from 00h to FFh. On devices with 128 bytes, addresses from 80h to FFh are unimplemented and will wraparound to the beginning of data EEPROM memory. When writing to unimplemented locations, the on-chip charge pump will be turned off.

When interfacing the program memory block, the EEDATA and EEDATH registers form a two-byte word that holds the 14-bit data for read/write and the EEADR and EEADRH registers form a two-byte word that holds the 13-bit address of the program memory location being accessed. These devices have 4 or 8K words of program Flash, with an address range from 0000h to 0FFFh for the PIC16F873A/874A and 0000h to 1FFFh for the PIC16F876A/877A. Addresses above the range of the respective device will wraparound to the beginning of program memory.

The EEPROM data memory allows single-byte read and write. The Flash program memory allows single-word reads and four-word block writes. Program memory write operations automatically perform an erase-before-write on blocks of four words. A byte write in data EEPROM memory automatically erases the location and writes the new data (erase-before-write).

The write time is controlled by an on-chip timer. The write/erase voltages are generated by an on-chip charge pump, rated to operate over the voltage range of the device for byte or word operations.

When the device is code-protected, the CPU may continue to read and write the data EEPROM memory. Depending on the settings of the write-protect bits, the device may or may not be able to write certain blocks of the program memory; however, reads of the program memory are allowed. When code-protected, the device programmer can no longer access data or program memory; this does NOT inhibit internal reads or writes.

3.1 EEADR and EEADRH

The EEADRH:EEADR register pair can address up to a maximum of 256 bytes of data EEPROM or up to a maximum of 8K words of program EEPROM. When selecting a data address value, only the LSByte of the address is written to the EEADR register. When selecting a program address value, the MSByte of the address is written to the EEADRH register and the LSByte is written to the EEADR register.

If the device contains less memory than the full address reach of the address register pair, the Most Significant bits of the registers are not implemented. For example, if the device has 128 bytes of data EEPROM, the Most Significant bit of EEADR is not implemented on access to data EEPROM.

3.2 EECON1 and EECON2 Registers

EECON1 is the control register for memory accesses.

Control bit, EEPGD, determines if the access will be a program or data memory access. When clear, as it is when reset, any subsequent operations will operate on the data memory. When set, any subsequent operations will operate on the program memory.

Control bits, RD and WR, initiate read and write or erase, respectively. These bits cannot be cleared, only set, in software. They are cleared in hardware at completion of the read or write operation. The inability to clear the WR bit in software prevents the accidental, premature termination of a write operation.

The WREN bit, when set, will allow a write or erase operation. On power-up, the WREN bit is clear. The WRERR bit is set when a write (or erase) operation is interrupted by a $\overline{\text{MCLR}}$ or a WDT Time-out Reset during normal operation. In these situations, following Reset, the user can check the WRERR bit and rewrite the location. The data and address will be unchanged in the EEDATA and EEADR registers.

Interrupt flag bit, EEIF in the PIR2 register, is set when the write is complete. It must be cleared in software.

EECON2 is not a physical register. Reading EECON2 will read all '0's. The EECON2 register is used exclusively in the EEPROM write sequence.

Note:	The self-programming mechanism for Flash program memory has been changed. On previous PIC16F87X devices, Flash programming was done in single-word erase/write cycles. The newer PIC18F87XA devices use a four-word erase/write cycle. See **Section 3.6 "Writing to Flash Program Memory"** for more information.

REGISTER 3-1: EECON1 REGISTER (ADDRESS 18Ch)

R/W-x	U-0	U-0	U-0	R/W-x	R/W-0	R/S-0	R/S-0
EEPGD	—	—	—	WRERR	WREN	WR	RD
bit 7							bit 0

bit 7 **EEPGD**: Program/Data EEPROM Select bit
1 = Accesses program memory
0 = Accesses data memory
Reads '0' after a POR; this bit cannot be changed while a write operation is in progress.

bit 6-4 **Unimplemented:** Read as '0'

bit 3 **WRERR:** EEPROM Error Flag bit
1 = A write operation is prematurely terminated (any $\overline{\text{MCLR}}$ or any WDT Reset during normal operation)
0 = The write operation completed

bit 2 **WREN:** EEPROM Write Enable bit
1 = Allows write cycles
0 = Inhibits write to the EEPROM

bit 1 **WR:** Write Control bit
1 = Initiates a write cycle. The bit is cleared by hardware once write is complete. The WR bit can only be set (not cleared) in software.
0 = Write cycle to the EEPROM is complete

bit 0 **RD:** Read Control bit
1 = Initiates an EEPROM read; RD is cleared in hardware. The RD bit can only be set (not cleared) in software.
0 = Does not initiate an EEPROM read

Legend:			
R = Readable bit	W = Writable bit	U = Unimplemented bit, read as '0'	
- n = Value at POR	'1' = Bit is set	'0' = Bit is cleared	x = Bit is unknown

© 2001-2013 Microchip Technology Inc.

3.3 Reading Data EEPROM Memory

To read a data memory location, the user must write the address to the EEADR register, clear the EEPGD control bit (EECON1<7>) and then set control bit RD (EECON1<0>). The data is available in the very next cycle in the EEDATA register; therefore, it can be read in the next instruction (see Example 3-1). EEDATA will hold this value until another read or until it is written to by the user (during a write operation).

The steps to reading the EEPROM data memory are:

1. Write the address to EEADR. Make sure that the address is not larger than the memory size of the device.
2. Clear the EEPGD bit to point to EEPROM data memory.
3. Set the RD bit to start the read operation.
4. Read the data from the EEDATA register.

EXAMPLE 3-1: DATA EEPROM READ

```
BSF     STATUS,RP1      ;
BCF     STATUS,RP0      ; Bank 2
MOVF    DATA_EE_ADDR,W  ; Data Memory
MOVWF   EEADR           ; Address to read
BSF     STATUS,RP0      ; Bank 3
BCF     EECON1,EEPGD    ; Point to Data
                        ; memory
BSF     EECON1,RD       ; EE Read
BCF     STATUS,RP0      ; Bank 2
MOVF    EEDATA,W        ; W = EEDATA
```

3.4 Writing to Data EEPROM Memory

To write an EEPROM data location, the user must first write the address to the EEADR register and the data to the EEDATA register. Then the user must follow a specific write sequence to initiate the write for each byte.

The write will not initiate if the write sequence is not exactly followed (write 55h to EECON2, write AAh to EECON2, then set WR bit) for each byte. We strongly recommend that interrupts be disabled during this code segment (see Example 3-2).

Additionally, the WREN bit in EECON1 must be set to enable write. This mechanism prevents accidental writes to data EEPROM due to errant (unexpected) code execution (i.e., lost programs). The user should keep the WREN bit clear at all times, except when updating EEPROM. The WREN bit is not cleared by hardware

After a write sequence has been initiated, clearing the WREN bit will not affect this write cycle. The WR bit will be inhibited from being set unless the WREN bit is set. At the completion of the write cycle, the WR bit is cleared in hardware and the EE Write Complete Interrupt Flag bit (EEIF) is set. The user can either enable this interrupt or poll this bit. EEIF must be cleared by software.

The steps to write to EEPROM data memory are:

1. If step 10 is not implemented, check the WR bit to see if a write is in progress.
2. Write the address to EEADR. Make sure that the address is not larger than the memory size of the device.
3. Write the 8-bit data value to be programmed in the EEDATA register.
4. Clear the EEPGD bit to point to EEPROM data memory.
5. Set the WREN bit to enable program operations.
6. Disable interrupts (if enabled).
7. Execute the special five instruction sequence:
   - Write 55h to EECON2 in two steps (first to W, then to EECON2)
   - Write AAh to EECON2 in two steps (first to W, then to EECON2)
   - Set the WR bit
8. Enable interrupts (if using interrupts).
9. Clear the WREN bit to disable program operations.
10. At the completion of the write cycle, the WR bit is cleared and the EEIF interrupt flag bit is set. (EEIF must be cleared by firmware.) If step 1 is not implemented, then firmware should check for EEIF to be set, or WR to clear, to indicate the end of the program cycle.

EXAMPLE 3-2: DATA EEPROM WRITE

```
        BSF     STATUS,RP1      ;
        BSF     STATUS,RP0
        BTFSC   EECON1,WR       ;Wait for write
        GOTO    $-1             ;to complete
        BCF     STATUS,  RP0    ;Bank 2
        MOVF    DATA_EE_ADDR,W  ;Data Memory
        MOVWF   EEADR           ;Address to write
        MOVF    DATA_EE_DATA,W  ;Data Memory Value
        MOVWF   EEDATA          ;to write
        BSF     STATUS,RP0      ;Bank 3
        BCF     EECON1,EEPGD    ;Point to DATA
                                ;memory
        BSF     EECON1,WREN     ;Enable writes

        BCF     INTCON,GIE      ;Disable INTs.
        MOVLW   55h             ;
Required MOVWF  EECON2          ;Write 55h
Sequence MOVLW  AAh             ;
        MOVWF   EECON2          ;Write AAh
        BSF     EECON1,WR       ;Set WR bit to
                                ;begin write
        BSF     INTCON,GIE      ;Enable INTs.
        BCF     EECON1,WREN     ;Disable writes
```

3.5 Reading Flash Program Memory

To read a program memory location, the user must write two bytes of the address to the EEADR and EEADRH registers, set the EEPGD control bit (EECON1<7>) and then set control bit RD (EECON1<0>). Once the read control bit is set, the program memory Flash controller will use the next two instruction cycles to read the data. This causes these two instructions immediately following the "`BSF EECON1,RD`" instruction to be ignored. The data is available in the very next cycle in the EEDATA and EEDATH registers; therefore, it can be read as two bytes in the following instructions. EEDATA and EEDATH registers will hold this value until another read or until it is written to by the user (during a write operation).

EXAMPLE 3-3: FLASH PROGRAM READ

```
        BSF     STATUS, RP1       ;
        BCF     STATUS, RP0       ; Bank 2
        MOVLW   MS_PROG_EE_ADDR   ;
        MOVWF   EEADRH            ; MS Byte of Program Address to read
        MOVLW   LS_PROG_EE_ADDR   ;
        MOVWF   EEADR             ; LS Byte of Program Address to read
        BSF     STATUS, RP0       ; Bank 3
        BSF     EECON1, EEPGD     ; Point to PROGRAM memory
        BSF     EECON1, RD        ; EE Read
;
        NOP
        NOP                       ; Any instructions here are ignored as program
                                  ; memory is read in second cycle after BSF EECON1,RD
;
        BCF     STATUS, RP0       ; Bank 2
        MOVF    EEDATA, W         ; W = LS Byte of Program EEDATA
        MOVWF   DATAL             ;
        MOVF    EEDATH, W         ; W = MS Byte of Program EEDATA
        MOVWF   DATAH             ;
```

Required Sequence

© 2001-2013 Microchip Technology Inc.

3.6 Writing to Flash Program Memory

Flash program memory may only be written to if the destination address is in a segment of memory that is not write-protected, as defined in bits WRT1:WRT0 of the device configuration word (Register 14-1). Flash program memory must be written in four-word blocks. A block consists of four words with sequential addresses, with a lower boundary defined by an address, where EEADR<1:0> = `00`. At the same time, all block writes to program memory are done as erase and write operations. The write operation is edge-aligned and cannot occur across boundaries.

To write program data, it must first be loaded into the buffer registers (see Figure 3-1). This is accomplished by first writing the destination address to EEADR and EEADRH and then writing the data to EEDATA and EEDATH. After the address and data have been set up, then the following sequence of events must be executed:

1. Set the EEPGD control bit (EECON1<7>).
2. Write 55h, then AAh, to EECON2 (Flash programming sequence).
3. Set the WR control bit (EECON1<1>).

All four buffer register locations **MUST** be written to with correct data. If only one, two or three words are being written to in the block of four words, then a read from the program memory location(s) not being written to must be performed. This takes the data from the program location(s) not being written and loads it into the EEDATA and EEDATH registers. Then the sequence of events to transfer data to the buffer registers must be executed.

To transfer data from the buffer registers to the program memory, the EEADR and EEADRH must point to the last location in the four-word block (EEADR<1:0> = `11`). Then the following sequence of events must be executed:

1. Set the EEPGD control bit (EECON1<7>).
2. Write 55h, then AAh, to EECON2 (Flash programming sequence).
3. Set control bit WR (EECON1<1>) to begin the write operation.

The user must follow the same specific sequence to initiate the write for each word in the program block, writing each program word in sequence (`00,01,10,11`). When the write is performed on the last word (EEADR<1:0> = `11`), the block of four words are automatically erased and the contents of the buffer registers are written into the program memory.

After the "`BSF EECON1,WR`" instruction, the processor requires two cycles to set up the erase/write operation. The user must place two `NOP` instructions after the WR bit is set. Since data is being written to buffer registers, the writing of the first three words of the block appears to occur immediately. The processor will halt internal operations for the typical 4 ms, only during the cycle in which the erase takes place (i.e., the last word of the four-word block). This is not Sleep mode as the clocks and peripherals will continue to run. After the write cycle, the processor will resume operation with the third instruction after the EECON1 write instruction. If the sequence is performed to any other location, the action is ignored.

FIGURE 3-1: BLOCK WRITES TO FLASH PROGRAM MEMORY

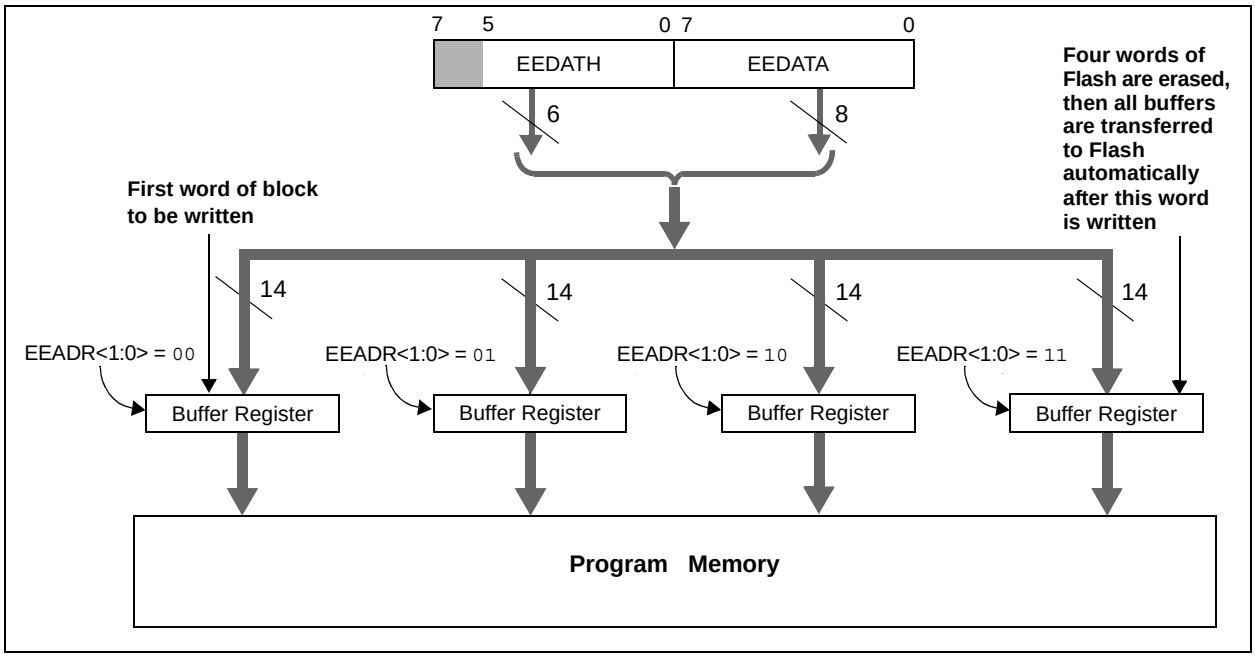

An example of the complete four-word write sequence is shown in Example 3-4. The initial address is loaded into the EEADRH:EEADR register pair; the four words of data are loaded using indirect addressing.

EXAMPLE 3-4: WRITING TO FLASH PROGRAM MEMORY

```
; This write routine assumes the following:
;
; 1. A valid starting address (the least significant bits = '00')is loaded in ADDRH:ADDRL
; 2. The 8 bytes of data are loaded, starting at the address in DATADDR
; 3. ADDRH, ADDRL and DATADDR are all located in shared data memory 0x70 - 0x7f
;
        BSF     STATUS,RP1          ;
        BCF     STATUS,RP0          ; Bank 2
        MOVF    ADDRH,W             ; Load initial address
        MOVWF   EEADRH              ;
        MOVF    ADDRL,W             ;
        MOVWF   EEADR               ;
        MOVF    DATAADDR,W          ; Load initial data address
        MOVWF   FSR                 ;
LOOP    MOVF    INDF,W              ; Load first data byte into lower
        MOVWF   EEDATA              ;
        INCF    FSR,F               ; Next byte
        MOVF    INDF,W              ; Load second data byte into upper
        MOVWF   EEDATH              ;
        INCF    FSR,F               ;
        BSF     STATUS,RP0          ; Bank 3
        BSF     EECON1,EEPGD        ; Point to program memory
        BSF     EECON1,WREN         ; Enable writes
        BCF     INTCON,GIE          ; Disable interrupts (if using)
        MOVLW   55h                 ; Start of required write sequence:
        MOVWF   EECON2              ; Write 55h
        MOVLW   AAh                 ;
        MOVWF   EECON2              ; Write AAh
        BSF     EECON1,WR           ; Set WR bit to begin write
        NOP                         ; Any instructions here are ignored as processor
                                    ; halts to begin write sequence
        NOP                         ; processor will stop here and wait for write complete
                                    ; after write processor continues with 3rd instruction
        BCF     EECON1,WREN         ; Disable writes
        BSF     INTCON,GIE          ; Enable interrupts (if using)
        BCF     STATUS,RP0          ; Bank 2
        INCF    EEADR,F             ; Increment address
        MOVF    EEADR,W             ; Check if lower two bits of address are '00'
        ANDLW   0x03                ; Indicates when four words have been programmed
        XORLW   0x03                ;
        BTFSC   STATUS,Z            ; Exit if more than four words,
        GOTO    LOOP                ; Continue if less than four words
```

Required Sequence

© 2001-2013 Microchip Technology Inc.

3.7 Protection Against Spurious Write

There are conditions when the device should not write to the data EEPROM or Flash program memory. To protect against spurious writes, various mechanisms have been built-in. On power-up, WREN is cleared. Also, the Power-up Timer (72 ms duration) prevents an EEPROM write.

The write initiate sequence and the WREN bit together help prevent an accidental write during brown-out, power glitch or software malfunction.

3.8 Operation During Code-Protect

When the data EEPROM is code-protected, the microcontroller can read and write to the EEPROM normally. However, all external access to the EEPROM is disabled. External write access to the program memory is also disabled.

When program memory is code-protected, the microcontroller can read and write to program memory normally, as well as execute instructions. Writes by the device may be selectively inhibited to regions of the memory depending on the setting of bits WR1:WR0 of the configuration word (see **Section 14.1 “Configuration Bits”** for additional information). External access to the memory is also disabled.

TABLE 3-1: REGISTERS/BITS ASSOCIATED WITH DATA EEPROM AND FLASH PROGRAM MEMORIES

Address	Name	Bit 7	Bit 6	Bit 5	Bit 4	Bit 3	Bit 2	Bit 1	Bit 0	Value on Power-on Reset	Value on all other Resets
10Ch	EEDATA	EEPROM/Flash Data Register Low Byte								xxxx xxxx	uuuu uuuu
10Dh	EEADR	EEPROM/Flash Address Register Low Byte								xxxx xxxx	uuuu uuuu
10Eh	EEDATH	—	—	EEPROM/Flash Data Register High Byte						xxxx xxxx	---0 q000
10Fh	EEADRH	—	—	—	EEPROM/Flash Address Register High Byte					xxxx xxxx	---- ----
18Ch	EECON1	EEPGD	—	—	—	WRERR	WREN	WR	RD	x--- x000	---0 q000
18Dh	EECON2	EEPROM Control Register 2 (not a physical register)								---- ----	---- ----
0Dh	PIR2	—	CMIF	—	EEIF	BCLIF	—	—	CCP2IF	-0-0 0--0	-0-0 0--0
8Dh	PIE2	—	CMIE	—	EEIE	BCLIE	—	—	CCP2IE	-0-0 0--0	-0-0 0--0

Legend: x = unknown, u = unchanged, - = unimplemented, read as ‘0’, q = value depends upon condition.
Shaded cells are not used by data EEPROM or Flash program memory.

NOTES:

© 2001-2013 Microchip Technology Inc.

4.0 I/O PORTS

Some pins for these I/O ports are multiplexed with an alternate function for the peripheral features on the device. In general, when a peripheral is enabled, that pin may not be used as a general purpose I/O pin.

Additional information on I/O ports may be found in the PIC® Mid-Range Reference Manual (DS33023).

4.1 PORTA and the TRISA Register

PORTA is a 6-bit wide, bidirectional port. The corresponding data direction register is TRISA. Setting a TRISA bit (= 1) will make the corresponding PORTA pin an input (i.e., put the corresponding output driver in a High-Impedance mode). Clearing a TRISA bit (= 0) will make the corresponding PORTA pin an output (i.e., put the contents of the output latch on the selected pin).

Reading the PORTA register reads the status of the pins, whereas writing to it will write to the port latch. All write operations are read-modify-write operations. Therefore, a write to a port implies that the port pins are read, the value is modified and then written to the port data latch.

Pin RA4 is multiplexed with the Timer0 module clock input to become the RA4/T0CKI pin. The RA4/T0CKI pin is a Schmitt Trigger input and an open-drain output. All other PORTA pins have TTL input levels and full CMOS output drivers.

Other PORTA pins are multiplexed with analog inputs and the analog VREF input for both the A/D converters and the comparators. The operation of each pin is selected by clearing/setting the appropriate control bits in the ADCON1 and/or CMCON registers.

Note:	On a Power-on Reset, these pins are configured as analog inputs and read as '0'. The comparators are in the off (digital) state.

The TRISA register controls the direction of the port pins even when they are being used as analog inputs. The user must ensure the bits in the TRISA register are maintained set when using them as analog inputs.

EXAMPLE 4-1: INITIALIZING PORTA

```
BCF     STATUS, RP0   ;
BCF     STATUS, RP1   ; Bank0
CLRF    PORTA         ; Initialize PORTA by
                      ; clearing output
                      ; data latches
BSF     STATUS, RP0   ; Select Bank 1
MOVLW   0x06          ; Configure all pins
MOVWF   ADCON1        ; as digital inputs
MOVLW   0xCF          ; Value used to
                      ; initialize data
                      ; direction
MOVWF   TRISA         ; Set RA<3:0> as inputs
                      ; RA<5:4> as outputs
                      ; TRISA<7:6>are always
                      ; read as '0'.
```

FIGURE 4-1: BLOCK DIAGRAM OF RA3:RA0 PINS

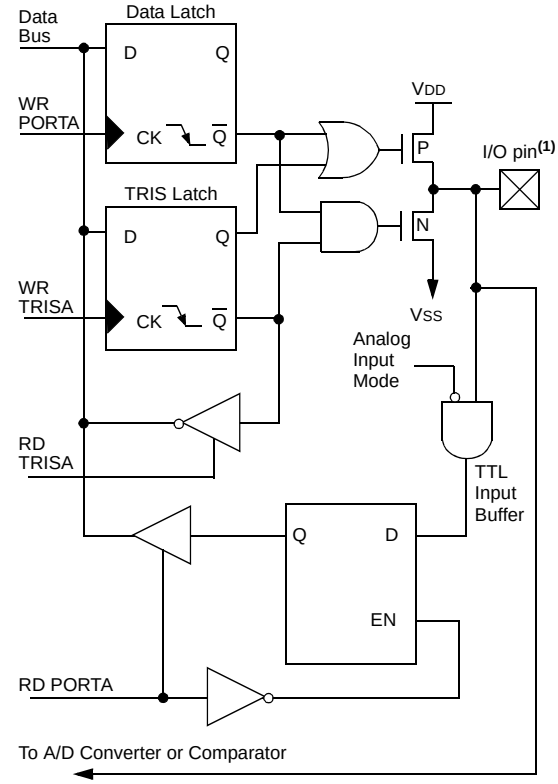

Note 1: I/O pins have protection diodes to VDD and VSS.

FIGURE 4-2: BLOCK DIAGRAM OF RA4/T0CKI PIN

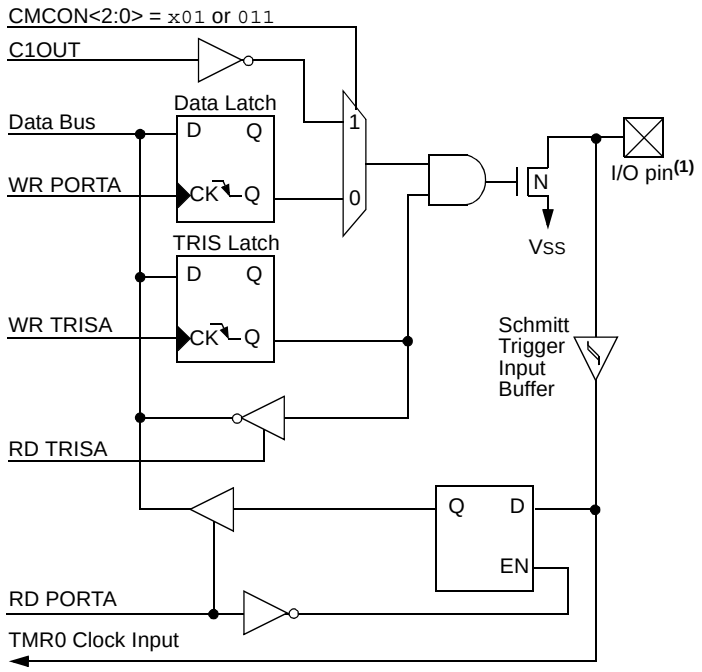

Note 1: I/O pin has protection diodes to Vss only.

FIGURE 4-3: BLOCK DIAGRAM OF RA5 PIN

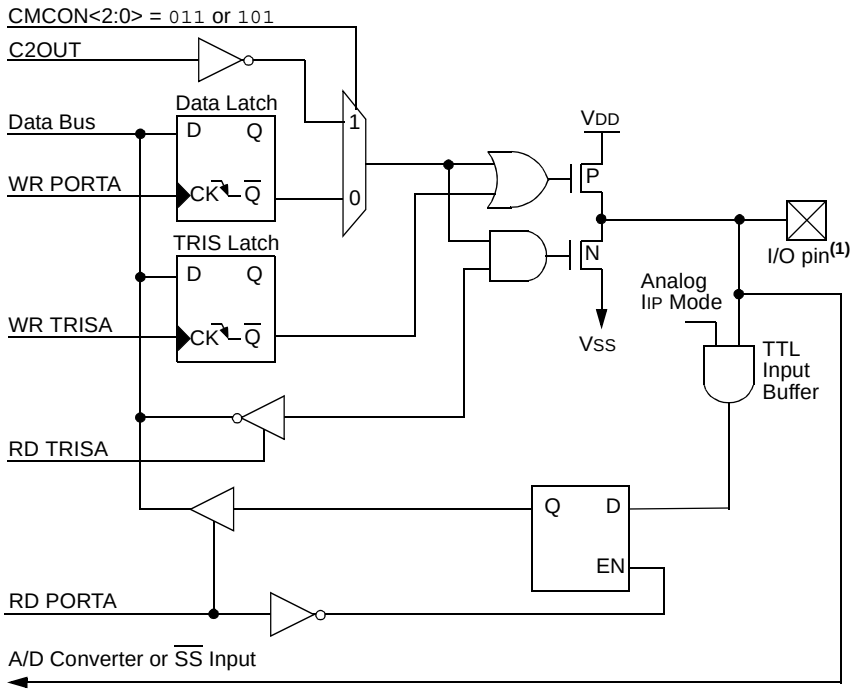

Note 1: I/O pin has protection diodes to VDD and Vss.

© 2001-2013 Microchip Technology Inc.

TABLE 4-1: PORTA FUNCTIONS

Name	Bit#	Buffer	Function
RA0/AN0	bit 0	TTL	Input/output or analog input.
RA1/AN1	bit 1	TTL	Input/output or analog input.
RA2/AN2/VREF-/CVREF	bit 2	TTL	Input/output or analog input or VREF- or CVREF.
RA3/AN3/VREF+	bit 3	TTL	Input/output or analog input or VREF+.
RA4/T0CKI/C1OUT	bit 4	ST	Input/output or external clock input for Timer0 or comparator output. Output is open-drain type.
RA5/AN4/$\overline{SS}$/C2OUT	bit 5	TTL	Input/output or analog input or slave select input for synchronous serial port or comparator output.

Legend: TTL = TTL input, ST = Schmitt Trigger input

TABLE 4-2: SUMMARY OF REGISTERS ASSOCIATED WITH PORTA

Address	Name	Bit 7	Bit 6	Bit 5	Bit 4	Bit 3	Bit 2	Bit 1	Bit 0	Value on: POR, BOR	Value on all other Resets
05h	PORTA	—	—	RA5	RA4	RA3	RA2	RA1	RA0	`--0x 0000`	`--0u 0000`
85h	TRISA	—	—	PORTA Data Direction Register						`--11 1111`	`--11 1111`
9Ch	CMCON	C2OUT	C1OUT	C2INV	C1INV	CIS	CM2	CM1	CM0	`0000 0111`	`0000 0111`
9Dh	CVRCON	CVREN	CVROE	CVRR	—	CVR3	CVR2	CVR1	CVR0	`000- 0000`	`000- 0000`
9Fh	ADCON1	ADFM	ADCS2	—	—	PCFG3	PCFG2	PCFG1	PCFG0	`00-- 0000`	`00-- 0000`

Legend: `x` = unknown, `u` = unchanged, `-` = unimplemented locations read as '`0`'. Shaded cells are not used by PORTA.

Note: When using the SSP module in SPI Slave mode and $\overline{SS}$ enabled, the A/D converter must be set to one of the following modes, where PCFG3:PCFG0 = `0100, 0101, 011x, 1101, 1110, 1111`.

4.2 PORTB and the TRISB Register

PORTB is an 8-bit wide, bidirectional port. The corresponding data direction register is TRISB. Setting a TRISB bit (= 1) will make the corresponding PORTB pin an input (i.e., put the corresponding output driver in a High-Impedance mode). Clearing a TRISB bit (= 0) will make the corresponding PORTB pin an output (i.e., put the contents of the output latch on the selected pin).

Three pins of PORTB are multiplexed with the In-Circuit Debugger and Low-Voltage Programming function: RB3/PGM, RB6/PGC and RB7/PGD. The alternate functions of these pins are described in **Section 14.0 "Special Features of the CPU"**.

Each of the PORTB pins has a weak internal pull-up. A single control bit can turn on all the pull-ups. This is performed by clearing bit $\overline{\text{RBPU}}$ (OPTION_REG<7>). The weak pull-up is automatically turned off when the port pin is configured as an output. The pull-ups are disabled on a Power-on Reset.

FIGURE 4-4: BLOCK DIAGRAM OF RB3:RB0 PINS

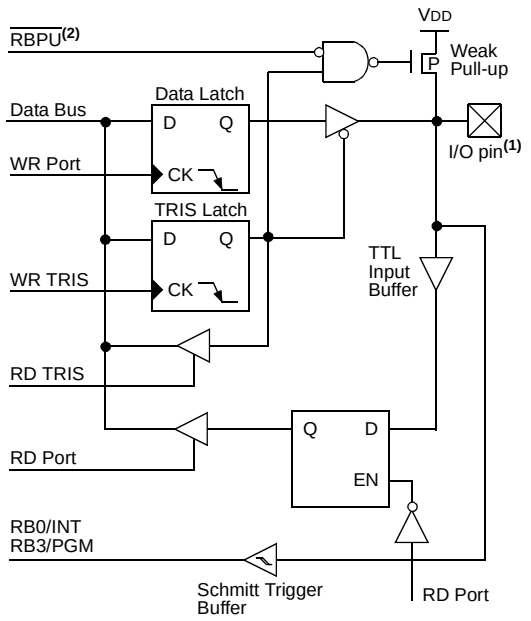

Note 1: I/O pins have diode protection to VDD and VSS.
2: To enable weak pull-ups, set the appropriate TRIS bit(s) and clear the $\overline{\text{RBPU}}$ bit (OPTION_REG<7>).

Four of the PORTB pins, RB7:RB4, have an interrupt-on-change feature. Only pins configured as inputs can cause this interrupt to occur (i.e., any RB7:RB4 pin configured as an output is excluded from the interrupt-on-change comparison). The input pins (of RB7:RB4) are compared with the old value latched on the last read of PORTB. The "mismatch" outputs of RB7:RB4 are OR'ed together to generate the RB port change interrupt with flag bit RBIF (INTCON<0>).

This interrupt can wake the device from Sleep. The user, in the Interrupt Service Routine, can clear the interrupt in the following manner:

a) Any read or write of PORTB. This will end the mismatch condition.
b) Clear flag bit RBIF.

A mismatch condition will continue to set flag bit RBIF. Reading PORTB will end the mismatch condition and allow flag bit RBIF to be cleared.

The interrupt-on-change feature is recommended for wake-up on key depression operation and operations where PORTB is only used for the interrupt-on-change feature. Polling of PORTB is not recommended while using the interrupt-on-change feature.

This interrupt-on-mismatch feature, together with software configurable pull-ups on these four pins, allow easy interface to a keypad and make it possible for wake-up on key depression. Refer to the application note, *AN552, "Implementing Wake-up on Key Stroke"* (DS00552).

RB0/INT is an external interrupt input pin and is configured using the INTEDG bit (OPTION_REG<6>).

RB0/INT is discussed in detail in **Section 14.11.1 "INT Interrupt"**.

FIGURE 4-5: BLOCK DIAGRAM OF RB7:RB4 PINS

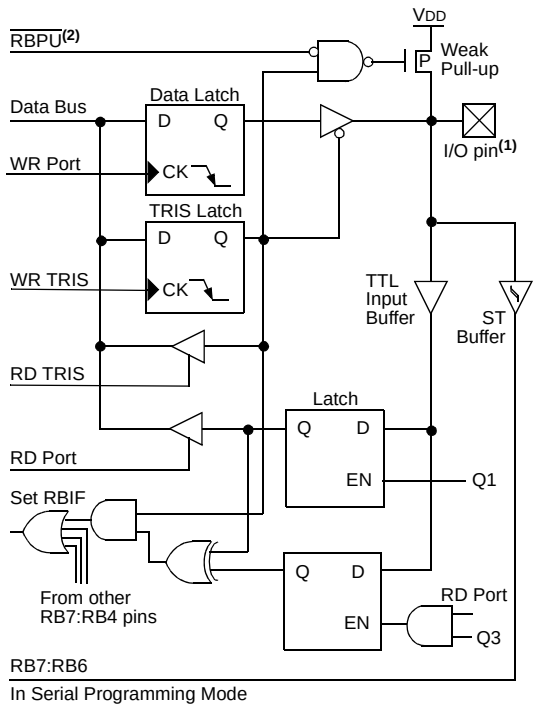

Note 1: I/O pins have diode protection to VDD and VSS.
2: To enable weak pull-ups, set the appropriate TRIS bit(s) and clear the $\overline{\text{RBPU}}$ bit (OPTION_REG<7>).

© 2001-2013 Microchip Technology Inc.

TABLE 4-3: PORTB FUNCTIONS

Name	Bit#	Buffer	Function
RB0/INT	bit 0	TTL/ST(1)	Input/output pin or external interrupt input. Internal software programmable weak pull-up.
RB1	bit 1	TTL	Input/output pin. Internal software programmable weak pull-up.
RB2	bit 2	TTL	Input/output pin. Internal software programmable weak pull-up.
RB3/PGM(3)	bit 3	TTL	Input/output pin or programming pin in LVP mode. Internal software programmable weak pull-up.
RB4	bit 4	TTL	Input/output pin (with interrupt-on-change). Internal software programmable weak pull-up.
RB5	bit 5	TTL	Input/output pin (with interrupt-on-change). Internal software programmable weak pull-up.
RB6/PGC	bit 6	TTL/ST(2)	Input/output pin (with interrupt-on-change) or in-circuit debugger pin. Internal software programmable weak pull-up. Serial programming clock.
RB7/PGD	bit 7	TTL/ST(2)	Input/output pin (with interrupt-on-change) or in-circuit debugger pin. Internal software programmable weak pull-up. Serial programming data.

Legend: TTL = TTL input, ST = Schmitt Trigger input

Note 1: This buffer is a Schmitt Trigger input when configured as the external interrupt.

2: This buffer is a Schmitt Trigger input when used in Serial Programming mode or in-circuit debugger.

3: Low-Voltage ICSP Programming (LVP) is enabled by default which disables the RB3 I/O function. LVP must be disabled to enable RB3 as an I/O pin and allow maximum compatibility to the other 28-pin and 40-pin mid-range devices.

TABLE 4-4: SUMMARY OF REGISTERS ASSOCIATED WITH PORTB

Address	Name	Bit 7	Bit 6	Bit 5	Bit 4	Bit 3	Bit 2	Bit 1	Bit 0	Value on: POR, BOR	Value on all other Resets
06h, 106h	PORTB	RB7	RB6	RB5	RB4	RB3	RB2	RB1	RB0	xxxx xxxx	uuuu uuuu
86h, 186h	TRISB	PORTB Data Direction Register								1111 1111	1111 1111
81h, 181h	OPTION_REG	RBPU	INTEDG	T0CS	T0SE	PSA	PS2	PS1	PS0	1111 1111	1111 1111

Legend: x = unknown, u = unchanged. Shaded cells are not used by PORTB.

4.3 PORTC and the TRISC Register

PORTC is an 8-bit wide, bidirectional port. The corresponding data direction register is TRISC. Setting a TRISC bit (= 1) will make the corresponding PORTC pin an input (i.e., put the corresponding output driver in a High-Impedance mode). Clearing a TRISC bit (= 0) will make the corresponding PORTC pin an output (i.e., put the contents of the output latch on the selected pin).

PORTC is multiplexed with several peripheral functions (Table 4-5). PORTC pins have Schmitt Trigger input buffers.

When the I^2C module is enabled, the PORTC<4:3> pins can be configured with normal I^2C levels, or with SMBus levels, by using the CKE bit (SSPSTAT<6>).

When enabling peripheral functions, care should be taken in defining TRIS bits for each PORTC pin. Some peripherals override the TRIS bit to make a pin an output, while other peripherals override the TRIS bit to make a pin an input. Since the TRIS bit override is in effect while the peripheral is enabled, read-modify-write instructions (BSF, BCF, XORWF) with TRISC as the destination, should be avoided. The user should refer to the corresponding peripheral section for the correct TRIS bit settings.

FIGURE 4-6: PORTC BLOCK DIAGRAM (PERIPHERAL OUTPUT OVERRIDE) RC<2:0>, RC<7:5>

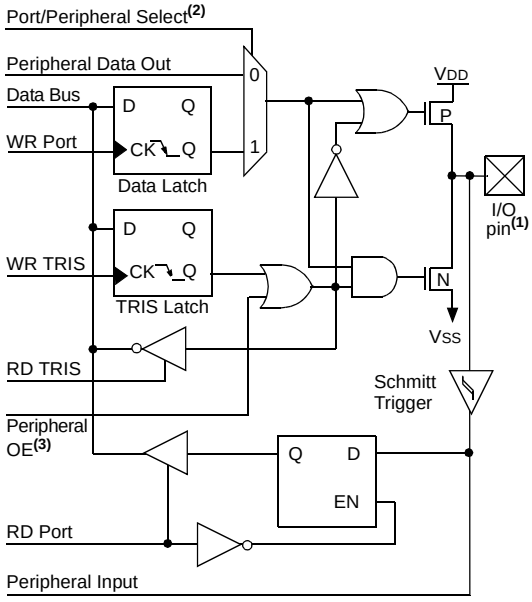

Note 1: I/O pins have diode protection to VDD and VSS.
2: Port/Peripheral Select signal selects between port data and peripheral output.
3: Peripheral OE (Output Enable) is only activated if Peripheral Select is active.

FIGURE 4-7: PORTC BLOCK DIAGRAM (PERIPHERAL OUTPUT OVERRIDE) RC<4:3>

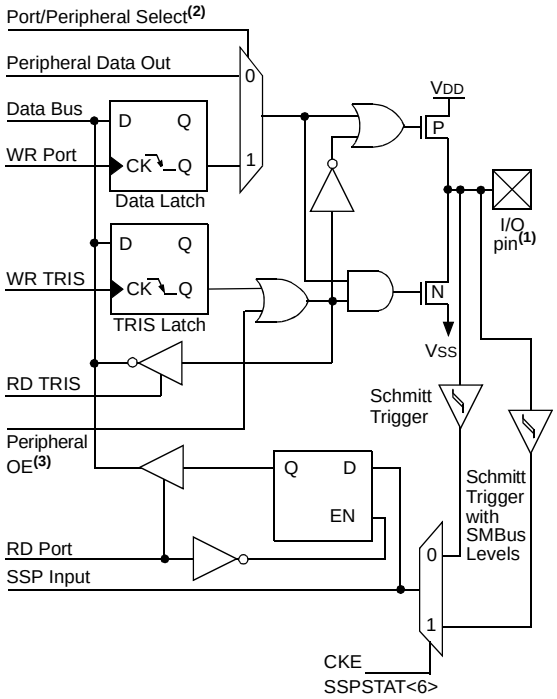

Note 1: I/O pins have diode protection to VDD and VSS.
2: Port/Peripheral Select signal selects between port data and peripheral output.
3: Peripheral OE (Output Enable) is only activated if Peripheral Select is active.

© 2001-2013 Microchip Technology Inc.

TABLE 4-5: PORTC FUNCTIONS

Name	Bit#	Buffer Type	Function
RC0/T1OSO/T1CKI	bit 0	ST	Input/output port pin or Timer1 oscillator output/Timer1 clock input.
RC1/T1OSI/CCP2	bit 1	ST	Input/output port pin or Timer1 oscillator input or Capture2 input/ Compare2 output/PWM2 output.
RC2/CCP1	bit 2	ST	Input/output port pin or Capture1 input/Compare1 output/ PWM1 output.
RC3/SCK/SCL	bit 3	ST	RC3 can also be the synchronous serial clock for both SPI and I^2C modes.
RC4/SDI/SDA	bit 4	ST	RC4 can also be the SPI data in (SPI mode) or data I/O (I^2C mode).
RC5/SDO	bit 5	ST	Input/output port pin or Synchronous Serial Port data output.
RC6/TX/CK	bit 6	ST	Input/output port pin or USART asynchronous transmit or synchronous clock.
RC7/RX/DT	bit 7	ST	Input/output port pin or USART asynchronous receive or synchronous data.

Legend: ST = Schmitt Trigger input

TABLE 4-6: SUMMARY OF REGISTERS ASSOCIATED WITH PORTC

Address	Name	Bit 7	Bit 6	Bit 5	Bit 4	Bit 3	Bit 2	Bit 1	Bit 0	Value on: POR, BOR	Value on all other Resets
07h	PORTC	RC7	RC6	RC5	RC4	RC3	RC2	RC1	RC0	xxxx xxxx	uuuu uuuu
87h	TRISC	PORTC Data Direction Register								1111 1111	1111 1111

Legend: x = unknown, u = unchanged

4.4 PORTD and TRISD Registers

Note:	PORTD and TRISD are not implemented on the 28-pin devices.

PORTD is an 8-bit port with Schmitt Trigger input buffers. Each pin is individually configurable as an input or output.

PORTD can be configured as an 8-bit wide microprocessor port (Parallel Slave Port) by setting control bit, PSPMODE (TRISE<4>). In this mode, the input buffers are TTL.

FIGURE 4-8: PORTD BLOCK DIAGRAM (IN I/O PORT MODE)

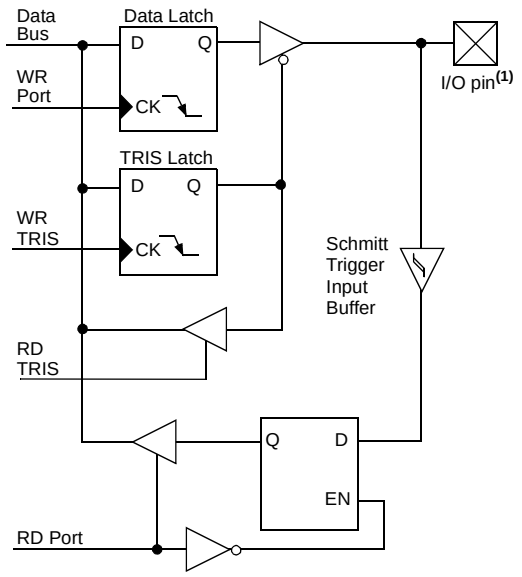

Note 1: I/O pins have protection diodes to VDD and VSS.

TABLE 4-7: PORTD FUNCTIONS

Name	Bit#	Buffer Type	Function
RD0/PSP0	bit 0	ST/TTL(1)	Input/output port pin or Parallel Slave Port bit 0.
RD1/PSP1	bit 1	ST/TTL(1)	Input/output port pin or Parallel Slave Port bit 1.
RD2/PSP2	bit2	ST/TTL(1)	Input/output port pin or Parallel Slave Port bit 2.
RD3/PSP3	bit 3	ST/TTL(1)	Input/output port pin or Parallel Slave Port bit 3.
RD4/PSP4	bit 4	ST/TTL(1)	Input/output port pin or Parallel Slave Port bit 4.
RD5/PSP5	bit 5	ST/TTL(1)	Input/output port pin or Parallel Slave Port bit 5.
RD6/PSP6	bit 6	ST/TTL(1)	Input/output port pin or Parallel Slave Port bit 6.
RD7/PSP7	bit 7	ST/TTL(1)	Input/output port pin or Parallel Slave Port bit 7.

Legend: ST = Schmitt Trigger input, TTL = TTL input

Note 1: Input buffers are Schmitt Triggers when in I/O mode and TTL buffers when in Parallel Slave Port mode.

TABLE 4-8: SUMMARY OF REGISTERS ASSOCIATED WITH PORTD

Address	Name	Bit 7	Bit 6	Bit 5	Bit 4	Bit 3	Bit 2	Bit 1	Bit 0	Value on: POR, BOR	Value on all other Resets
08h	PORTD	RD7	RD6	RD5	RD4	RD3	RD2	RD1	RD0	xxxx xxxx	uuuu uuuu
88h	TRISD	PORTD Data Direction Register								1111 1111	1111 1111
89h	TRISE	IBF	OBF	IBOV	PSPMODE	—	PORTE Data Direction Bits			0000 -111	0000 -111

Legend: x = unknown, u = unchanged, - = unimplemented, read as '0'. Shaded cells are not used by PORTD.

© 2001-2013 Microchip Technology Inc.

4.5 PORTE and TRISE Register

Note:	PORTE and TRISE are not implemented on the 28-pin devices.

PORTE has three pins (RE0/$\overline{RD}$/AN5, RE1/$\overline{WR}$/AN6 and RE2/$\overline{CS}$/AN7) which are individually configurable as inputs or outputs. These pins have Schmitt Trigger input buffers.

The PORTE pins become the I/O control inputs for the microprocessor port when bit PSPMODE (TRISE<4>) is set. In this mode, the user must make certain that the TRISE<2:0> bits are set and that the pins are configured as digital inputs. Also, ensure that ADCON1 is configured for digital I/O. In this mode, the input buffers are TTL.

Register 4-1 shows the TRISE register which also controls the Parallel Slave Port operation.

PORTE pins are multiplexed with analog inputs. When selected for analog input, these pins will read as '0's.

TRISE controls the direction of the RE pins, even when they are being used as analog inputs. The user must make sure to keep the pins configured as inputs when using them as analog inputs.

Note:	On a Power-on Reset, these pins are configured as analog inputs and read as '0'.

FIGURE 4-9: PORTE BLOCK DIAGRAM (IN I/O PORT MODE)

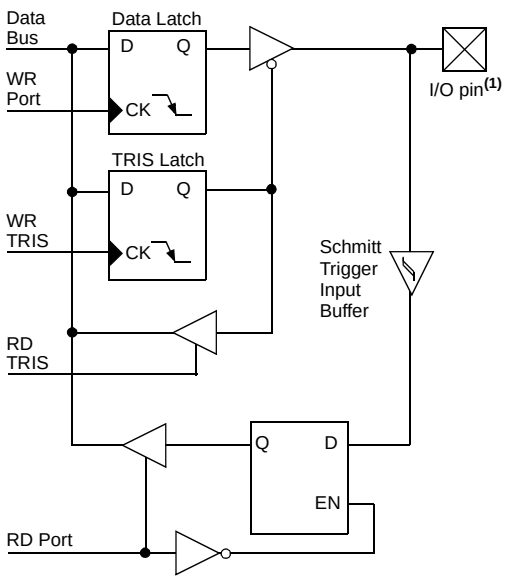

Note 1: I/O pins have protection diodes to VDD and VSS.

TABLE 4-9: PORTE FUNCTIONS

Name	Bit#	Buffer Type	Function
RE0/$\overline{RD}$/AN5	bit 0	ST/TTL(1)	I/O port pin or read control input in Parallel Slave Port mode or analog input: $\overline{RD}$ 1 = Idle 0 = Read operation. Contents of PORTD register are output to PORTD I/O pins (if chip selected).
RE1/$\overline{WR}$/AN6	bit 1	ST/TTL(1)	I/O port pin or write control input in Parallel Slave Port mode or analog input: $\overline{WR}$ 1 = Idle 0 = Write operation. Value of PORTD I/O pins is latched into PORTD register (if chip selected).
RE2/$\overline{CS}$/AN7	bit 2	ST/TTL(1)	I/O port pin or chip select control input in Parallel Slave Port mode or analog input: $\overline{CS}$ 1 = Device is not selected 0 = Device is selected

Legend: ST = Schmitt Trigger input, TTL = TTL input

Note 1: Input buffers are Schmitt Triggers when in I/O mode and TTL buffers when in Parallel Slave Port mode.

TABLE 4-10: SUMMARY OF REGISTERS ASSOCIATED WITH PORTE

Address	Name	Bit 7	Bit 6	Bit 5	Bit 4	Bit 3	Bit 2	Bit 1	Bit 0	Value on: POR, BOR	Value on all other Resets
09h	PORTE	—	—	—	—	—	RE2	RE1	RE0	---- -xxx	---- -uuu
89h	TRISE	IBF	OBF	IBOV	PSPMODE	—	PORTE Data Direction bits			0000 -111	0000 -111
9Fh	ADCON1	ADFM	ADCS2	—	—	PCFG3	PCFG2	PCFG1	PCFG0	00-- 0000	00-- 0000

Legend: x = unknown, u = unchanged, - = unimplemented, read as '0'. Shaded cells are not used by PORTE.

REGISTER 4-1: TRISE REGISTER (ADDRESS 89h)

R-0	R-0	R/W-0	R/W-0	U-0	R/W-1	R/W-1	R/W-1
IBF	OBF	IBOV	PSPMODE	—	Bit 2	Bit 1	Bit 0
bit 7							bit 0

Parallel Slave Port Status/Control Bits:

bit 7 **IBF:** Input Buffer Full Status bit
1 = A word has been received and is waiting to be read by the CPU
0 = No word has been received

bit 6 **OBF**: Output Buffer Full Status bit
1 = The output buffer still holds a previously written word
0 = The output buffer has been read

bit 5 **IBOV**: Input Buffer Overflow Detect bit (in Microprocessor mode)
1 = A write occurred when a previously input word has not been read (must be cleared in software)
0 = No overflow occurred

bit 4 **PSPMODE**: Parallel Slave Port Mode Select bit
1 = PORTD functions in Parallel Slave Port mode
0 = PORTD functions in general purpose I/O mode

bit 3 **Unimplemented**: Read as '0'

PORTE Data Direction Bits:

bit 2 **Bit 2**: Direction Control bit for pin RE2/$\overline{CS}$/AN7
1 = Input
0 = Output

bit 1 **Bit 1**: Direction Control bit for pin RE1/$\overline{WR}$/AN6
1 = Input
0 = Output

bit 0 **Bit 0**: Direction Control bit for pin RE0/$\overline{RD}$/AN5
1 = Input
0 = Output

Legend:			
R = Readable bit	W = Writable bit	U = Unimplemented bit, read as '0'	
- n = Value at POR	'1' = Bit is set	'0' = Bit is cleared	x = Bit is unknown

© 2001-2013 Microchip Technology Inc.

4.6 Parallel Slave Port

The Parallel Slave Port (PSP) is not implemented on the PIC16F873A or PIC16F876A.

PORTD operates as an 8-bit wide Parallel Slave Port, or microprocessor port, when control bit PSPMODE (TRISE<4>) is set. In Slave mode, it is asynchronously readable and writable by the external world through $\overline{RD}$ control input pin, RE0/$\overline{RD}$/AN5, and $\overline{WR}$ control input pin, RE1/$\overline{WR}$/AN6.

The PSP can directly interface to an 8-bit microprocessor data bus. The external microprocessor can read or write the PORTD latch as an 8-bit latch. Setting bit PSPMODE enables port pin RE0/$\overline{RD}$/AN5 to be the $\overline{RD}$ input, RE1/$\overline{WR}$/AN6 to be the $\overline{WR}$ input and RE2/$\overline{CS}$/AN7 to be the $\overline{CS}$ (Chip Select) input. For this functionality, the corresponding data direction bits of the TRISE register (TRISE<2:0>) must be configured as inputs (set). The A/D port configuration bits, PCFG3:PCFG0 (ADCON1<3:0>), must be set to configure pins RE2:RE0 as digital I/O.

There are actually two 8-bit latches: one for data output and one for data input. The user writes 8-bit data to the PORTD data latch and reads data from the port pin latch (note that they have the same address). In this mode, the TRISD register is ignored since the external device is controlling the direction of data flow.

A write to the PSP occurs when both the $\overline{CS}$ and $\overline{WR}$ lines are first detected low. When either the $\overline{CS}$ or $\overline{WR}$ lines become high (level triggered), the Input Buffer Full (IBF) status flag bit (TRISE<7>) is set on the Q4 clock cycle, following the next Q2 cycle, to signal the write is complete (Figure 4-11). The interrupt flag bit, PSPIF (PIR1<7>), is also set on the same Q4 clock cycle. IBF can only be cleared by reading the PORTD input latch. The Input Buffer Overflow (IBOV) status flag bit (TRISE<5>) is set if a second write to the PSP is attempted when the previous byte has not been read out of the buffer.

A read from the PSP occurs when both the $\overline{CS}$ and $\overline{RD}$ lines are first detected low. The Output Buffer Full (OBF) status flag bit (TRISE<6>) is cleared immediately (Figure 4-12), indicating that the PORTD latch is waiting to be read by the external bus. When either the $\overline{CS}$ or $\overline{RD}$ pin becomes high (level triggered), the interrupt flag bit PSPIF is set on the Q4 clock cycle, following the next Q2 cycle, indicating that the read is complete. OBF remains low until data is written to PORTD by the user firmware.

When not in PSP mode, the IBF and OBF bits are held clear. However, if flag bit IBOV was previously set, it must be cleared in firmware.

An interrupt is generated and latched into flag bit PSPIF when a read or write operation is completed. PSPIF must be cleared by the user in firmware and the interrupt can be disabled by clearing the interrupt enable bit PSPIE (PIE1<7>).

FIGURE 4-10: PORTD AND PORTE BLOCK DIAGRAM (PARALLEL SLAVE PORT)

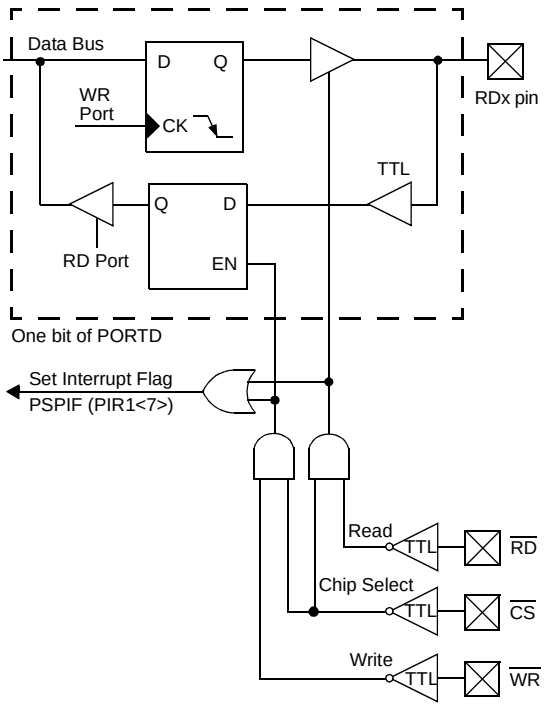

Note 1: I/O pins have protection diodes to VDD and VSS.

FIGURE 4-11: PARALLEL SLAVE PORT WRITE WAVEFORMS

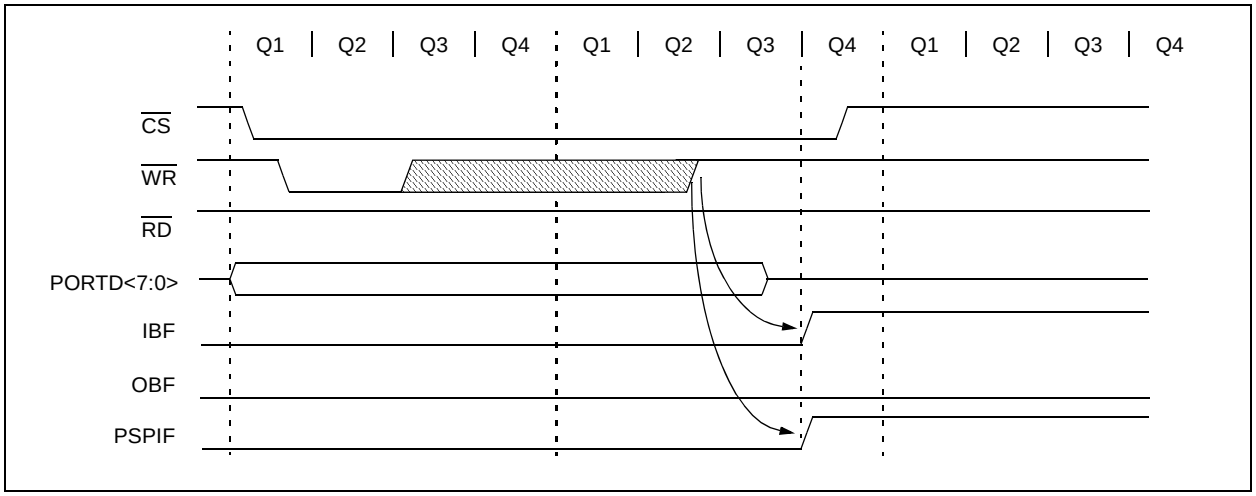

FIGURE 4-12: PARALLEL SLAVE PORT READ WAVEFORMS

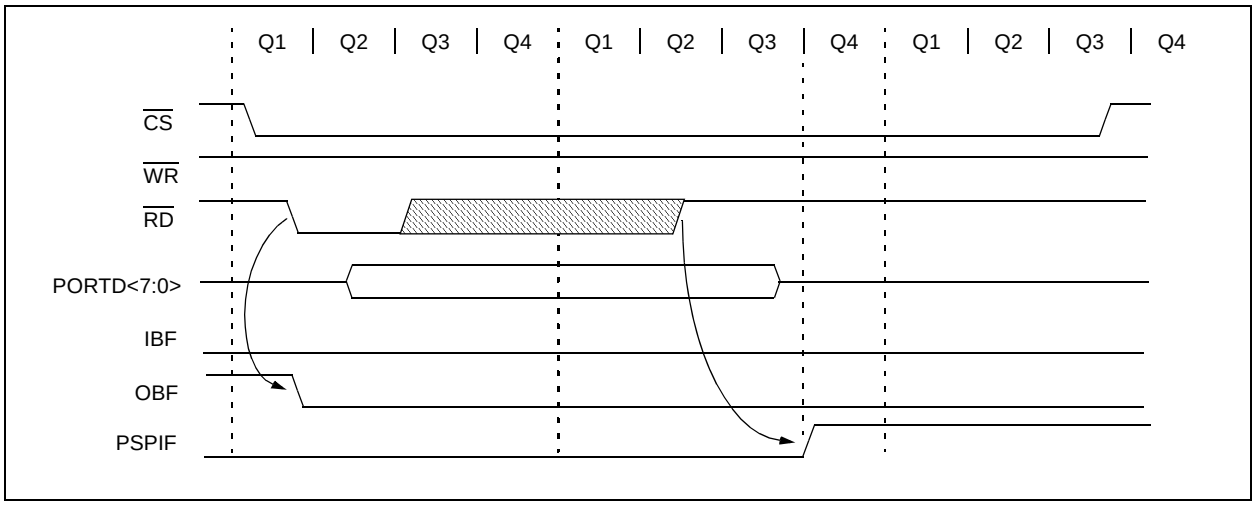

TABLE 4-11: REGISTERS ASSOCIATED WITH PARALLEL SLAVE PORT

Address	Name	Bit 7	Bit 6	Bit 5	Bit 4	Bit 3	Bit 2	Bit 1	Bit 0	Value on: POR, BOR	Value on all other Resets
08h	PORTD	Port Data Latch when written; Port pins when read								xxxx xxxx	uuuu uuuu
09h	PORTE	—	—	—	—	—	RE2	RE1	RE0	---- -xxx	---- -uuu
89h	TRISE	IBF	OBF	IBOV	PSPMODE	—	PORTE Data Direction bits			0000 -111	0000 -111
0Ch	PIR1	PSPIF(1)	ADIF	RCIF	TXIF	SSPIF	CCP1IF	TMR2IF	TMR1IF	0000 0000	0000 0000
8Ch	PIE1	PSPIE(1)	ADIE	RCIE	TXIE	SSPIE	CCP1IE	TMR2IE	TMR1IE	0000 0000	0000 0000
9Fh	ADCON1	ADFM	ADCS2	—	—	PCFG3	PCFG2	PCFG1	PCFG0	00-- 0000	00-- 0000

Legend: x = unknown, u = unchanged, - = unimplemented, read as '0'. Shaded cells are not used by the Parallel Slave Port.

Note 1: Bits PSPIE and PSPIF are reserved on the PIC16F873A/876A; always maintain these bits clear.

© 2001-2013 Microchip Technology Inc.

5.0 TIMER0 MODULE

The Timer0 module timer/counter has the following features:

- 8-bit timer/counter
- Readable and writable
- 8-bit software programmable prescaler
- Internal or external clock select
- Interrupt on overflow from FFh to 00h
- Edge select for external clock

Figure 5-1 is a block diagram of the Timer0 module and the prescaler shared with the WDT.

Additional information on the Timer0 module is available in the PIC® Mid-Range MCU Family Reference Manual (DS33023).

Timer mode is selected by clearing bit T0CS (OPTION_REG<5>). In Timer mode, the Timer0 module will increment every instruction cycle (without prescaler). If the TMR0 register is written, the increment is inhibited for the following two instruction cycles. The user can work around this by writing an adjusted value to the TMR0 register.

Counter mode is selected by setting bit T0CS (OPTION_REG<5>). In Counter mode, Timer0 will increment either on every rising or falling edge of pin RA4/T0CKI. The incrementing edge is determined by the Timer0 Source Edge Select bit, T0SE (OPTION_REG<4>). Clearing bit T0SE selects the rising edge. Restrictions on the external clock input are discussed in detail in **Section 5.2 “Using Timer0 with an External Clock”**.

The prescaler is mutually exclusively shared between the Timer0 module and the Watchdog Timer. The prescaler is not readable or writable. **Section 5.3 “Prescaler”** details the operation of the prescaler.

5.1 Timer0 Interrupt

The TMR0 interrupt is generated when the TMR0 register overflows from FFh to 00h. This overflow sets bit TMR0IF (INTCON<2>). The interrupt can be masked by clearing bit TMR0IE (INTCON<5>). Bit TMR0IF must be cleared in software by the Timer0 module Interrupt Service Routine before re-enabling this interrupt. The TMR0 interrupt cannot awaken the processor from Sleep since the timer is shut-off during Sleep.

FIGURE 5-1: BLOCK DIAGRAM OF THE TIMER0/WDT PRESCALER

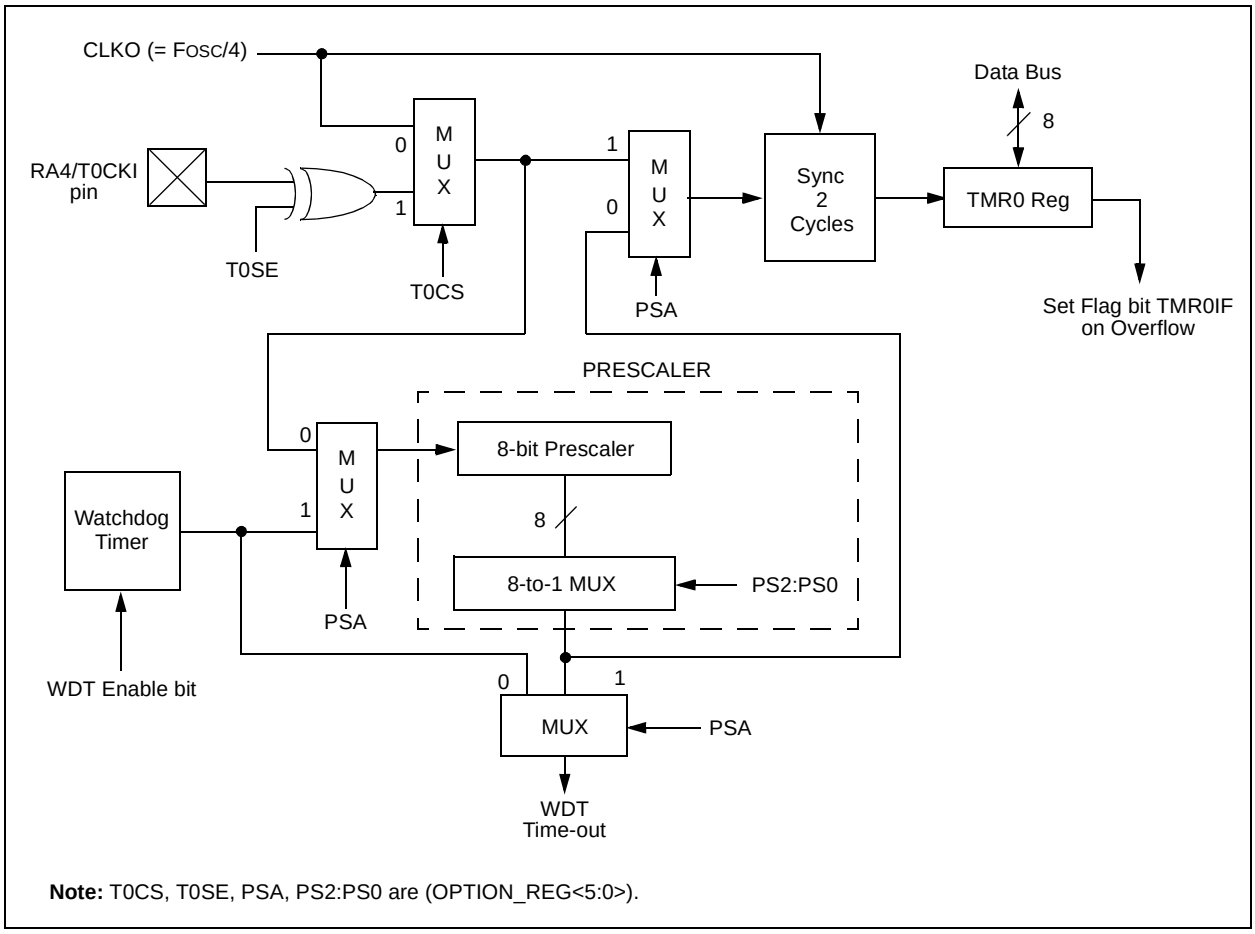

Note: T0CS, T0SE, PSA, PS2:PS0 are (OPTION_REG<5:0>).

5.2 Using Timer0 with an External Clock

When no prescaler is used, the external clock input is the same as the prescaler output. The synchronization of T0CKI with the internal phase clocks is accomplished by sampling the prescaler output on the Q2 and Q4 cycles of the internal phase clocks. Therefore, it is necessary for T0CKI to be high for at least 2 TOSC (and a small RC delay of 20 ns) and low for at least 2 TOSC (and a small RC delay of 20 ns). Refer to the electrical specification of the desired device.

5.3 Prescaler

There is only one prescaler available which is mutually exclusively shared between the Timer0 module and the Watchdog Timer. A prescaler assignment for the Timer0 module means that there is no prescaler for the Watchdog Timer and vice versa. This prescaler is not readable or writable (see Figure 5-1).

The PSA and PS2:PS0 bits (OPTION_REG<3:0>) determine the prescaler assignment and prescale ratio.

When assigned to the Timer0 module, all instructions writing to the TMR0 register (e.g., `CLRF 1`, `MOVWF 1`, `BSF 1,x`....etc.) will clear the prescaler. When assigned to WDT, a `CLRWDT` instruction will clear the prescaler along with the Watchdog Timer. The prescaler is not readable or writable.

> **Note:** Writing to TMR0 when the prescaler is assigned to Timer0 will clear the prescaler count, but will not change the prescaler assignment.

REGISTER 5-1: OPTION_REG REGISTER

R/W-1	R/W-1	R/W-1	R/W-1	R/W-1	R/W-1	R/W-1	R/W-1
$\overline{\text{RBPU}}$	INTEDG	T0CS	T0SE	PSA	PS2	PS1	PS0
bit 7							bit 0

bit 7 **$\overline{\text{RBPU}}$**

bit 6 **INTEDG**

bit 5 **T0CS**: TMR0 Clock Source Select bit
`1` = Transition on T0CKI pin
`0` = Internal instruction cycle clock (CLKO)

bit 4 **T0SE**: TMR0 Source Edge Select bit
`1` = Increment on high-to-low transition on T0CKI pin
`0` = Increment on low-to-high transition on T0CKI pin

bit 3 **PSA**: Prescaler Assignment bit
`1` = Prescaler is assigned to the WDT
`0` = Prescaler is assigned to the Timer0 module

bit 2-0 **PS2:PS0**: Prescaler Rate Select bits

Bit Value	TMR0 Rate	WDT Rate
000	1 : 2	1 : 1
001	1 : 4	1 : 2
010	1 : 8	1 : 4
011	1 : 16	1 : 8
100	1 : 32	1 : 16
101	1 : 64	1 : 32
110	1 : 128	1 : 64
111	1 : 256	1 : 128

Legend:			
R = Readable bit	W = Writable bit	U = Unimplemented bit, read as ‘0’	
- n = Value at POR	‘1’ = Bit is set	‘0’ = Bit is cleared	x = Bit is unknown

> **Note:** To avoid an unintended device Reset, the instruction sequence shown in the PIC® Mid-Range MCU Family Reference Manual (DS33023) must be executed when changing the prescaler assignment from Timer0 to the WDT. This sequence must be followed even if the WDT is disabled.

© 2001-2013 Microchip Technology Inc.

TABLE 5-1: REGISTERS ASSOCIATED WITH TIMER0

Address	Name	Bit 7	Bit 6	Bit 5	Bit 4	Bit 3	Bit 2	Bit 1	Bit 0	Value on: POR, BOR	Value on all other Resets
01h,101h	TMR0	Timer0 Module Register								xxxx xxxx	uuuu uuuu
0Bh,8Bh, 10Bh,18Bh	INTCON	GIE	PEIE	TMR0IE	INTE	RBIE	TMR0IF	INTF	RBIF	0000 000x	0000 000u
81h,181h	OPTION_REG	RBPU	INTEDG	T0CS	T0SE	PSA	PS2	PS1	PS0	1111 1111	1111 1111

Legend: x = unknown, u = unchanged, - = unimplemented locations read as '0'. Shaded cells are not used by Timer0.

NOTES:

© 2001-2013 Microchip Technology Inc.

6.0 TIMER1 MODULE

The Timer1 module is a 16-bit timer/counter consisting of two 8-bit registers (TMR1H and TMR1L) which are readable and writable. The TMR1 register pair (TMR1H:TMR1L) increments from 0000h to FFFFh and rolls over to 0000h. The TMR1 interrupt, if enabled, is generated on overflow which is latched in interrupt flag bit, TMR1IF (PIR1<0>). This interrupt can be enabled/disabled by setting/clearing TMR1 interrupt enable bit, TMR1IE (PIE1<0>).

Timer1 can operate in one of two modes:

- As a Timer
- As a Counter

The operating mode is determined by the clock select bit, TMR1CS (T1CON<1>).

In Timer mode, Timer1 increments every instruction cycle. In Counter mode, it increments on every rising edge of the external clock input.

Timer1 can be enabled/disabled by setting/clearing control bit, TMR1ON (T1CON<0>).

Timer1 also has an internal “Reset input”. This Reset can be generated by either of the two CCP modules (**Section 8.0 “Capture/Compare/PWM Modules”**). Register 6-1 shows the Timer1 Control register.

When the Timer1 oscillator is enabled (T1OSCEN is set), the RC1/T1OSI/CCP2 and RC0/T1OSO/T1CKI pins become inputs. That is, the TRISC<1:0> value is ignored and these pins read as ‘0’.

Additional information on timer modules is available in the PIC® Mid-Range MCU Family Reference Manual (DS33023).

REGISTER 6-1: T1CON: TIMER1 CONTROL REGISTER (ADDRESS 10h)

U-0	U-0	R/W-0	R/W-0	R/W-0	R/W-0	R/W-0	R/W-0
—	—	T1CKPS1	T1CKPS0	T1OSCEN	$\overline{\text{T1SYNC}}$	TMR1CS	TMR1ON
bit 7							bit 0

bit 7-6 **Unimplemented:** Read as ‘0’

bit 5-4 **T1CKPS1:T1CKPS0:** Timer1 Input Clock Prescale Select bits
11 = 1:8 prescale value
10 = 1:4 prescale value
01 = 1:2 prescale value
00 = 1:1 prescale value

bit 3 **T1OSCEN**: Timer1 Oscillator Enable Control bit
1 = Oscillator is enabled
0 = Oscillator is shut-off (the oscillator inverter is turned off to eliminate power drain)

bit 2 **$\overline{\text{T1SYNC}}$**: Timer1 External Clock Input Synchronization Control bit
When TMR1CS = 1:
1 = Do not synchronize external clock input
0 = Synchronize external clock input
When TMR1CS = 0:
This bit is ignored. Timer1 uses the internal clock when TMR1CS = 0.

bit 1 **TMR1CS**: Timer1 Clock Source Select bit
1 = External clock from pin RC0/T1OSO/T1CKI (on the rising edge)
0 = Internal clock (FOSC/4)

bit 0 **TMR1ON**: Timer1 On bit
1 = Enables Timer1
0 = Stops Timer1

Legend:			
R = Readable bit	W = Writable bit	U = Unimplemented bit, read as ‘0’	
- n = Value at POR	‘1’ = Bit is set	‘0’ = Bit is cleared	x = Bit is unknown

6.1 Timer1 Operation in Timer Mode

Timer mode is selected by clearing the TMR1CS (T1CON<1>) bit. In this mode, the input clock to the timer is FOSC/4. The synchronize control bit, $\overline{\text{T1SYNC}}$ (T1CON<2>), has no effect since the internal clock is always in sync.

6.2 Timer1 Counter Operation

Timer1 may operate in either a Synchronous, or an Asynchronous mode, depending on the setting of the TMR1CS bit.

When Timer1 is being incremented via an external source, increments occur on a rising edge. After Timer1 is enabled in Counter mode, the module must first have a falling edge before the counter begins to increment.

FIGURE 6-1: TIMER1 INCREMENTING EDGE

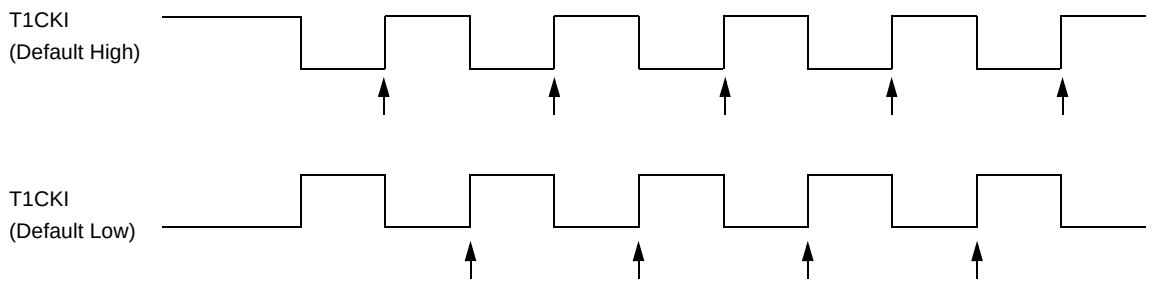

Note: Arrows indicate counter increments.

6.3 Timer1 Operation in Synchronized Counter Mode

Counter mode is selected by setting bit TMR1CS. In this mode, the timer increments on every rising edge of clock input on pin RC1/T1OSI/CCP2 when bit T1OSCEN is set, or on pin RC0/T1OSO/T1CKI when bit T1OSCEN is cleared.

If $\overline{\text{T1SYNC}}$ is cleared, then the external clock input is synchronized with internal phase clocks. The synchronization is done after the prescaler stage. The prescaler stage is an asynchronous ripple counter.

In this configuration, during Sleep mode, Timer1 will not increment even if the external clock is present since the synchronization circuit is shut-off. The prescaler, however, will continue to increment.

FIGURE 6-2: TIMER1 BLOCK DIAGRAM

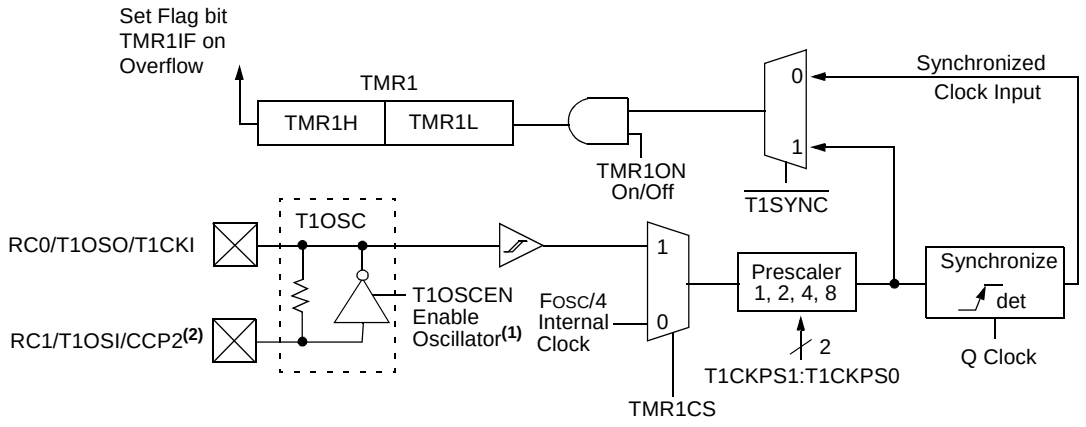

Note 1: When the T1OSCEN bit is cleared, the inverter is turned off. This eliminates power drain.

© 2001-2013 Microchip Technology Inc.

6.4 Timer1 Operation in Asynchronous Counter Mode

If control bit $\overline{\text{T1SYNC}}$ (T1CON<2>) is set, the external clock input is not synchronized. The timer continues to increment asynchronous to the internal phase clocks. The timer will continue to run during Sleep and can generate an interrupt-on-overflow which will wake-up the processor. However, special precautions in software are needed to read/write the timer.

In Asynchronous Counter mode, Timer1 cannot be used as a time base for capture or compare operations.

6.4.1 READING AND WRITING TIMER1 IN ASYNCHRONOUS COUNTER MODE

Reading TMR1H or TMR1L while the timer is running from an external asynchronous clock will ensure a valid read (taken care of in hardware). However, the user should keep in mind that reading the 16-bit timer in two 8-bit values itself, poses certain problems, since the timer may overflow between the reads.

For writes, it is recommended that the user simply stop the timer and write the desired values. A write contention may occur by writing to the timer registers while the register is incrementing. This may produce an unpredictable value in the timer register.

Reading the 16-bit value requires some care. Examples 12-2 and 12-3 in the PIC® Mid-Range MCU Family Reference Manual (DS33023) show how to read and write Timer1 when it is running in Asynchronous mode.

6.5 Timer1 Oscillator

A crystal oscillator circuit is built-in between pins T1OSI (input) and T1OSO (amplifier output). It is enabled by setting control bit, T1OSCEN (T1CON<3>). The oscillator is a low-power oscillator, rated up to 200 kHz. It will continue to run during Sleep. It is primarily intended for use with a 32 kHz crystal. Table 6-1 shows the capacitor selection for the Timer1 oscillator.

The Timer1 oscillator is identical to the LP oscillator. The user must provide a software time delay to ensure proper oscillator start-up.

TABLE 6-1: CAPACITOR SELECTION FOR THE TIMER1 OSCILLATOR

Osc Type	Freq.	C1	C2
LP	32 kHz	33 pF	33 pF
	100 kHz	15 pF	15 pF
	200 kHz	15 pF	15 pF
These values are for design guidance only.			
Crystals Tested:			
32.768 kHz	Epson C-001R32.768K-A		± 20 PPM
100 kHz	Epson C-2 100.00 KC-P		± 20 PPM
200 kHz	STD XTL 200.000 kHz		± 20 PPM

Note 1: Higher capacitance increases the stability of oscillator but also increases the start-up time.

2: Since each resonator/crystal has its own characteristics, the user should consult the resonator/crystal manufacturer for appropriate values of external components.

6.6 Resetting Timer1 Using a CCP Trigger Output

If the CCP1 or CCP2 module is configured in Compare mode to generate a “special event trigger” (CCP1M3:CCP1M0 = `1011`), this signal will reset Timer1.

> **Note:** The special event triggers from the CCP1 and CCP2 modules will not set interrupt flag bit, TMR1IF (PIR1<0>).

Timer1 must be configured for either Timer or Synchronized Counter mode to take advantage of this feature. If Timer1 is running in Asynchronous Counter mode, this Reset operation may not work.

In the event that a write to Timer1 coincides with a special event trigger from CCP1 or CCP2, the write will take precedence.

In this mode of operation, the CCPRxH:CCPRxL register pair effectively becomes the period register for Timer1.

6.7 Resetting of Timer1 Register Pair (TMR1H, TMR1L)

TMR1H and TMR1L registers are not reset to 00h on a POR, or any other Reset, except by the CCP1 and CCP2 special event triggers.

T1CON register is reset to 00h on a Power-on Reset, or a Brown-out Reset, which shuts off the timer and leaves a 1:1 prescale. In all other Resets, the register is unaffected.

6.8 Timer1 Prescaler

The prescaler counter is cleared on writes to the TMR1H or TMR1L registers.

TABLE 6-2: REGISTERS ASSOCIATED WITH TIMER1 AS A TIMER/COUNTER

Address	Name	Bit 7	Bit 6	Bit 5	Bit 4	Bit 3	Bit 2	Bit 1	Bit 0	Value on: POR, BOR	Value on all other Resets
0Bh,8Bh, 10Bh, 18Bh	INTCON	GIE	PEIE	TMR0IE	INTE	RBIE	TMR0IF	INTF	RBIF	0000 000x	0000 000u
0Ch	PIR1	PSPIF(1)	ADIF	RCIF	TXIF	SSPIF	CCP1IF	TMR2IF	TMR1IF	0000 0000	0000 0000
8Ch	PIE1	PSPIE(1)	ADIE	RCIE	TXIE	SSPIE	CCP1IE	TMR2IE	TMR1IE	0000 0000	0000 0000
0Eh	TMR1L	Holding Register for the Least Significant Byte of the 16-bit TMR1 Register								xxxx xxxx	uuuu uuuu
0Fh	TMR1H	Holding Register for the Most Significant Byte of the 16-bit TMR1 Register								xxxx xxxx	uuuu uuuu
10h	T1CON	—	—	T1CKPS1	T1CKPS0	T1OSCEN	$\overline{\text{T1SYNC}}$	TMR1CS	TMR1ON	--00 0000	--uu uuuu

Legend: x = unknown, u = unchanged, - = unimplemented, read as '0'. Shaded cells are not used by the Timer1 module.

Note 1: Bits PSPIE and PSPIF are reserved on the 28-pin devices; always maintain these bits clear.

© 2001-2013 Microchip Technology Inc.

7.0 TIMER2 MODULE

Timer2 is an 8-bit timer with a prescaler and a postscaler. It can be used as the PWM time base for the PWM mode of the CCP module(s). The TMR2 register is readable and writable and is cleared on any device Reset.

The input clock (FOSC/4) has a prescale option of 1:1, 1:4 or 1:16, selected by control bits T2CKPS1:T2CKPS0 (T2CON<1:0>).

The Timer2 module has an 8-bit period register, PR2. Timer2 increments from 00h until it matches PR2 and then resets to 00h on the next increment cycle. PR2 is a readable and writable register. The PR2 register is initialized to FFh upon Reset.

The match output of TMR2 goes through a 4-bit postscaler (which gives a 1:1 to 1:16 scaling inclusive) to generate a TMR2 interrupt (latched in flag bit, TMR2IF (PIR1<1>)).

Timer2 can be shut-off by clearing control bit, TMR2ON (T2CON<2>), to minimize power consumption.

Register 7-1 shows the Timer2 Control register.

Additional information on timer modules is available in the PIC® Mid-Range MCU Family Reference Manual (DS33023).

FIGURE 7-1: TIMER2 BLOCK DIAGRAM

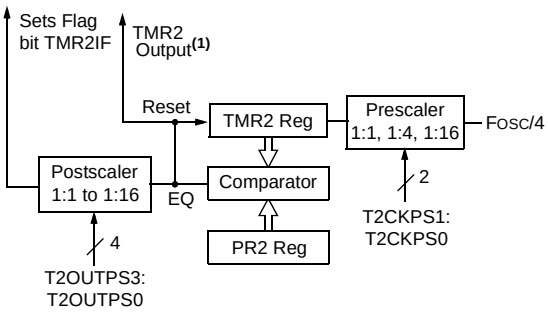

Note 1: TMR2 register output can be software selected by the SSP module as a baud clock.

REGISTER 7-1: T2CON: TIMER2 CONTROL REGISTER (ADDRESS 12h)

U-0	R/W-0	R/W-0	R/W-0	R/W-0	R/W-0	R/W-0	R/W-0
—	TOUTPS3	TOUTPS2	TOUTPS1	TOUTPS0	TMR2ON	T2CKPS1	T2CKPS0
bit 7							bit 0

bit 7 **Unimplemented:** Read as '0'

bit 6-3 **TOUTPS3:TOUTPS0**: Timer2 Output Postscale Select bits
0000 = 1:1 postscale
0001 = 1:2 postscale
0010 = 1:3 postscale
•
•
•
1111 = 1:16 postscale

bit 2 **TMR2ON**: Timer2 On bit
1 = Timer2 is on
0 = Timer2 is off

bit 1-0 **T2CKPS1:T2CKPS0**: Timer2 Clock Prescale Select bits
00 = Prescaler is 1
01 = Prescaler is 4
1x = Prescaler is 16

Legend:			
R = Readable bit	W = Writable bit	U = Unimplemented bit, read as '0'	
- n = Value at POR	'1' = Bit is set	'0' = Bit is cleared	x = Bit is unknown

7.1 Timer2 Prescaler and Postscaler

The prescaler and postscaler counters are cleared when any of the following occurs:

- a write to the TMR2 register
- a write to the T2CON register
- any device Reset (POR, $\overline{\text{MCLR}}$ Reset, WDT Reset or BOR)

TMR2 is not cleared when T2CON is written.

7.2 Output of TMR2

The output of TMR2 (before the postscaler) is fed to the SSP module, which optionally uses it to generate the shift clock.

TABLE 7-1: REGISTERS ASSOCIATED WITH TIMER2 AS A TIMER/COUNTER

Address	Name	Bit 7	Bit 6	Bit 5	Bit 4	Bit 3	Bit 2	Bit 1	Bit 0	Value on: POR, BOR	Value on all other Resets
0Bh, 8Bh, 10Bh, 18Bh	INTCON	GIE	PEIE	TMR0IE	INTE	RBIE	TMR0IF	INTF	RBIF	0000 000x	0000 000u
0Ch	PIR1	PSPIF(1)	ADIF	RCIF	TXIF	SSPIF	CCP1IF	TMR2IF	TMR1IF	0000 0000	0000 0000
8Ch	PIE1	PSPIE(1)	ADIE	RCIE	TXIE	SSPIE	CCP1IE	TMR2IE	TMR1IE	0000 0000	0000 0000
11h	TMR2	Timer2 Module's Register								0000 0000	0000 0000
12h	T2CON	—	TOUTPS3	TOUTPS2	TOUTPS1	TOUTPS0	TMR2ON	T2CKPS1	T2CKPS0	-000 0000	-000 0000
92h	PR2	Timer2 Period Register								1111 1111	1111 1111

Legend: x = unknown, u = unchanged, - = unimplemented, read as '0'. Shaded cells are not used by the Timer2 module.

Note 1: Bits PSPIE and PSPIF are reserved on 28-pin devices; always maintain these bits clear.

© 2001-2013 Microchip Technology Inc.

8.0 CAPTURE/COMPARE/PWM MODULES

Each Capture/Compare/PWM (CCP) module contains a 16-bit register which can operate as a:

- 16-bit Capture register
- 16-bit Compare register
- PWM Master/Slave Duty Cycle register

Both the CCP1 and CCP2 modules are identical in operation, with the exception being the operation of the special event trigger. Table 8-1 and Table 8-2 show the resources and interactions of the CCP module(s). In the following sections, the operation of a CCP module is described with respect to CCP1. CCP2 operates the same as CCP1 except where noted.

CCP1 Module:

Capture/Compare/PWM Register 1 (CCPR1) is comprised of two 8-bit registers: CCPR1L (low byte) and CCPR1H (high byte). The CCP1CON register controls the operation of CCP1. The special event trigger is generated by a compare match and will reset Timer1.

CCP2 Module:

Capture/Compare/PWM Register 2 (CCPR2) is comprised of two 8-bit registers: CCPR2L (low byte) and CCPR2H (high byte). The CCP2CON register controls the operation of CCP2. The special event trigger is generated by a compare match and will reset Timer1 and start an A/D conversion (if the A/D module is enabled).

Additional information on CCP modules is available in the PIC® Mid-Range MCU Family Reference Manual (DS33023) and in application note *AN594, "Using the CCP Module(s)"* (DS00594).

TABLE 8-1: CCP MODE – TIMER RESOURCES REQUIRED

CCP Mode	Timer Resource
Capture	Timer1
Compare	Timer1
PWM	Timer2

TABLE 8-2: INTERACTION OF TWO CCP MODULES

CCPx Mode	CCPy Mode	Interaction
Capture	Capture	Same TMR1 time base
Capture	Compare	The compare should be configured for the special event trigger which clears TMR1
Compare	Compare	The compare(s) should be configured for the special event trigger which clears TMR1
PWM	PWM	The PWMs will have the same frequency and update rate (TMR2 interrupt)
PWM	Capture	None
PWM	Compare	None

REGISTER 8-1: CCP1CON REGISTER/CCP2CON REGISTER (ADDRESS 17h/1Dh)

U-0	U-0	R/W-0	R/W-0	R/W-0	R/W-0	R/W-0	R/W-0
—	—	CCPxX	CCPxY	CCPxM3	CCPxM2	CCPxM1	CCPxM0
bit 7							bit 0

bit 7-6 **Unimplemented:** Read as '0'

bit 5-4 **CCPxX:CCPxY**: PWM Least Significant bits

Capture mode:
Unused.

Compare mode:
Unused.

PWM mode:
These bits are the two LSbs of the PWM duty cycle. The eight MSbs are found in CCPRxL.

bit 3-0 **CCPxM3:CCPxM0**: CCPx Mode Select bits

0000 = Capture/Compare/PWM disabled (resets CCPx module)
0100 = Capture mode, every falling edge
0101 = Capture mode, every rising edge
0110 = Capture mode, every 4th rising edge
0111 = Capture mode, every 16th rising edge
1000 = Compare mode, set output on match (CCPxIF bit is set)
1001 = Compare mode, clear output on match (CCPxIF bit is set)
1010 = Compare mode, generate software interrupt on match (CCPxIF bit is set, CCPx pin is unaffected)
1011 = Compare mode, trigger special event (CCPxIF bit is set, CCPx pin is unaffected); CCP1 resets TMR1; CCP2 resets TMR1 and starts an A/D conversion (if A/D module is enabled)
11xx = PWM mode

Legend:			
R = Readable bit	W = Writable bit	U = Unimplemented bit, read as '0'	
- n = Value at POR	'1' = Bit is set	'0' = Bit is cleared	x = Bit is unknown

© 2001-2013 Microchip Technology Inc.

8.1 Capture Mode

In Capture mode, CCPR1H:CCPR1L captures the 16-bit value of the TMR1 register when an event occurs on pin RC2/CCP1. An event is defined as one of the following:

- Every falling edge
- Every rising edge
- Every 4th rising edge
- Every 16th rising edge

The type of event is configured by control bits, CCP1M3:CCP1M0 (CCPxCON<3:0>). When a capture is made, the interrupt request flag bit, CCP1IF (PIR1<2>), is set. The interrupt flag must be cleared in software. If another capture occurs before the value in register CCPR1 is read, the old captured value is overwritten by the new value.

8.1.1 CCP PIN CONFIGURATION

In Capture mode, the RC2/CCP1 pin should be configured as an input by setting the TRISC<2> bit.

Note:	If the RC2/CCP1 pin is configured as an output, a write to the port can cause a Capture condition.

FIGURE 8-1: CAPTURE MODE OPERATION BLOCK DIAGRAM

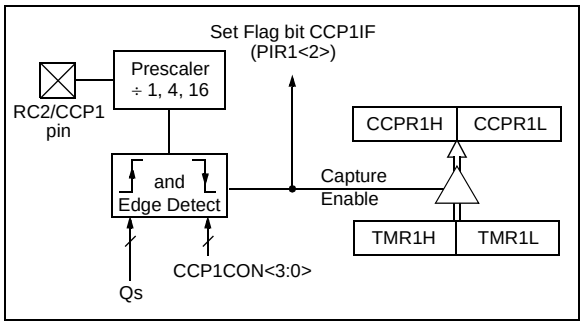

8.1.2 TIMER1 MODE SELECTION

Timer1 must be running in Timer mode, or Synchronized Counter mode, for the CCP module to use the capture feature. In Asynchronous Counter mode, the capture operation may not work.

8.1.3 SOFTWARE INTERRUPT

When the Capture mode is changed, a false capture interrupt may be generated. The user should keep bit CCP1IE (PIE1<2>) clear to avoid false interrupts and should clear the flag bit, CCP1IF, following any such change in operating mode.

8.1.4 CCP PRESCALER

There are four prescaler settings, specified by bits CCP1M3:CCP1M0. Whenever the CCP module is turned off, or the CCP module is not in Capture mode, the prescaler counter is cleared. Any Reset will clear the prescaler counter.

Switching from one capture prescaler to another may generate an interrupt. Also, the prescaler counter will not be cleared, therefore, the first capture may be from a non-zero prescaler. Example 8-1 shows the recommended method for switching between capture prescalers. This example also clears the prescaler counter and will not generate the “false” interrupt.

EXAMPLE 8-1: CHANGING BETWEEN CAPTURE PRESCALERS

```
CLRF    CCP1CON      ; Turn CCP module off
MOVLW   NEW_CAPT_PS  ; Load the W reg with
                     ; the new prescaler
                     ; move value and CCP ON
MOVWF   CCP1CON      ; Load CCP1CON with this
                     ; value
```

8.2 Compare Mode

In Compare mode, the 16-bit CCPR1 register value is constantly compared against the TMR1 register pair value. When a match occurs, the RC2/CCP1 pin is:

- Driven high
- Driven low
- Remains unchanged

The action on the pin is based on the value of control bits, CCP1M3:CCP1M0 (CCP1CON<3:0>). At the same time, interrupt flag bit CCP1IF is set.

FIGURE 8-2: COMPARE MODE OPERATION BLOCK DIAGRAM

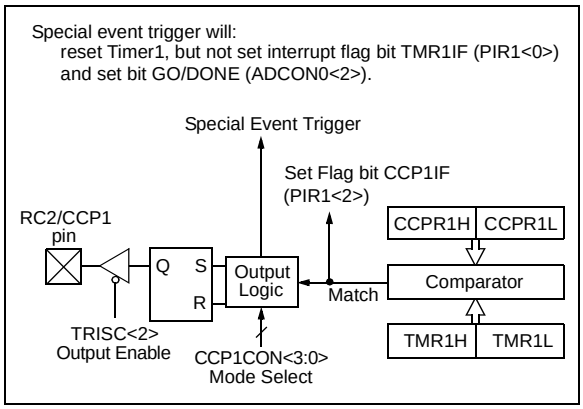

8.2.1 CCP PIN CONFIGURATION

The user must configure the RC2/CCP1 pin as an output by clearing the TRISC<2> bit.

Note:	Clearing the CCP1CON register will force the RC2/CCP1 compare output latch to the default low level. This is not the PORTC I/O data latch.

8.2.2 TIMER1 MODE SELECTION

Timer1 must be running in Timer mode, or Synchronized Counter mode, if the CCP module is using the compare feature. In Asynchronous Counter mode, the compare operation may not work.

8.2.3 SOFTWARE INTERRUPT MODE

When Generate Software Interrupt mode is chosen, the CCP1 pin is not affected. The CCPIF bit is set, causing a CCP interrupt (if enabled).

8.2.4 SPECIAL EVENT TRIGGER

In this mode, an internal hardware trigger is generated which may be used to initiate an action.

The special event trigger output of CCP1 resets the TMR1 register pair. This allows the CCPR1 register to effectively be a 16-bit programmable period register for Timer1.

The special event trigger output of CCP2 resets the TMR1 register pair and starts an A/D conversion (if the A/D module is enabled).

Note:	The special event trigger from the CCP1 and CCP2 modules will not set interrupt flag bit TMR1IF (PIR1<0>).

© 2001-2013 Microchip Technology Inc.

8.3 PWM Mode (PWM)

In Pulse Width Modulation mode, the CCPx pin produces up to a 10-bit resolution PWM output. Since the CCP1 pin is multiplexed with the PORTC data latch, the TRISC<2> bit must be cleared to make the CCP1 pin an output.

Note:	Clearing the CCP1CON register will force the CCP1 PWM output latch to the default low level. This is not the PORTC I/O data latch.

Figure 8-3 shows a simplified block diagram of the CCP module in PWM mode.

For a step-by-step procedure on how to set up the CCP module for PWM operation, see **Section 8.3.3 "Setup for PWM Operation"**.

FIGURE 8-3: SIMPLIFIED PWM BLOCK DIAGRAM

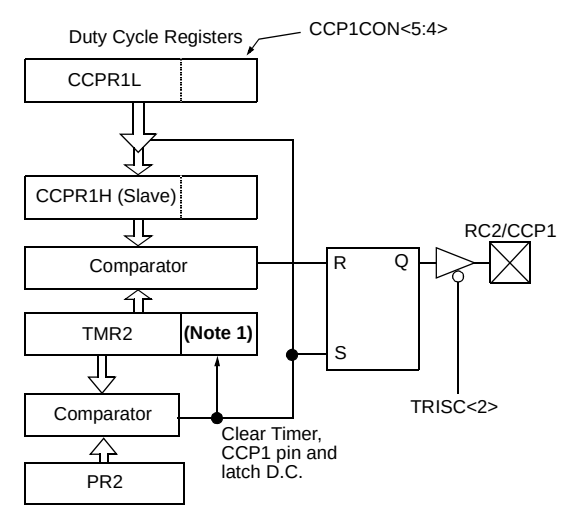

Note 1: The 8-bit timer is concatenated with 2-bit internal Q clock, or 2 bits of the prescaler, to create 10-bit time base.

A PWM output (Figure 8-4) has a time base (period) and a time that the output stays high (duty cycle). The frequency of the PWM is the inverse of the period (1/period).

FIGURE 8-4: PWM OUTPUT

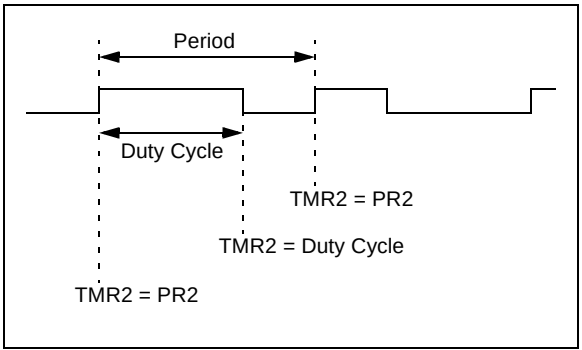

8.3.1 PWM PERIOD

The PWM period is specified by writing to the PR2 register. The PWM period can be calculated using the following formula:

$$\text{PWM Period} = [(PR2) + 1] \cdot 4 \cdot T_{OSC} \cdot (\text{TMR2 Prescale Value})$$

PWM frequency is defined as 1/[PWM period].

When TMR2 is equal to PR2, the following three events occur on the next increment cycle:

- TMR2 is cleared
- The CCP1 pin is set (exception: if PWM duty cycle = 0%, the CCP1 pin will not be set)
- The PWM duty cycle is latched from CCPR1L into CCPR1H

Note:	The Timer2 postscaler (see **Section 7.1 "Timer2 Prescaler and Postscaler"**) is not used in the determination of the PWM frequency. The postscaler could be used to have a servo update rate at a different frequency than the PWM output.

8.3.2 PWM DUTY CYCLE

The PWM duty cycle is specified by writing to the CCPR1L register and to the CCP1CON<5:4> bits. Up to 10-bit resolution is available. The CCPR1L contains the eight MSbs and the CCP1CON<5:4> contains the two LSbs. This 10-bit value is represented by CCPR1L:CCP1CON<5:4>. The following equation is used to calculate the PWM duty cycle in time:

$$\text{PWM Duty Cycle} = (CCPR1L{:}CCP1CON\langle 5{:}4\rangle) \cdot T_{OSC} \cdot (\text{TMR2 Prescale Value})$$

CCPR1L and CCP1CON<5:4> can be written to at any time, but the duty cycle value is not latched into CCPR1H until after a match between PR2 and TMR2 occurs (i.e., the period is complete). In PWM mode, CCPR1H is a read-only register.

The CCPR1H register and a 2-bit internal latch are used to double-buffer the PWM duty cycle. This double-buffering is essential for glitch-free PWM operation.

When the CCPR1H and 2-bit latch match TMR2, concatenated with an internal 2-bit Q clock or 2 bits of the TMR2 prescaler, the CCP1 pin is cleared.

The maximum PWM resolution (bits) for a given PWM frequency is given by the following formula.

EQUATION 8-1:

$$\text{Resolution} = \frac{\log\left(\frac{F_{OSC}}{F_{PWM}}\right)}{\log(2)} \text{ bits}$$

Note:	If the PWM duty cycle value is longer than the PWM period, the CCP1 pin will not be cleared.

8.3.3 SETUP FOR PWM OPERATION

The following steps should be taken when configuring the CCP module for PWM operation:

1. Set the PWM period by writing to the PR2 register.
2. Set the PWM duty cycle by writing to the CCPR1L register and CCP1CON<5:4> bits.
3. Make the CCP1 pin an output by clearing the TRISC<2> bit.
4. Set the TMR2 prescale value and enable Timer2 by writing to T2CON.
5. Configure the CCP1 module for PWM operation.

TABLE 8-3: EXAMPLE PWM FREQUENCIES AND RESOLUTIONS AT 20 MHz

PWM Frequency	1.22 kHz	4.88 kHz	19.53 kHz	78.12kHz	156.3 kHz	208.3 kHz
Timer Prescaler (1, 4, 16)	16	4	1	1	1	1
PR2 Value	0xFFh	0xFFh	0xFFh	0x3Fh	0x1Fh	0x17h
Maximum Resolution (bits)	10	10	10	8	7	5.5

TABLE 8-4: REGISTERS ASSOCIATED WITH CAPTURE, COMPARE AND TIMER1

Address	Name	Bit 7	Bit 6	Bit 5	Bit 4	Bit 3	Bit 2	Bit 1	Bit 0	Value on: POR, BOR	Value on all other Resets
0Bh,8Bh, 10Bh, 18Bh	INTCON	GIE	PEIE	TMR0IE	INTE	RBIE	TMR0IF	INTF	RBIF	0000 000x	0000 000u
0Ch	PIR1	PSPIF(1)	ADIF	RCIF	TXIF	SSPIF	CCP1IF	TMR2IF	TMR1IF	0000 0000	0000 0000
0Dh	PIR2	—	—	—	—	—	—	—	CCP2IF	---- ---0	---- ---0
8Ch	PIE1	PSPIE(1)	ADIE	RCIE	TXIE	SSPIE	CCP1IE	TMR2IE	TMR1IE	0000 0000	0000 0000
8Dh	PIE2	—	—	—	—	—	—	—	CCP2IE	---- ---0	---- ---0
87h	TRISC	PORTC Data Direction Register								1111 1111	1111 1111
0Eh	TMR1L	Holding Register for the Least Significant Byte of the 16-bit TMR1 Register								xxxx xxxx	uuuu uuuu
0Fh	TMR1H	Holding Register for the Most Significant Byte of the 16-bit TMR1 Register								xxxx xxxx	uuuu uuuu
10h	T1CON	—	—	T1CKPS1	T1CKPS0	T1OSCEN	$\overline{\text{T1SYNC}}$	TMR1CS	TMR1ON	--00 0000	--uu uuuu
15h	CCPR1L	Capture/Compare/PWM Register 1 (LSB)								xxxx xxxx	uuuu uuuu
16h	CCPR1H	Capture/Compare/PWM Register 1 (MSB)								xxxx xxxx	uuuu uuuu
17h	CCP1CON	—	—	CCP1X	CCP1Y	CCP1M3	CCP1M2	CCP1M1	CCP1M0	--00 0000	--00 0000
1Bh	CCPR2L	Capture/Compare/PWM Register 2 (LSB)								xxxx xxxx	uuuu uuuu
1Ch	CCPR2H	Capture/Compare/PWM Register 2 (MSB)								xxxx xxxx	uuuu uuuu
1Dh	CCP2CON	—	—	CCP2X	CCP2Y	CCP2M3	CCP2M2	CCP2M1	CCP2M0	--00 0000	--00 0000

Legend: x = unknown, u = unchanged, - = unimplemented, read as '0'. Shaded cells are not used by Capture and Timer1.

Note 1: The PSP is not implemented on 28-pin devices; always maintain these bits clear.

© 2001-2013 Microchip Technology Inc.

TABLE 8-5: REGISTERS ASSOCIATED WITH PWM AND TIMER2

Address	Name	Bit 7	Bit 6	Bit 5	Bit 4	Bit 3	Bit 2	Bit 1	Bit 0	Value on: POR, BOR	Value on all other Resets
0Bh,8Bh, 10Bh, 18Bh	INTCON	GIE	PEIE	TMR0IE	INTE	RBIE	TMR0IF	INTF	RBIF	0000 000x	0000 000u
0Ch	PIR1	PSPIF(1)	ADIF	RCIF	TXIF	SSPIF	CCP1IF	TMR2IF	TMR1IF	0000 0000	0000 0000
0Dh	PIR2	—	—	—	—	—	—	—	CCP2IF	---- ---0	---- ---0
8Ch	PIE1	PSPIE(1)	ADIE	RCIE	TXIE	SSPIE	CCP1IE	TMR2IE	TMR1IE	0000 0000	0000 0000
8Dh	PIE2	—	—	—	—	—	—	—	CCP2IE	---- ---0	---- ---0
87h	TRISC	PORTC Data Direction Register								1111 1111	1111 1111
11h	TMR2	Timer2 Module's Register								0000 0000	0000 0000
92h	PR2	Timer2 Module's Period Register								1111 1111	1111 1111
12h	T2CON	—	TOUTPS3	TOUTPS2	TOUTPS1	TOUTPS0	TMR2ON	T2CKPS1	T2CKPS0	-000 0000	-000 0000
15h	CCPR1L	Capture/Compare/PWM Register 1 (LSB)								xxxx xxxx	uuuu uuuu
16h	CCPR1H	Capture/Compare/PWM Register 1 (MSB)								xxxx xxxx	uuuu uuuu
17h	CCP1CON	—	—	CCP1X	CCP1Y	CCP1M3	CCP1M2	CCP1M1	CCP1M0	--00 0000	--00 0000
1Bh	CCPR2L	Capture/Compare/PWM Register 2 (LSB)								xxxx xxxx	uuuu uuuu
1Ch	CCPR2H	Capture/Compare/PWM Register 2 (MSB)								xxxx xxxx	uuuu uuuu
1Dh	CCP2CON	—	—	CCP2X	CCP2Y	CCP2M3	CCP2M2	CCP2M1	CCP2M0	--00 0000	--00 0000

Legend: x = unknown, u = unchanged, - = unimplemented, read as '0'. Shaded cells are not used by PWM and Timer2.

Note 1: Bits PSPIE and PSPIF are reserved on 28-pin devices; always maintain these bits clear.

NOTES:

© 2001-2013 Microchip Technology Inc.

9.0 MASTER SYNCHRONOUS SERIAL PORT (MSSP) MODULE

9.1 Master SSP (MSSP) Module Overview

The Master Synchronous Serial Port (MSSP) module is a serial interface, useful for communicating with other peripheral or microcontroller devices. These peripheral devices may be serial EEPROMs, shift registers, display drivers, A/D converters, etc. The MSSP module can operate in one of two modes:

- Serial Peripheral Interface (SPI)
- Inter-Integrated Circuit (I^2C)
  - Full Master mode
  - Slave mode (with general address call)

The I^2C interface supports the following modes in hardware:

- Master mode
- Multi-Master mode
- Slave mode

9.2 Control Registers

The MSSP module has three associated registers. These include a status register (SSPSTAT) and two control registers (SSPCON and SSPCON2). The use of these registers and their individual configuration bits differ significantly, depending on whether the MSSP module is operated in SPI or I^2C mode.

Additional details are provided under the individual sections.

9.3 SPI Mode

The SPI mode allows 8 bits of data to be synchronously transmitted and received simultaneously. All four modes of SPI are supported. To accomplish communication, typically three pins are used:

- Serial Data Out (SDO) – RC5/SDO
- Serial Data In (SDI) – RC4/SDI/SDA
- Serial Clock (SCK) – RC3/SCK/SCL

Additionally, a fourth pin may be used when in a Slave mode of operation:

- Slave Select ($\overline{SS}$) – RA5/AN4/$\overline{SS}$/C2OUT

Figure 9-1 shows the block diagram of the MSSP module when operating in SPI mode.

FIGURE 9-1: MSSP BLOCK DIAGRAM (SPI MODE)

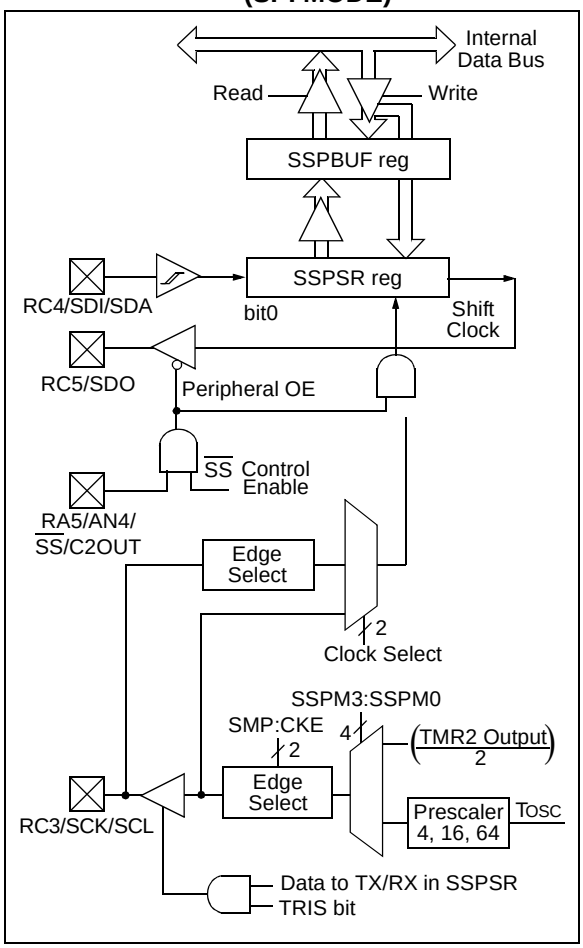

Note: When the SPI is in Slave mode with $\overline{SS}$ pin control enabled (SSPCON<3:0> = `0100`), the state of the $\overline{SS}$ pin can affect the state read back from the TRISC<5> bit. The Peripheral OE signal from the SSP module in PORTC controls the state that is read back from the TRISC<5> bit (see **Section 4.3 "PORTC and the TRISC Register"** for information on PORTC). If Read-Modify-Write instructions, such as `BSF`, are performed on the TRISC register while the $\overline{SS}$ pin is high, this will cause the TRISC<5> bit to be set, thus disabling the SDO output.

9.3.1 REGISTERS

The MSSP module has four registers for SPI mode operation. These are:

- MSSP Control Register (SSPCON)
- MSSP Status Register (SSPSTAT)
- Serial Receive/Transmit Buffer Register (SSPBUF)
- MSSP Shift Register (SSPSR) – Not directly accessible

SSPCON and SSPSTAT are the control and status registers in SPI mode operation. The SSPCON register is readable and writable. The lower six bits of the SSPSTAT are read-only. The upper two bits of the SSPSTAT are read/write.

SSPSR is the shift register used for shifting data in or out. SSPBUF is the buffer register to which data bytes are written to or read from.

In receive operations, SSPSR and SSPBUF together create a double-buffered receiver. When SSPSR receives a complete byte, it is transferred to SSPBUF and the SSPIF interrupt is set.

During transmission, the SSPBUF is not double-buffered. A write to SSPBUF will write to both SSPBUF and SSPSR.

REGISTER 9-1: SSPSTAT: MSSP STATUS REGISTER (SPI MODE) (ADDRESS 94h)

R/W-0	R/W-0	R-0	R-0	R-0	R-0	R-0	R-0
SMP	CKE	D/$\overline{A}$	P	S	R/$\overline{W}$	UA	BF
bit 7							bit 0

bit 7 **SMP:** Sample bit
SPI Master mode:
1 = Input data sampled at end of data output time
0 = Input data sampled at middle of data output time
SPI Slave mode:
SMP must be cleared when SPI is used in Slave mode.

bit 6 **CKE:** SPI Clock Select bit
1 = Transmit occurs on transition from active to Idle clock state
0 = Transmit occurs on transition from Idle to active clock state

Note: Polarity of clock state is set by the CKP bit (SSPCON1<4>).

bit 5 **D/$\overline{A}$:** Data/$\overline{\text{Address}}$ bit
Used in I^2C mode only.

bit 4 **P:** Stop bit
Used in I^2C mode only. This bit is cleared when the MSSP module is disabled, SSPEN is cleared.

bit 3 **S:** Start bit
Used in I^2C mode only.

bit 2 **R/$\overline{W}$:** Read/$\overline{\text{Write}}$ bit information
Used in I^2C mode only.

bit 1 **UA:** Update Address bit
Used in I^2C mode only.

bit 0 **BF:** Buffer Full Status bit (Receive mode only)
1 = Receive complete, SSPBUF is full
0 = Receive not complete, SSPBUF is empty

Legend:			
R = Readable bit	W = Writable bit	U = Unimplemented bit, read as ‘0’	
- n = Value at POR	‘1’ = Bit is set	‘0’ = Bit is cleared	x = Bit is unknown

© 2001-2013 Microchip Technology Inc.

REGISTER 9-2: SSPCON1: MSSP CONTROL REGISTER 1 (SPI MODE) (ADDRESS 14h)

R/W-0	R/W-0	R/W-0	R/W-0	R/W-0	R/W-0	R/W-0	R/W-0
WCOL	SSPOV	SSPEN	CKP	SSPM3	SSPM2	SSPM1	SSPM0
bit 7							bit 0

bit 7 **WCOL:** Write Collision Detect bit (Transmit mode only)

1 = The SSPBUF register is written while it is still transmitting the previous word. (Must be cleared in software.)

0 = No collision

bit 6 **SSPOV:** Receive Overflow Indicator bit

SPI Slave mode:

1 = A new byte is received while the SSPBUF register is still holding the previous data. In case of overflow, the data in SSPSR is lost. Overflow can only occur in Slave mode. The user must read the SSPBUF, even if only transmitting data, to avoid setting overflow. (Must be cleared in software.)

0 = No overflow

Note: In Master mode, the overflow bit is not set, since each new reception (and transmission) is initiated by writing to the SSPBUF register.

bit 5 **SSPEN:** Synchronous Serial Port Enable bit

1 = Enables serial port and configures SCK, SDO, SDI, and $\overline{SS}$ as serial port pins

0 = Disables serial port and configures these pins as I/O port pins

Note: When enabled, these pins must be properly configured as input or output.

bit 4 **CKP:** Clock Polarity Select bit

1 = Idle state for clock is a high level

0 = Idle state for clock is a low level

bit 3-0 **SSPM3:SSPM0:** Synchronous Serial Port Mode Select bits

0101 = SPI Slave mode, clock = SCK pin. $\overline{SS}$ pin control disabled. $\overline{SS}$ can be used as I/O pin.

0100 = SPI Slave mode, clock = SCK pin. $\overline{SS}$ pin control enabled.

0011 = SPI Master mode, clock = TMR2 output/2

0010 = SPI Master mode, clock = FOSC/64

0001 = SPI Master mode, clock = FOSC/16

0000 = SPI Master mode, clock = FOSC/4

Note: Bit combinations not specifically listed here are either reserved or implemented in I^2C mode only.

Legend:			
R = Readable bit	W = Writable bit	U = Unimplemented bit, read as ‘0’	
- n = Value at POR	‘1’ = Bit is set	‘0’ = Bit is cleared	x = Bit is unknown

9.3.2 OPERATION

When initializing the SPI, several options need to be specified. This is done by programming the appropriate control bits (SSPCON<5:0> and SSPSTAT<7:6>). These control bits allow the following to be specified:

- Master mode (SCK is the clock output)
- Slave mode (SCK is the clock input)
- Clock Polarity (Idle state of SCK)
- Data Input Sample Phase (middle or end of data output time)
- Clock Edge (output data on rising/falling edge of SCK)
- Clock Rate (Master mode only)
- Slave Select mode (Slave mode only)

The MSSP consists of a transmit/receive shift register (SSPSR) and a buffer register (SSPBUF). The SSPSR shifts the data in and out of the device, MSb first. The SSPBUF holds the data that was written to the SSPSR until the received data is ready. Once the eight bits of data have been received, that byte is moved to the SSPBUF register. Then, the Buffer Full detect bit, BF (SSPSTAT<0>), and the interrupt flag bit, SSPIF, are set. This double-buffering of the received data (SSPBUF) allows the next byte to start reception before reading the data that was just received. Any write to the SSPBUF register during transmission/reception of data will be ignored and the write collision detect bit, WCOL (SSPCON<7>), will be set. User software must clear the WCOL bit so that it can be determined if the following write(s) to the SSPBUF register completed successfully.

When the application software is expecting to receive valid data, the SSPBUF should be read before the next byte of data to transfer is written to the SSPBUF. Buffer Full bit, BF (SSPSTAT<0>), indicates when SSPBUF has been loaded with the received data (transmission is complete). When the SSPBUF is read, the BF bit is cleared. This data may be irrelevant if the SPI is only a transmitter. Generally, the MSSP interrupt is used to determine when the transmission/reception has completed. The SSPBUF must be read and/or written. If the interrupt method is not going to be used, then software polling can be done to ensure that a write collision does not occur. Example 9-1 shows the loading of the SSPBUF (SSPSR) for data transmission.

The SSPSR is not directly readable or writable and can only be accessed by addressing the SSPBUF register. Additionally, the MSSP Status register (SSPSTAT) indicates the various status conditions.

EXAMPLE 9-1: LOADING THE SSPBUF (SSPSR) REGISTER

```
LOOP  BTFSS  SSPSTAT, BF    ;Has data been received(transmit complete)?
      BRA    LOOP           ;No
      MOVF   SSPBUF, W      ;WREG reg = contents of SSPBUF
      MOVWF  RXDATA         ;Save in user RAM, if data is meaningful
      MOVF   TXDATA, W      ;W reg = contents of TXDATA
      MOVWF  SSPBUF         ;New data to xmit
```


© 2001-2013 Microchip Technology Inc.

9.3.3 ENABLING SPI I/O

To enable the serial port, SSP Enable bit, SSPEN (SSPCON<5>), must be set. To reset or reconfigure SPI mode, clear the SSPEN bit, re-initialize the SSPCON registers and then set the SSPEN bit. This configures the SDI, SDO, SCK and $\overline{SS}$ pins as serial port pins. For the pins to behave as the serial port function, some must have their data direction bits (in the TRIS register) appropriately programmed. That is:

- SDI is automatically controlled by the SPI module
- SDO must have TRISC<5> bit cleared
- SCK (Master mode) must have TRISC<3> bit cleared
- SCK (Slave mode) must have TRISC<3> bit set
- $\overline{SS}$ must have TRISC<4> bit set

Any serial port function that is not desired may be overridden by programming the corresponding data direction (TRIS) register to the opposite value.

9.3.4 TYPICAL CONNECTION

Figure 9-2 shows a typical connection between two microcontrollers. The master controller (Processor 1) initiates the data transfer by sending the SCK signal. Data is shifted out of both shift registers on their programmed clock edge and latched on the opposite edge of the clock. Both processors should be programmed to the same Clock Polarity (CKP), then both controllers would send and receive data at the same time. Whether the data is meaningful (or dummy data) depends on the application software. This leads to three scenarios for data transmission:

- Master sends data – Slave sends dummy data
- Master sends data – Slave sends data
- Master sends dummy data – Slave sends data

FIGURE 9-2: SPI MASTER/SLAVE CONNECTION

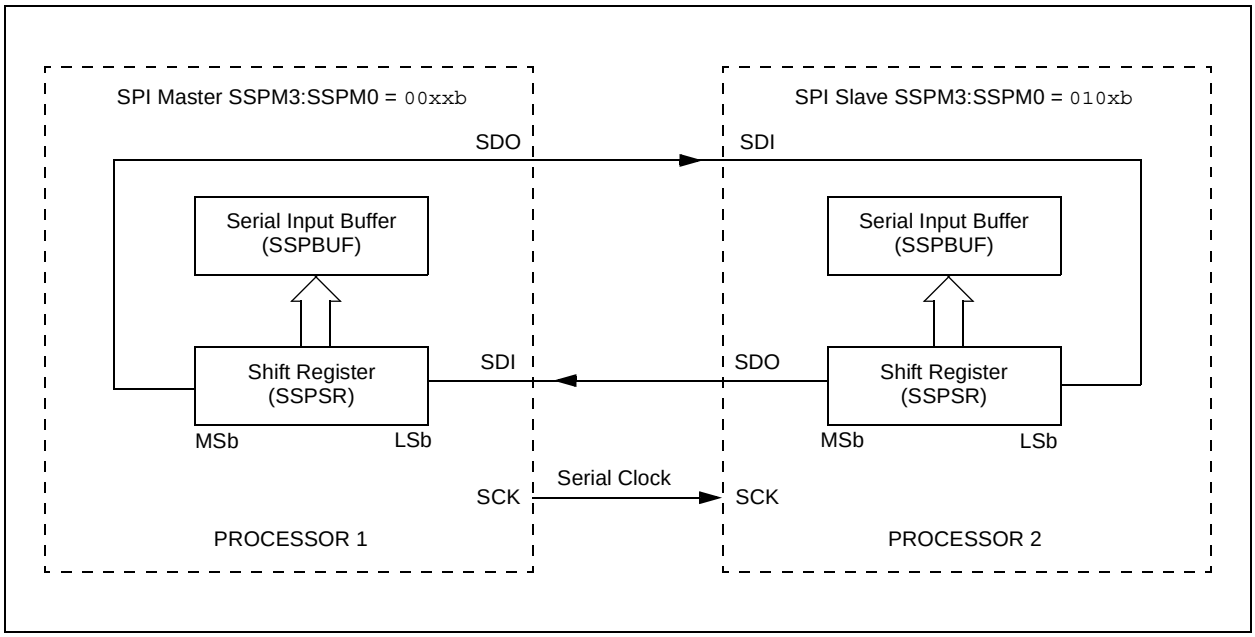

9.3.5 MASTER MODE

The master can initiate the data transfer at any time because it controls the SCK. The master determines when the slave (Processor 2, Figure 9-2) is to broadcast data by the software protocol.

In Master mode, the data is transmitted/received as soon as the SSPBUF register is written to. If the SPI is only going to receive, the SDO output could be disabled (programmed as an input). The SSPSR register will continue to shift in the signal present on the SDI pin at the programmed clock rate. As each byte is received, it will be loaded into the SSPBUF register as if a normal received byte (interrupts and status bits appropriately set). This could be useful in receiver applications as a “Line Activity Monitor” mode.

The clock polarity is selected by appropriately programming the CKP bit (SSPCON<4>). This then, would give waveforms for SPI communication as shown in Figure 9-3, Figure 9-5 and Figure 9-6, where the MSB is transmitted first. In Master mode, the SPI clock rate (bit rate) is user programmable to be one of the following:

- FOSC/4 (or TCY)
- FOSC/16 (or 4 • TCY)
- FOSC/64 (or 16 • TCY)
- Timer2 output/2

This allows a maximum data rate (at 40 MHz) of 10.00 Mbps.

Figure 9-3 shows the waveforms for Master mode. When the CKE bit is set, the SDO data is valid before there is a clock edge on SCK. The change of the input sample is shown based on the state of the SMP bit. The time when the SSPBUF is loaded with the received data is shown.

FIGURE 9-3: SPI MODE WAVEFORM (MASTER MODE)

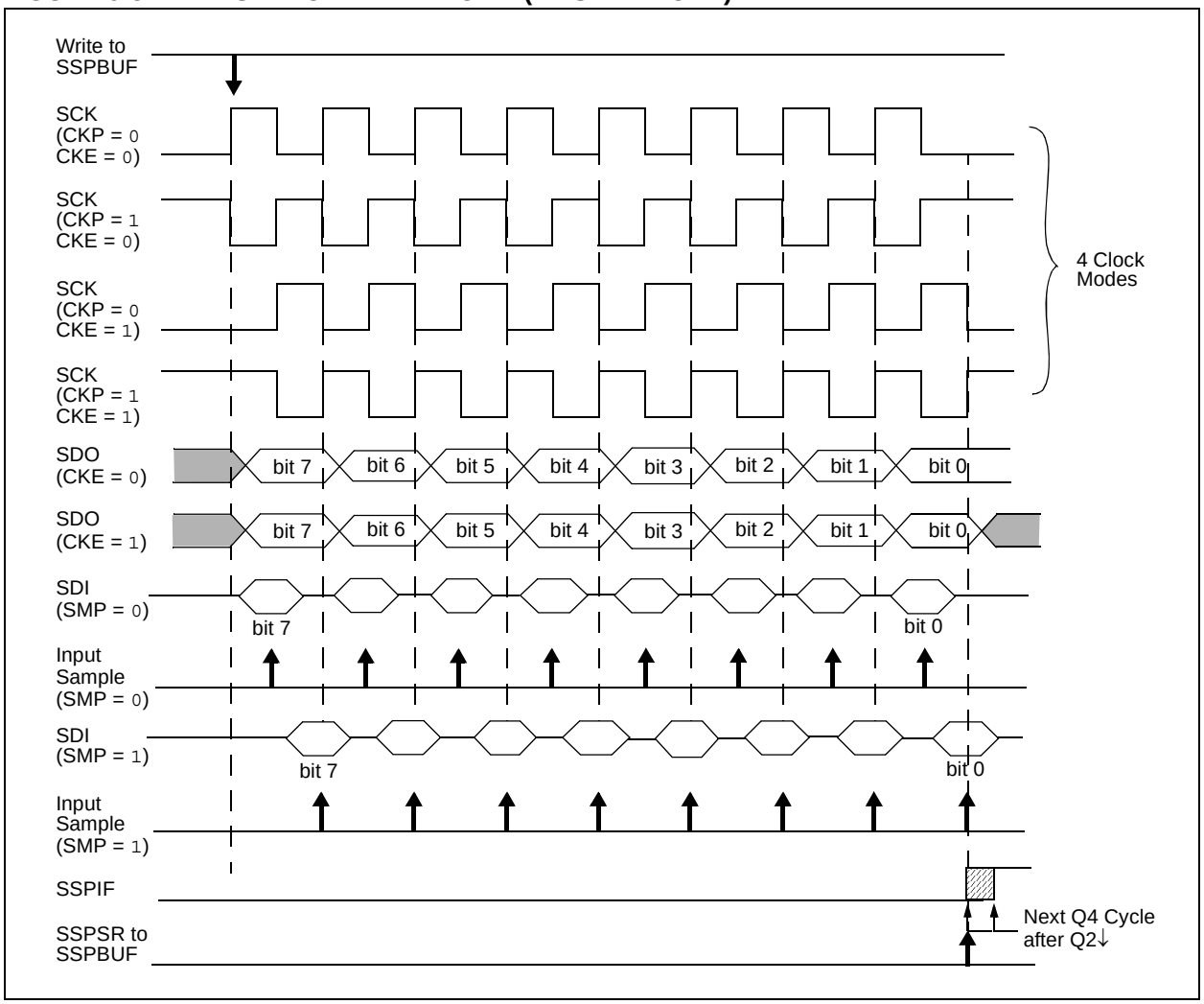

© 2001-2013 Microchip Technology Inc.

9.3.6 SLAVE MODE

In Slave mode, the data is transmitted and received as the external clock pulses appear on SCK. When the last bit is latched, the SSPIF interrupt flag bit is set.

While in Slave mode, the external clock is supplied by the external clock source on the SCK pin. This external clock must meet the minimum high and low times as specified in the electrical specifications.

While in Sleep mode, the slave can transmit/receive data. When a byte is received, the device will wake-up from Sleep.

9.3.7 SLAVE SELECT SYNCHRONIZATION

The $\overline{SS}$ pin allows a Synchronous Slave mode. The SPI must be in Slave mode with $\overline{SS}$ pin control enabled (SSPCON<3:0> = 04h). The pin must not be driven low for the $\overline{SS}$ pin to function as an input. The data latch must be high. When the $\overline{SS}$ pin is low, transmission and reception are enabled and the SDO pin is driven. When the $\overline{SS}$ pin goes high, the SDO pin is no longer driven even if in the middle of a transmitted byte and becomes a floating output. External pull-up/pull-down resistors may be desirable, depending on the application.

> **Note 1:** When the SPI is in Slave mode with $\overline{SS}$ pin control enabled (SSPCON<3:0> = `0100`), the SPI module will reset if the $\overline{SS}$ pin is set to VDD.
>
> **2:** If the SPI is used in Slave Mode with CKE set, then the $\overline{SS}$ pin control must be enabled.

When the SPI module resets, the bit counter is forced to '`0`'. This can be done by either forcing the $\overline{SS}$ pin to a high level or clearing the SSPEN bit.

To emulate two-wire communication, the SDO pin can be connected to the SDI pin. When the SPI needs to operate as a receiver, the SDO pin can be configured as an input. This disables transmissions from the SDO. The SDI can always be left as an input (SDI function) since it cannot create a bus conflict.

FIGURE 9-4: SLAVE SYNCHRONIZATION WAVEFORM

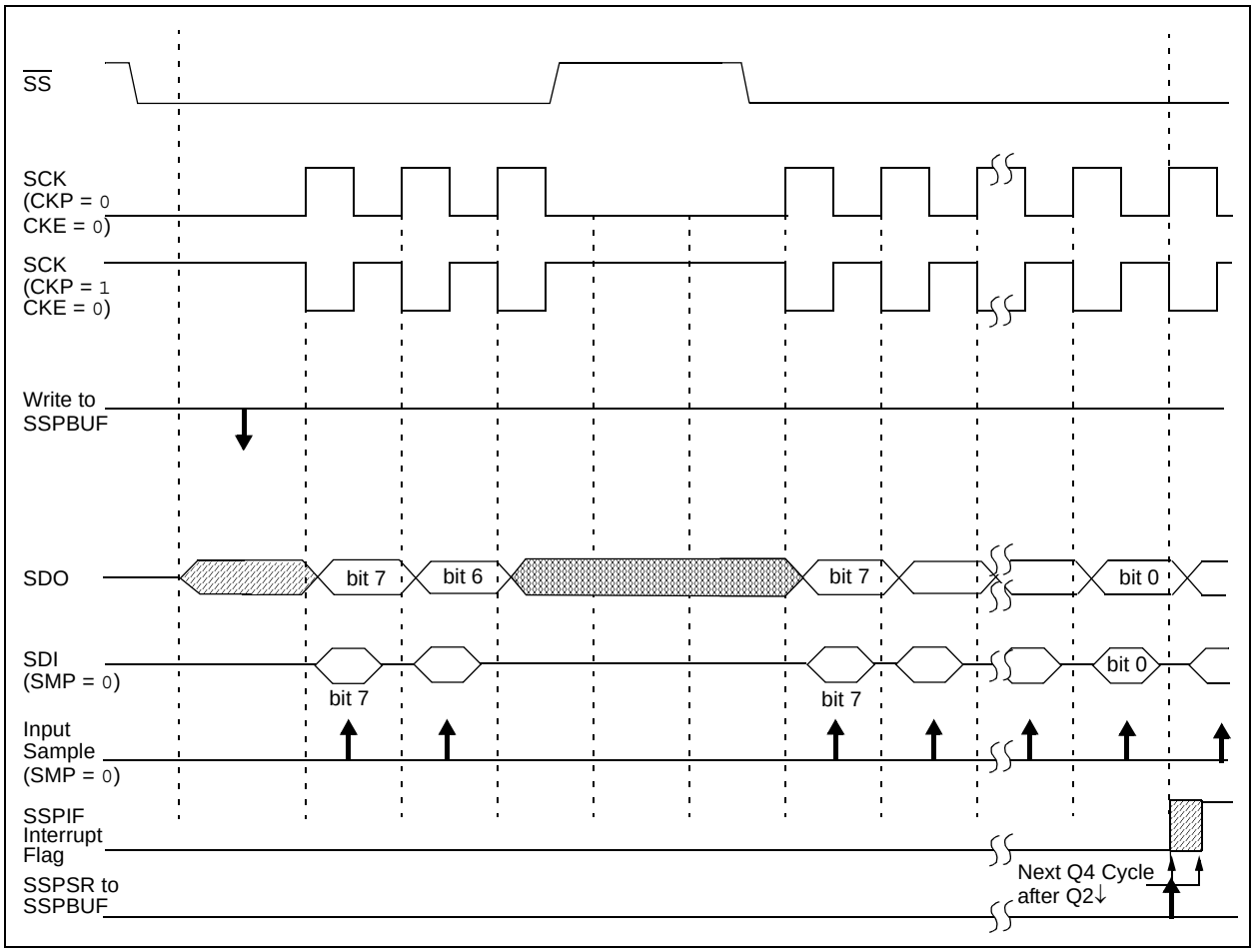

FIGURE 9-5: SPI MODE WAVEFORM (SLAVE MODE WITH CKE = 0)

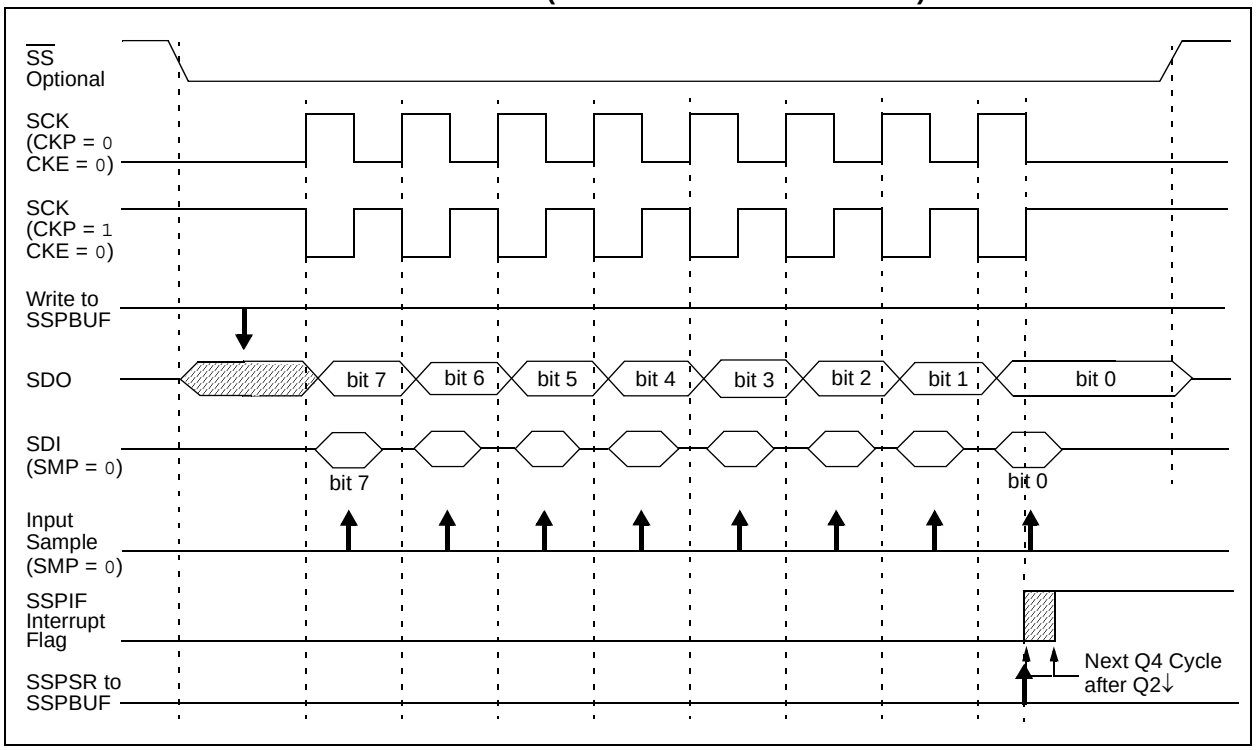

FIGURE 9-6: SPI MODE WAVEFORM (SLAVE MODE WITH CKE = 1)

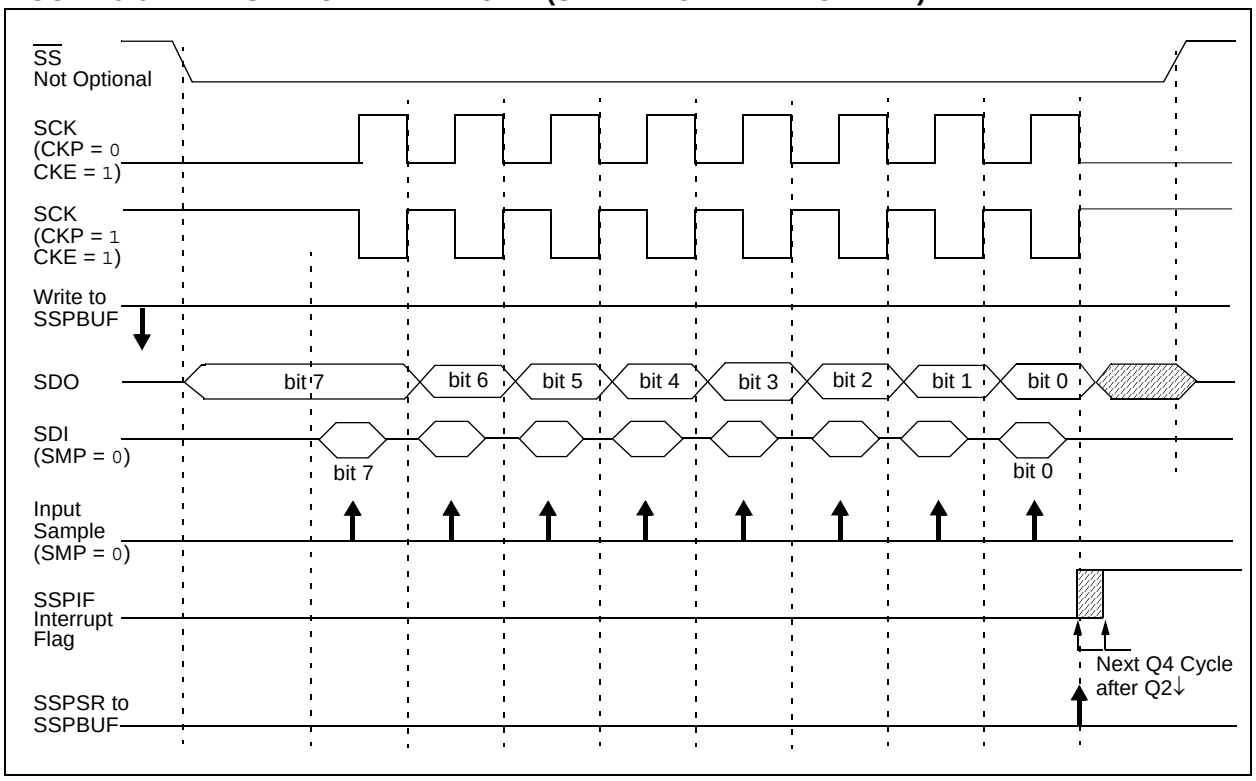

© 2001-2013 Microchip Technology Inc.

9.3.8 SLEEP OPERATION

In Master mode, all module clocks are halted and the transmission/reception will remain in that state until the device wakes from Sleep. After the device returns to normal mode, the module will continue to transmit/receive data.

In Slave mode, the SPI Transmit/Receive Shift register operates asynchronously to the device. This allows the device to be placed in Sleep mode and data to be shifted into the SPI Transmit/Receive Shift register. When all 8 bits have been received, the MSSP interrupt flag bit will be set and if enabled, will wake the device from Sleep.

9.3.9 EFFECTS OF A RESET

A Reset disables the MSSP module and terminates the current transfer.

9.3.10 BUS MODE COMPATIBILITY

Table 9-1 shows the compatibility between the standard SPI modes and the states of the CKP and CKE control bits.

TABLE 9-1: SPI BUS MODES

Standard SPI Mode Terminology	Control Bits State	
	CKP	CKE
0, 0	0	1
0, 1	0	0
1, 0	1	1
1, 1	1	0

There is also a SMP bit which controls when the data is sampled.

TABLE 9-2: REGISTERS ASSOCIATED WITH SPI OPERATION

Name	Bit 7	Bit 6	Bit 5	Bit 4	Bit 3	Bit 2	Bit 1	Bit 0	Value on POR, BOR	Value on all other Resets
INTCON	GIE/GIEH	PEIE/GIEL	TMR0IE	INT0IE	RBIE	TMR0IF	INT0IF	RBIF	0000 000x	0000 000u
PIR1	PSPIF(1)	ADIF	RCIF	TXIF	SSPIF	CCP1IF	TMR2IF	TMR1IF	0000 0000	0000 0000
PIE1	PSPIE(1)	ADIE	RCIE	TXIE	SSPIE	CCP1IE	TMR2IE	TMR1IE	0000 0000	0000 0000
TRISC	PORTC Data Direction Register								1111 1111	1111 1111
SSPBUF	Synchronous Serial Port Receive Buffer/Transmit Register								xxxx xxxx	uuuu uuuu
SSPCON	WCOL	SSPOV	SSPEN	CKP	SSPM3	SSPM2	SSPM1	SSPM0	0000 0000	0000 0000
TRISA	—	PORTA Data Direction Register							--11 1111	--11 1111
SSPSTAT	SMP	CKE	D/$\overline{A}$	P	S	R/$\overline{W}$	UA	BF	0000 0000	0000 0000

Legend: x = unknown, u = unchanged, - = unimplemented, read as '0'.
Shaded cells are not used by the MSSP in SPI mode.

Note 1: The PSPIF, PSPIE and PSPIP bits are reserved on 28-pin devices; always maintain these bits clear.

9.4 I²C Mode

The MSSP module in I²C mode fully implements all master and slave functions (including general call support) and provides interrupts on Start and Stop bits in hardware to determine a free bus (multi-master function). The MSSP module implements the standard mode specifications, as well as 7-bit and 10-bit addressing.

Two pins are used for data transfer:

- Serial clock (SCL) – RC3/SCK/SCL
- Serial data (SDA) – RC4/SDI/SDA

The user must configure these pins as inputs or outputs through the TRISC<4:3> bits.

FIGURE 9-7: MSSP BLOCK DIAGRAM (I²C MODE)

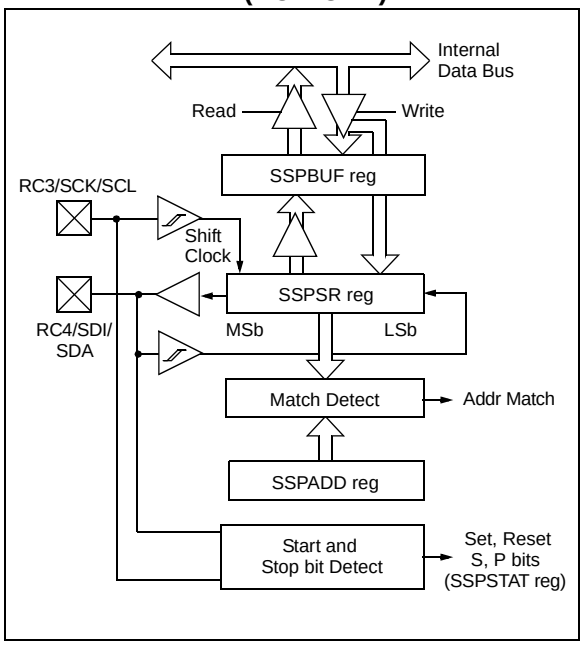

9.4.1 REGISTERS

The MSSP module has six registers for I²C operation. These are:

- MSSP Control Register (SSPCON)
- MSSP Control Register 2 (SSPCON2)
- MSSP Status Register (SSPSTAT)
- Serial Receive/Transmit Buffer Register (SSPBUF)
- MSSP Shift Register (SSPSR) – Not directly accessible
- MSSP Address Register (SSPADD)

SSPCON, SSPCON2 and SSPSTAT are the control and status registers in I²C mode operation. The SSPCON and SSPCON2 registers are readable and writable. The lower six bits of the SSPSTAT are read-only. The upper two bits of the SSPSTAT are read/write.

SSPSR is the shift register used for shifting data in or out. SSPBUF is the buffer register to which data bytes are written to or read from.

SSPADD register holds the slave device address when the SSP is configured in I²C Slave mode. When the SSP is configured in Master mode, the lower seven bits of SSPADD act as the baud rate generator reload value.

In receive operations, SSPSR and SSPBUF together create a double-buffered receiver. When SSPSR receives a complete byte, it is transferred to SSPBUF and the SSPIF interrupt is set.

During transmission, the SSPBUF is not double-buffered. A write to SSPBUF will write to both SSPBUF and SSPSR.

© 2001-2013 Microchip Technology Inc.

REGISTER 9-3: SSPSTAT: MSSP STATUS REGISTER (I^2C MODE) (ADDRESS 94h)

R/W-0	R/W-0	R-0	R-0	R-0	R-0	R-0	R-0
SMP	CKE	D/$\overline{A}$	P	S	R/$\overline{W}$	UA	BF
bit 7							bit 0

bit 7 **SMP:** Slew Rate Control bit

In Master or Slave mode:
1 = Slew rate control disabled for standard speed mode (100 kHz and 1 MHz)
0 = Slew rate control enabled for high-speed mode (400 kHz)

bit 6 **CKE:** SMBus Select bit

In Master or Slave mode:
1 = Enable SMBus specific inputs
0 = Disable SMBus specific inputs

bit 5 **D/$\overline{A}$:** Data/$\overline{Address}$ bit

In Master mode:
Reserved.

In Slave mode:
1 = Indicates that the last byte received or transmitted was data
0 = Indicates that the last byte received or transmitted was address

bit 4 **P:** Stop bit

1 = Indicates that a Stop bit has been detected last
0 = Stop bit was not detected last

Note: This bit is cleared on Reset and when SSPEN is cleared.

bit 3 **S:** Start bit

1 = Indicates that a Start bit has been detected last
0 = Start bit was not detected last

Note: This bit is cleared on Reset and when SSPEN is cleared.

bit 2 **R/$\overline{W}$:** Read/$\overline{Write}$ bit information (I^2C mode only)

In Slave mode:
1 = Read
0 = Write

Note: This bit holds the R/$\overline{W}$ bit information following the last address match. This bit is only valid from the address match to the next Start bit, Stop bit or not $\overline{ACK}$ bit.

In Master mode:
1 = Transmit is in progress
0 = Transmit is not in progress

Note: ORing this bit with SEN, RSEN, PEN, RCEN or ACKEN will indicate if the MSSP is in Idle mode.

bit 1 **UA:** Update Address (10-bit Slave mode only)

1 = Indicates that the user needs to update the address in the SSPADD register
0 = Address does not need to be updated

bit 0 **BF:** Buffer Full Status bit

In Transmit mode:
1 = Receive complete, SSPBUF is full
0 = Receive not complete, SSPBUF is empty

In Receive mode:
1 = Data Transmit in progress (does not include the $\overline{ACK}$ and Stop bits), SSPBUF is full
0 = Data Transmit complete (does not include the $\overline{ACK}$ and Stop bits), SSPBUF is empty

Legend:			
R = Readable bit	W = Writable bit	U = Unimplemented bit, read as ‘0’	
- n = Value at POR	‘1’ = Bit is set	‘0’ = Bit is cleared	x = Bit is unknown

REGISTER 9-4: SSPCON1: MSSP CONTROL REGISTER 1 (I^2C MODE) (ADDRESS 14h)

R/W-0	R/W-0	R/W-0	R/W-0	R/W-0	R/W-0	R/W-0	R/W-0
WCOL	SSPOV	SSPEN	CKP	SSPM3	SSPM2	SSPM1	SSPM0
bit 7							bit 0

bit 7 **WCOL:** Write Collision Detect bit

In Master Transmit mode:

1 = A write to the SSPBUF register was attempted while the I^2C conditions were not valid for a transmission to be started. (Must be cleared in software.)

0 = No collision

In Slave Transmit mode:

1 = The SSPBUF register is written while it is still transmitting the previous word. (Must be cleared in software.)

0 = No collision

In Receive mode (Master or Slave modes):

This is a “don’t care” bit.

bit 6 **SSPOV:** Receive Overflow Indicator bit

In Receive mode:

1 = A byte is received while the SSPBUF register is still holding the previous byte. (Must be cleared in software.)

0 = No overflow

In Transmit mode:

This is a “don’t care” bit in Transmit mode.

bit 5 **SSPEN:** Synchronous Serial Port Enable bit

1 = Enables the serial port and configures the SDA and SCL pins as the serial port pins

0 = Disables the serial port and configures these pins as I/O port pins

Note: When enabled, the SDA and SCL pins must be properly configured as input or output.

bit 4 **CKP:** SCK Release Control bit

In Slave mode:

1 = Release clock

0 = Holds clock low (clock stretch). (Used to ensure data setup time.)

In Master mode:

Unused in this mode.

bit 3-0 **SSPM3:SSPM0:** Synchronous Serial Port Mode Select bits

1111 = I^2C Slave mode, 10-bit address with Start and Stop bit interrupts enabled

1110 = I^2C Slave mode, 7-bit address with Start and Stop bit interrupts enabled

1011 = I^2C Firmware Controlled Master mode (Slave Idle)

1000 = I^2C Master mode, clock = $F_{OSC}/(4 * (SSPADD + 1))$

0111 = I^2C Slave mode, 10-bit address

0110 = I^2C Slave mode, 7-bit address

Note: Bit combinations not specifically listed here are either reserved or implemented in SPI mode only.

Legend:			
R = Readable bit	W = Writable bit	U = Unimplemented bit, read as ‘0’	
- n = Value at POR	‘1’ = Bit is set	‘0’ = Bit is cleared	x = Bit is unknown

© 2001-2013 Microchip Technology Inc.

REGISTER 9-5: SSPCON2: MSSP CONTROL REGISTER 2 (I^2C MODE) (ADDRESS 91h)

R/W-0	R/W-0	R/W-0	R/W-0	R/W-0	R/W-0	R/W-0	R/W-0
GCEN	ACKSTAT	ACKDT	ACKEN	RCEN	PEN	RSEN	SEN
bit 7							bit 0

bit 7 **GCEN:** General Call Enable bit (Slave mode only)
1 = Enable interrupt when a general call address (0000h) is received in the SSPSR
0 = General call address disabled

bit 6 **ACKSTAT:** Acknowledge Status bit (Master Transmit mode only)
1 = Acknowledge was not received from slave
0 = Acknowledge was received from slave

bit 5 **ACKDT:** Acknowledge Data bit (Master Receive mode only)
1 = Not Acknowledge
0 = Acknowledge

Note: Value that will be transmitted when the user initiates an Acknowledge sequence at the end of a receive.

bit 4 **ACKEN:** Acknowledge Sequence Enable bit (Master Receive mode only)
1 = Initiate Acknowledge sequence on SDA and SCL pins and transmit ACKDT data bit. Automatically cleared by hardware.
0 = Acknowledge sequence Idle

bit 3 **RCEN:** Receive Enable bit (Master mode only)
1 = Enables Receive mode for I^2C
0 = Receive Idle

bit 2 **PEN:** Stop Condition Enable bit (Master mode only)
1 = Initiate Stop condition on SDA and SCL pins. Automatically cleared by hardware.
0 = Stop condition Idle

bit 1 **RSEN:** Repeated Start Condition Enabled bit (Master mode only)
1 = Initiate Repeated Start condition on SDA and SCL pins. Automatically cleared by hardware.
0 = Repeated Start condition Idle

bit 0 **SEN:** Start Condition Enabled/Stretch Enabled bit
In Master mode:
1 = Initiate Start condition on SDA and SCL pins. Automatically cleared by hardware.
0 = Start condition Idle
In Slave mode:
1 = Clock stretching is enabled for both slave transmit and slave receive (stretch enabled)
0 = Clock stretching is enabled for slave transmit only (PIC16F87X compatibility)

Legend:			
R = Readable bit	W = Writable bit	U = Unimplemented bit, read as ‘0’	
- n = Value at POR	‘1’ = Bit is set	‘0’ = Bit is cleared	x = Bit is unknown

Note: For bits ACKEN, RCEN, PEN, RSEN, SEN: If the I^2C module is not in the Idle mode, this bit may not be set (no spooling) and the SSPBUF may not be written (or writes to the SSPBUF are disabled).

9.4.2 OPERATION

The MSSP module functions are enabled by setting MSSP Enable bit, SSPEN (SSPCON<5>).

The SSPCON register allows control of the I^2C operation. Four mode selection bits (SSPCON<3:0>) allow one of the following I^2C modes to be selected:

- I^2C Master mode, clock = OSC/4 (SSPADD + 1)
- I^2C Slave mode (7-bit address)
- I^2C Slave mode (10-bit address)
- I^2C Slave mode (7-bit address) with Start and Stop bit interrupts enabled
- I^2C Slave mode (10-bit address) with Start and Stop bit interrupts enabled
- I^2C Firmware Controlled Master mode, slave is Idle

Selection of any I^2C mode, with the SSPEN bit set, forces the SCL and SDA pins to be open-drain, provided these pins are programmed to inputs by setting the appropriate TRISC bits. To ensure proper operation of the module, pull-up resistors must be provided externally to the SCL and SDA pins.

9.4.3 SLAVE MODE

In Slave mode, the SCL and SDA pins must be configured as inputs (TRISC<4:3> set). The MSSP module will override the input state with the output data when required (slave-transmitter).

The I^2C Slave mode hardware will always generate an interrupt on an address match. Through the mode select bits, the user can also choose to interrupt on Start and Stop bits

When an address is matched, or the data transfer after an address match is received, the hardware automatically will generate the Acknowledge ($\overline{ACK}$) pulse and load the SSPBUF register with the received value currently in the SSPSR register.

Any combination of the following conditions will cause the MSSP module not to give this $\overline{ACK}$ pulse:

- The buffer full bit, BF (SSPSTAT<0>), was set before the transfer was received.
- The overflow bit, SSPOV (SSPCON<6>), was set before the transfer was received.

In this case, the SSPSR register value is not loaded into the SSPBUF, but bit SSPIF (PIR1<3>) is set. The BF bit is cleared by reading the SSPBUF register, while bit SSPOV is cleared through software.

The SCL clock input must have a minimum high and low for proper operation. The high and low times of the I^2C specification, as well as the requirement of the MSSP module, are shown in timing parameter #100 and parameter #101.

9.4.3.1 Addressing

Once the MSSP module has been enabled, it waits for a Start condition to occur. Following the Start condition, the 8 bits are shifted into the SSPSR register. All incoming bits are sampled with the rising edge of the clock (SCL) line. The value of register SSPSR<7:1> is compared to the value of the SSPADD register. The address is compared on the falling edge of the eighth clock (SCL) pulse. If the addresses match, and the BF and SSPOV bits are clear, the following events occur:

1. The SSPSR register value is loaded into the SSPBUF register.
2. The Buffer Full bit, BF, is set.
3. An $\overline{ACK}$ pulse is generated.
4. MSSP Interrupt Flag bit, SSPIF (PIR1<3>), is set (interrupt is generated if enabled) on the falling edge of the ninth SCL pulse.

In 10-bit Address mode, two address bytes need to be received by the slave. The five Most Significant bits (MSbs) of the first address byte specify if this is a 10-bit address. Bit R/$\overline{W}$ (SSPSTAT<2>) must specify a write so the slave device will receive the second address byte. For a 10-bit address, the first byte would equal '`11110 A9 A8 0`', where '`A9`' and '`A8`' are the two MSbs of the address. The sequence of events for 10-bit address is as follows, with steps 7 through 9 for the slave-transmitter:

1. Receive first (high) byte of address (bits SSPIF, BF and bit UA (SSPSTAT<1>) are set).
2. Update the SSPADD register with second (low) byte of address (clears bit UA and releases the SCL line).
3. Read the SSPBUF register (clears bit BF) and clear flag bit SSPIF.
4. Receive second (low) byte of address (bits SSPIF, BF and UA are set).
5. Update the SSPADD register with the first (high) byte of address. If match releases SCL line, this will clear bit UA.
6. Read the SSPBUF register (clears bit BF) and clear flag bit SSPIF.
7. Receive Repeated Start condition.
8. Receive first (high) byte of address (bits SSPIF and BF are set).
9. Read the SSPBUF register (clears bit BF) and clear flag bit SSPIF.

© 2001-2013 Microchip Technology Inc.

9.4.3.2 Reception

When the R/$\overline{W}$ bit of the address byte is clear and an address match occurs, the R/$\overline{W}$ bit of the SSPSTAT register is cleared. The received address is loaded into the SSPBUF register and the SDA line is held low ($\overline{ACK}$).

When the address byte overflow condition exists, then the No Acknowledge ($\overline{ACK}$) pulse is given. An overflow condition is defined as either bit BF (SSPSTAT<0>) is set or bit SSPOV (SSPCON<6>) is set.

An MSSP interrupt is generated for each data transfer byte. Flag bit SSPIF (PIR1<3>) must be cleared in software. The SSPSTAT register is used to determine the status of the byte.

If SEN is enabled (SSPCON<0> = 1), RC3/SCK/SCL will be held low (clock stretch) following each data transfer. The clock must be released by setting bit CKP (SSPCON<4>). See **Section 9.4.4 “Clock Stretching”** for more detail.

9.4.3.3 Transmission

When the R/$\overline{W}$ bit of the incoming address byte is set and an address match occurs, the R/$\overline{W}$ bit of the SSPSTAT register is set. The received address is loaded into the SSPBUF register. The $\overline{ACK}$ pulse will be sent on the ninth bit and pin RC3/SCK/SCL is held low regardless of SEN (see **Section 9.4.4 “Clock Stretching”** for more detail). By stretching the clock, the master will be unable to assert another clock pulse until the slave is done preparing the transmit data. The transmit data must be loaded into the SSPBUF register, which also loads the SSPSR register. Then pin RC3/SCK/SCL should be enabled by setting bit CKP (SSPCON<4>). The eight data bits are shifted out on the falling edge of the SCL input. This ensures that the SDA signal is valid during the SCL high time (Figure 9-9).

The $\overline{ACK}$ pulse from the master-receiver is latched on the rising edge of the ninth SCL input pulse. If the SDA line is high (not $\overline{ACK}$), then the data transfer is complete. In this case, when the $\overline{ACK}$ is latched by the slave, the slave logic is reset (resets SSPSTAT register) and the slave monitors for another occurrence of the Start bit. If the SDA line was low ($\overline{ACK}$), the next transmit data must be loaded into the SSPBUF register. Again, pin RC3/SCK/SCL must be enabled by setting bit CKP.

An MSSP interrupt is generated for each data transfer byte. The SSPIF bit must be cleared in software and the SSPSTAT register is used to determine the status of the byte. The SSPIF bit is set on the falling edge of the ninth clock pulse.

FIGURE 9-8: I²C SLAVE MODE TIMING WITH SEN = 0 (RECEPTION, 7-BIT ADDRESS)

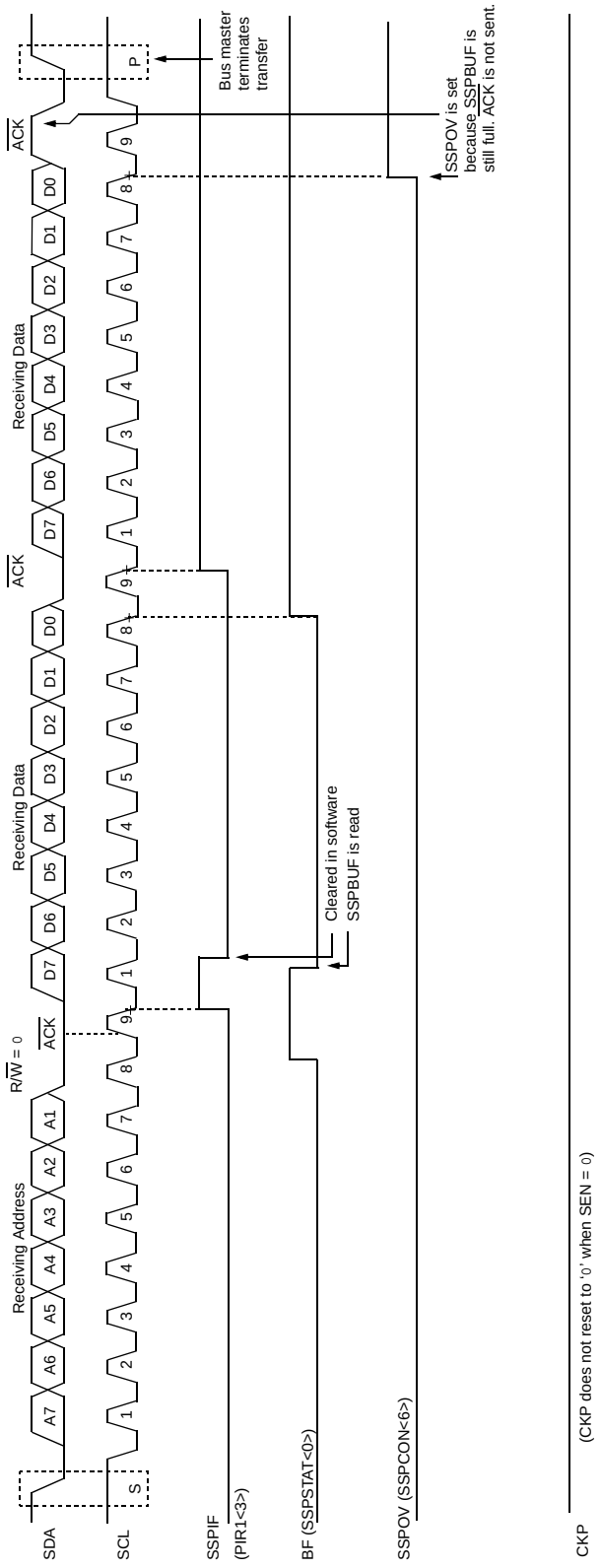

© 2001-2013 Microchip Technology Inc.

FIGURE 9-9: I²C SLAVE MODE TIMING (TRANSMISSION, 7-BIT ADDRESS)

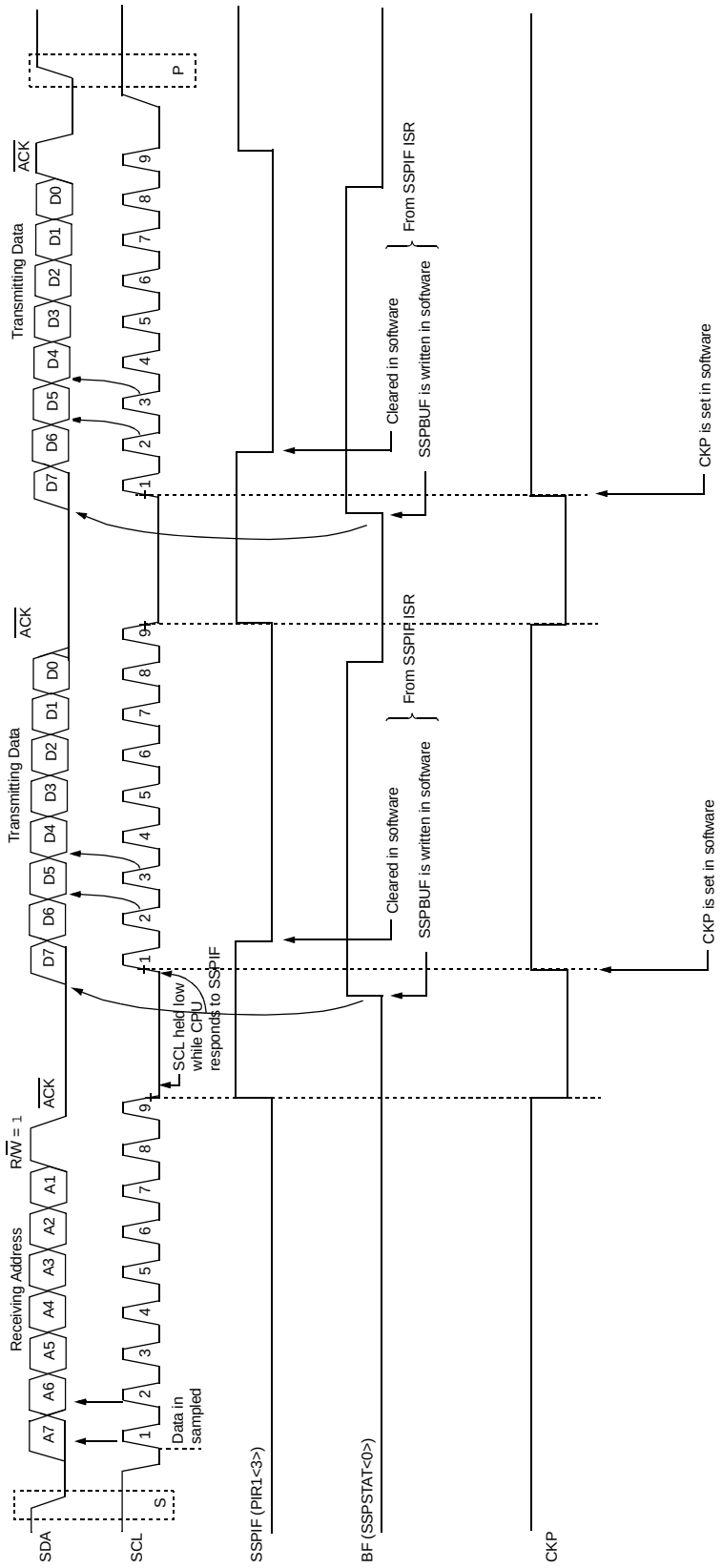

FIGURE 9-10: I²C SLAVE MODE TIMING WITH SEN = 0 (RECEPTION, 10-BIT ADDRESS)

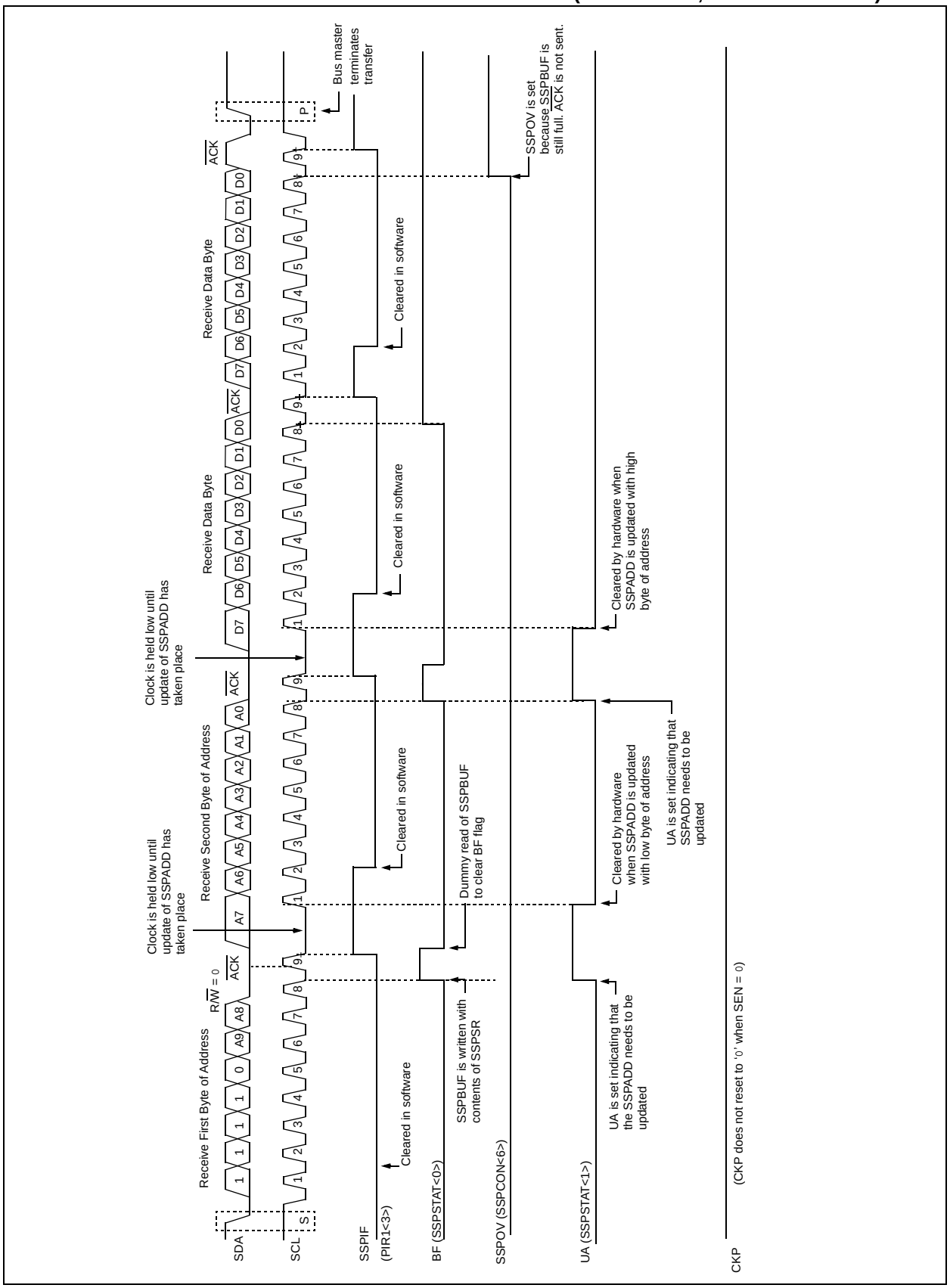

© 2001-2013 Microchip Technology Inc.

FIGURE 9-11: I²C SLAVE MODE TIMING (TRANSMISSION, 10-BIT ADDRESS)

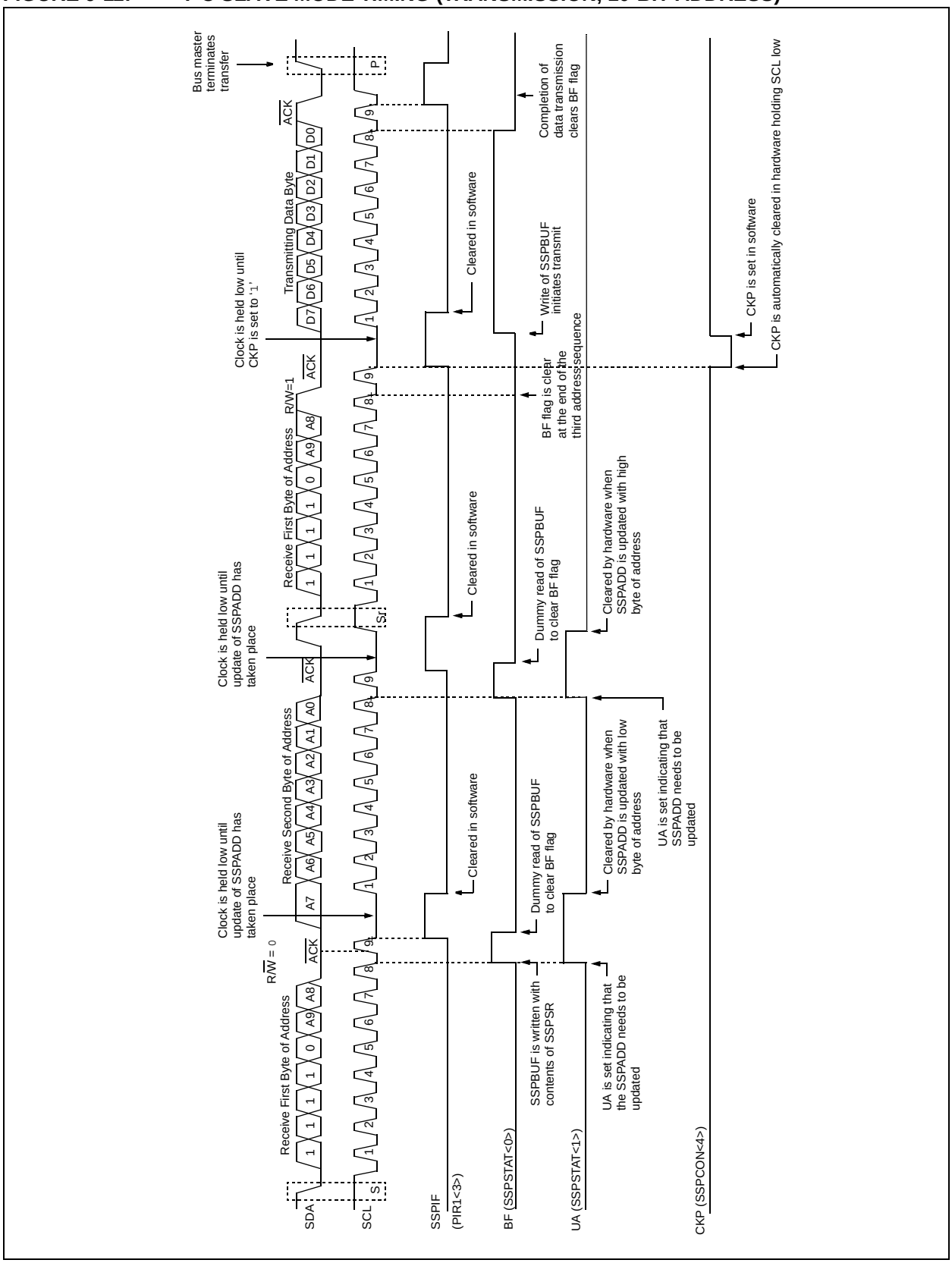

9.4.4 CLOCK STRETCHING

Both 7 and 10-bit Slave modes implement automatic clock stretching during a transmit sequence.

The SEN bit (SSPCON2<0>) allows clock stretching to be enabled during receives. Setting SEN will cause the SCL pin to be held low at the end of each data receive sequence.

9.4.4.1 Clock Stretching for 7-bit Slave Receive Mode (SEN = 1)

In 7-bit Slave Receive mode, on the falling edge of the ninth clock at the end of the $\overline{\text{ACK}}$ sequence, if the BF bit is set, the CKP bit in the SSPCON register is automatically cleared, forcing the SCL output to be held low. The CKP bit being cleared to '0' will assert the SCL line low. The CKP bit must be set in the user's ISR before reception is allowed to continue. By holding the SCL line low, the user has time to service the ISR and read the contents of the SSPBUF before the master device can initiate another receive sequence. This will prevent buffer overruns from occurring (see Figure 9-13).

Note 1:	If the user reads the contents of the SSPBUF before the falling edge of the ninth clock, thus clearing the BF bit, the CKP bit will not be cleared and clock stretching will not occur.
2:	The CKP bit can be set in software regardless of the state of the BF bit. The user should be careful to clear the BF bit in the ISR before the next receive sequence in order to prevent an overflow condition.

9.4.4.2 Clock Stretching for 10-bit Slave Receive Mode (SEN = 1)

In 10-bit Slave Receive mode, during the address sequence, clock stretching automatically takes place but CKP is not cleared. During this time, if the UA bit is set after the ninth clock, clock stretching is initiated. The UA bit is set after receiving the upper byte of the 10-bit address and following the receive of the second byte of the 10-bit address, with the R/$\overline{\text{W}}$ bit cleared to '0'. The release of the clock line occurs upon updating SSPADD. Clock stretching will occur on each data receive sequence as described in 7-bit mode.

Note:	If the user polls the UA bit and clears it by updating the SSPADD register before the falling edge of the ninth clock occurs and if the user hasn't cleared the BF bit by reading the SSPBUF register before that time, then the CKP bit will still NOT be asserted low. Clock stretching, on the basis of the state of the BF bit, only occurs during a data sequence, not an address sequence.

9.4.4.3 Clock Stretching for 7-bit Slave Transmit Mode

7-bit Slave Transmit mode implements clock stretching by clearing the CKP bit after the falling edge of the ninth clock, if the BF bit is clear. This occurs regardless of the state of the SEN bit.

The user's ISR must set the CKP bit before transmission is allowed to continue. By holding the SCL line low, the user has time to service the ISR and load the contents of the SSPBUF before the master device can initiate another transmit sequence (see Figure 9-9).

Note 1:	If the user loads the contents of SSPBUF, setting the BF bit before the falling edge of the ninth clock, the CKP bit will not be cleared and clock stretching will not occur.
2:	The CKP bit can be set in software regardless of the state of the BF bit.

9.4.4.4 Clock Stretching for 10-bit Slave Transmit Mode

In 10-bit Slave Transmit mode, clock stretching is controlled during the first two address sequences by the state of the UA bit, just as it is in 10-bit Slave Receive mode. The first two addresses are followed by a third address sequence, which contains the high order bits of the 10-bit address and the R/$\overline{\text{W}}$ bit set to '1'. After the third address sequence is performed, the UA bit is not set, the module is now configured in Transmit mode and clock stretching is controlled by the BF flag as in 7-bit Slave Transmit mode (see Figure 9-11).

© 2001-2013 Microchip Technology Inc.

9.4.4.5 Clock Synchronization and the CKP Bit

When the CKP bit is cleared, the SCL output is forced to '0'; however, setting the CKP bit will not assert the SCL output low until the SCL output is already sampled low. Therefore, the CKP bit will not assert the SCL line until an external I^2C master device has already asserted the SCL line. The SCL output will remain low until the CKP bit is set and all other devices on the I^2C bus have deasserted SCL. This ensures that a write to the CKP bit will not violate the minimum high time requirement for SCL (see Figure 9-12).

FIGURE 9-12: CLOCK SYNCHRONIZATION TIMING

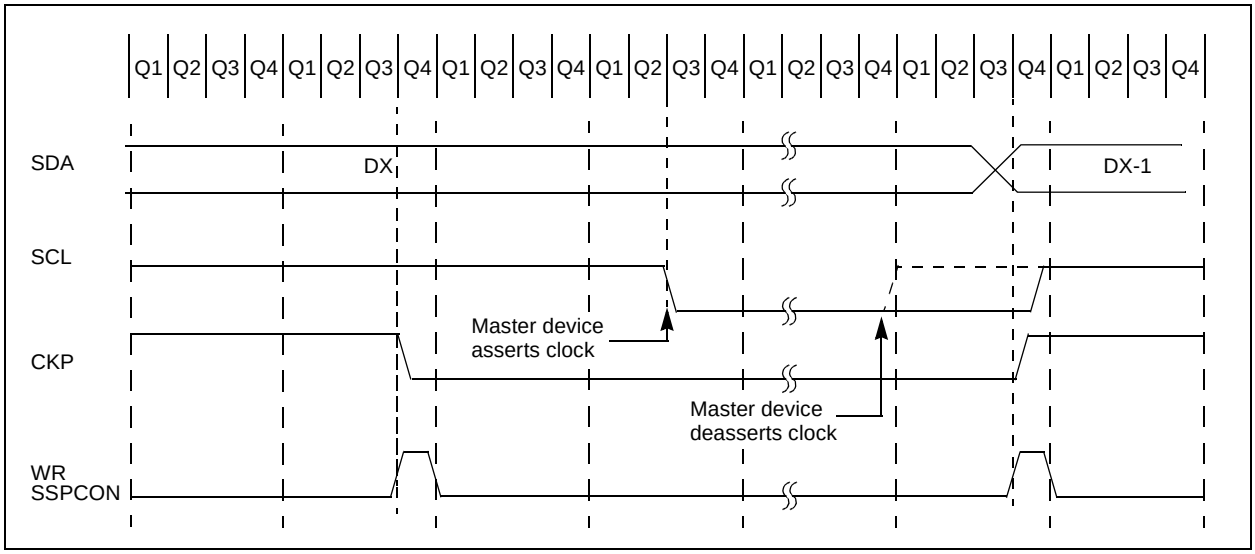

FIGURE 9-13: I²C SLAVE MODE TIMING WITH SEN = 1 (RECEPTION, 7-BIT ADDRESS)

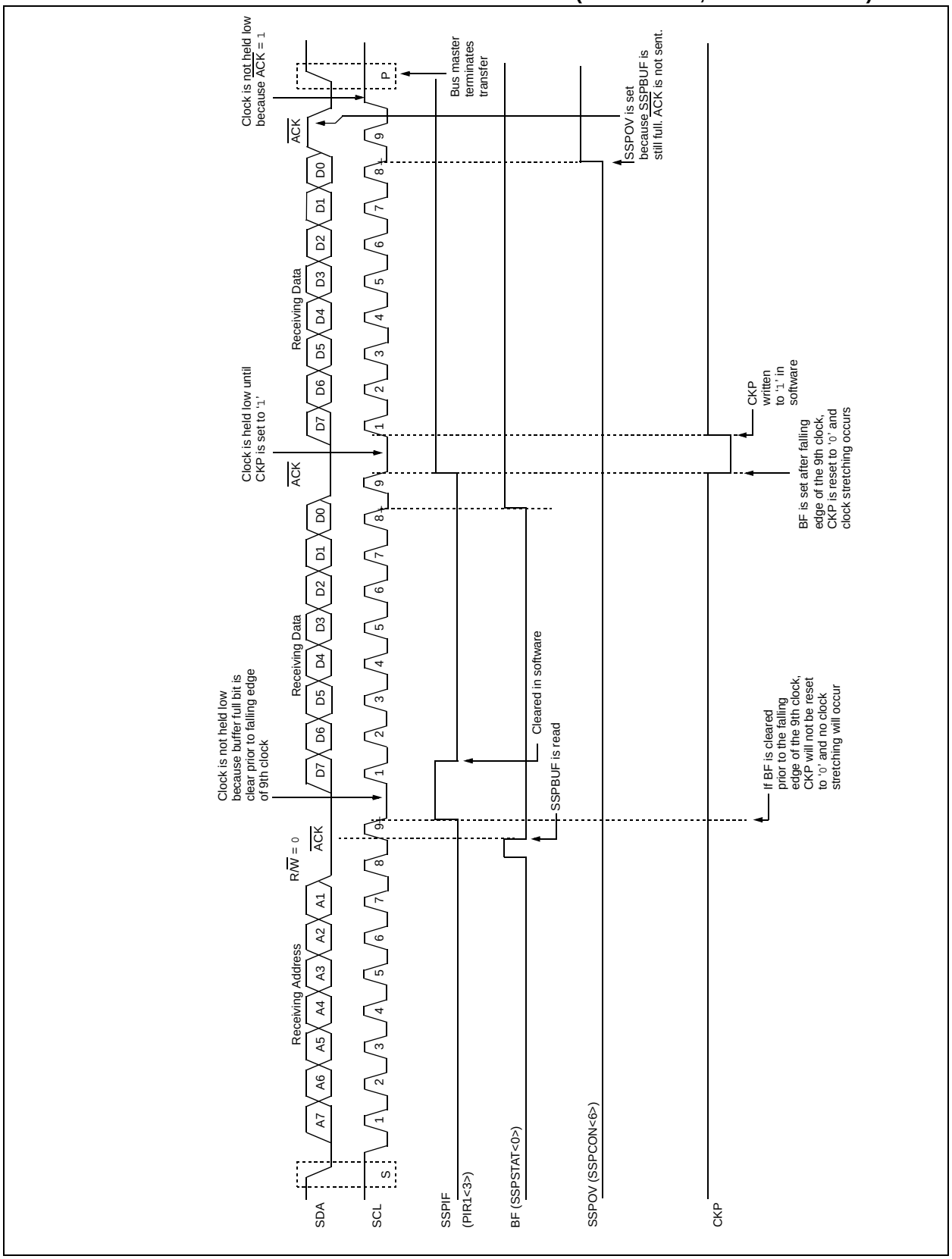

© 2001-2013 Microchip Technology Inc.

FIGURE 9-14: I²C SLAVE MODE TIMING SEN = 1 (RECEPTION, 10-BIT ADDRESS)

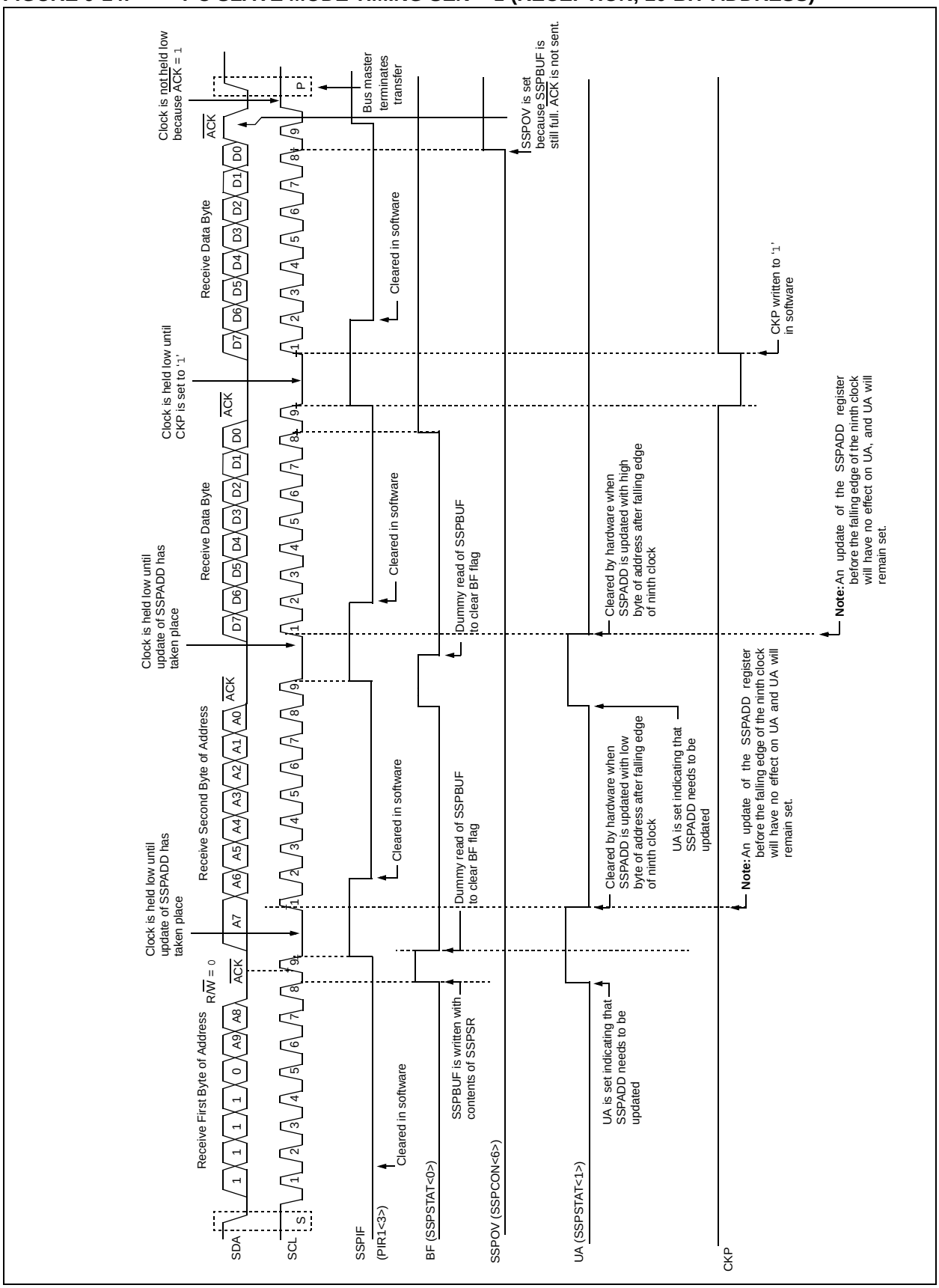

9.4.5 GENERAL CALL ADDRESS SUPPORT

The addressing procedure for the I^2C bus is such that the first byte after the Start condition usually determines which device will be the slave addressed by the master. The exception is the general call address which can address all devices. When this address is used, all devices should, in theory, respond with an Acknowledge.

The general call address is one of eight addresses reserved for specific purposes by the I^2C protocol. It consists of all '0's with R/$\overline{W}$ = 0.

The general call address is recognized when the General Call Enable bit (GCEN) is enabled (SSPCON2<7> set). Following a Start bit detect, 8 bits are shifted into the SSPSR and the address is compared against the SSPADD. It is also compared to the general call address and fixed in hardware.

If the general call address matches, the SSPSR is transferred to the SSPBUF, the BF flag bit is set (eighth bit) and on the falling edge of the ninth bit ($\overline{ACK}$ bit), the SSPIF interrupt flag bit is set.

When the interrupt is serviced, the source for the interrupt can be checked by reading the contents of the SSPBUF. The value can be used to determine if the address was device specific or a general call address.

In 10-bit mode, the SSPADD is required to be updated for the second half of the address to match and the UA bit is set (SSPSTAT<1>). If the general call address is sampled when the GCEN bit is set, while the slave is configured in 10-bit Address mode, then the second half of the address is not necessary, the UA bit will not be set and the slave will begin receiving data after the Acknowledge (Figure 9-15).

FIGURE 9-15: SLAVE MODE GENERAL CALL ADDRESS SEQUENCE (7 OR 10-BIT ADDRESS MODE)

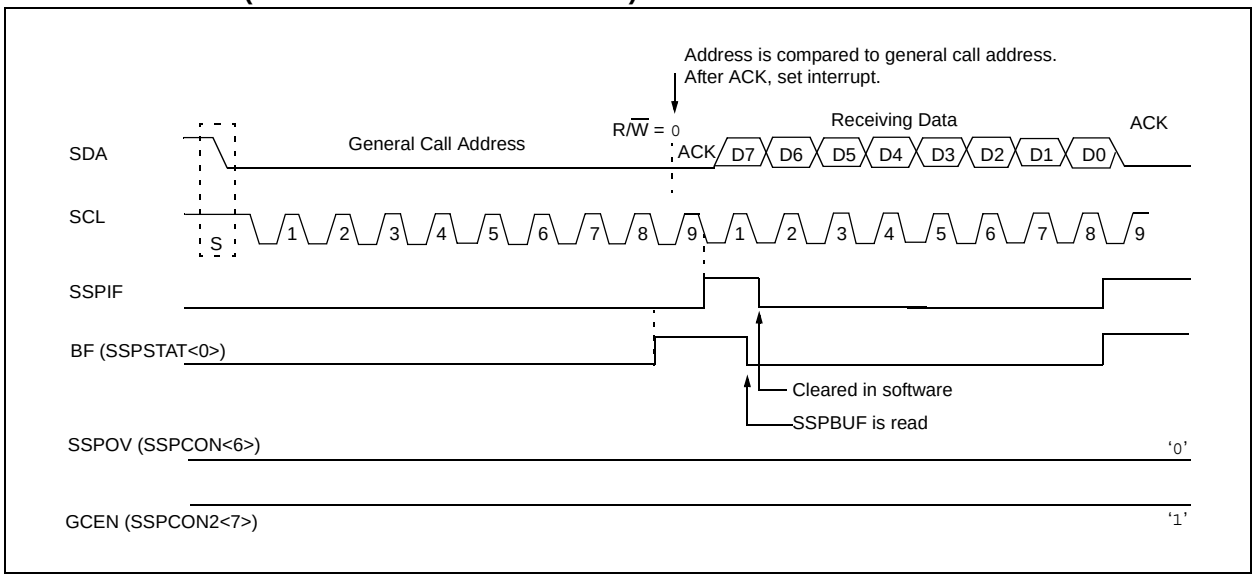

© 2001-2013 Microchip Technology Inc.

9.4.6 MASTER MODE

Master mode is enabled by setting and clearing the appropriate SSPM bits in SSPCON and by setting the SSPEN bit. In Master mode, the SCL and SDA lines are manipulated by the MSSP hardware.

Master mode of operation is supported by interrupt generation on the detection of the Start and Stop conditions. The Stop (P) and Start (S) bits are cleared from a Reset or when the MSSP module is disabled. Control of the I^2C bus may be taken when the P bit is set or the bus is Idle, with both the S and P bits clear.

In Firmware Controlled Master mode, user code conducts all I^2C bus operations based on Start and Stop bit conditions.

Once Master mode is enabled, the user has six options.

1. Assert a Start condition on SDA and SCL.
2. Assert a Repeated Start condition on SDA and SCL.
3. Write to the SSPBUF register, initiating transmission of data/address.
4. Configure the I^2C port to receive data.
5. Generate an Acknowledge condition at the end of a received byte of data.
6. Generate a Stop condition on SDA and SCL.

Note: The MSSP module, when configured in I^2C Master mode, does not allow queueing of events. For instance, the user is not allowed to initiate a Start condition and immediately write the SSPBUF register to initiate transmission before the Start condition is complete. In this case, the SSPBUF will not be written to and the WCOL bit will be set, indicating that a write to the SSPBUF did not occur.

The following events will cause SSP Interrupt Flag bit, SSPIF, to be set (SSP interrupt if enabled):

- Start condition
- Stop condition
- Data transfer byte transmitted/received
- Acknowledge transmit
- Repeated Start

FIGURE 9-16: MSSP BLOCK DIAGRAM (I^2C MASTER MODE)

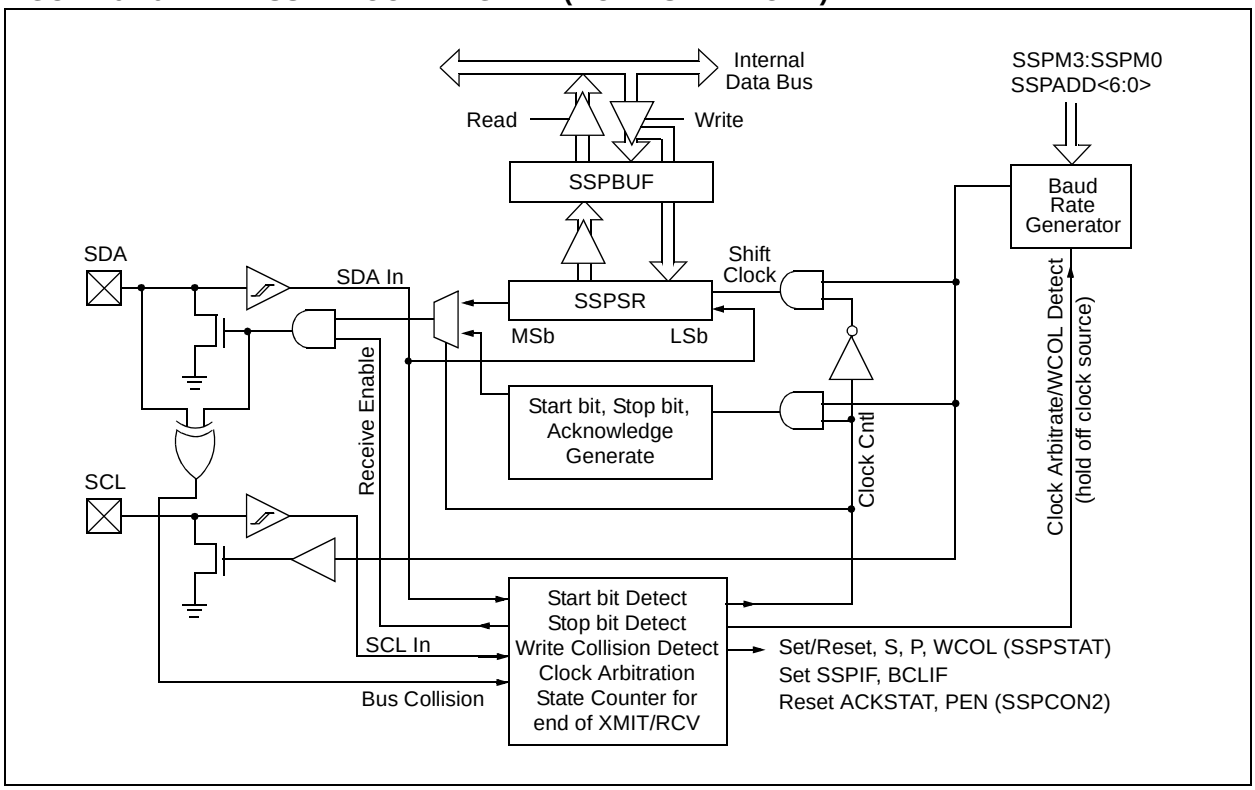

9.4.6.1 I^{2}C Master Mode Operation

The master device generates all of the serial clock pulses and the Start and Stop conditions. A transfer is ended with a Stop condition or with a Repeated Start condition. Since the Repeated Start condition is also the beginning of the next serial transfer, the I^{2}C bus will not be released.

In Master Transmitter mode, serial data is output through SDA while SCL outputs the serial clock. The first byte transmitted contains the slave address of the receiving device (7 bits) and the Read/Write (R/$\overline{W}$) bit. In this case, the R/$\overline{W}$ bit will be logic '0'. Serial data is transmitted 8 bits at a time. After each byte is transmitted, an Acknowledge bit is received. Start and Stop conditions are output to indicate the beginning and the end of a serial transfer.

In Master Receive mode, the first byte transmitted contains the slave address of the transmitting device (7 bits) and the R/$\overline{W}$ bit. In this case, the R/$\overline{W}$ bit will be logic '1'. Thus, the first byte transmitted is a 7-bit slave address followed by a '1' to indicate the receive bit. Serial data is received via SDA while SCL outputs the serial clock. Serial data is received 8 bits at a time. After each byte is received, an Acknowledge bit is transmitted. Start and Stop conditions indicate the beginning and end of transmission.

The baud rate generator used for the SPI mode operation is used to set the SCL clock frequency for either 100 kHz, 400 kHz or 1 MHz I^{2}C operation. See **Section 9.4.7 "Baud Rate Generator"** for more detail.

A typical transmit sequence would go as follows:

1. The user generates a Start condition by setting the Start Enable bit, SEN (SSPCON2<0>).
2. SSPIF is set. The MSSP module will wait the required Start time before any other operation takes place.
3. The user loads the SSPBUF with the slave address to transmit.
4. Address is shifted out the SDA pin until all 8 bits are transmitted.
5. The MSSP module shifts in the ACK bit from the slave device and writes its value into the SSPCON2 register (SSPCON2<6>).
6. The MSSP module generates an interrupt at the end of the ninth clock cycle by setting the SSPIF bit.
7. The user loads the SSPBUF with eight bits of data.
8. Data is shifted out the SDA pin until all 8 bits are transmitted.
9. The MSSP module shifts in the ACK bit from the slave device and writes its value into the SSPCON2 register (SSPCON2<6>).
10. The MSSP module generates an interrupt at the end of the ninth clock cycle by setting the SSPIF bit.
11. The user generates a Stop condition by setting the Stop Enable bit, PEN (SSPCON2<2>).
12. Interrupt is generated once the Stop condition is complete.

© 2001-2013 Microchip Technology Inc.

9.4.7 BAUD RATE GENERATOR

In I^{2}C Master mode, the Baud Rate Generator (BRG) reload value is placed in the lower 7 bits of the SSPADD register (Figure 9-17). When a write occurs to SSPBUF, the Baud Rate Generator will automatically begin counting. The BRG counts down to 0 and stops until another reload has taken place. The BRG count is decremented twice per instruction cycle (T_{CY}) on the Q2 and Q4 clocks. In I^{2}C Master mode, the BRG is reloaded automatically.

Once the given operation is complete (i.e., transmission of the last data bit is followed by $\overline{ACK}$), the internal clock will automatically stop counting and the SCL pin will remain in its last state.

Table 9-3 demonstrates clock rates based on instruction cycles and the BRG value loaded into SSPADD.

FIGURE 9-17: BAUD RATE GENERATOR BLOCK DIAGRAM

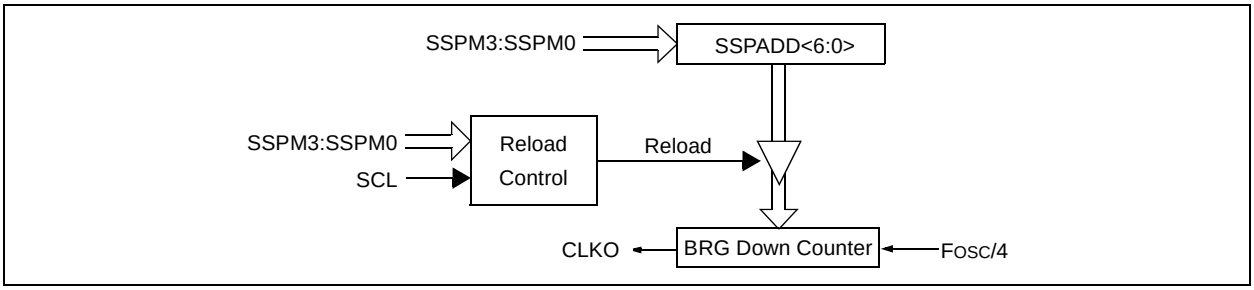

TABLE 9-3: I^{2}C CLOCK RATE W/BRG

F_{CY}	F_{CY}*2	BRG Value	F_{SCL} (2 Rollovers of BRG)
10 MHz	20 MHz	19h	400 kHz(1)
10 MHz	20 MHz	20h	312.5 kHz
10 MHz	20 MHz	3Fh	100 kHz
4 MHz	8 MHz	0Ah	400 kHz(1)
4 MHz	8 MHz	0Dh	308 kHz
4 MHz	8 MHz	28h	100 kHz
1 MHz	2 MHz	03h	333 kHz(1)
1 MHz	2 MHz	0Ah	100 kHz
1 MHz	2 MHz	00h	1 MHz(1)

Note 1: The I^{2}C interface does not conform to the 400 kHz I^{2}C specification (which applies to rates greater than 100 kHz) in all details, but may be used with care where higher rates are required by the application.

9.4.7.1 Clock Arbitration

Clock arbitration occurs when the master, during any receive, transmit or Repeated Start/Stop condition, deasserts the SCL pin (SCL allowed to float high). When the SCL pin is allowed to float high, the Baud Rate Generator (BRG) is suspended from counting until the SCL pin is actually sampled high. When the SCL pin is sampled high, the Baud Rate Generator is reloaded with the contents of SSPADD<6:0> and begins counting. This ensures that the SCL high time will always be at least one BRG rollover count, in the event that the clock is held low by an external device (Figure 9-17).

FIGURE 9-18: BAUD RATE GENERATOR TIMING WITH CLOCK ARBITRATION

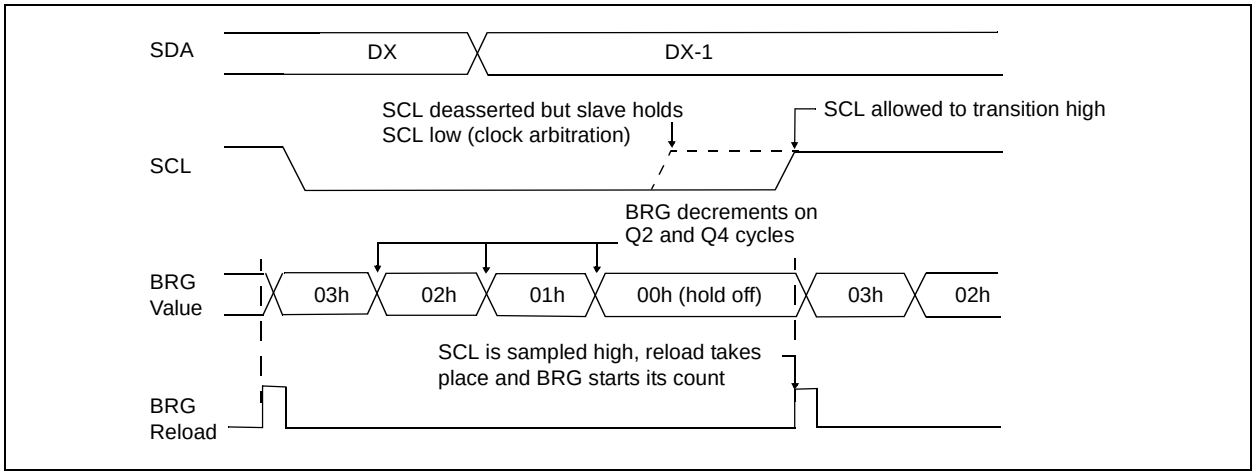

© 2001-2013 Microchip Technology Inc.

9.4.8 I²C MASTER MODE START CONDITION TIMING

To initiate a Start condition, the user sets the Start condition enable bit, SEN (SSPCON2<0>). If the SDA and SCL pins are sampled high, the Baud Rate Generator is reloaded with the contents of SSPADD<6:0> and starts its count. If SCL and SDA are both sampled high when the Baud Rate Generator times out (TBRG), the SDA pin is driven low. The action of the SDA being driven low, while SCL is high, is the Start condition and causes the S bit (SSPSTAT<3>) to be set. Following this, the Baud Rate Generator is reloaded with the contents of SSPADD<6:0> and resumes its count. When the Baud Rate Generator times out (TBRG), the SEN bit (SSPCON2<0>) will be automatically cleared by hardware, the Baud Rate Generator is suspended, leaving the SDA line held low and the Start condition is complete.

Note:	If at the beginning of the Start condition, the SDA and SCL pins are already sampled low, or if during the Start condition, the SCL line is sampled low before the SDA line is driven low, a bus collision occurs, the Bus Collision Interrupt Flag (BCLIF) is set, the Start condition is aborted and the I²C module is reset into its Idle state.

9.4.8.1 WCOL Status Flag

If the user writes the SSPBUF when a Start sequence is in progress, the WCOL is set and the contents of the buffer are unchanged (the write doesn't occur).

Note:	Because queueing of events is not allowed, writing to the lower 5 bits of SSPCON2 is disabled until the Start condition is complete.

FIGURE 9-19: FIRST START BIT TIMING

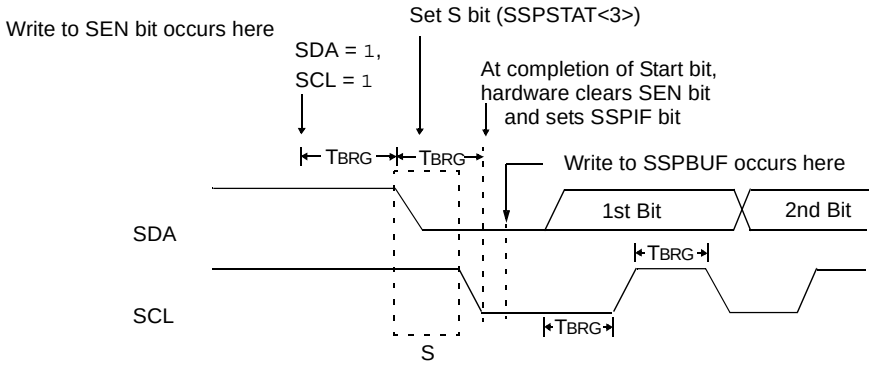

9.4.9 I²C MASTER MODE REPEATED START CONDITION TIMING

A Repeated Start condition occurs when the RSEN bit (SSPCON2<1>) is programmed high and the I²C logic module is in the Idle state. When the RSEN bit is set, the SCL pin is asserted low. When the SCL pin is sampled low, the Baud Rate Generator is loaded with the contents of SSPADD<5:0> and begins counting. The SDA pin is released (brought high) for one Baud Rate Generator count (TBRG). When the Baud Rate Generator times out, if SDA is sampled high, the SCL pin will be deasserted (brought high). When SCL is sampled high, the Baud Rate Generator is reloaded with the contents of SSPADD<6:0> and begins counting. SDA and SCL must be sampled high for one TBRG. This action is then followed by assertion of the SDA pin (SDA = 0) for one TBRG while SCL is high. Following this, the RSEN bit (SSPCON2<1>) will be automatically cleared and the Baud Rate Generator will not be reloaded, leaving the SDA pin held low. As soon as a Start condition is detected on the SDA and SCL pins, the S bit (SSPSTAT<3>) will be set. The SSPIF bit will not be set until the Baud Rate Generator has timed out.

> **Note 1:** If RSEN is programmed while any other event is in progress, it will not take effect.
>
> **2:** A bus collision during the Repeated Start condition occurs if:
>
> - SDA is sampled low when SCL goes from low to high.
> - SCL goes low before SDA is asserted low. This may indicate that another master is attempting to transmit a data '1'.

Immediately following the SSPIF bit getting set, the user may write the SSPBUF with the 7-bit address in 7-bit mode or the default first address in 10-bit mode. After the first eight bits are transmitted and an ACK is received, the user may then transmit an additional eight bits of address (10-bit mode) or eight bits of data (7-bit mode).

9.4.9.1 WCOL Status Flag

If the user writes the SSPBUF when a Repeated Start sequence is in progress, the WCOL is set and the contents of the buffer are unchanged (the write doesn't occur).

> **Note:** Because queueing of events is not allowed, writing of the lower 5 bits of SSPCON2 is disabled until the Repeated Start condition is complete.

FIGURE 9-20: REPEAT START CONDITION WAVEFORM

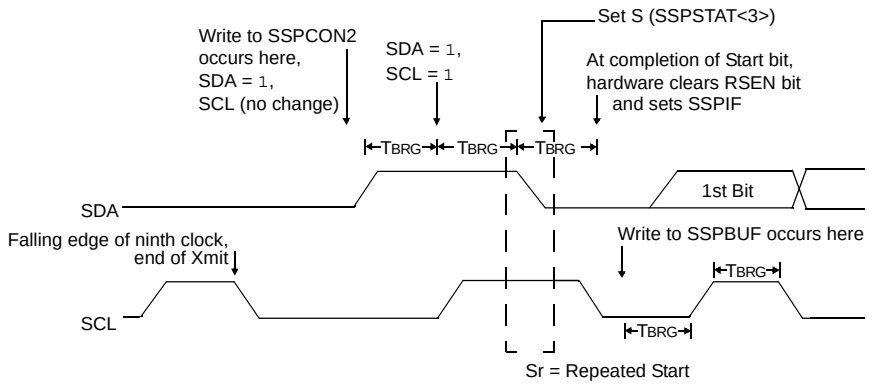

© 2001-2013 Microchip Technology Inc.

9.4.10 I^{2}C MASTER MODE TRANSMISSION

Transmission of a data byte, a 7-bit address or the other half of a 10-bit address is accomplished by simply writing a value to the SSPBUF register. This action will set the Buffer Full flag bit, BF, and allow the Baud Rate Generator to begin counting and start the next transmission. Each bit of address/data will be shifted out onto the SDA pin after the falling edge of SCL is asserted (see data hold time specification, parameter #106). SCL is held low for one Baud Rate Generator rollover count (TBRG). Data should be valid before SCL is released high (see data setup time specification, parameter #107). When the SCL pin is released high, it is held that way for TBRG. The data on the SDA pin must remain stable for that duration and some hold time after the next falling edge of SCL. After the eighth bit is shifted out (the falling edge of the eighth clock), the BF flag is cleared and the master releases SDA. This allows the slave device being addressed to respond with an $\overline{\text{ACK}}$ bit during the ninth bit time, if an address match occurred or if data was received properly. The status of $\overline{\text{ACK}}$ is written into the ACKDT bit on the falling edge of the ninth clock. If the master receives an Acknowledge, the Acknowledge Status bit, ACKSTAT, is cleared. If not, the bit is set. After the ninth clock, the SSPIF bit is set and the master clock (Baud Rate Generator) is suspended until the next data byte is loaded into the SSPBUF, leaving SCL low and SDA unchanged (Figure 9-21).

After the write to the SSPBUF, each bit of address will be shifted out on the falling edge of SCL, until all seven address bits and the R/$\overline{\text{W}}$ bit are completed. On the falling edge of the eighth clock, the master will deassert the SDA pin, allowing the slave to respond with an Acknowledge. On the falling edge of the ninth clock, the master will sample the SDA pin to see if the address was recognized by a slave. The status of the ACK bit is loaded into the ACKSTAT status bit (SSPCON2<6>). Following the falling edge of the ninth clock transmission of the address, the SSPIF is set, the BF flag is cleared and the Baud Rate Generator is turned off until another write to the SSPBUF takes place, holding SCL low and allowing SDA to float.

9.4.10.1 BF Status Flag

In Transmit mode, the BF bit (SSPSTAT<0>) is set when the CPU writes to SSPBUF and is cleared when all eight bits are shifted out.

9.4.10.2 WCOL Status Flag

If the user writes the SSPBUF when a transmit is already in progress (i.e., SSPSR is still shifting out a data byte), the WCOL is set and the contents of the buffer are unchanged (the write doesn't occur).

WCOL must be cleared in software.

9.4.10.3 ACKSTAT Status Flag

In Transmit mode, the ACKSTAT bit (SSPCON2<6>) is cleared when the slave has sent an Acknowledge ($\overline{\text{ACK}}$ = 0) and is set when the slave does Not Acknowledge ($\overline{\text{ACK}}$ = 1). A slave sends an Acknowledge when it has recognized its address (including a general call) or when the slave has properly received its data.

9.4.11 I^{2}C MASTER MODE RECEPTION

Master mode reception is enabled by programming the Receive Enable bit, RCEN (SSPCON2<3>).

Note:	The MSSP module must be in an Idle state before the RCEN bit is set or the RCEN bit will be disregarded.

The Baud Rate Generator begins counting and on each rollover, the state of the SCL pin changes (high to low/low to high) and data is shifted into the SSPSR. After the falling edge of the eighth clock, the receive enable flag is automatically cleared, the contents of the SSPSR are loaded into the SSPBUF, the BF flag bit is set, the SSPIF flag bit is set and the Baud Rate Generator is suspended from counting, holding SCL low. The MSSP is now in Idle state, awaiting the next command. When the buffer is read by the CPU, the BF flag bit is automatically cleared. The user can then send an Acknowledge bit at the end of reception by setting the Acknowledge Sequence Enable bit, ACKEN (SSPCON2<4>).

9.4.11.1 BF Status Flag

In receive operation, the BF bit is set when an address or data byte is loaded into SSPBUF from SSPSR. It is cleared when the SSPBUF register is read.

9.4.11.2 SSPOV Status Flag

In receive operation, the SSPOV bit is set when 8 bits are received into the SSPSR and the BF flag bit is already set from a previous reception.

9.4.11.3 WCOL Status Flag

If the user writes the SSPBUF when a receive is already in progress (i.e., SSPSR is still shifting in a data byte), the WCOL bit is set and the contents of the buffer are unchanged (the write doesn't occur).

FIGURE 9-21: I²C MASTER MODE WAVEFORM (TRANSMISSION, 7 OR 10-BIT ADDRESS)

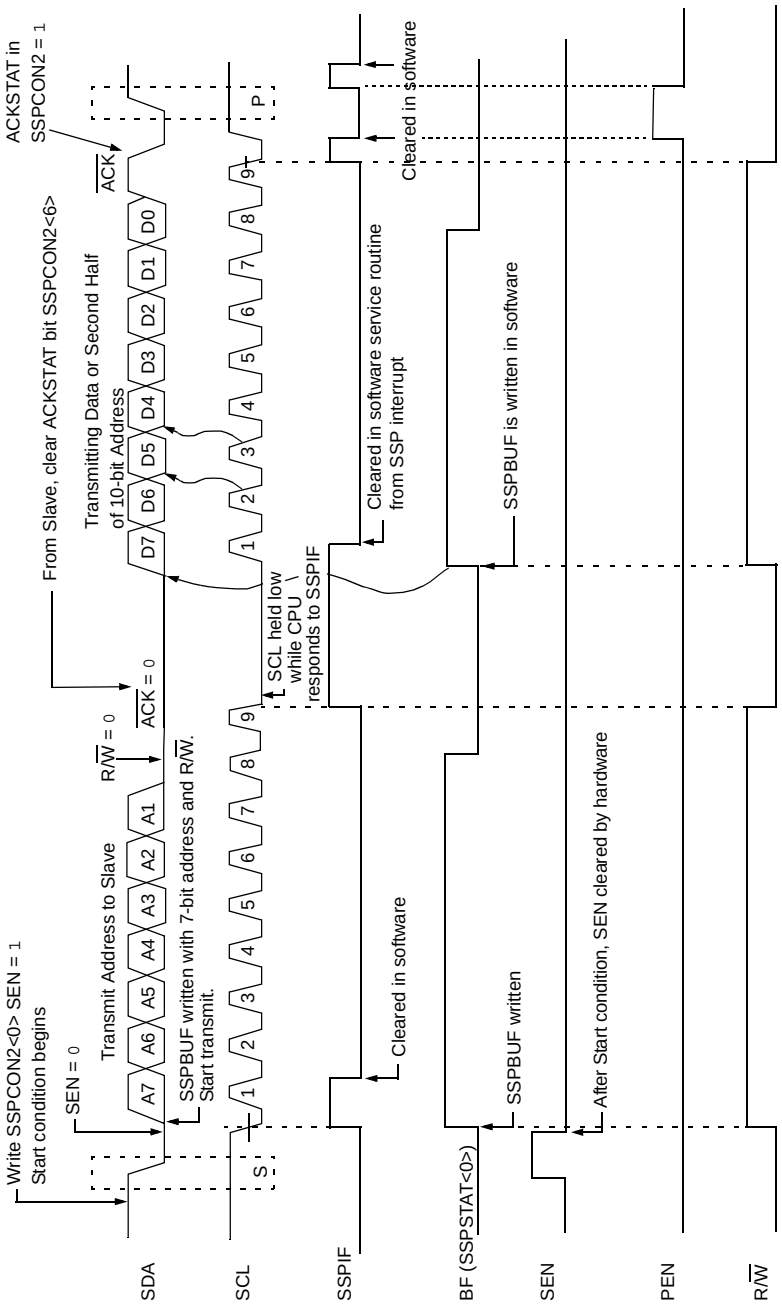

© 2001-2013 Microchip Technology Inc.

FIGURE 9-22: I²C MASTER MODE WAVEFORM (RECEPTION, 7-BIT ADDRESS)

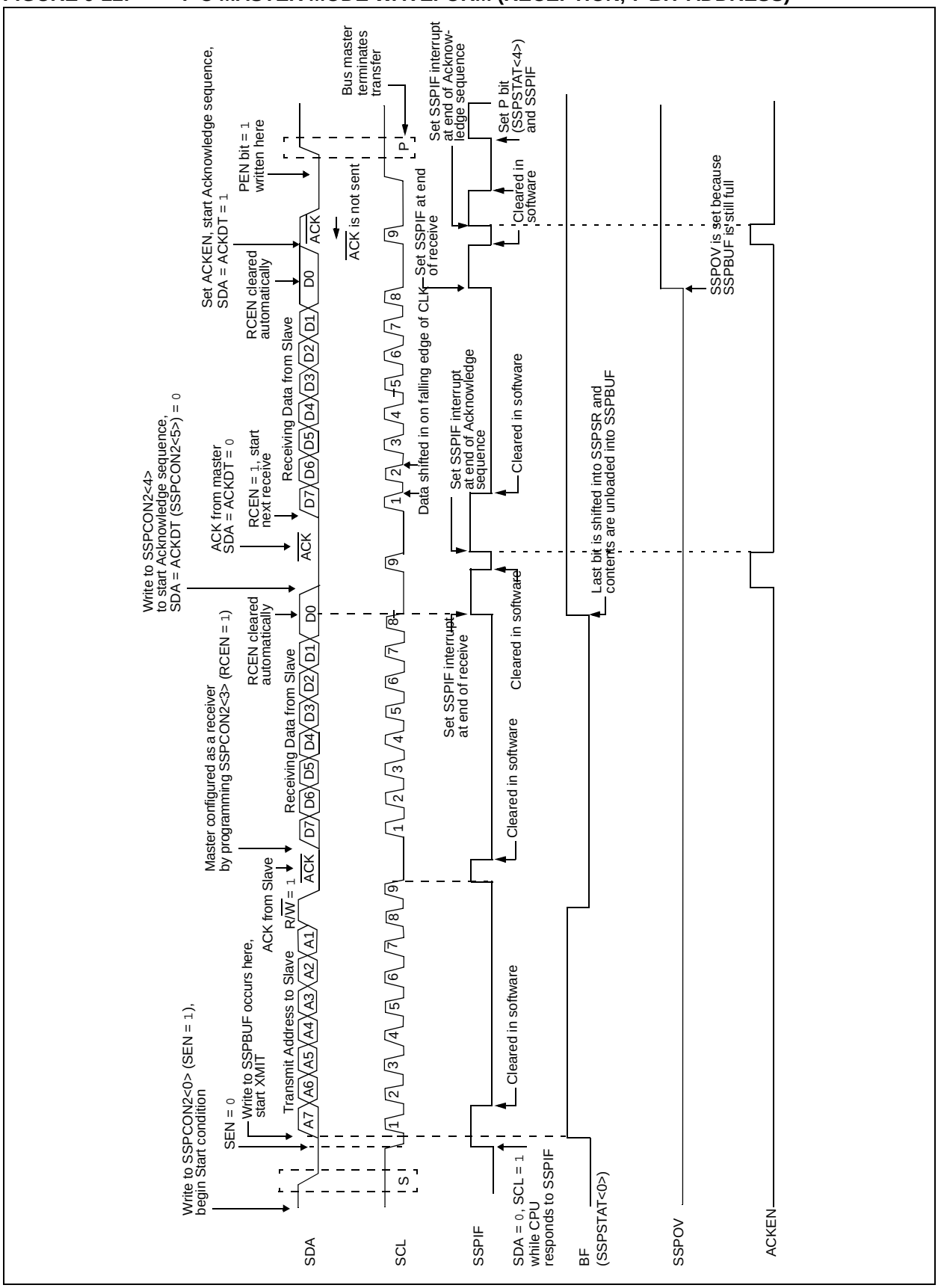

9.4.12 ACKNOWLEDGE SEQUENCE TIMING

An Acknowledge sequence is enabled by setting the Acknowledge Sequence Enable bit, ACKEN (SSPCON2<4>). When this bit is set, the SCL pin is pulled low and the contents of the Acknowledge data bit are presented on the SDA pin. If the user wishes to generate an Acknowledge, then the ACKDT bit should be cleared. If not, the user should set the ACKDT bit before starting an Acknowledge sequence. The Baud Rate Generator then counts for one rollover period (TBRG) and the SCL pin is deasserted (pulled high). When the SCL pin is sampled high (clock arbitration), the Baud Rate Generator counts for TBRG. The SCL pin is then pulled low. Following this, the ACKEN bit is automatically cleared, the baud rate generator is turned off and the MSSP module then goes into Idle mode (Figure 9-23).

9.4.12.1 WCOL Status Flag

If the user writes the SSPBUF when an Acknowledge sequence is in progress, then WCOL is set and the contents of the buffer are unchanged (the write doesn't occur).

9.4.13 STOP CONDITION TIMING

A Stop bit is asserted on the SDA pin at the end of a receive/transmit by setting the Stop Sequence Enable bit, PEN (SSPCON2<2>). At the end of a receive/transmit, the SCL line is held low after the falling edge of the ninth clock. When the PEN bit is set, the master will assert the SDA line low. When the SDA line is sampled low, the Baud Rate Generator is reloaded and counts down to 0. When the Baud Rate Generator times out, the SCL pin will be brought high and one TBRG (Baud Rate Generator rollover count) later, the SDA pin will be deasserted. When the SDA pin is sampled high while SCL is high, the P bit (SSPSTAT<4>) is set. A TBRG later, the PEN bit is cleared and the SSPIF bit is set (Figure 9-24).

9.4.13.1 WCOL Status Flag

If the user writes the SSPBUF when a Stop sequence is in progress, then the WCOL bit is set and the contents of the buffer are unchanged (the write doesn't occur).

FIGURE 9-23: ACKNOWLEDGE SEQUENCE WAVEFORM

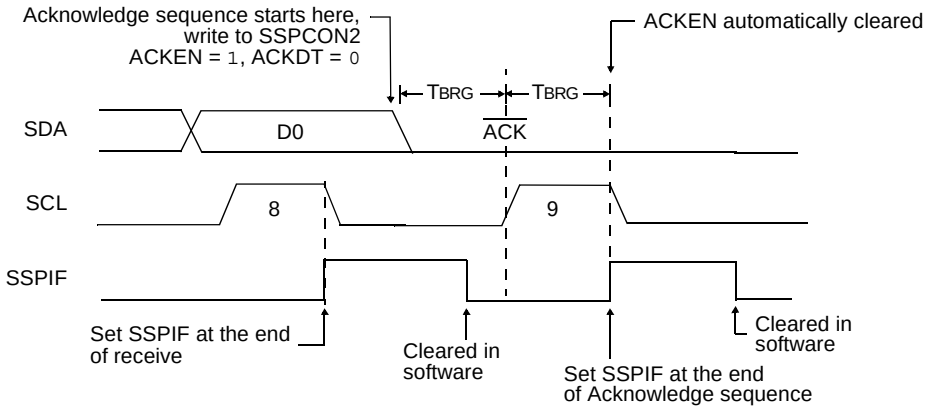

Note: TBRG = one Baud Rate Generator period.

FIGURE 9-24: STOP CONDITION RECEIVE OR TRANSMIT MODE

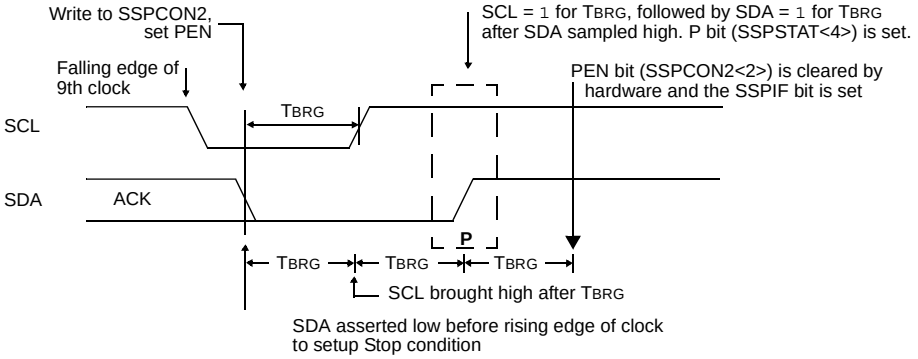

Note: TBRG = one Baud Rate Generator period.

© 2001-2013 Microchip Technology Inc.

9.4.14 SLEEP OPERATION

While in Sleep mode, the I^{2}C module can receive addresses or data and when an address match or complete byte transfer occurs, wake the processor from Sleep (if the MSSP interrupt is enabled).

9.4.15 EFFECT OF A RESET

A Reset disables the MSSP module and terminates the current transfer.

9.4.16 MULTI-MASTER MODE

In Multi-Master mode, the interrupt generation on the detection of the Start and Stop conditions allows the determination of when the bus is free. The Stop (P) and Start (S) bits are cleared from a Reset or when the MSSP module is disabled. Control of the I^{2}C bus may be taken when the P bit (SSPSTAT<4>) is set, or the bus is Idle, with both the S and P bits clear. When the bus is busy, enabling the SSP interrupt will generate the interrupt when the Stop condition occurs.

In multi-master operation, the SDA line must be monitored for arbitration to see if the signal level is at the expected output level. This check is performed in hardware with the result placed in the BCLIF bit.

The states where arbitration can be lost are:

- Address Transfer
- Data Transfer
- A Start Condition
- A Repeated Start Condition
- An Acknowledge Condition

9.4.17 MULTI -MASTER COMMUNICATION, BUS COLLISION AND BUS ARBITRATION

Multi-Master mode support is achieved by bus arbitration. When the master outputs address/data bits onto the SDA pin, arbitration takes place when the master outputs a '1' on SDA by letting SDA float high and another master asserts a '0'. When the SCL pin floats high, data should be stable. If the expected data on SDA is a '1' and the data sampled on the SDA pin = 0, then a bus collision has taken place. The master will set the Bus Collision Interrupt Flag, BCLIF, and reset the I^{2}C port to its Idle state (Figure 9-25).

If a transmit was in progress when the bus collision occurred, the transmission is halted, the BF flag is cleared, the SDA and SCL lines are deasserted and the SSPBUF can be written to. When the user services the bus collision Interrupt Service Routine and if the I^{2}C bus is free, the user can resume communication by asserting a Start condition.

If a Start, Repeated Start, Stop or Acknowledge condition was in progress when the bus collision occurred, the condition is aborted, the SDA and SCL lines are deasserted and the respective control bits in the SSPCON2 register are cleared. When the user services the bus collision Interrupt Service Routine and if the I^{2}C bus is free, the user can resume communication by asserting a Start condition.

The Master will continue to monitor the SDA and SCL pins. If a Stop condition occurs, the SSPIF bit will be set.

A write to the SSPBUF will start the transmission of data at the first data bit regardless of where the transmitter left off when the bus collision occurred.

In Multi-Master mode, the interrupt generation on the detection of Start and Stop conditions allows the determination of when the bus is free. Control of the I^{2}C bus can be taken when the P bit is set in the SSPSTAT register or the bus is Idle and the S and P bits are cleared.

FIGURE 9-25: BUS COLLISION TIMING FOR TRANSMIT AND ACKNOWLEDGE

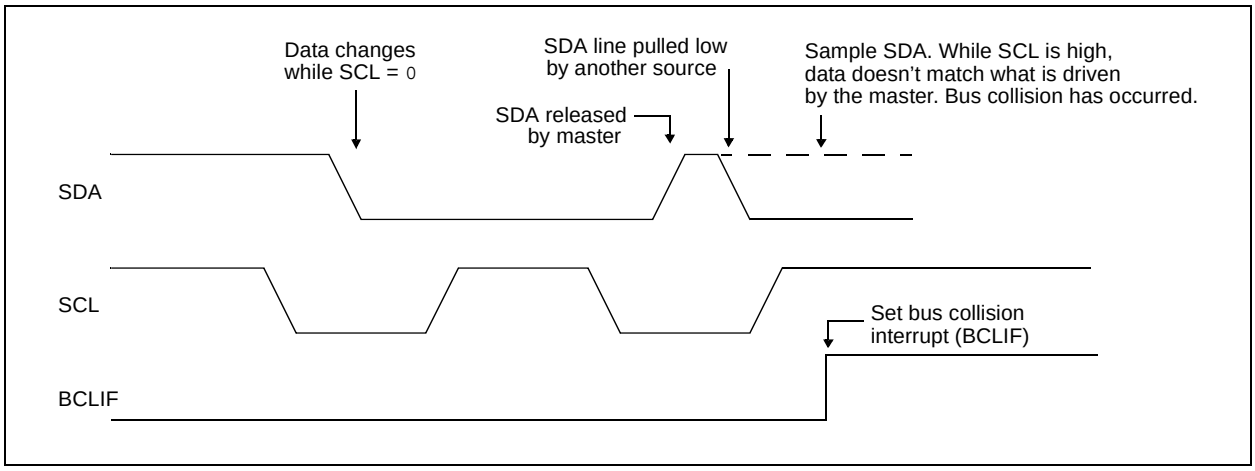

9.4.17.1 Bus Collision During a Start Condition

During a Start condition, a bus collision occurs if:

a) SDA or SCL are sampled low at the beginning of the Start condition (Figure 9-26).

b) SCL is sampled low before SDA is asserted low (Figure 9-27).

During a Start condition, both the SDA and the SCL pins are monitored.

If the SDA pin is already low, or the SCL pin is already low, then all of the following occur:

- the Start condition is aborted,
- the BCLIF flag is set and
- the MSSP module is reset to its Idle state (Figure 9-26).

The Start condition begins with the SDA and SCL pins deasserted. When the SDA pin is sampled high, the Baud Rate Generator is loaded from SSPADD<6:0> and counts down to 0. If the SCL pin is sampled low while SDA is high, a bus collision occurs because it is assumed that another master is attempting to drive a data '1' during the Start condition.

If the SDA pin is sampled low during this count, the BRG is reset and the SDA line is asserted early (Figure 9-28). If, however, a '1' is sampled on the SDA pin, the SDA pin is asserted low at the end of the BRG count. The Baud Rate Generator is then reloaded and counts down to 0 and during this time, if the SCL pin is sampled as '0', a bus collision does not occur. At the end of the BRG count, the SCL pin is asserted low.

> **Note:** The reason that bus collision is not a factor during a Start condition is that no two bus masters can assert a Start condition at the exact same time. Therefore, one master will always assert SDA before the other. This condition does not cause a bus collision because the two masters must be allowed to arbitrate the first address following the Start condition. If the address is the same, arbitration must be allowed to continue into the data portion, Repeated Start or Stop conditions.

FIGURE 9-26: BUS COLLISION DURING START CONDITION (SDA ONLY)

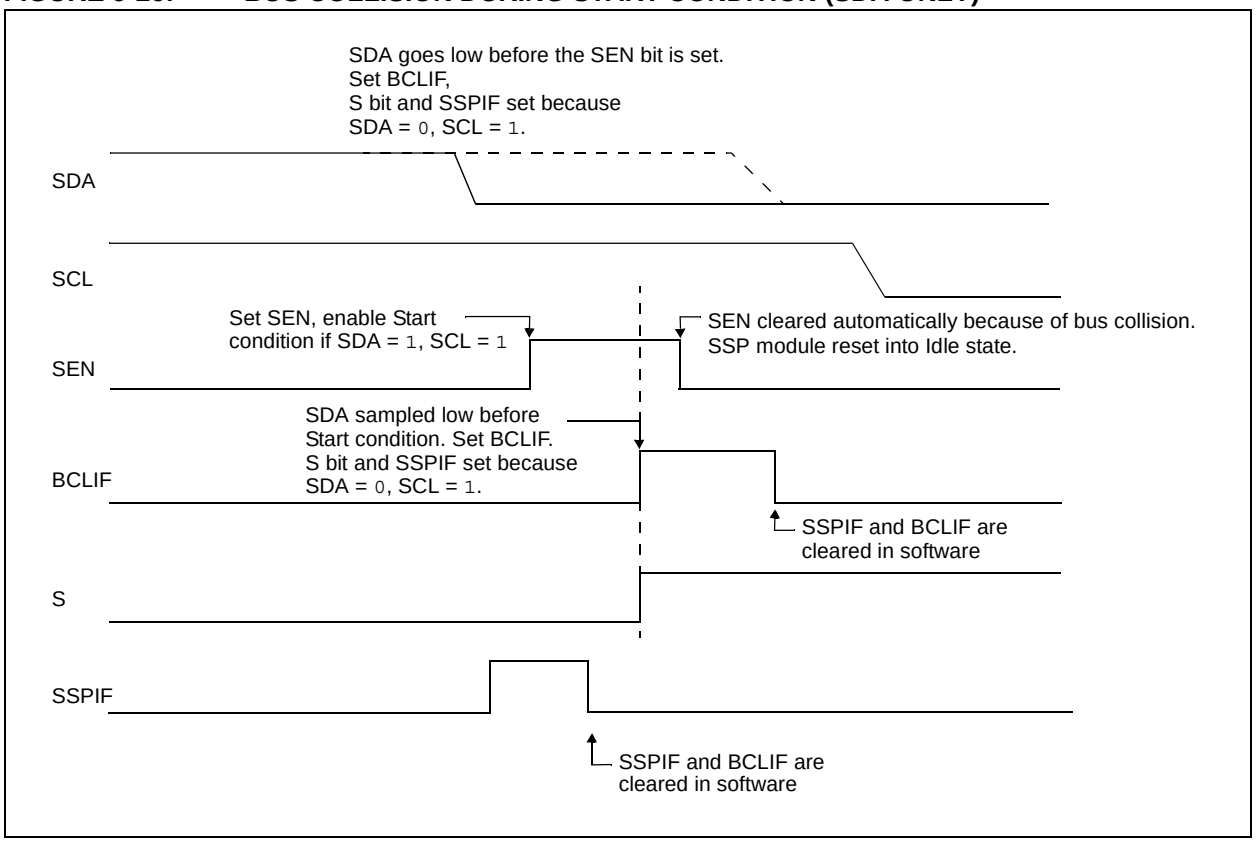

© 2001-2013 Microchip Technology Inc.

FIGURE 9-27: BUS COLLISION DURING START CONDITION (SCL = 0)

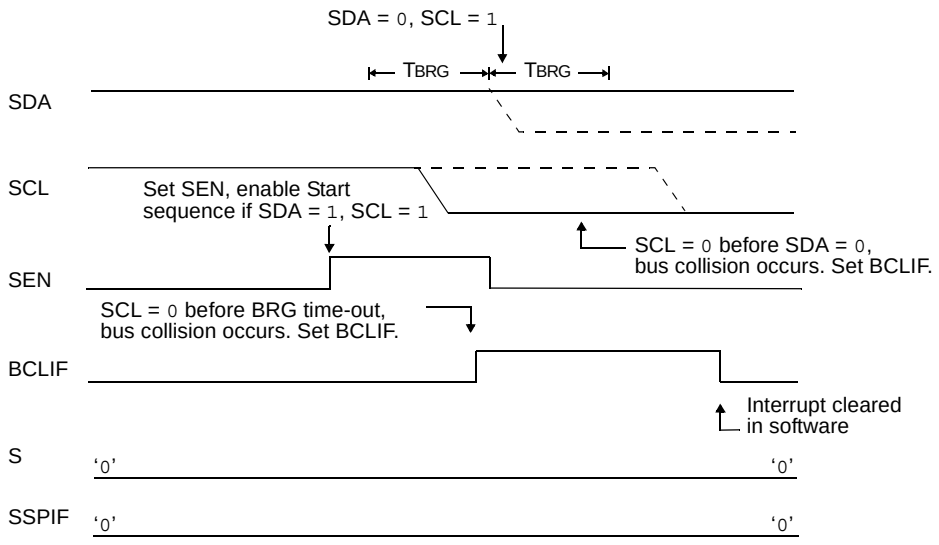

FIGURE 9-28: BRG RESET DUE TO SDA ARBITRATION DURING START CONDITION

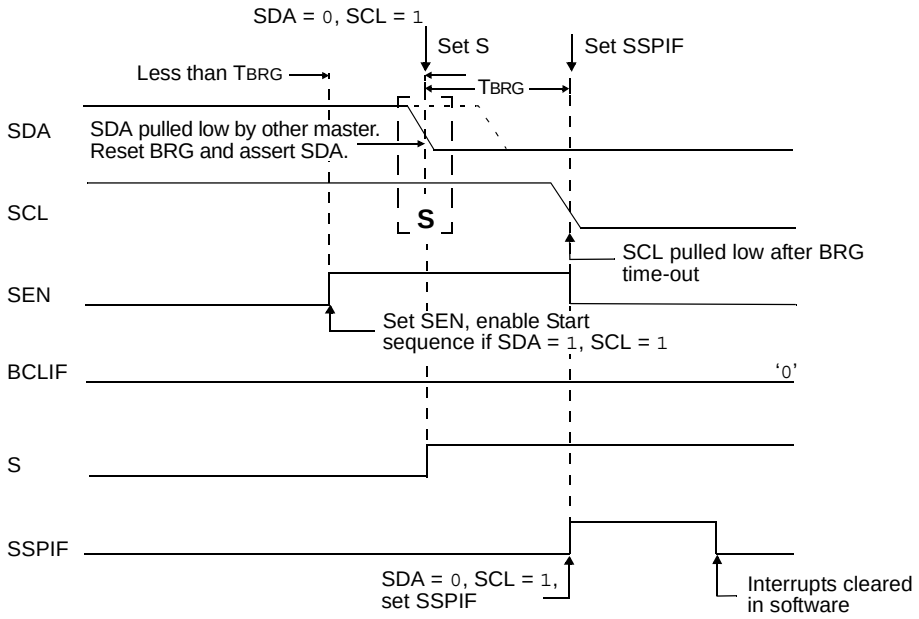

9.4.17.2 Bus Collision During a Repeated Start Condition

During a Repeated Start condition, a bus collision occurs if:

a) A low level is sampled on SDA when SCL goes from low level to high level.

b) SCL goes low before SDA is asserted low, indicating that another master is attempting to transmit a data '1'.

When the user deasserts SDA and the pin is allowed to float high, the BRG is loaded with SSPADD<6:0> and counts down to 0. The SCL pin is then deasserted and when sampled high, the SDA pin is sampled.

If SDA is low, a bus collision has occurred (i.e., another master is attempting to transmit a data '0', see Figure 9-29). If SDA is sampled high, the BRG is reloaded and begins counting. If SDA goes from high to low before the BRG times out, no bus collision occurs because no two masters can assert SDA at exactly the same time.

If SCL goes from high to low before the BRG times out and SDA has not already been asserted, a bus collision occurs. In this case, another master is attempting to transmit a data '1' during the Repeated Start condition (Figure 9-30).

If at the end of the BRG time-out, both SCL and SDA are still high, the SDA pin is driven low and the BRG is reloaded and begins counting. At the end of the count, regardless of the status of the SCL pin, the SCL pin is driven low and the Repeated Start condition is complete.

FIGURE 9-29: BUS COLLISION DURING A REPEATED START CONDITION (CASE 1)

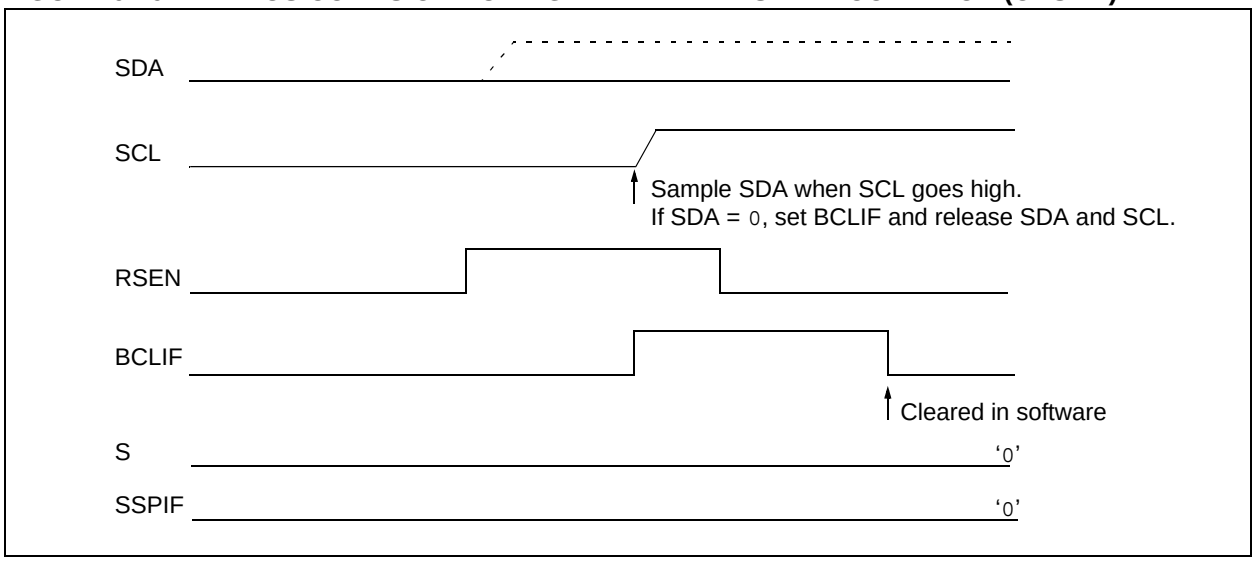

FIGURE 9-30: BUS COLLISION DURING REPEATED START CONDITION (CASE 2)

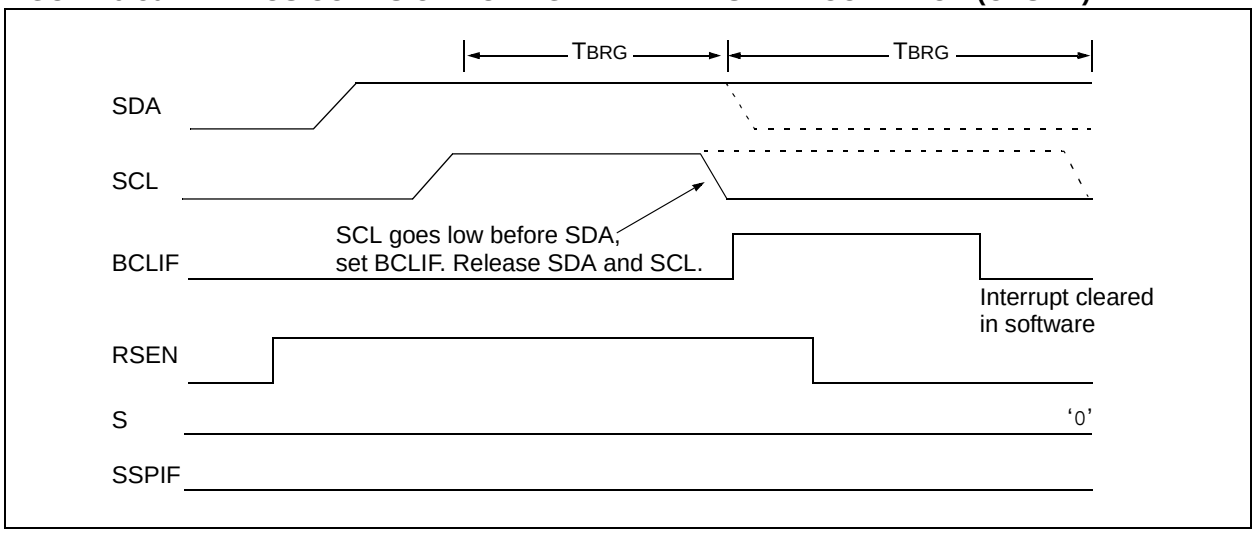

© 2001-2013 Microchip Technology Inc.

9.4.17.3 Bus Collision During a Stop Condition

Bus collision occurs during a Stop condition if:

a) After the SDA pin has been deasserted and allowed to float high, SDA is sampled low after the BRG has timed out.

b) After the SCL pin is deasserted, SCL is sampled low before SDA goes high.

The Stop condition begins with SDA asserted low. When SDA is sampled low, the SCL pin is allowed to float. When the pin is sampled high (clock arbitration), the Baud Rate Generator is loaded with SSPADD<6:0> and counts down to 0. After the BRG times out, SDA is sampled. If SDA is sampled low, a bus collision has occurred. This is due to another master attempting to drive a data '0' (Figure 9-31). If the SCL pin is sampled low before SDA is allowed to float high, a bus collision occurs. This is another case of another master attempting to drive a data '0' (Figure 9-32).

FIGURE 9-31: BUS COLLISION DURING A STOP CONDITION (CASE 1)

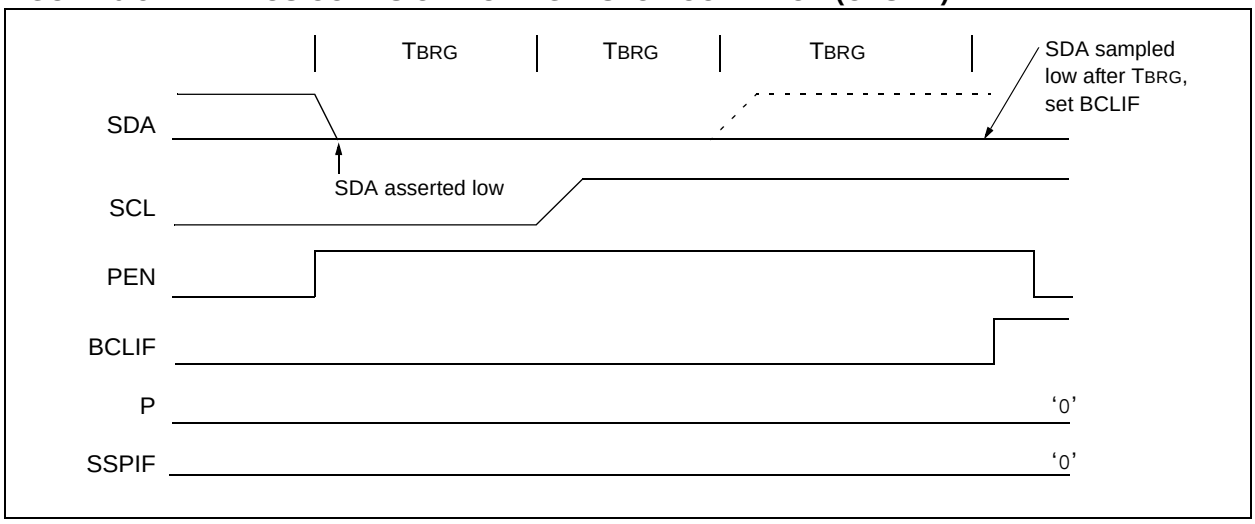

FIGURE 9-32: BUS COLLISION DURING A STOP CONDITION (CASE 2)

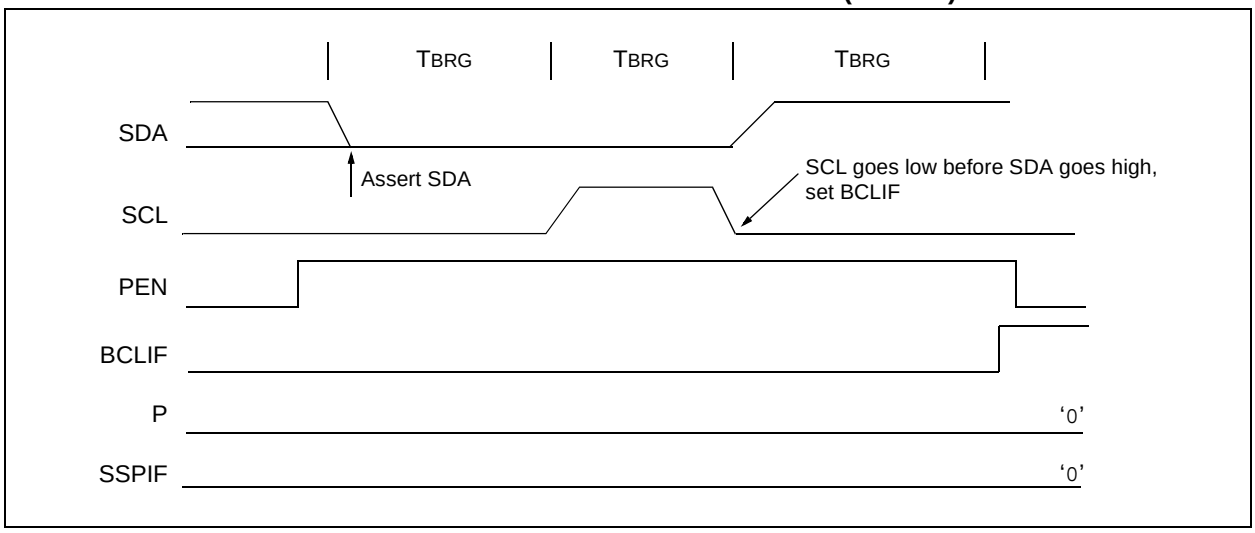

NOTES:

© 2001-2013 Microchip Technology Inc.

10.0 ADDRESSABLE UNIVERSAL SYNCHRONOUS ASYNCHRONOUS RECEIVER TRANSMITTER (USART)

The Universal Synchronous Asynchronous Receiver Transmitter (USART) module is one of the two serial I/O modules. (USART is also known as a Serial Communications Interface or SCI.) The USART can be configured as a full-duplex asynchronous system that can communicate with peripheral devices, such as CRT terminals and personal computers, or it can be configured as a half-duplex synchronous system that can communicate with peripheral devices, such as A/D or D/A integrated circuits, serial EEPROMs, etc.

The USART can be configured in the following modes:

- Asynchronous (full-duplex)
- Synchronous – Master (half-duplex)
- Synchronous – Slave (half-duplex)

Bit SPEN (RCSTA<7>) and bits TRISC<7:6> have to be set in order to configure pins RC6/TX/CK and RC7/RX/DT as the Universal Synchronous Asynchronous Receiver Transmitter.

The USART module also has a multi-processor communication capability using 9-bit address detection.

REGISTER 10-1: TXSTA: TRANSMIT STATUS AND CONTROL REGISTER (ADDRESS 98h)

R/W-0	R/W-0	R/W-0	R/W-0	U-0	R/W-0	R-1	R/W-0
CSRC	TX9	TXEN	SYNC	—	BRGH	TRMT	TX9D
bit 7							bit 0

bit 7 **CSRC:** Clock Source Select bit
Asynchronous mode:
Don't care.
Synchronous mode:
1 = Master mode (clock generated internally from BRG)
0 = Slave mode (clock from external source)

bit 6 **TX9**: 9-bit Transmit Enable bit
1 = Selects 9-bit transmission
0 = Selects 8-bit transmission

bit 5 **TXEN**: Transmit Enable bit
1 = Transmit enabled
0 = Transmit disabled

Note: SREN/CREN overrides TXEN in Sync mode.

bit 4 **SYNC**: USART Mode Select bit
1 = Synchronous mode
0 = Asynchronous mode

bit 3 **Unimplemented:** Read as '0'

bit 2 **BRGH**: High Baud Rate Select bit
Asynchronous mode:
1 = High speed
0 = Low speed
Synchronous mode:
Unused in this mode.

bit 1 **TRMT**: Transmit Shift Register Status bit
1 = TSR empty
0 = TSR full

bit 0 **TX9D:** 9th bit of Transmit Data, can be Parity bit

Legend:			
R = Readable bit	W = Writable bit	U = Unimplemented bit, read as '0'	
- n = Value at POR	'1' = Bit is set	'0' = Bit is cleared	x = Bit is unknown

REGISTER 10-2: RCSTA: RECEIVE STATUS AND CONTROL REGISTER (ADDRESS 18h)

R/W-0	R/W-0	R/W-0	R/W-0	R/W-0	R-0	R-0	R-x
SPEN	RX9	SREN	CREN	ADDEN	FERR	OERR	RX9D
bit 7							bit 0

bit 7 **SPEN:** Serial Port Enable bit
1 = Serial port enabled (configures RC7/RX/DT and RC6/TX/CK pins as serial port pins)
0 = Serial port disabled

bit 6 **RX9**: 9-bit Receive Enable bit
1 = Selects 9-bit reception
0 = Selects 8-bit reception

bit 5 **SREN**: Single Receive Enable bit
Asynchronous mode:
Don't care.
Synchronous mode – Master:
1 = Enables single receive
0 = Disables single receive
This bit is cleared after reception is complete.
Synchronous mode – Slave:
Don't care.

bit 4 **CREN**: Continuous Receive Enable bit
Asynchronous mode:
1 = Enables continuous receive
0 = Disables continuous receive
Synchronous mode:
1 = Enables continuous receive until enable bit CREN is cleared (CREN overrides SREN)
0 = Disables continuous receive

bit 3 **ADDEN:** Address Detect Enable bit
Asynchronous mode 9-bit (RX9 = 1):
1 = Enables address detection, enables interrupt and load of the receive buffer when RSR<8> is set
0 = Disables address detection, all bytes are received and ninth bit can be used as parity bit

bit 2 **FERR**: Framing Error bit
1 = Framing error (can be updated by reading RCREG register and receive next valid byte)
0 = No framing error

bit 1 **OERR**: Overrun Error bit
1 = Overrun error (can be cleared by clearing bit CREN)
0 = No overrun error

bit 0 **RX9D:** 9th bit of Received Data (can be parity bit but must be calculated by user firmware)

Legend:			
R = Readable bit	W = Writable bit	U = Unimplemented bit, read as '0'	
- n = Value at POR	'1' = Bit is set	'0' = Bit is cleared	x = Bit is unknown

© 2001-2013 Microchip Technology Inc.

10.1 USART Baud Rate Generator (BRG)

The BRG supports both the Asynchronous and Synchronous modes of the USART. It is a dedicated 8-bit baud rate generator. The SPBRG register controls the period of a free running 8-bit timer. In Asynchronous mode, bit BRGH (TXSTA<2>) also controls the baud rate. In Synchronous mode, bit BRGH is ignored. Table 10-1 shows the formula for computation of the baud rate for different USART modes which only apply in Master mode (internal clock).

Given the desired baud rate and FOSC, the nearest integer value for the SPBRG register can be calculated using the formula in Table 10-1. From this, the error in baud rate can be determined.

It may be advantageous to use the high baud rate (BRGH = 1) even for slower baud clocks. This is because the FOSC/(16 (X + 1)) equation can reduce the baud rate error in some cases.

Writing a new value to the SPBRG register causes the BRG timer to be reset (or cleared). This ensures the BRG does not wait for a timer overflow before outputting the new baud rate.

10.1.1 SAMPLING

The data on the RC7/RX/DT pin is sampled three times by a majority detect circuit to determine if a high or a low level is present at the RX pin.

TABLE 10-1: BAUD RATE FORMULA

SYNC	BRGH = 0 (Low Speed)	BRGH = 1 (High Speed)
0	(Asynchronous) Baud Rate = FOSC/(64 (X + 1))	Baud Rate = FOSC/(16 (X + 1))
1	(Synchronous) Baud Rate = FOSC/(4 (X + 1))	N/A

Legend: X = value in SPBRG (0 to 255)

TABLE 10-2: REGISTERS ASSOCIATED WITH BAUD RATE GENERATOR

Address	Name	Bit 7	Bit 6	Bit 5	Bit 4	Bit 3	Bit 2	Bit 1	Bit 0	Value on: POR, BOR	Value on all other Resets
98h	TXSTA	CSRC	TX9	TXEN	SYNC	—	BRGH	TRMT	TX9D	0000 -010	0000 -010
18h	RCSTA	SPEN	RX9	SREN	CREN	ADDEN	FERR	OERR	RX9D	0000 000x	0000 000x
99h	SPBRG	Baud Rate Generator Register								0000 0000	0000 0000

Legend: x = unknown, - = unimplemented, read as '0'. Shaded cells are not used by the BRG.

TABLE 10-3: BAUD RATES FOR ASYNCHRONOUS MODE (BRGH = 0)

BAUD RATE (K)	Fosc = 20 MHz			Fosc = 16 MHz			Fosc = 10 MHz		
	KBAUD	% ERROR	SPBRG value (decimal)	KBAUD	% ERROR	SPBRG value (decimal)	KBAUD	% ERROR	SPBRG value (decimal)
0.3	-	-	-	-	-	-	-	-	-
1.2	1.221	1.75	255	1.202	0.17	207	1.202	0.17	129
2.4	2.404	0.17	129	2.404	0.17	103	2.404	0.17	64
9.6	9.766	1.73	31	9.615	0.16	25	9.766	1.73	15
19.2	19.531	1.72	15	19.231	0.16	12	19.531	1.72	7
28.8	31.250	8.51	9	27.778	3.55	8	31.250	8.51	4
33.6	34.722	3.34	8	35.714	6.29	6	31.250	6.99	4
57.6	62.500	8.51	4	62.500	8.51	3	52.083	9.58	2
HIGH	1.221	-	255	0.977	-	255	0.610	-	255
LOW	312.500	-	0	250.000	-	0	156.250	-	0

BAUD RATE (K)	Fosc = 4 MHz			Fosc = 3.6864 MHz		
	KBAUD	% ERROR	SPBRG value (decimal)	KBAUD	% ERROR	SPBRG value (decimal)
0.3	0.300	0	207	0.3	0	191
1.2	1.202	0.17	51	1.2	0	47
2.4	2.404	0.17	25	2.4	0	23
9.6	8.929	6.99	6	9.6	0	5
19.2	20.833	8.51	2	19.2	0	2
28.8	31.250	8.51	1	28.8	0	1
33.6	-	-	-	-	-	-
57.6	62.500	8.51	0	57.6	0	0
HIGH	0.244	-	255	0.225	-	255
LOW	62.500	-	0	57.6	-	0

TABLE 10-4: BAUD RATES FOR ASYNCHRONOUS MODE (BRGH = 1)

BAUD RATE (K)	Fosc = 20 MHz			Fosc = 16 MHz			Fosc = 10 MHz		
	KBAUD	% ERROR	SPBRG value (decimal)	KBAUD	% ERROR	SPBRG value (decimal)	KBAUD	% ERROR	SPBRG value (decimal)
0.3	-	-	-	-	-	-	-	-	-
1.2	-	-	-	-	-	-	-	-	-
2.4	-	-	-	-	-	-	2.441	1.71	255
9.6	9.615	0.16	129	9.615	0.16	103	9.615	0.16	64
19.2	19.231	0.16	64	19.231	0.16	51	19.531	1.72	31
28.8	29.070	0.94	42	29.412	2.13	33	28.409	1.36	21
33.6	33.784	0.55	36	33.333	0.79	29	32.895	2.10	18
57.6	59.524	3.34	20	58.824	2.13	16	56.818	1.36	10
HIGH	4.883	-	255	3.906	-	255	2.441	-	255
LOW	1250.000	-	0	1000.000		0	625.000	-	0

BAUD RATE (K)	Fosc = 4 MHz			Fosc = 3.6864 MHz		
	KBAUD	% ERROR	SPBRG value (decimal)	KBAUD	% ERROR	SPBRG value (decimal)
0.3	-	-	-	-	-	-
1.2	1.202	0.17	207	1.2	0	191
2.4	2.404	0.17	103	2.4	0	95
9.6	9.615	0.16	25	9.6	0	23
19.2	19.231	0.16	12	19.2	0	11
28.8	27.798	3.55	8	28.8	0	7
33.6	35.714	6.29	6	32.9	2.04	6
57.6	62.500	8.51	3	57.6	0	3
HIGH	0.977	-	255	0.9	-	255
LOW	250.000	-	0	230.4	-	0

© 2001-2013 Microchip Technology Inc.

10.2 USART Asynchronous Mode

In this mode, the USART uses standard Non-Return-to-Zero (NRZ) format (one Start bit, eight or nine data bits and one Stop bit). The most common data format is 8 bits. An on-chip, dedicated, 8-bit Baud Rate Generator can be used to derive standard baud rate frequencies from the oscillator. The USART transmits and receives the LSb first. The transmitter and receiver are functionally independent but use the same data format and baud rate. The baud rate generator produces a clock, either x16 or x64 of the bit shift rate, depending on bit BRGH (TXSTA<2>). Parity is not supported by the hardware but can be implemented in software (and stored as the ninth data bit). Asynchronous mode is stopped during Sleep.

Asynchronous mode is selected by clearing bit SYNC (TXSTA<4>).

The USART Asynchronous module consists of the following important elements:

- Baud Rate Generator
- Sampling Circuit
- Asynchronous Transmitter
- Asynchronous Receiver

10.2.1 USART ASYNCHRONOUS TRANSMITTER

The USART transmitter block diagram is shown in Figure 10-1. The heart of the transmitter is the Transmit (Serial) Shift Register (TSR). The shift register obtains its data from the Read/Write Transmit Buffer, TXREG. The TXREG register is loaded with data in software. The TSR register is not loaded until the Stop bit has been transmitted from the previous load. As soon as the Stop bit is transmitted, the TSR is loaded with new data from the TXREG register (if available). Once the TXREG register transfers the data to the TSR register (occurs in one TCY), the TXREG register is empty and flag bit, TXIF (PIR1<4>), is set. This interrupt can be enabled/disabled by setting/clearing enable bit, TXIE (PIE1<4>). Flag bit TXIF will be set regardless of the state of enable bit TXIE and cannot be cleared in software. It will reset only when new data is loaded into the TXREG register. While flag bit TXIF indicates the status of the TXREG register, another bit, TRMT (TXSTA<1>), shows the status of the TSR register. Status bit TRMT is a read-only bit which is set when the TSR register is empty. No interrupt logic is tied to this bit so the user has to poll this bit in order to determine if the TSR register is empty.

Note 1:	The TSR register is not mapped in data memory so it is not available to the user.
2:	Flag bit TXIF is set when enable bit TXEN is set. TXIF is cleared by loading TXREG.

Transmission is enabled by setting enable bit, TXEN (TXSTA<5>). The actual transmission will not occur until the TXREG register has been loaded with data and the Baud Rate Generator (BRG) has produced a shift clock (Figure 10-2). The transmission can also be started by first loading the TXREG register and then setting enable bit TXEN. Normally, when transmission is first started, the TSR register is empty. At that point, transfer to the TXREG register will result in an immediate transfer to TSR, resulting in an empty TXREG. A back-to-back transfer is thus possible (Figure 10-3). Clearing enable bit TXEN during a transmission will cause the transmission to be aborted and will reset the transmitter. As a result, the RC6/TX/CK pin will revert to high-impedance.

In order to select 9-bit transmission, transmit bit TX9 (TXSTA<6>) should be set and the ninth bit should be written to TX9D (TXSTA<0>). The ninth bit must be written before writing the 8-bit data to the TXREG register. This is because a data write to the TXREG register can result in an immediate transfer of the data to the TSR register (if the TSR is empty). In such a case, an incorrect ninth data bit may be loaded in the TSR register.

FIGURE 10-1: USART TRANSMIT BLOCK DIAGRAM

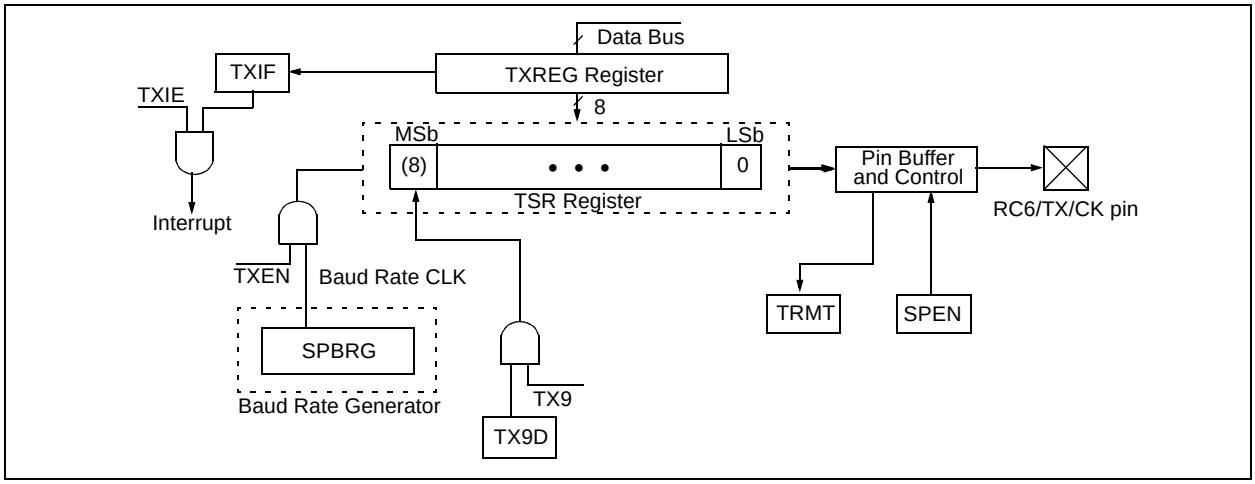

When setting up an Asynchronous Transmission, follow these steps:

1. Initialize the SPBRG register for the appropriate baud rate. If a high-speed baud rate is desired, set bit BRGH (**Section 10.1 "USART Baud Rate Generator (BRG)"**).
2. Enable the asynchronous serial port by clearing bit SYNC and setting bit SPEN.
3. If interrupts are desired, then set enable bit TXIE.
4. If 9-bit transmission is desired, then set transmit bit TX9.
5. Enable the transmission by setting bit TXEN, which will also set bit TXIF.
6. If 9-bit transmission is selected, the ninth bit should be loaded in bit TX9D.
7. Load data to the TXREG register (starts transmission).
8. If using interrupts, ensure that GIE and PEIE (bits 7 and 6) of the INTCON register are set.

FIGURE 10-2: ASYNCHRONOUS MASTER TRANSMISSION

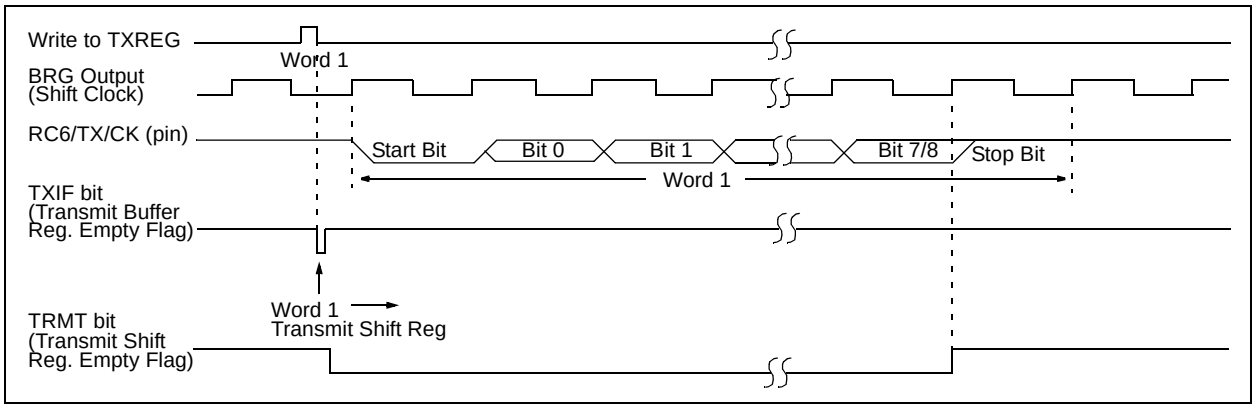

FIGURE 10-3: ASYNCHRONOUS MASTER TRANSMISSION (BACK TO BACK)

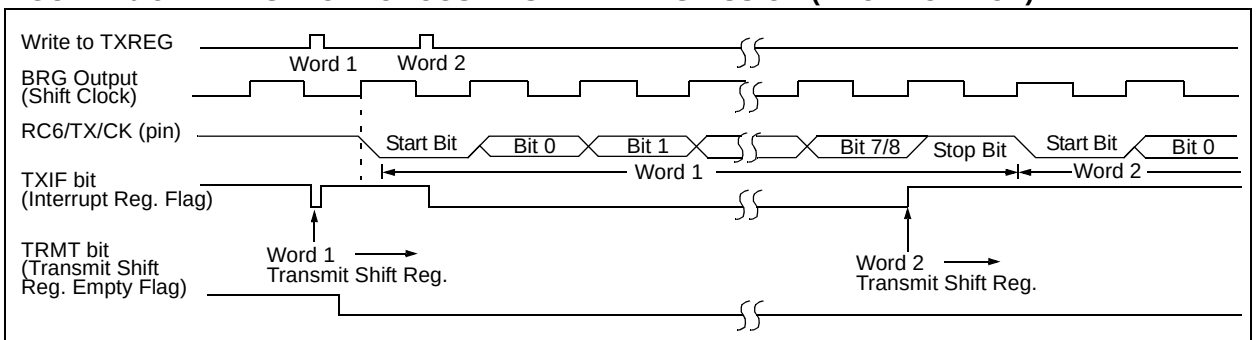

Note: This timing diagram shows two consecutive transmissions.

TABLE 10-5: REGISTERS ASSOCIATED WITH ASYNCHRONOUS TRANSMISSION

Address	Name	Bit 7	Bit 6	Bit 5	Bit 4	Bit 3	Bit 2	Bit 1	Bit 0	Value on: POR, BOR	Value on all other Resets
0Bh, 8Bh, 10Bh,18Bh	INTCON	GIE	PEIE	TMR0IE	INTE	RBIE	TMR0IF	INTF	R0IF	0000 000x	0000 000u
0Ch	PIR1	PSPIF(1)	ADIF	RCIF	TXIF	SSPIF	CCP1IF	TMR2IF	TMR1IF	0000 0000	0000 0000
18h	RCSTA	SPEN	RX9	SREN	CREN	—	FERR	OERR	RX9D	0000 -00x	0000 -00x
19h	TXREG	USART Transmit Register								0000 0000	0000 0000
8Ch	PIE1	PSPIE(1)	ADIE	RCIE	TXIE	SSPIE	CCP1IE	TMR2IE	TMR1IE	0000 0000	0000 0000
98h	TXSTA	CSRC	TX9	TXEN	SYNC	—	BRGH	TRMT	TX9D	0000 -010	0000 -010
99h	SPBRG	Baud Rate Generator Register								0000 0000	0000 0000

Legend: x = unknown, - = unimplemented locations read as '0'. Shaded cells are not used for asynchronous transmission.

Note 1: Bits PSPIE and PSPIF are reserved on 28-pin devices; always maintain these bits clear.

© 2001-2013 Microchip Technology Inc.

10.2.2 USART ASYNCHRONOUS RECEIVER

The receiver block diagram is shown in Figure 10-4. The data is received on the RC7/RX/DT pin and drives the data recovery block. The data recovery block is actually a high-speed shifter, operating at x16 times the baud rate; whereas the main receive serial shifter operates at the bit rate or at FOSC.

Once Asynchronous mode is selected, reception is enabled by setting bit CREN (RCSTA<4>).

The heart of the receiver is the Receive (Serial) Shift Register (RSR). After sampling the Stop bit, the received data in the RSR is transferred to the RCREG register (if it is empty). If the transfer is complete, flag bit, RCIF (PIR1<5>), is set. The actual interrupt can be enabled/disabled by setting/clearing enable bit, RCIE (PIE1<5>). Flag bit RCIF is a read-only bit which is cleared by the hardware. It is cleared when the RCREG register has been read and is empty. The RCREG is a double-buffered register (i.e., it is a two-deep FIFO). It is possible for two bytes of data to be received and transferred to the RCREG FIFO and a third byte to begin shifting to the RSR register. On the detection of the Stop bit of the third byte, if the RCREG register is still full, the Overrun Error bit, OERR (RCSTA<1>), will be set. The word in the RSR will be lost. The RCREG register can be read twice to retrieve the two bytes in the FIFO. Overrun bit OERR has to be cleared in software. This is done by resetting the receive logic (CREN is cleared and then set). If bit OERR is set, transfers from the RSR register to the RCREG register are inhibited and no further data will be received. It is, therefore, essential to clear error bit OERR if it is set. Framing error bit, FERR (RCSTA<2>), is set if a Stop bit is detected as clear. Bit FERR and the 9th receive bit are buffered the same way as the receive data. Reading the RCREG will load bits RX9D and FERR with new values, therefore, it is essential for the user to read the RCSTA register <u>before</u> reading the RCREG register in order not to lose the old FERR and RX9D information.

FIGURE 10-4: USART RECEIVE BLOCK DIAGRAM

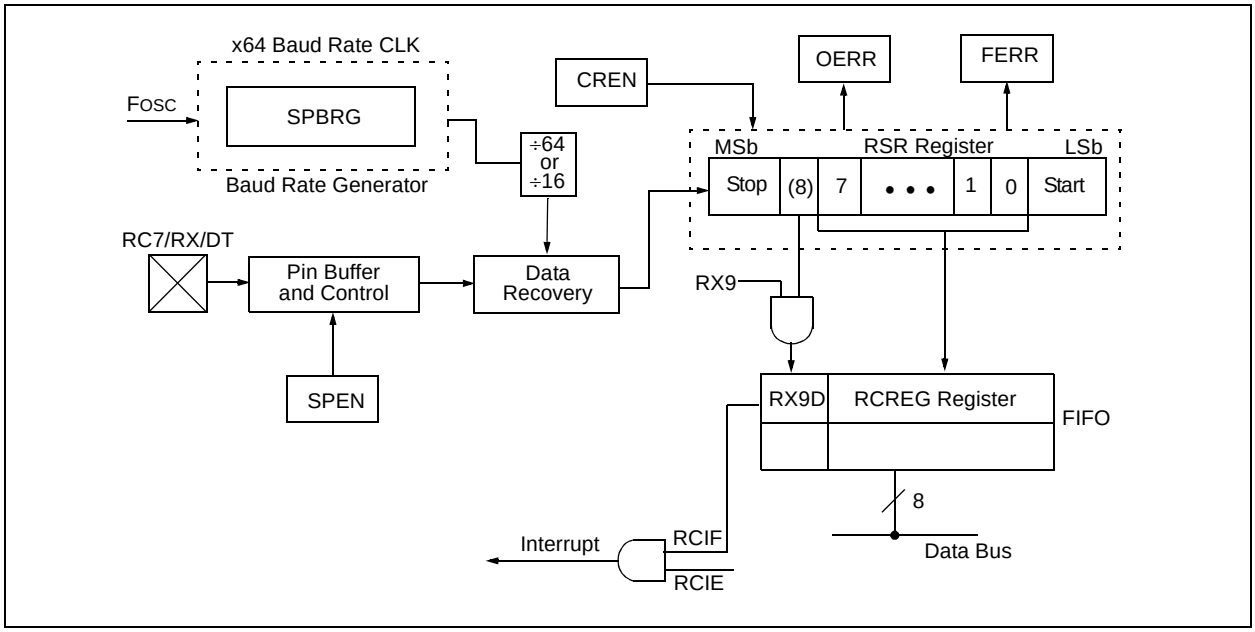

FIGURE 10-5: ASYNCHRONOUS RECEPTION

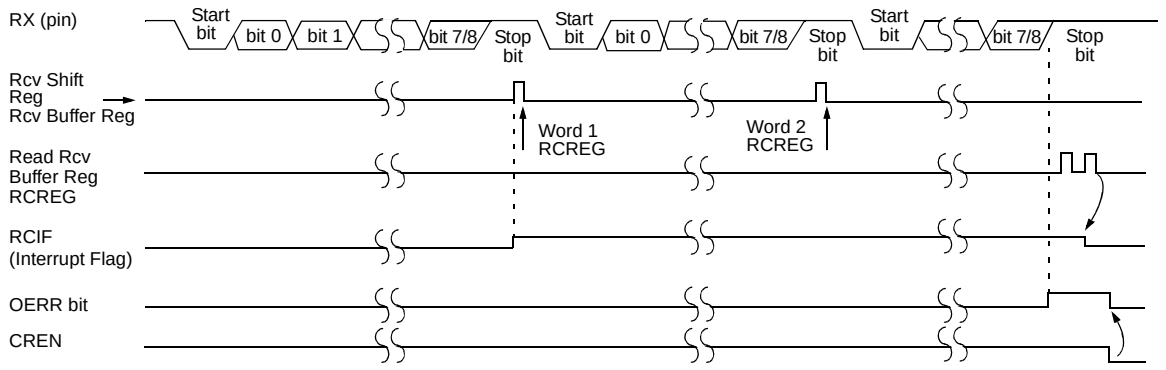

Note: This timing diagram shows three words appearing on the RX input. The RCREG (Receive Buffer) is read after the third word, causing the OERR (Overrun Error) bit to be set.

When setting up an Asynchronous Reception, follow these steps:

1. Initialize the SPBRG register for the appropriate baud rate. If a high-speed baud rate is desired, set bit BRGH (**Section 10.1 "USART Baud Rate Generator (BRG)"**).
2. Enable the asynchronous serial port by clearing bit SYNC and setting bit SPEN.
3. If interrupts are desired, then set enable bit RCIE.
4. If 9-bit reception is desired, then set bit RX9.
5. Enable the reception by setting bit CREN.
6. Flag bit RCIF will be set when reception is complete and an interrupt will be generated if enable bit RCIE is set.
7. Read the RCSTA register to get the ninth bit (if enabled) and determine if any error occurred during reception.
8. Read the 8-bit received data by reading the RCREG register.
9. If any error occurred, clear the error by clearing enable bit CREN.
10. If using interrupts, ensure that GIE and PEIE (bits 7 and 6) of the INTCON register are set.

TABLE 10-6: REGISTERS ASSOCIATED WITH ASYNCHRONOUS RECEPTION

Address	Name	Bit 7	Bit 6	Bit 5	Bit 4	Bit 3	Bit 2	Bit 1	Bit 0	Value on: POR, BOR	Value on all other Resets
0Bh, 8Bh, 10Bh,18Bh	INTCON	GIE	PEIE	TMR0IE	INTE	RBIE	TMR0IF	INTF	R0IF	0000 000x	0000 000u
0Ch	PIR1	PSPIF(1)	ADIF	RCIF	TXIF	SSPIF	CCP1IF	TMR2IF	TMR1IF	0000 0000	0000 0000
18h	RCSTA	SPEN	RX9	SREN	CREN	—	FERR	OERR	RX9D	0000 -00x	0000 -00x
1Ah	RCREG	USART Receive Register								0000 0000	0000 0000
8Ch	PIE1	PSPIE(1)	ADIE	RCIE	TXIE	SSPIE	CCP1IE	TMR2IE	TMR1IE	0000 0000	0000 0000
98h	TXSTA	CSRC	TX9	TXEN	SYNC	—	BRGH	TRMT	TX9D	0000 -010	0000 -010
99h	SPBRG	Baud Rate Generator Register								0000 0000	0000 0000

Legend: x = unknown, - = unimplemented locations read as '0'. Shaded cells are not used for asynchronous reception.
Note 1: Bits PSPIE and PSPIF are reserved on 28-pin devices; always maintain these bits clear.

© 2001-2013 Microchip Technology Inc.

10.2.3 SETTING UP 9-BIT MODE WITH ADDRESS DETECT

When setting up an Asynchronous Reception with address detect enabled:

- Initialize the SPBRG register for the appropriate baud rate. If a high-speed baud rate is desired, set bit BRGH.
- Enable the asynchronous serial port by clearing bit SYNC and setting bit SPEN.
- If interrupts are desired, then set enable bit RCIE.
- Set bit RX9 to enable 9-bit reception.
- Set ADDEN to enable address detect.
- Enable the reception by setting enable bit CREN.
- Flag bit RCIF will be set when reception is complete, and an interrupt will be generated if enable bit RCIE was set.
- Read the RCSTA register to get the ninth bit and determine if any error occurred during reception.
- Read the 8-bit received data by reading the RCREG register to determine if the device is being addressed.
- If any error occurred, clear the error by clearing enable bit CREN.
- If the device has been addressed, clear the ADDEN bit to allow data bytes and address bytes to be read into the receive buffer and interrupt the CPU.

FIGURE 10-6: USART RECEIVE BLOCK DIAGRAM

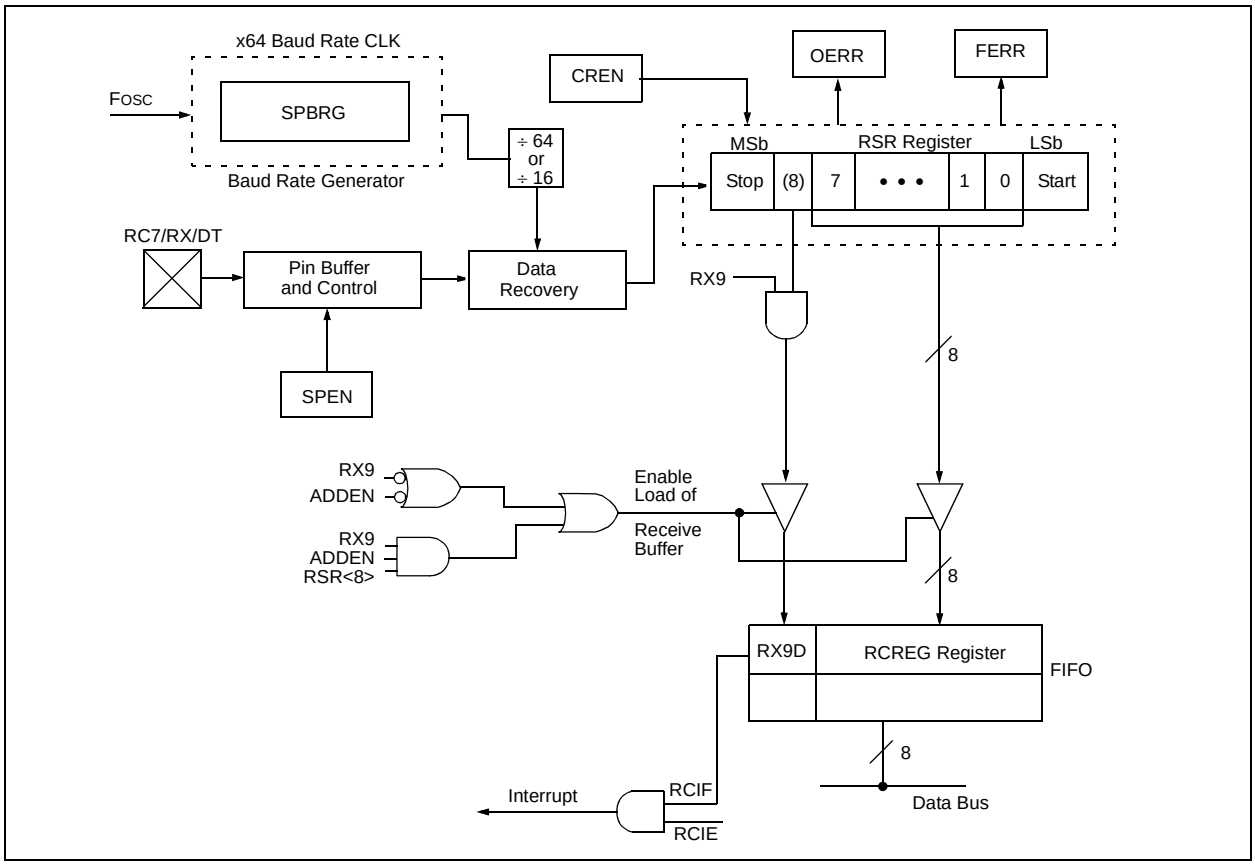

FIGURE 10-7: ASYNCHRONOUS RECEPTION WITH ADDRESS DETECT

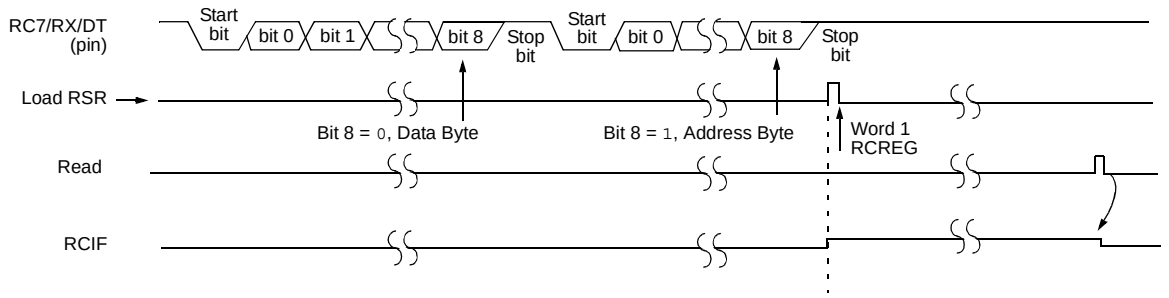

Note: This timing diagram shows a data byte followed by an address byte. The data byte is not read into the RCREG (Receive Buffer) because ADDEN = 1.

FIGURE 10-8: ASYNCHRONOUS RECEPTION WITH ADDRESS BYTE FIRST

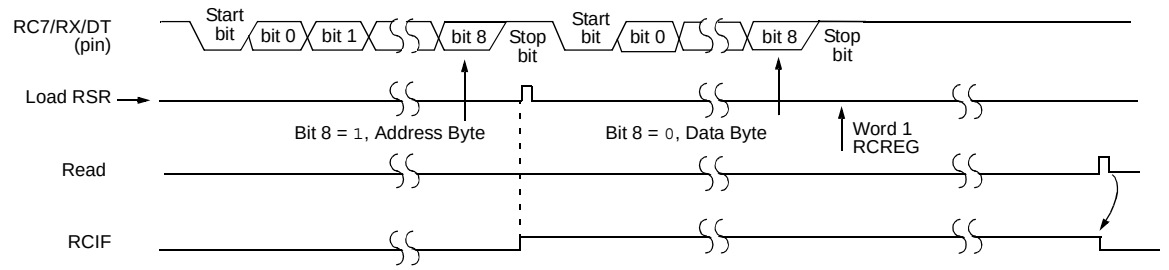

Note: This timing diagram shows a data byte followed by an address byte. The data byte is not read into the RCREG (Receive Buffer) because ADDEN was not updated and still = 0.

TABLE 10-7: REGISTERS ASSOCIATED WITH ASYNCHRONOUS RECEPTION

Address	Name	Bit 7	Bit 6	Bit 5	Bit 4	Bit 3	Bit 2	Bit 1	Bit 0	Value on: POR, BOR	Value on all other Resets
0Bh, 8Bh, 10Bh,18Bh	INTCON	GIE	PEIE	TMR0IE	INTE	RBIE	TMR0IF	INTF	R0IF	0000 000x	0000 000u
0Ch	PIR1	PSPIF(1)	ADIF	RCIF	TXIF	SSPIF	CCP1IF	TMR2IF	TMR1IF	0000 0000	0000 0000
18h	RCSTA	SPEN	RX9	SREN	CREN	ADDEN	FERR	OERR	RX9D	0000 000x	0000 000x
1Ah	RCREG	USART Receive Register								0000 0000	0000 0000
8Ch	PIE1	PSPIE(1)	ADIE	RCIE	TXIE	SSPIE	CCP1IE	TMR2IE	TMR1IE	0000 0000	0000 0000
98h	TXSTA	CSRC	TX9	TXEN	SYNC	—	BRGH	TRMT	TX9D	0000 -010	0000 -010
99h	SPBRG	Baud Rate Generator Register								0000 0000	0000 0000

Legend: x = unknown, - = unimplemented locations read as '0'. Shaded cells are not used for asynchronous reception.

Note 1: Bits PSPIE and PSPIF are reserved on 28-pin devices; always maintain these bits clear.

© 2001-2013 Microchip Technology Inc.

10.3 USART Synchronous Master Mode

In Synchronous Master mode, the data is transmitted in a half-duplex manner (i.e., transmission and reception do not occur at the same time). When transmitting data, the reception is inhibited and vice versa. Synchronous mode is entered by setting bit, SYNC (TXSTA<4>). In addition, enable bit, SPEN (RCSTA<7>), is set in order to configure the RC6/TX/CK and RC7/RX/DT I/O pins to CK (clock) and DT (data) lines, respectively. The Master mode indicates that the processor transmits the master clock on the CK line. The Master mode is entered by setting bit, CSRC (TXSTA<7>).

10.3.1 USART SYNCHRONOUS MASTER TRANSMISSION

The USART transmitter block diagram is shown in Figure 10-6. The heart of the transmitter is the Transmit (Serial) Shift Register (TSR). The shift register obtains its data from the Read/Write Transmit Buffer register, TXREG. The TXREG register is loaded with data in software. The TSR register is not loaded until the last bit has been transmitted from the previous load. As soon as the last bit is transmitted, the TSR is loaded with new data from the TXREG (if available). Once the TXREG register transfers the data to the TSR register (occurs in one TCYCLE), the TXREG is empty and interrupt bit, TXIF (PIR1<4>), is set. The interrupt can be enabled/disabled by setting/clearing enable bit TXIE (PIE1<4>). Flag bit TXIF will be set regardless of the state of enable bit TXIE and cannot be cleared in software. It will reset only when new data is loaded into the TXREG register. While flag bit TXIF indicates the status of the TXREG register, another bit, TRMT (TXSTA<1>), shows the status of the TSR register. TRMT is a read-only bit which is set when the TSR is empty. No interrupt logic is tied to this bit so the user has to poll this bit in order to determine if the TSR register is empty. The TSR is not mapped in data memory so it is not available to the user.

Transmission is enabled by setting enable bit, TXEN (TXSTA<5>). The actual transmission will not occur until the TXREG register has been loaded with data. The first data bit will be shifted out on the next available rising edge of the clock on the CK line. Data out is stable around the falling edge of the synchronous clock (Figure 10-9). The transmission can also be started by first loading the TXREG register and then setting bit TXEN (Figure 10-10). This is advantageous when slow baud rates are selected since the BRG is kept in Reset when bits TXEN, CREN and SREN are clear. Setting enable bit TXEN will start the BRG, creating a shift clock immediately. Normally, when transmission is first started, the TSR register is empty so a transfer to the TXREG register will result in an immediate transfer to TSR, resulting in an empty TXREG. Back-to-back transfers are possible.

Clearing enable bit TXEN during a transmission will cause the transmission to be aborted and will reset the transmitter. The DT and CK pins will revert to high-impedance. If either bit CREN or bit SREN is set during a transmission, the transmission is aborted and the DT pin reverts to a high-impedance state (for a reception). The CK pin will remain an output if bit CSRC is set (internal clock). The transmitter logic, however, is not reset, although it is disconnected from the pins. In order to reset the transmitter, the user has to clear bit TXEN. If bit SREN is set (to interrupt an on-going transmission and receive a single word), then after the single word is received, bit SREN will be cleared and the serial port will revert back to transmitting since bit TXEN is still set. The DT line will immediately switch from High-Impedance Receive mode to transmit and start driving. To avoid this, bit TXEN should be cleared.

In order to select 9-bit transmission, the TX9 (TXSTA<6>) bit should be set and the ninth bit should be written to bit TX9D (TXSTA<0>). The ninth bit must be written before writing the 8-bit data to the TXREG register. This is because a data write to the TXREG can result in an immediate transfer of the data to the TSR register (if the TSR is empty). If the TSR was empty and the TXREG was written before writing the “new” TX9D, the “present” value of bit TX9D is loaded.

Steps to follow when setting up a Synchronous Master Transmission:

1. Initialize the SPBRG register for the appropriate baud rate (**Section 10.1 “USART Baud Rate Generator (BRG)”**).
2. Enable the synchronous master serial port by setting bits SYNC, SPEN and CSRC.
3. If interrupts are desired, set enable bit TXIE.
4. If 9-bit transmission is desired, set bit TX9.
5. Enable the transmission by setting bit TXEN.
6. If 9-bit transmission is selected, the ninth bit should be loaded in bit TX9D.
7. Start transmission by loading data to the TXREG register.
8. If using interrupts, ensure that GIE and PEIE (bits 7 and 6) of the INTCON register are set.

TABLE 10-8: REGISTERS ASSOCIATED WITH SYNCHRONOUS MASTER TRANSMISSION

Address	Name	Bit 7	Bit 6	Bit 5	Bit 4	Bit 3	Bit 2	Bit 1	Bit 0	Value on: POR, BOR	Value on all other Resets
0Bh, 8Bh, 10Bh,18Bh	INTCON	GIE	PEIE	TMR0IE	INTE	RBIE	TMR0IF	INTF	R0IF	0000 000x	0000 000u
0Ch	PIR1	PSPIF(1)	ADIF	RCIF	TXIF	SSPIF	CCP1IF	TMR2IF	TMR1IF	0000 0000	0000 0000
18h	RCSTA	SPEN	RX9	SREN	CREN	—	FERR	OERR	RX9D	0000 -00x	0000 -00x
19h	TXREG	USART Transmit Register								0000 0000	0000 0000
8Ch	PIE1	PSPIE(1)	ADIE	RCIE	TXIE	SSPIE	CCP1IE	TMR2IE	TMR1IE	0000 0000	0000 0000
98h	TXSTA	CSRC	TX9	TXEN	SYNC	—	BRGH	TRMT	TX9D	0000 -010	0000 -010
99h	SPBRG	Baud Rate Generator Register								0000 0000	0000 0000

Legend: x = unknown, - = unimplemented, read as '0'. Shaded cells are not used for synchronous master transmission.

Note 1: Bits PSPIE and PSPIF are reserved on 28-pin devices; always maintain these bits clear.

FIGURE 10-9: SYNCHRONOUS TRANSMISSION

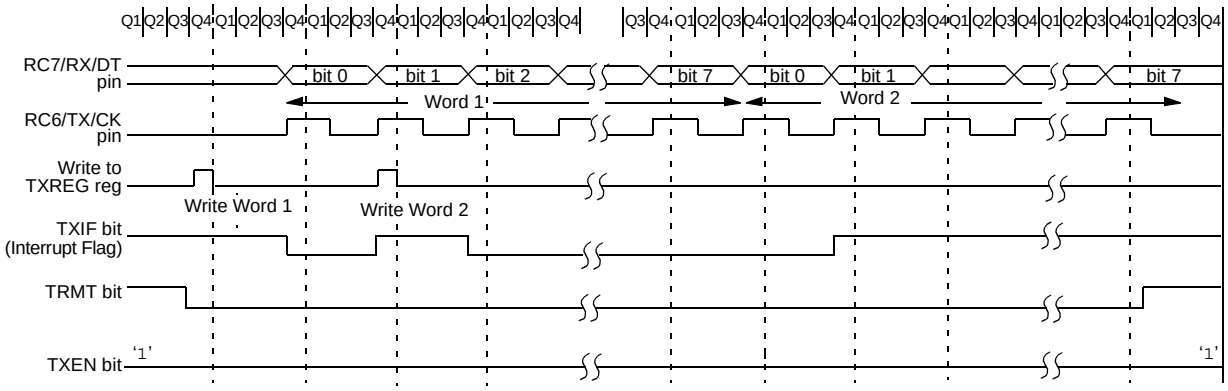

Note: Sync Master mode; SPBRG = 0. Continuous transmission of two 8-bit words.

FIGURE 10-10: SYNCHRONOUS TRANSMISSION (THROUGH TXEN)

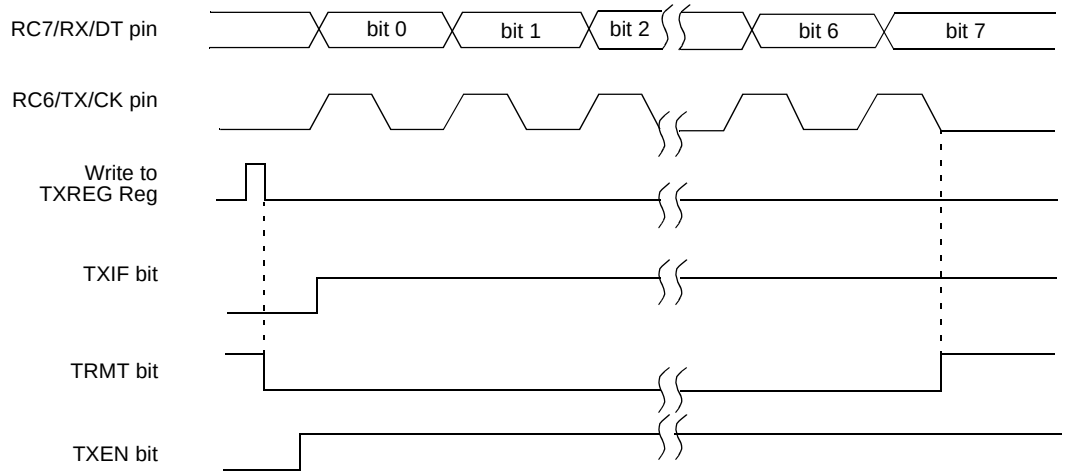

© 2001-2013 Microchip Technology Inc.

10.3.2 USART SYNCHRONOUS MASTER RECEPTION

Once Synchronous mode is selected, reception is enabled by setting either enable bit, SREN (RCSTA<5>), or enable bit, CREN (RCSTA<4>). Data is sampled on the RC7/RX/DT pin on the falling edge of the clock. If enable bit SREN is set, then only a single word is received. If enable bit CREN is set, the reception is continuous until CREN is cleared. If both bits are set, CREN takes precedence. After clocking the last bit, the received data in the Receive Shift Register (RSR) is transferred to the RCREG register (if it is empty). When the transfer is complete, interrupt flag bit, RCIF (PIR1<5>), is set. The actual interrupt can be enabled/disabled by setting/clearing enable bit, RCIE (PIE1<5>). Flag bit RCIF is a read-only bit which is reset by the hardware. In this case, it is reset when the RCREG register has been read and is empty. The RCREG is a double-buffered register (i.e., it is a two-deep FIFO). It is possible for two bytes of data to be received and transferred to the RCREG FIFO and a third byte to begin shifting into the RSR register. On the clocking of the last bit of the third byte, if the RCREG register is still full, then Overrun Error bit, OERR (RCSTA<1>), is set. The word in the RSR will be lost. The RCREG register can be read twice to retrieve the two bytes in the FIFO. Bit OERR has to be cleared in software (by clearing bit CREN). If bit OERR is set, transfers from the RSR to the RCREG are inhibited so it is essential to clear bit OERR if it is set. The ninth receive bit is buffered the same way as the receive data. Reading the RCREG register will load bit RX9D with a new value, therefore, it is essential for the user to read the RCSTA register before reading RCREG in order not to lose the old RX9D information.

When setting up a Synchronous Master Reception:

1. Initialize the SPBRG register for the appropriate baud rate (**Section 10.1 “USART Baud Rate Generator (BRG)”**).
2. Enable the synchronous master serial port by setting bits SYNC, SPEN and CSRC.
3. Ensure bits CREN and SREN are clear.
4. If interrupts are desired, then set enable bit RCIE.
5. If 9-bit reception is desired, then set bit RX9.
6. If a single reception is required, set bit SREN. For continuous reception, set bit CREN.
7. Interrupt flag bit RCIF will be set when reception is complete and an interrupt will be generated if enable bit RCIE was set.
8. Read the RCSTA register to get the ninth bit (if enabled) and determine if any error occurred during reception.
9. Read the 8-bit received data by reading the RCREG register.
10. If any error occurred, clear the error by clearing bit CREN.
11. If using interrupts, ensure that GIE and PEIE (bits 7 and 6) of the INTCON register are set.

TABLE 10-9: REGISTERS ASSOCIATED WITH SYNCHRONOUS MASTER RECEPTION

Address	Name	Bit 7	Bit 6	Bit 5	Bit 4	Bit 3	Bit 2	Bit 1	Bit 0	Value on: POR, BOR	Value on all other Resets
0Bh, 8Bh, 10Bh,18Bh	INTCON	GIE	PEIE	TMR0IE	INTE	RBIE	TMR0IF	INTF	R0IF	0000 000x	0000 000u
0Ch	PIR1	PSPIF(1)	ADIF	RCIF	TXIF	SSPIF	CCP1IF	TMR2IF	TMR1IF	0000 0000	0000 0000
18h	RCSTA	SPEN	RX9	SREN	CREN	—	FERR	OERR	RX9D	0000 -00x	0000 -00x
1Ah	RCREG	USART Receive Register								0000 0000	0000 0000
8Ch	PIE1	PSPIE(1)	ADIE	RCIE	TXIE	SSPIE	CCP1IE	TMR2IE	TMR1IE	0000 0000	0000 0000
98h	TXSTA	CSRC	TX9	TXEN	SYNC	—	BRGH	TRMT	TX9D	0000 -010	0000 -010
99h	SPBRG	Baud Rate Generator Register								0000 0000	0000 0000

Legend: x = unknown, - = unimplemented, read as ‘0’. Shaded cells are not used for synchronous master reception.

Note 1: Bits PSPIE and PSPIF are reserved on 28-pin devices; always maintain these bits clear.

FIGURE 10-11: SYNCHRONOUS RECEPTION (MASTER MODE, SREN)

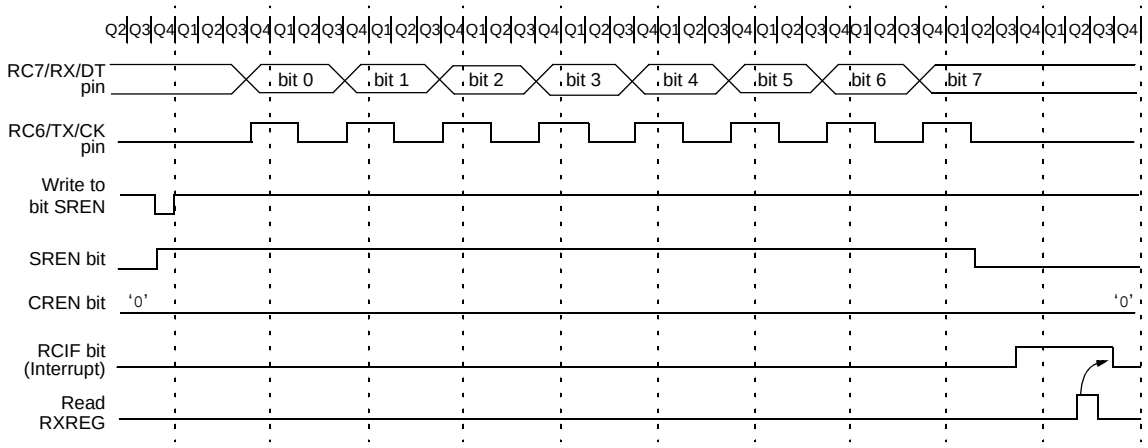

Note: Timing diagram demonstrates Sync Master mode with bit SREN = `1` and bit BRG = `0`.

10.4 USART Synchronous Slave Mode

Synchronous Slave mode differs from the Master mode in the fact that the shift clock is supplied externally at the RC6/TX/CK pin (instead of being supplied internally in Master mode). This allows the device to transfer or receive data while in Sleep mode. Slave mode is entered by clearing bit, CSRC (TXSTA<7>).

10.4.1 USART SYNCHRONOUS SLAVE TRANSMIT

The operation of the Synchronous Master and Slave modes is identical, except in the case of the Sleep mode.

If two words are written to the TXREG and then the `SLEEP` instruction is executed, the following will occur:

a) The first word will immediately transfer to the TSR register and transmit.
b) The second word will remain in TXREG register.
c) Flag bit TXIF will not be set.
d) When the first word has been shifted out of TSR, the TXREG register will transfer the second word to the TSR and flag bit TXIF will now be set.
e) If enable bit TXIE is set, the interrupt will wake the chip from Sleep and if the global interrupt is enabled, the program will branch to the interrupt vector (0004h).

When setting up a Synchronous Slave Transmission, follow these steps:

1. Enable the synchronous slave serial port by setting bits SYNC and SPEN and clearing bit CSRC.
2. Clear bits CREN and SREN.
3. If interrupts are desired, then set enable bit TXIE.
4. If 9-bit transmission is desired, then set bit TX9.
5. Enable the transmission by setting enable bit TXEN.
6. If 9-bit transmission is selected, the ninth bit should be loaded in bit TX9D.
7. Start transmission by loading data to the TXREG register.
8. If using interrupts, ensure that GIE and PEIE (bits 7 and 6) of the INTCON register are set.

© 2001-2013 Microchip Technology Inc.

TABLE 10-10: REGISTERS ASSOCIATED WITH SYNCHRONOUS SLAVE TRANSMISSION

Address	Name	Bit 7	Bit 6	Bit 5	Bit 4	Bit 3	Bit 2	Bit 1	Bit 0	Value on: POR, BOR	Value on all other Resets
0Bh, 8Bh, 10Bh,18Bh	INTCON	GIE	PEIE	TMR0IE	INTE	RBIE	TMR0IF	INTF	R0IF	0000 000x	0000 000u
0Ch	PIR1	PSPIF(1)	ADIF	RCIF	TXIF	SSPIF	CCP1IF	TMR2IF	TMR1IF	0000 0000	0000 0000
18h	RCSTA	SPEN	RX9	SREN	CREN	ADDEN	FERR	OERR	RX9D	0000 000x	0000 000x
19h	TXREG	USART Transmit Register								0000 0000	0000 0000
8Ch	PIE1	PSPIE(1)	ADIE	RCIE	TXIE	SSPIE	CCP1IE	TMR2IE	TMR1IE	0000 0000	0000 0000
98h	TXSTA	CSRC	TX9	TXEN	SYNC	—	BRGH	TRMT	TX9D	0000 -010	0000 -010
99h	SPBRG	Baud Rate Generator Register								0000 0000	0000 0000

Legend: x = unknown, - = unimplemented, read as '0'. Shaded cells are not used for synchronous slave transmission.

Note 1: Bits PSPIE and PSPIF are reserved on 28-pin devices; always maintain these bits clear.

10.4.2 USART SYNCHRONOUS SLAVE RECEPTION

The operation of the Synchronous Master and Slave modes is identical, except in the case of the Sleep mode. Bit SREN is a "don't care" in Slave mode.

If receive is enabled by setting bit CREN prior to the SLEEP instruction, then a word may be received during Sleep. On completely receiving the word, the RSR register will transfer the data to the RCREG register and if enable bit RCIE bit is set, the interrupt generated will wake the chip from Sleep. If the global interrupt is enabled, the program will branch to the interrupt vector (0004h).

When setting up a Synchronous Slave Reception, follow these steps:

1. Enable the synchronous master serial port by setting bits SYNC and SPEN and clearing bit CSRC.
2. If interrupts are desired, set enable bit RCIE.
3. If 9-bit reception is desired, set bit RX9.
4. To enable reception, set enable bit CREN.
5. Flag bit RCIF will be set when reception is complete and an interrupt will be generated if enable bit RCIE was set.
6. Read the RCSTA register to get the ninth bit (if enabled) and determine if any error occurred during reception.
7. Read the 8-bit received data by reading the RCREG register.
8. If any error occurred, clear the error by clearing bit CREN.
9. If using interrupts, ensure that GIE and PEIE (bits 7 and 6) of the INTCON register are set.

TABLE 10-11: REGISTERS ASSOCIATED WITH SYNCHRONOUS SLAVE RECEPTION

Address	Name	Bit 7	Bit 6	Bit 5	Bit 4	Bit 3	Bit 2	Bit 1	Bit 0	Value on: POR, BOR	Value on all other Resets
0Bh, 8Bh, 10Bh,18Bh	INTCON	GIE	PEIE	TMR0IE	INTE	RBIE	TMR0IF	INTF	R0IF	0000 000x	0000 000u
0Ch	PIR1	PSPIF(1)	ADIF	RCIF	TXIF	SSPIF	CCP1IF	TMR2IF	TMR1IF	0000 0000	0000 0000
18h	RCSTA	SPEN	RX9	SREN	CREN	ADDEN	FERR	OERR	RX9D	0000 000x	0000 000x
1Ah	RCREG	USART Receive Register								0000 0000	0000 0000
8Ch	PIE1	PSPIE(1)	ADIE	RCIE	TXIE	SSPIE	CCP1IE	TMR2IE	TMR1IE	0000 0000	0000 0000
98h	TXSTA	CSRC	TX9	TXEN	SYNC	—	BRGH	TRMT	TX9D	0000 -010	0000 -010
99h	SPBRG	Baud Rate Generator Register								0000 0000	0000 0000

Legend: x = unknown, - = unimplemented, read as '0'. Shaded cells are not used for synchronous slave reception.

Note 1: Bits PSPIE and PSPIF are reserved on 28-pin devices, always maintain these bits clear.

NOTES:

© 2001-2013 Microchip Technology Inc.

11.0 ANALOG-TO-DIGITAL CONVERTER (A/D) MODULE

The Analog-to-Digital (A/D) Converter module has five inputs for the 28-pin devices and eight for the 40/44-pin devices.

The conversion of an analog input signal results in a corresponding 10-bit digital number. The A/D module has high and low-voltage reference input that is software selectable to some combination of VDD, VSS, RA2 or RA3.

The A/D converter has a unique feature of being able to operate while the device is in Sleep mode. To operate in Sleep, the A/D clock must be derived from the A/D's internal RC oscillator.

The A/D module has four registers. These registers are:

- A/D Result High Register (ADRESH)
- A/D Result Low Register (ADRESL)
- A/D Control Register 0 (ADCON0)
- A/D Control Register 1 (ADCON1)

The ADCON0 register, shown in Register 11-1, controls the operation of the A/D module. The ADCON1 register, shown in Register 11-2, configures the functions of the port pins. The port pins can be configured as analog inputs (RA3 can also be the voltage reference) or as digital I/O.

Additional information on using the A/D module can be found in the PIC® Mid-Range MCU Family Reference Manual (DS33023).

REGISTER 11-1: ADCON0 REGISTER (ADDRESS 1Fh)

R/W-0	R/W-0	R/W-0	R/W-0	R/W-0	R/W-0	U-0	R/W-0
ADCS1	ADCS0	CHS2	CHS1	CHS0	GO/$\overline{\text{DONE}}$	—	ADON
bit 7							bit 0

bit 7-6 **ADCS1:ADCS0:** A/D Conversion Clock Select bits (ADCON0 bits in **bold**)

ADCON1 <ADCS2>	ADCON0 <ADCS1:ADCS0>	Clock Conversion
0	**00**	FOSC/2
0	**01**	FOSC/8
0	**10**	FOSC/32
0	**11**	FRC (clock derived from the internal A/D RC oscillator)
1	**00**	FOSC/4
1	**01**	FOSC/16
1	**10**	FOSC/64
1	**11**	FRC (clock derived from the internal A/D RC oscillator)

bit 5-3 **CHS2:CHS0:** Analog Channel Select bits

000 = Channel 0 (AN0)
001 = Channel 1 (AN1)
010 = Channel 2 (AN2)
011 = Channel 3 (AN3)
100 = Channel 4 (AN4)
101 = Channel 5 (AN5)
110 = Channel 6 (AN6)
111 = Channel 7 (AN7)

Note: The PIC16F873A/876A devices only implement A/D channels 0 through 4; the unimplemented selections are reserved. Do not select any unimplemented channels with these devices.

bit 2 **GO/$\overline{\text{DONE}}$:** A/D Conversion Status bit

When ADON = 1:

1 = A/D conversion in progress (setting this bit starts the A/D conversion which is automatically cleared by hardware when the A/D conversion is complete)
0 = A/D conversion not in progress

bit 1 **Unimplemented:** Read as '0'

bit 0 **ADON:** A/D On bit

1 = A/D converter module is powered up
0 = A/D converter module is shut-off and consumes no operating current

Legend:			
R = Readable bit	W = Writable bit	U = Unimplemented bit, read as '0'	
- n = Value at POR	'1' = Bit is set	'0' = Bit is cleared	x = Bit is unknown

REGISTER 11-2: ADCON1 REGISTER (ADDRESS 9Fh)

R/W-0	R/W-0	U-0	U-0	R/W-0	R/W-0	R/W-0	R/W-0
ADFM	ADCS2	—	—	PCFG3	PCFG2	PCFG1	PCFG0
bit 7							bit 0

bit 7 **ADFM:** A/D Result Format Select bit
1 = Right justified. Six (6) Most Significant bits of ADRESH are read as '0'.
0 = Left justified. Six (6) Least Significant bits of ADRESL are read as '0'.

bit 6 **ADCS2:** A/D Conversion Clock Select bit (ADCON1 bits in shaded area and in **bold**)

ADCON1 <ADCS2>	ADCON0 <ADCS1:ADCS0>	Clock Conversion
0	00	FOSC/2
0	01	FOSC/8
0	10	FOSC/32
0	11	FRC (clock derived from the internal A/D RC oscillator)
1	00	FOSC/4
1	01	FOSC/16
1	10	FOSC/64
1	11	FRC (clock derived from the internal A/D RC oscillator)

bit 5-4 **Unimplemented:** Read as '0'

bit 3-0 **PCFG3:PCFG0:** A/D Port Configuration Control bits

PCFG <3:0>	AN7	AN6	AN5	AN4	AN3	AN2	AN1	AN0	VREF+	VREF-	C/R
0000	A	A	A	A	A	A	A	A	VDD	VSS	8/0
0001	A	A	A	A	VREF+	A	A	A	AN3	VSS	7/1
0010	D	D	D	A	A	A	A	A	VDD	VSS	5/0
0011	D	D	D	A	VREF+	A	A	A	AN3	VSS	4/1
0100	D	D	D	D	A	D	A	A	VDD	VSS	3/0
0101	D	D	D	D	VREF+	D	A	A	AN3	VSS	2/1
011x	D	D	D	D	D	D	D	D	—	—	0/0
1000	A	A	A	A	VREF+	VREF-	A	A	AN3	AN2	6/2
1001	D	D	A	A	A	A	A	A	VDD	VSS	6/0
1010	D	D	A	A	VREF+	A	A	A	AN3	VSS	5/1
1011	D	D	A	A	VREF+	VREF-	A	A	AN3	AN2	4/2
1100	D	D	D	A	VREF+	VREF-	A	A	AN3	AN2	3/2
1101	D	D	D	D	VREF+	VREF-	A	A	AN3	AN2	2/2
1110	D	D	D	D	D	D	D	A	VDD	VSS	1/0
1111	D	D	D	D	VREF+	VREF-	D	A	AN3	AN2	1/2

A = Analog input D = Digital I/O
C/R = # of analog input channels/# of A/D voltage references

Legend:			
R = Readable bit	W = Writable bit	U = Unimplemented bit, read as '0'	
- n = Value at POR	'1' = Bit is set	'0' = Bit is cleared	x = Bit is unknown

Note: On any device Reset, the port pins that are multiplexed with analog functions (ANx) are forced to be an analog input.

© 2001-2013 Microchip Technology Inc.

The ADRESH:ADRESL registers contain the 10-bit result of the A/D conversion. When the A/D conversion is complete, the result is loaded into this A/D Result register pair, the GO/$\overline{\text{DONE}}$ bit (ADCON0<2>) is cleared and the A/D interrupt flag bit ADIF is set. The block diagram of the A/D module is shown in Figure 11-1.

After the A/D module has been configured as desired, the selected channel must be acquired before the conversion is started. The analog input channels must have their corresponding TRIS bits selected as inputs.

To determine sample time, see **Section 11.1 "A/D Acquisition Requirements"**. After this acquisition time has elapsed, the A/D conversion can be started.

To do an A/D Conversion, follow these steps:

1. Configure the A/D module:
   - Configure analog pins/voltage reference and digital I/O (ADCON1)
   - Select A/D input channel (ADCON0)
   - Select A/D conversion clock (ADCON0)
   - Turn on A/D module (ADCON0)
2. Configure A/D interrupt (if desired):
   - Clear ADIF bit
   - Set ADIE bit
   - Set PEIE bit
   - Set GIE bit
3. Wait the required acquisition time.
4. Start conversion:
   - Set GO/$\overline{\text{DONE}}$ bit (ADCON0)
5. Wait for A/D conversion to complete by either:
   - Polling for the GO/$\overline{\text{DONE}}$ bit to be cleared (interrupts disabled); OR
   - Waiting for the A/D interrupt
6. Read A/D Result register pair (ADRESH:ADRESL), clear bit ADIF if required.
7. For the next conversion, go to step 1 or step 2 as required. The A/D conversion time per bit is defined as T_{AD}.

FIGURE 11-1: A/D BLOCK DIAGRAM

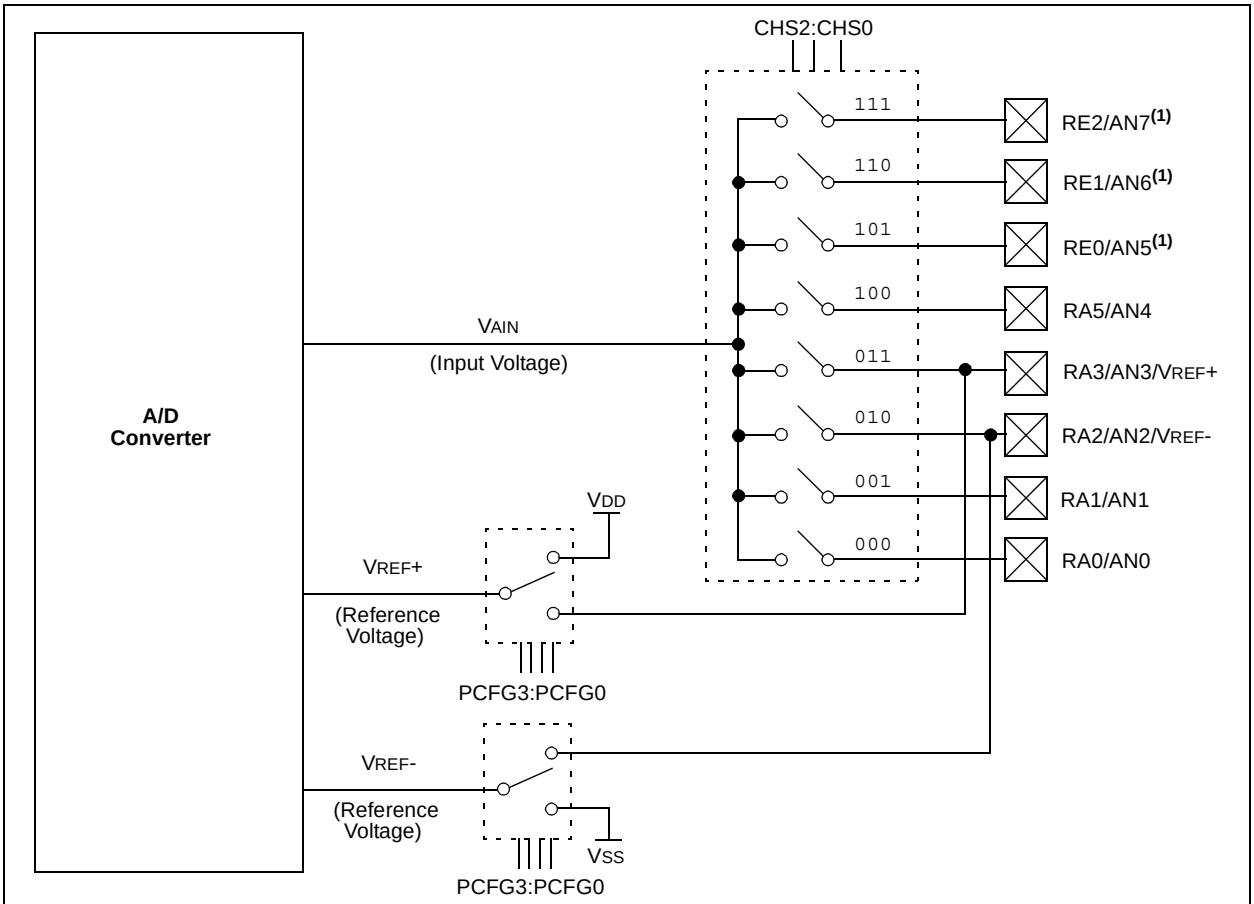

Note 1: Not available on 28-pin devices.

11.1 A/D Acquisition Requirements

For the A/D converter to meet its specified accuracy, the charge holding capacitor (C_{HOLD}) must be allowed to fully charge to the input channel voltage level. The analog input model is shown in Figure 11-2. The source impedance (R_S) and the internal sampling switch impedance (R_{SS}) directly affect the time required to charge the capacitor C_{HOLD}. The sampling switch (R_{SS}) impedance varies over the device voltage (V_{DD}); see Figure 11-2. **The maximum recommended impedance for analog sources is 2.5 kΩ.** As the impedance is decreased, the acquisition time may be decreased. After the analog input channel is selected (changed), this acquisition must be done before the conversion can be started.

To calculate the minimum acquisition time, Equation 11-1 may be used. This equation assumes that 1/2 LSb error is used (1024 steps for the A/D). The 1/2 LSb error is the maximum error allowed for the A/D to meet its specified resolution.

To calculate the minimum acquisition time, T_{ACQ}, see the PIC® Mid-Range MCU Family Reference Manual (DS33023).

EQUATION 11-1: ACQUISITION TIME

$$
\begin{aligned}
T_{ACQ} &= \text{Amplifier Settling Time + Hold Capacitor Charging Time + Temperature Coefficient} \\
&= T_{AMP} + T_C + T_{COFF} \\
&= 2\ \mu s + T_C + [(\text{Temperature} - 25°C)(0.05\ \mu s/°C)] \\
T_C &= C_{HOLD}(R_{IC} + R_{SS} + R_S)\ \text{In}(1/2047) \\
&= -120\ \text{pF}\ (1\ k\Omega + 7\ k\Omega + 10\ k\Omega)\ \text{In}(0.0004885) \\
&= 16.47\ \mu s \\
T_{ACQ} &= 2\ \mu s + 16.47\ \mu s + [(50°C - 25°C)(0.05\ \mu s/°C) \\
&= 19.72\ \mu s
\end{aligned}
$$

Note 1: The reference voltage (V_{REF}) has no effect on the equation since it cancels itself out.

2: The charge holding capacitor (C_{HOLD}) is not discharged after each conversion.

3: The maximum recommended impedance for analog sources is 2.5 kΩ. This is required to meet the pin leakage specification.

FIGURE 11-2: ANALOG INPUT MODEL

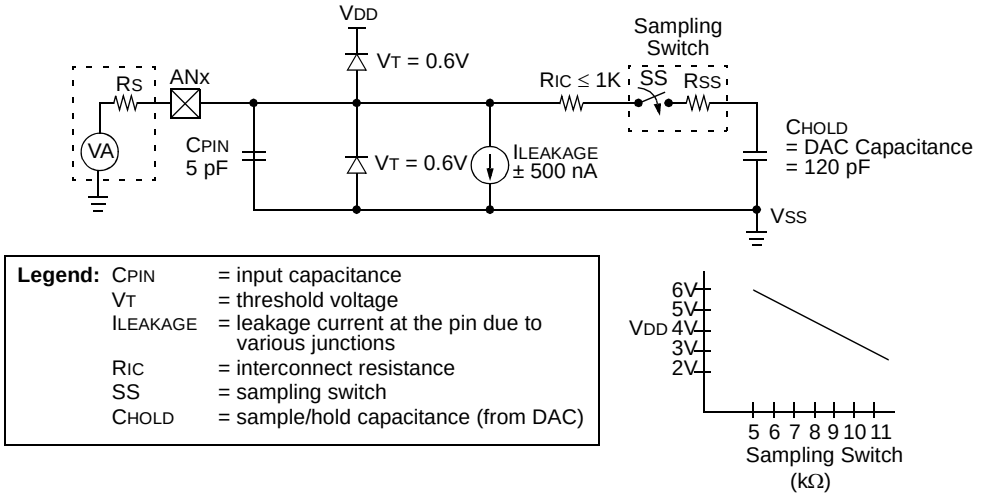

Legend:
- C_{PIN} = input capacitance
- V_T = threshold voltage
- $I_{LEAKAGE}$ = leakage current at the pin due to various junctions
- R_{IC} = interconnect resistance
- SS = sampling switch
- C_{HOLD} = sample/hold capacitance (from DAC)

© 2001-2013 Microchip Technology Inc.

11.2 Selecting the A/D Conversion Clock

The A/D conversion time per bit is defined as TAD. The A/D conversion requires a minimum 12 TAD per 10-bit conversion. The source of the A/D conversion clock is software selected. The seven possible options for TAD are:

- 2 TOSC
- 4 TOSC
- 8 TOSC
- 16 TOSC
- 32 TOSC
- 64 TOSC
- Internal A/D module RC oscillator (2-6 μs)

For correct A/D conversions, the A/D conversion clock (TAD) must be selected to ensure a minimum TAD time of 1.6 μs.

Table 11-1 shows the resultant TAD times derived from the device operating frequencies and the A/D clock source selected.

11.3 Configuring Analog Port Pins

The ADCON1 and TRIS registers control the operation of the A/D port pins. The port pins that are desired as analog inputs must have their corresponding TRIS bits set (input). If the TRIS bit is cleared (output), the digital output level (VOH or VOL) will be converted.

The A/D operation is independent of the state of the CHS2:CHS0 bits and the TRIS bits.

Note 1: When reading the port register, any pin configured as an analog input channel will read as cleared (a low level). Pins configured as digital inputs will convert an analog input. Analog levels on a digitally configured input will not affect the conversion accuracy.

2: Analog levels on any pin that is defined as a digital input (including the AN7:AN0 pins) may cause the input buffer to consume current that is out of the device specifications.

TABLE 11-1: TAD vs. MAXIMUM DEVICE OPERATING FREQUENCIES (STANDARD DEVICES (F))

AD Clock Source (TAD)		Maximum Device Frequency
Operation	**ADCS2:ADCS1:ADCS0**	
2 TOSC	000	1.25 MHz
4 TOSC	100	2.5 MHz
8 TOSC	001	5 MHz
16 TOSC	101	10 MHz
32 TOSC	010	20 MHz
64 TOSC	110	20 MHz
RC(1, 2, 3)	x11	**(Note 1)**

Note 1: The RC source has a typical TAD time of 4 μs but can vary between 2-6 μs.

2: When the device frequencies are greater than 1 MHz, the RC A/D conversion clock source is only recommended for Sleep operation.

3: For extended voltage devices (LF), please refer to **Section 17.0 “Electrical Characteristics”**.

11.4 A/D Conversions

Clearing the GO/$\overline{\text{DONE}}$ bit during a conversion will abort the current conversion. The A/D Result register pair will NOT be updated with the partially completed A/D conversion sample. That is, the ADRESH:ADRESL registers will continue to contain the value of the last completed conversion (or the last value written to the ADRESH:ADRESL registers). After the A/D conversion is aborted, the next acquisition on the selected channel is automatically started. The GO/$\overline{\text{DONE}}$ bit can then be set to start the conversion.

In Figure 11-3, after the GO bit is set, the first time segment has a minimum of T_{CY} and a maximum of T_{AD}.

Note:	The GO/$\overline{\text{DONE}}$ bit should **NOT** be set in the same instruction that turns on the A/D.

FIGURE 11-3: A/D CONVERSION T_{AD} CYCLES

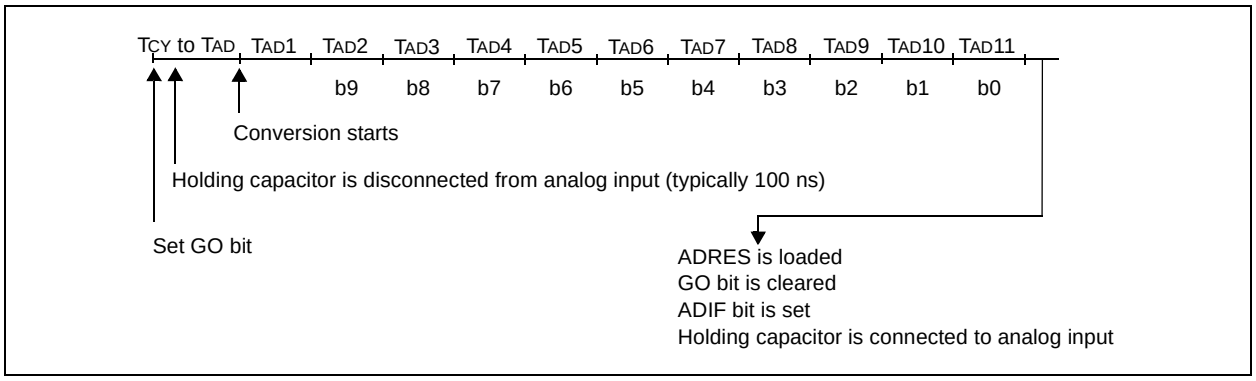

11.4.1 A/D RESULT REGISTERS

The ADRESH:ADRESL register pair is the location where the 10-bit A/D result is loaded at the completion of the A/D conversion. This register pair is 16 bits wide. The A/D module gives the flexibility to left or right justify the 10-bit result in the 16-bit result register. The A/D Format Select bit (ADFM) controls this justification. Figure 11-4 shows the operation of the A/D result justification. The extra bits are loaded with '0's. When an A/D result will not overwrite these locations (A/D disable), these registers may be used as two general purpose 8-bit registers.

FIGURE 11-4: A/D RESULT JUSTIFICATION

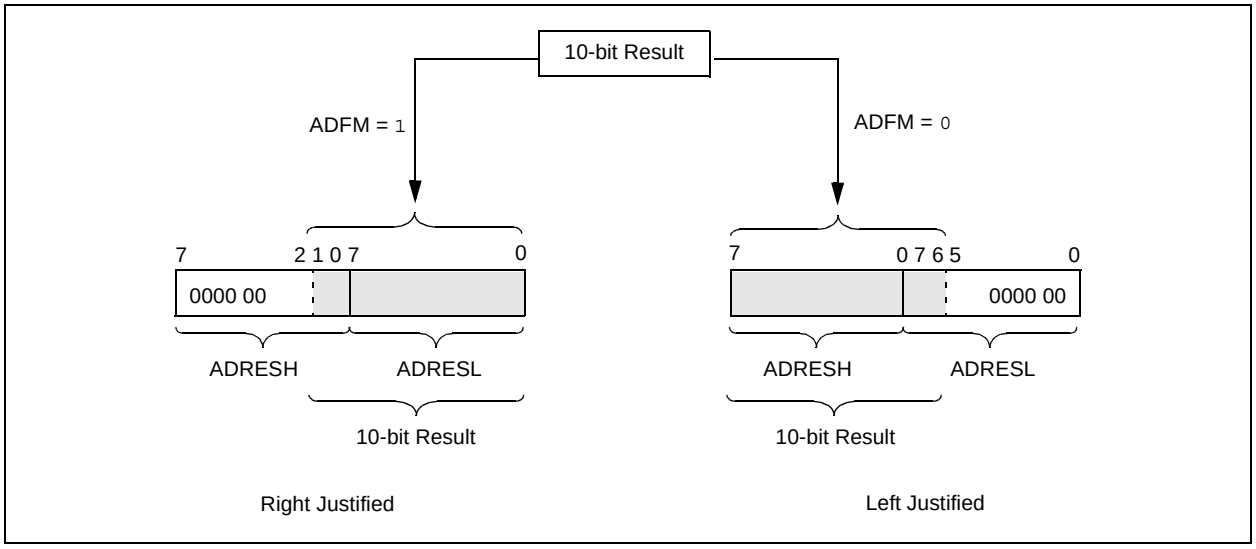

© 2001-2013 Microchip Technology Inc.

11.5 A/D Operation During Sleep

The A/D module can operate during Sleep mode. This requires that the A/D clock source be set to RC (ADCS1:ADCS0 = 11). When the RC clock source is selected, the A/D module waits one instruction cycle before starting the conversion. This allows the SLEEP instruction to be executed which eliminates all digital switching noise from the conversion. When the conversion is completed, the GO/$\overline{\text{DONE}}$ bit will be cleared and the result loaded into the ADRES register. If the A/D interrupt is enabled, the device will wake-up from Sleep. If the A/D interrupt is not enabled, the A/D module will then be turned off, although the ADON bit will remain set.

When the A/D clock source is another clock option (not RC), a SLEEP instruction will cause the present conversion to be aborted and the A/D module to be turned off, though the ADON bit will remain set.

Turning off the A/D places the A/D module in its lowest current consumption state.

> **Note:** For the A/D module to operate in Sleep, the A/D clock source must be set to RC (ADCS1:ADCS0 = 11). To allow the conversion to occur during Sleep, ensure the SLEEP instruction immediately follows the instruction that sets the GO/$\overline{\text{DONE}}$ bit.

11.6 Effects of a Reset

A device Reset forces all registers to their Reset state. This forces the A/D module to be turned off and any conversion is aborted. All A/D input pins are configured as analog inputs.

The value that is in the ADRESH:ADRESL registers is not modified for a Power-on Reset. The ADRESH:ADRESL registers will contain unknown data after a Power-on Reset.

TABLE 11-2: REGISTERS/BITS ASSOCIATED WITH A/D

Address	Name	Bit 7	Bit 6	Bit 5	Bit 4	Bit 3	Bit 2	Bit 1	Bit 0	Value on POR, BOR	Value on MCLR, WDT
0Bh,8Bh, 10Bh,18Bh	INTCON	GIE	PEIE	TMR0IE	INTE	RBIE	TMR0IF	INTF	RBIF	0000 000x	0000 000u
0Ch	PIR1	PSPIF(1)	ADIF	RCIF	TXIF	SSPIF	CCP1IF	TMR2IF	TMR1IF	0000 0000	0000 0000
8Ch	PIE1	PSPIE(1)	ADIE	RCIE	TXIE	SSPIE	CCP1IE	TMR2IE	TMR1IE	0000 0000	0000 0000
1Eh	ADRESH	A/D Result Register High Byte								xxxx xxxx	uuuu uuuu
9Eh	ADRESL	A/D Result Register Low Byte								xxxx xxxx	uuuu uuuu
1Fh	ADCON0	ADCS1	ADCS0	CHS2	CHS1	CHS0	GO/$\overline{\text{DONE}}$	—	ADON	0000 00-0	0000 00-0
9Fh	ADCON1	ADFM	ADCS2	—	—	PCFG3	PCFG2	PCFG1	PCFG0	00-- 0000	00-- 0000
85h	TRISA	—	—	PORTA Data Direction Register						--11 1111	--11 1111
05h	PORTA	—	—	PORTA Data Latch when written: PORTA pins when read						--0x 0000	--0u 0000
89h(1)	TRISE	IBF	OBF	IBOV	PSPMODE	—	PORTE Data Direction bits			0000 -111	0000 -111
09h(1)	PORTE	—	—	—	—	—	RE2	RE1	RE0	---- -xxx	---- -uuu

Legend: x = unknown, u = unchanged, - = unimplemented, read as '0'. Shaded cells are not used for A/D conversion.

Note 1: These registers are not available on 28-pin devices.

NOTES:

© 2001-2013 Microchip Technology Inc.

12.0 COMPARATOR MODULE

The comparator module contains two analog comparators. The inputs to the comparators are multiplexed with I/O port pins RA0 through RA3, while the outputs are multiplexed to pins RA4 and RA5. The on-chip voltage reference (**Section 13.0 "Comparator Voltage Reference Module"**) can also be an input to the comparators.

The CMCON register (Register 12-1) controls the comparator input and output multiplexers. A block diagram of the various comparator configurations is shown in Figure 12-1.

REGISTER 12-1: CMCON REGISTER

R-0	R-0	R/W-0	R/W-0	R/W-0	R/W-1	R/W-1	R/W-1
C2OUT	C1OUT	C2INV	C1INV	CIS	CM2	CM1	CM0
bit 7							bit 0

bit 7 **C2OUT**: Comparator 2 Output bit
When C2INV = 0:
1 = C2 V_{IN}+ > C2 V_{IN}-
0 = C2 V_{IN}+ < C2 V_{IN}-
When C2INV = 1:
1 = C2 V_{IN}+ < C2 V_{IN}-
0 = C2 V_{IN}+ > C2 V_{IN}-

bit 6 **C1OUT**: Comparator 1 Output bit
When C1INV = 0:
1 = C1 V_{IN}+ > C1 V_{IN}-
0 = C1 V_{IN}+ < C1 V_{IN}-
When C1INV = 1:
1 = C1 V_{IN}+ < C1 V_{IN}-
0 = C1 V_{IN}+ > C1 V_{IN}-

bit 5 **C2INV**: Comparator 2 Output Inversion bit
1 = C2 output inverted
0 = C2 output not inverted

bit 4 **C1INV**: Comparator 1 Output Inversion bit
1 = C1 output inverted
0 = C1 output not inverted

bit 3 **CIS**: Comparator Input Switch bit
When CM2:CM0 = 110:
1 = C1 V_{IN}- connects to RA3/AN3
C2 V_{IN}- connects to RA2/AN2
0 = C1 V_{IN}- connects to RA0/AN0
C2 V_{IN}- connects to RA1/AN1

bit 2 **CM2:CM0**: Comparator Mode bits
Figure 12-1 shows the Comparator modes and CM2:CM0 bit settings.

Legend:			
R = Readable bit	W = Writable bit	U = Unimplemented bit, read as '0'	
- n = Value at POR	'1' = Bit is set	'0' = Bit is cleared	x = Bit is unknown

12.1 Comparator Configuration

There are eight modes of operation for the comparators. The CMCON register is used to select these modes. Figure 12-1 shows the eight possible modes. The TRISA register controls the data direction of the comparator pins for each mode. If the Comparator mode is changed, the comparator output level may not be valid for the specified mode change delay shown in **Section 17.0 "Electrical Characteristics"**.

Note:	Comparator interrupts should be disabled during a Comparator mode change. Otherwise, a false interrupt may occur.

FIGURE 12-1: COMPARATOR I/O OPERATING MODES

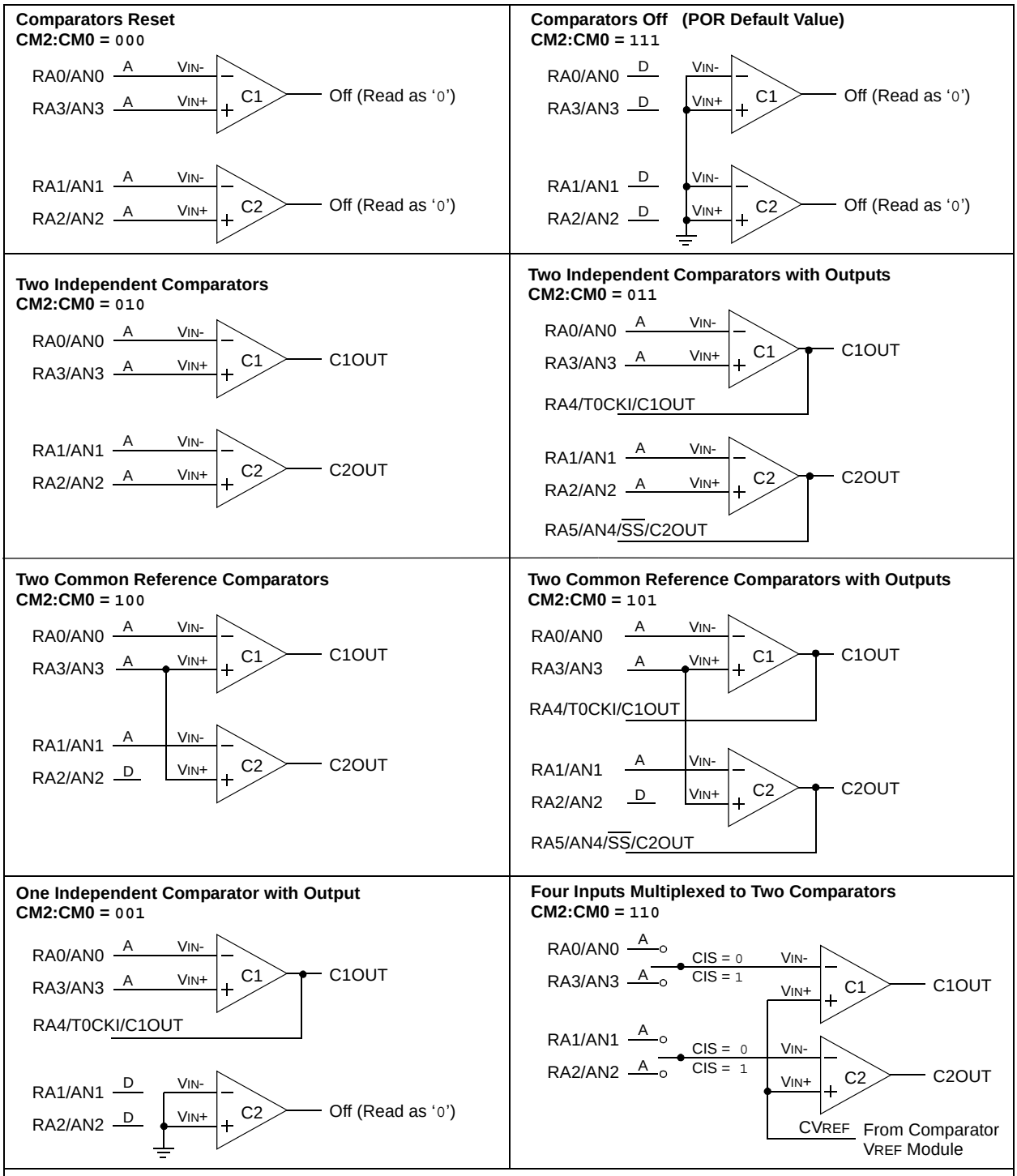

A = Analog Input, port reads zeros always. D = Digital Input. CIS (CMCON<3>) is the Comparator Input Switch.

© 2001-2013 Microchip Technology Inc.

12.2 Comparator Operation

A single comparator is shown in Figure 12-2 along with the relationship between the analog input levels and the digital output. When the analog input at VIN+ is less than the analog input VIN-, the output of the comparator is a digital low level. When the analog input at VIN+ is greater than the analog input VIN-, the output of the comparator is a digital high level. The shaded areas of the output of the comparator in Figure 12-2 represent the uncertainty due to input offsets and response time.

12.3 Comparator Reference

An external or internal reference signal may be used depending on the comparator operating mode. The analog signal present at VIN- is compared to the signal at VIN+ and the digital output of the comparator is adjusted accordingly (Figure 12-2).

FIGURE 12-2: SINGLE COMPARATOR

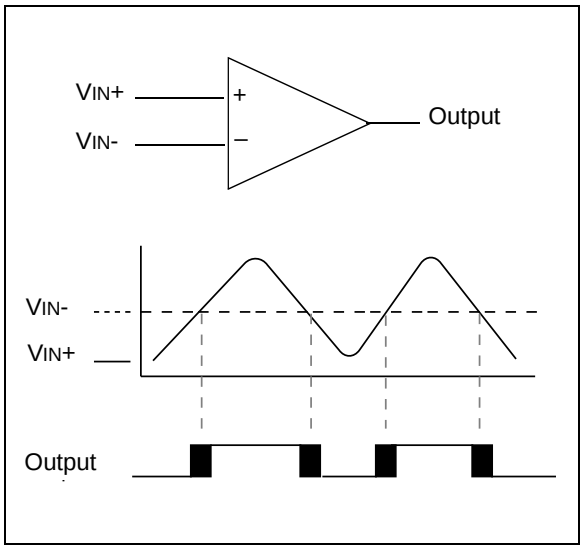

12.3.1 EXTERNAL REFERENCE SIGNAL

When external voltage references are used, the comparator module can be configured to have the comparators operate from the same or different reference sources. However, threshold detector applications may require the same reference. The reference signal must be between VSS and VDD and can be applied to either pin of the comparator(s).

12.3.2 INTERNAL REFERENCE SIGNAL

The comparator module also allows the selection of an internally generated voltage reference for the comparators. **Section 13.0 "Comparator Voltage Reference Module"** contains a detailed description of the Comparator Voltage Reference module that provides this signal. The internal reference signal is used when comparators are in mode, CM<2:0> = `110` (Figure 12-1). In this mode, the internal voltage reference is applied to the VIN+ pin of both comparators.

12.4 Comparator Response Time

Response time is the minimum time, after selecting a new reference voltage or input source, before the comparator output has a valid level. If the internal reference is changed, the maximum delay of the internal voltage reference must be considered when using the comparator outputs. Otherwise, the maximum delay of the comparators should be used (**Section 17.0 "Electrical Characteristics"**).

12.5 Comparator Outputs

The comparator outputs are read through the CMCON register. These bits are read-only. The comparator outputs may also be directly output to the RA4 and RA5 I/O pins. When enabled, multiplexors in the output path of the RA4 and RA5 pins will switch and the output of each pin will be the unsynchronized output of the comparator. The uncertainty of each of the comparators is related to the input offset voltage and the response time given in the specifications. Figure 12-3 shows the comparator output block diagram.

The TRISA bits will still function as an output enable/disable for the RA4 and RA5 pins while in this mode.

The polarity of the comparator outputs can be changed using the C2INV and C1INV bits (CMCON<4:5>).

Note 1:	When reading the Port register, all pins configured as analog inputs will read as a '`0`'. Pins configured as digital inputs will convert an analog input according to the Schmitt Trigger input specification.
2:	Analog levels on any pin defined as a digital input may cause the input buffer to consume more current than is specified.
3:	RA4 is an open collector I/O pin. When used as an output, a pull-up resistor is required.

FIGURE 12-3: COMPARATOR OUTPUT BLOCK DIAGRAM

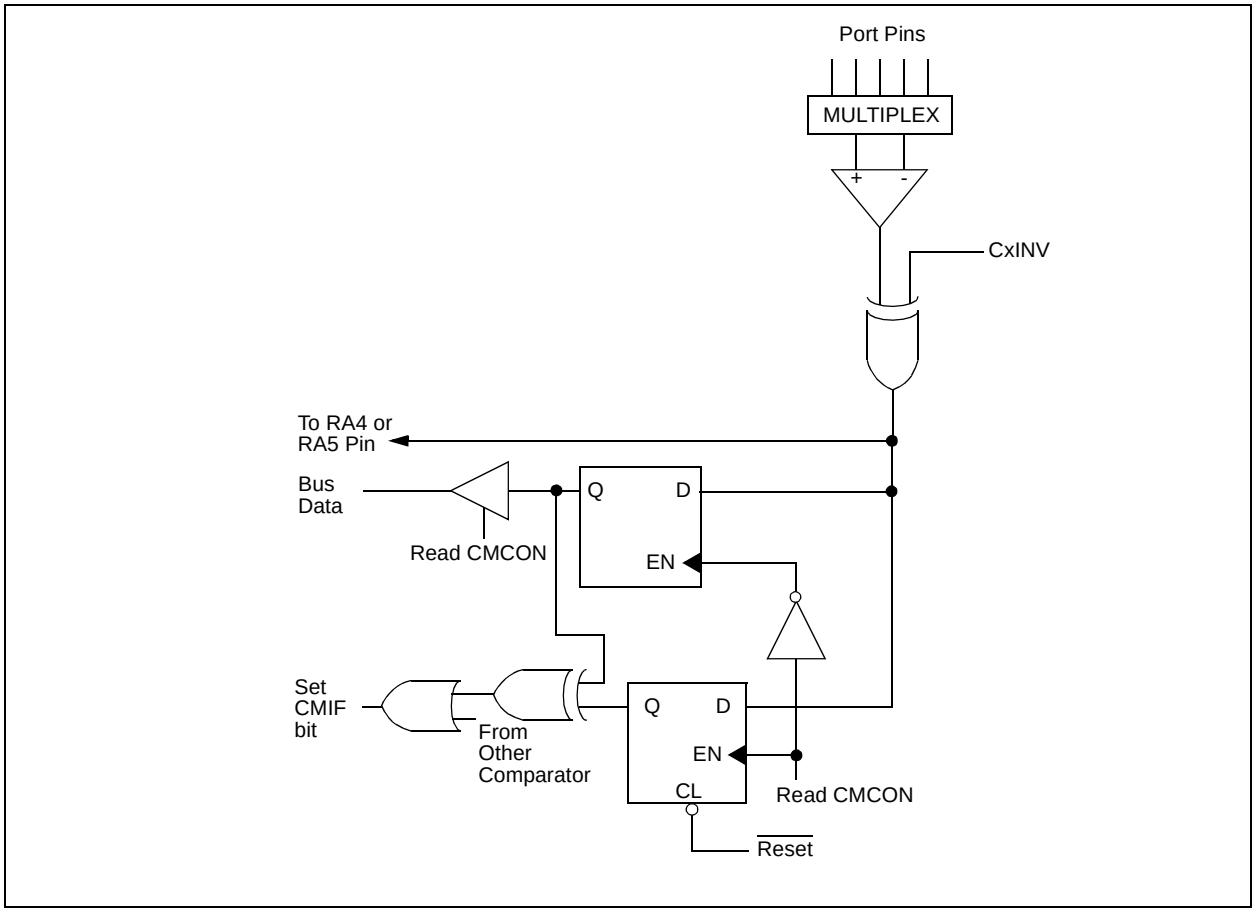

12.6 Comparator Interrupts

The comparator interrupt flag is set whenever there is a change in the output value of either comparator. Software will need to maintain information about the status of the output bits, as read from CMCON<7:6>, to determine the actual change that occurred. The CMIF bit (PIR registers) is the Comparator Interrupt Flag. The CMIF bit must be reset by clearing it ('0'). Since it is also possible to write a '1' to this register, a simulated interrupt may be initiated.

The CMIE bit (PIE registers) and the PEIE bit (INTCON register) must be set to enable the interrupt. In addition, the GIE bit must also be set. If any of these bits are clear, the interrupt is not enabled, though the CMIF bit will still be set if an interrupt condition occurs.

Note:	If a change in the CMCON register (C1OUT or C2OUT) should occur when a read operation is being executed (start of the Q2 cycle), then the CMIF (PIR registers) interrupt flag may not get set.

The user, in the Interrupt Service Routine, can clear the interrupt in the following manner:

a) Any read or write of CMCON will end the mismatch condition.

b) Clear flag bit CMIF.

A mismatch condition will continue to set flag bit CMIF. Reading CMCON will end the mismatch condition and allow flag bit CMIF to be cleared.

© 2001-2013 Microchip Technology Inc.

12.7 Comparator Operation During Sleep

When a comparator is active and the device is placed in Sleep mode, the comparator remains active and the interrupt is functional if enabled. This interrupt will wake-up the device from Sleep mode when enabled. While the comparator is powered up, higher Sleep currents than shown in the power-down current specification will occur. Each operational comparator will consume additional current as shown in the comparator specifications. To minimize power consumption while in Sleep mode, turn off the comparators, CM<2:0> = 111, before entering Sleep. If the device wakes up from Sleep, the contents of the CMCON register are not affected.

12.8 Effects of a Reset

A device Reset forces the CMCON register to its Reset state, causing the comparator module to be in the Comparator Off mode, CM<2:0> = `111`. This ensures compatibility to the PIC16F87X devices.

12.9 Analog Input Connection Considerations

A simplified circuit for an analog input is shown in Figure 12-4. Since the analog pins are connected to a digital output, they have reverse biased diodes to V_{DD} and V_{SS}. The analog input, therefore, must be between V_{SS} and V_{DD}. If the input voltage deviates from this range by more than 0.6V in either direction, one of the diodes is forward biased and a latch-up condition may occur. A maximum source impedance of 10 kΩ is recommended for the analog sources. Any external component connected to an analog input pin, such as a capacitor or a Zener diode, should have very little leakage current.

FIGURE 12-4: ANALOG INPUT MODEL

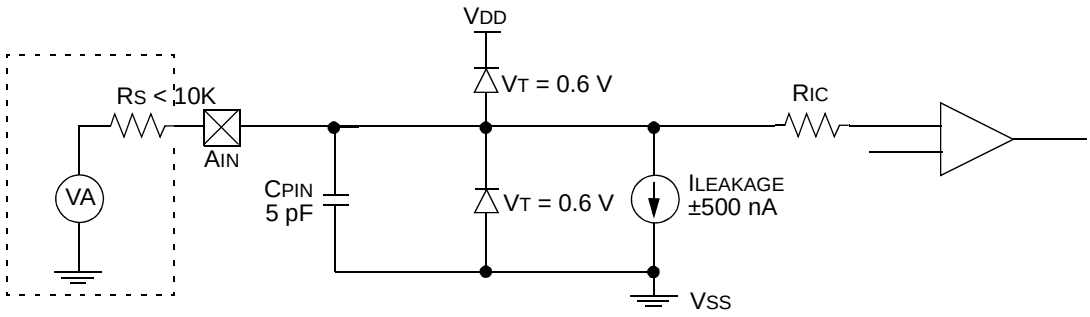

Legend:

C_{PIN}	=	Input Capacitance
V_T	=	Threshold Voltage
$I_{LEAKAGE}$	=	Leakage Current at the pin due to various junctions
R_{IC}	=	Interconnect Resistance
R_S	=	Source Impedance
VA	=	Analog Voltage

TABLE 12-1: REGISTERS ASSOCIATED WITH COMPARATOR MODULE

Address	Name	Bit 7	Bit 6	Bit 5	Bit 4	Bit 3	Bit 2	Bit 1	Bit 0	Value on POR	Value on all other Resets
9Ch	CMCON	C2OUT	C1OUT	C2INV	C1INV	CIS	CM2	CM1	CM0	0000 0111	0000 0111
9Dh	CVRCON	CVREN	CVROE	CVRR	—	CVR3	CVR2	CVR1	CVR0	000- 0000	000- 0000
0Bh, 8Bh, 10Bh,18Bh	INTCON	GIE/ GIEH	PEIE/ GIEL	TMR0IE	INTIE	RBIE	TMR0IF	INTIF	RBIF	0000 000x	0000 000u
0Dh	PIR2	—	CMIF	—	—	BCLIF	LVDIF	TMR3IF	CCP2IF	-0-- 0000	-0-- 0000
8Dh	PIE2	—	CMIE	—	—	BCLIE	LVDIE	TMR3IE	CCP2IE	-0-- 0000	-0-- 0000
05h	PORTA	—	—	RA5	RA4	RA3	RA2	RA1	RA0	--0x 0000	--0u 0000
85h	TRISA	—	—	PORTA Data Direction Register						--11 1111	--11 1111

Legend: x = unknown, u = unchanged, - = unimplemented, read as '0'. Shaded cells are unused by the comparator module.

© 2001-2013 Microchip Technology Inc.

13.0 COMPARATOR VOLTAGE REFERENCE MODULE

The Comparator Voltage Reference Generator is a 16-tap resistor ladder network that provides a fixed voltage reference when the comparators are in mode '110'. A programmable register controls the function of the reference generator. Register 13-1 lists the bit functions of the CVRCON register.

As shown in Figure 13-1, the resistor ladder is segmented to provide two ranges of CV_{REF} values and has a power-down function to conserve power when the reference is not being used. The comparator reference supply voltage (also referred to as CV_{RSRC}) comes directly from V_{DD}. It should be noted, however, that the voltage at the top of the ladder is $CV_{RSRC} - V_{SAT}$, where V_{SAT} is the saturation voltage of the power switch transistor. This reference will only be as accurate as the values of CV_{RSRC} and V_{SAT}.

The output of the reference generator may be connected to the RA2/AN2/V_{REF}-/CV_{REF} pin. This can be used as a simple D/A function by the user if a very high-impedance load is used. The primary purpose of this function is to provide a test path for testing the reference generator function.

REGISTER 13-1: CVRCON CONTROL REGISTER (ADDRESS 9Dh)

R/W-0	R/W-0	R/W-0	U-0	R/W-0	R/W-0	R/W-0	R/W-0
CVREN	CVROE	CVRR	—	CVR3	CVR2	CVR1	CVR0
bit 7							bit 0

bit 7 **CVREN**: Comparator Voltage Reference Enable bit
1 = CV_{REF} circuit powered on
0 = CV_{REF} circuit powered down

bit 6 **CVROE:** Comparator V_{REF} Output Enable bit
1 = CV_{REF} voltage level is output on RA2/AN2/V_{REF}-/CV_{REF} pin
0 = CV_{REF} voltage level is disconnected from RA2/AN2/V_{REF}-/CV_{REF} pin

bit 5 **CVRR**: Comparator V_{REF} Range Selection bit
1 = 0 to 0.75 CV_{RSRC}, with CV_{RSRC}/24 step size
0 = 0.25 CV_{RSRC} to 0.75 CV_{RSRC}, with CV_{RSRC}/32 step size

bit 4 **Unimplemented:** Read as '0'

bit 3-0 **CVR3:CVR0:** Comparator V_{REF} Value Selection bits $0 \le VR3:VR0 \le 15$
When CVRR = 1:
$CV_{REF} = (VR<3:0>/ 24) \bullet (CV_{RSRC})$
When CVRR = 0:
$CV_{REF} = 1/4 \bullet (CV_{RSRC}) + (VR3:VR0/ 32) \bullet (CV_{RSRC})$

Legend:			
R = Readable bit	W = Writable bit	U = Unimplemented bit, read as '0'	
-n = Value at POR	'1' = Bit is set	'0' = Bit is cleared	x = Bit is unknown

FIGURE 13-1: COMPARATOR VOLTAGE REFERENCE BLOCK DIAGRAM

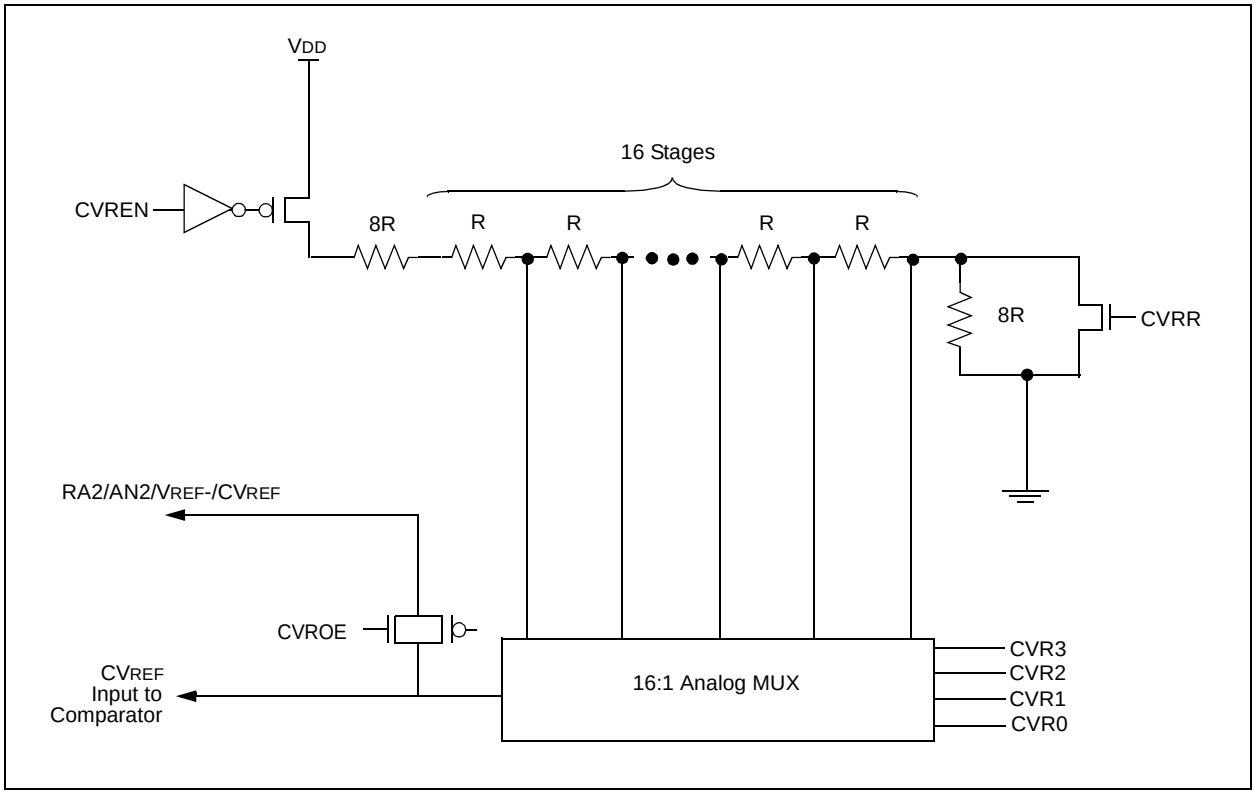

TABLE 13-1: REGISTERS ASSOCIATED WITH COMPARATOR VOLTAGE REFERENCE

Address	Name	Bit 7	Bit 6	Bit 5	Bit 4	Bit 3	Bit 2	Bit 1	Bit 0	Value on POR	Value on all other Resets
9Dh	CVRCON	CVREN	CVROE	CVRR	—	CVR3	CVR2	CVR1	CVR0	000- 0000	000- 0000
9Ch	CMCON	C2OUT	C1OUT	C2INV	C1INV	CIS	CM2	CM1	CM0	0000 0111	0000 0111

Legend: x = unknown, u = unchanged, - = unimplemented, read as '0'.
Shaded cells are not used with the comparator voltage reference.

© 2001-2013 Microchip Technology Inc.

14.0 SPECIAL FEATURES OF THE CPU

All PIC16F87XA devices have a host of features intended to maximize system reliability, minimize cost through elimination of external components, provide power saving operating modes and offer code protection. These are:

- Oscillator Selection
- Reset
  - Power-on Reset (POR)
  - Power-up Timer (PWRT)
  - Oscillator Start-up Timer (OST)
  - Brown-out Reset (BOR)
- Interrupts
- Watchdog Timer (WDT)
- Sleep
- Code Protection
- ID Locations
- In-Circuit Serial Programming
- Low-Voltage In-Circuit Serial Programming
- In-Circuit Debugger

PIC16F87XA devices have a Watchdog Timer which can be shut-off only through configuration bits. It runs off its own RC oscillator for added reliability.

There are two timers that offer necessary delays on power-up. One is the Oscillator Start-up Timer (OST), intended to keep the chip in Reset until the crystal oscillator is stable. The other is the Power-up Timer (PWRT), which provides a fixed delay of 72 ms (nominal) on power-up only. It is designed to keep the part in Reset while the power supply stabilizes. With these two timers on-chip, most applications need no external Reset circuitry.

Sleep mode is designed to offer a very low current power-down mode. The user can wake-up from Sleep through external Reset, Watchdog Timer wake-up or through an interrupt.

Several oscillator options are also made available to allow the part to fit the application. The RC oscillator option saves system cost while the LP crystal option saves power. A set of configuration bits is used to select various options.

Additional information on special features is available in the PIC® Mid-Range MCU Family Reference Manual (DS33023).

14.1 Configuration Bits

The configuration bits can be programmed (read as '0'), or left unprogrammed (read as '1') to select various device configurations. The erased or unprogrammed value of the Configuration Word register is 3FFFh. These bits are mapped in program memory location 2007h.

It is important to note that address 2007h is beyond the user program memory space which can be accessed only during programming.

REGISTER 14-1: CONFIGURATION WORD (ADDRESS 2007h)(1)

R/P-1	U-0	R/P-1	R/P-1	R/P-1	R/P-1	R/P-1	R/P-1	U-0	U-0	R/P-1	R/P-1	R/P-1	R/P-1
CP	—	DEBUG	WRT1	WRT0	CPD	LVP	BOREN	—	—	$\overline{\text{PWRTEN}}$	WDTEN	FOSC1	FOSC0
bit 13													bit0

bit 13 **CP:** Flash Program Memory Code Protection bit
1 = Code protection off
0 = All program memory code-protected

bit 12 **Unimplemented:** Read as '1'

bit 11 **DEBUG:** In-Circuit Debugger Mode bit
1 = In-Circuit Debugger disabled, RB6 and RB7 are general purpose I/O pins
0 = In-Circuit Debugger enabled, RB6 and RB7 are dedicated to the debugger

bit 10-9 **WRT1:WRT0** Flash Program Memory Write Enable bits
For PIC16F876A/877A:
11 = Write protection off; all program memory may be written to by EECON control
10 = 0000h to 00FFh write-protected; 0100h to 1FFFh may be written to by EECON control
01 = 0000h to 07FFh write-protected; 0800h to 1FFFh may be written to by EECON control
00 = 0000h to 0FFFh write-protected; 1000h to 1FFFh may be written to by EECON control
For PIC16F873A/874A:
11 = Write protection off; all program memory may be written to by EECON control
10 = 0000h to 00FFh write-protected; 0100h to 0FFFh may be written to by EECON control
01 = 0000h to 03FFh write-protected; 0400h to 0FFFh may be written to by EECON control
00 = 0000h to 07FFh write-protected; 0800h to 0FFFh may be written to by EECON control

bit 8 **CPD:** Data EEPROM Memory Code Protection bit
1 = Data EEPROM code protection off
0 = Data EEPROM code-protected

bit 7 **LVP**: Low-Voltage (Single-Supply) In-Circuit Serial Programming Enable bit
1 = RB3/PGM pin has PGM function; low-voltage programming enabled
0 = RB3 is digital I/O, HV on $\overline{\text{MCLR}}$ must be used for programming

bit 6 **BOREN**: Brown-out Reset Enable bit
1 = BOR enabled
0 = BOR disabled

bit 5-4 **Unimplemented:** Read as '1'

bit 3 **$\overline{\text{PWRTEN}}$**: Power-up Timer Enable bit
1 = PWRT disabled
0 = PWRT enabled

bit 2 **WDTEN**: Watchdog Timer Enable bit
1 = WDT enabled
0 = WDT disabled

bit 1-0 **Fosc1:Fosc0**: Oscillator Selection bits
11 = RC oscillator
10 = HS oscillator
01 = XT oscillator
00 = LP oscillator

Legend:		
R = Readable bit	P = Programmable bit	U = Unimplemented bit, read as '0'
- n = Value when device is unprogrammed		u = Unchanged from programmed state

Note 1: The erased (unprogrammed) value of the Configuration Word is 3FFFh.

© 2001-2013 Microchip Technology Inc.

14.2 Oscillator Configurations

14.2.1 OSCILLATOR TYPES

The PIC16F87XA can be operated in four different oscillator modes. The user can program two configuration bits (FOSC1 and FOSC0) to select one of these four modes:

- LP Low-Power Crystal
- XT Crystal/Resonator
- HS High-Speed Crystal/Resonator
- RC Resistor/Capacitor

14.2.2 CRYSTAL OSCILLATOR/CERAMIC RESONATORS

In XT, LP or HS modes, a crystal or ceramic resonator is connected to the OSC1/CLKI and OSC2/CLKO pins to establish oscillation (Figure 14-1). The PIC16F87XA oscillator design requires the use of a parallel cut crystal. Use of a series cut crystal may give a frequency out of the crystal manufacturer's specifications. When in XT, LP or HS modes, the device can have an external clock source to drive the OSC1/CLKI pin (Figure 14-2).

FIGURE 14-1: CRYSTAL/CERAMIC RESONATOR OPERATION (HS, XT OR LP OSC CONFIGURATION)

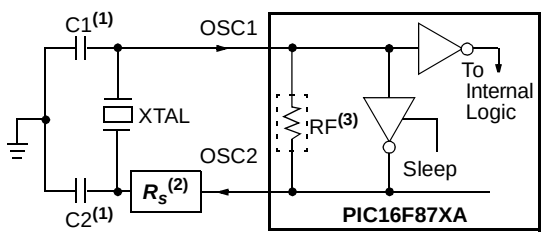

Note 1: See Table 14-1 and Table 14-2 for recommended values of C1 and C2.

2: A series resistor (R_S) may be required for AT strip cut crystals.

3: RF varies with the crystal chosen.

FIGURE 14-2: EXTERNAL CLOCK INPUT OPERATION (HS, XT OR LP OSC CONFIGURATION)

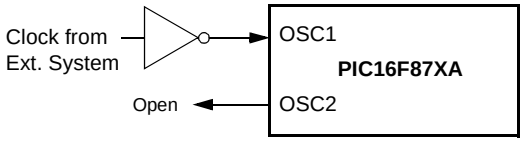

TABLE 14-1: CERAMIC RESONATORS

Ranges Tested:			
Mode	**Freq.**	**OSC1**	**OSC2**
XT	455 kHz 2.0 MHz 4.0 MHz	68-100 pF 15-68 pF 15-68 pF	68-100 pF 15-68 pF 15-68 pF
HS	8.0 MHz 16.0 MHz	10-68 pF 10-22 pF	10-68 pF 10-22 pF
These values are for design guidance only. See notes following Table 14-2.			
Resonators Used:			
2.0 MHz	Murata Erie CSA2.00MG	± 0.5%	
4.0 MHz	Murata Erie CSA4.00MG	± 0.5%	
8.0 MHz	Murata Erie CSA8.00MT	± 0.5%	
16.0 MHz	Murata Erie CSA16.00MX	± 0.5%	
All resonators used did not have built-in capacitors.			

TABLE 14-2: CAPACITOR SELECTION FOR CRYSTAL OSCILLATOR

Osc Type	Crystal Freq.	Cap. Range C1	Cap. Range C2
LP	32 kHz	33 pF	33 pF
	200 kHz	15 pF	15 pF
XT	200 kHz	47-68 pF	47-68 pF
	1 MHz	15 pF	15 pF
	4 MHz	15 pF	15 pF
HS	4 MHz	15 pF	15 pF
	8 MHz	15-33 pF	15-33 pF
	20 MHz	15-33 pF	15-33 pF
These values are for design guidance only. See notes following this table.			
Crystals Used			
32 kHz	Epson C-001R32.768K-A	± 20 PPM	
200 kHz	STD XTL 200.000KHz	± 20 PPM	
1 MHz	ECS ECS-10-13-1	± 50 PPM	
4 MHz	ECS ECS-40-20-1	± 50 PPM	
8 MHz	EPSON CA-301 8.000M-C	± 30 PPM	
20 MHz	EPSON CA-301 20.000M-C	± 30 PPM	

Note 1: Higher capacitance increases the stability of oscillator but also increases the start-up time.

2: Since each resonator/crystal has its own characteristics, the user should consult the resonator/crystal manufacturer for appropriate values of external components.

3: R_S may be required in HS mode, as well as XT mode, to avoid overdriving crystals with low drive level specification.

4: When migrating from other PIC® devices, oscillator performance should be verified.

14.2.3 RC OSCILLATOR

For timing insensitive applications, the “RC” device option offers additional cost savings. The RC oscillator frequency is a function of the supply voltage, the resistor (REXT) and capacitor (CEXT) values and the operating temperature. In addition to this, the oscillator frequency will vary from unit to unit due to normal process parameter variation. Furthermore, the difference in lead frame capacitance between package types will also affect the oscillation frequency, especially for low CEXT values. The user also needs to take into account variation due to tolerance of external R and C components used. Figure 14-3 shows how the R/C combination is connected to the PIC16F87XA.

FIGURE 14-3: RC OSCILLATOR MODE

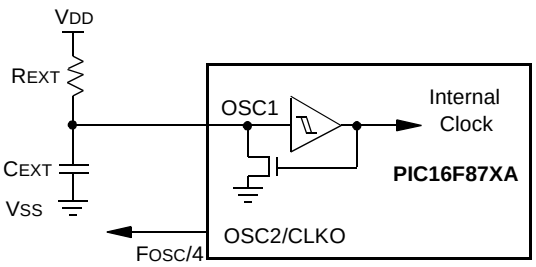

Recommended values: 3 kΩ ≤ REXT ≤ 100 kΩ
CEXT > 20 pF

© 2001-2013 Microchip Technology Inc.

14.3 Reset

The PIC16F87XA differentiates between various kinds of Reset:

- Power-on Reset (POR)
- $\overline{\text{MCLR}}$ Reset during normal operation
- $\overline{\text{MCLR}}$ Reset during Sleep
- WDT Reset (during normal operation)
- WDT Wake-up (during Sleep)
- Brown-out Reset (BOR)

Some registers are not affected in any Reset condition. Their status is unknown on POR and unchanged in any other Reset. Most other registers are reset to a "Reset state" on Power-on Reset (POR), on the $\overline{\text{MCLR}}$ and WDT Reset, on $\overline{\text{MCLR}}$ Reset during Sleep and Brown-out Reset (BOR). They are not affected by a WDT wake-up which is viewed as the resumption of normal operation. The $\overline{\text{TO}}$ and $\overline{\text{PD}}$ bits are set or cleared differently in different Reset situations as indicated in Table 14-4. These bits are used in software to determine the nature of the Reset. See Table 14-6 for a full description of Reset states of all registers.

A simplified block diagram of the on-chip Reset circuit is shown in Figure 14-4.

FIGURE 14-4: SIMPLIFIED BLOCK DIAGRAM OF ON-CHIP RESET CIRCUIT

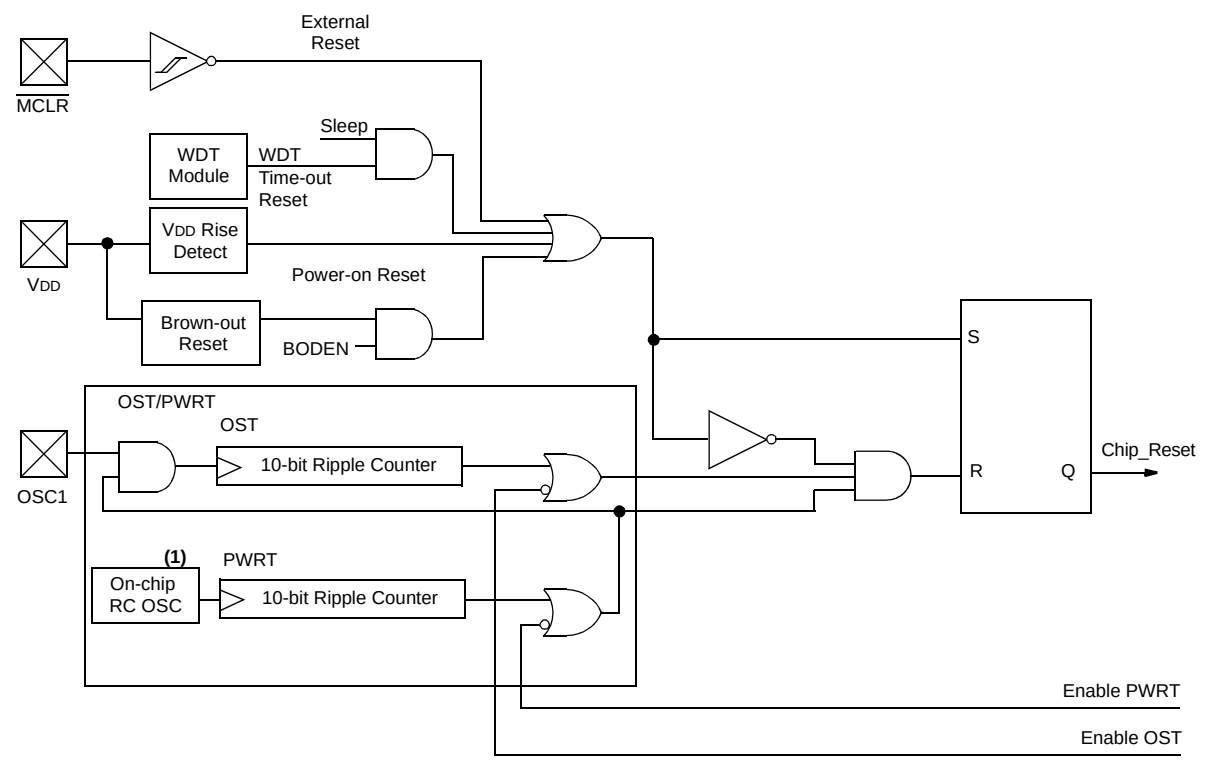

Note 1: This is a separate oscillator from the RC oscillator of the CLKI pin.

14.4 $\overline{\text{MCLR}}$

PIC16F87XA devices have a noise filter in the $\overline{\text{MCLR}}$ Reset path. The filter will detect and ignore small pulses.

It should be noted that a WDT Reset does not drive $\overline{\text{MCLR}}$ pin low.

The behavior of the ESD protection on the $\overline{\text{MCLR}}$ pin differs from previous devices of this family. Voltages applied to the pin that exceed its specification can result in both Resets and current consumption outside of device specification during the Reset event. For this reason, Microchip recommends that the $\overline{\text{MCLR}}$ pin no longer be tied directly to VDD. The use of an RCR network, as shown in Figure 14-5, is suggested.

FIGURE 14-5: RECOMMENDED $\overline{\text{MCLR}}$ CIRCUIT

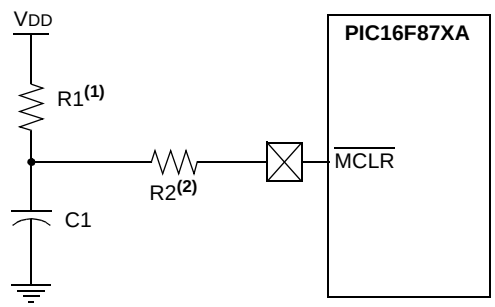

Note 1: R1 < 40 kΩ is recommended to make sure that the voltage drop across R does not violate the device's electrical specification.

2: R2 > than 1K will limit any current flowing into $\overline{\text{MCLR}}$ from the external capacitor C, in the event of $\overline{\text{MCLR}}$/VPP breakdown due to Electrostatic Discharge (ESD) or Electrical Overstress (EOS).

14.5 Power-on Reset (POR)

A Power-on Reset pulse is generated on-chip when VDD rise is detected (in the range of 1.2V-1.7V). To take advantage of the POR, tie the $\overline{\text{MCLR}}$ pin to VDD through an RC network, as described in **Section 14.4 "MCLR"**. A maximum rise time for VDD is specified. See **Section 17.0 "Electrical Characteristics"** for details.

When the device starts normal operation (exits the Reset condition), device operating parameters (voltage, frequency, temperature, etc.) must be met to ensure operation. If these conditions are not met, the device must be held in Reset until the operating conditions are met. Brown-out Reset may be used to meet the start-up conditions. For additional information, refer to application note, *AN607,* "*Power-up Trouble Shooting*" (DS00607).

14.6 Power-up Timer (PWRT)

The Power-up Timer provides a fixed 72 ms nominal time-out on power-up only from the POR. The Power-up Timer operates on an internal RC oscillator. The chip is kept in Reset as long as the PWRT is active. The PWRT's time delay allows VDD to rise to an acceptable level. A configuration bit is provided to enable or disable the PWRT.

The power-up time delay will vary from chip to chip due to VDD, temperature and process variation. See **Section 17.0 "Electrical Characteristics"** for details (TPWRT, parameter #33).

14.7 Oscillator Start-up Timer (OST)

The Oscillator Start-up Timer (OST) provides a delay of 1024 oscillator cycles (from OSC1 input) after the PWRT delay is over (if PWRT is enabled). This helps to ensure that the crystal oscillator or resonator has started and stabilized.

The OST time-out is invoked only for XT, LP and HS modes and only on Power-on Reset or wake-up from Sleep.

14.8 Brown-out Reset (BOR)

The configuration bit, BODEN, can enable or disable the Brown-out Reset circuit. If VDD falls below VBOR (parameter D005, about 4V) for longer than TBOR (parameter #35, about 100 μS), the brown-out situation will reset the device. If VDD falls below VBOR for less than TBOR, a Reset may not occur.

Once the brown-out occurs, the device will remain in Brown-out Reset until VDD rises above VBOR. The Power-up Timer then keeps the device in Reset for TPWRT (parameter #33, about 72 mS). If VDD should fall below VBOR during TPWRT, the Brown-out Reset process will restart when VDD rises above VBOR with the Power-up Timer Reset. The Power-up Timer is always enabled when the Brown-out Reset circuit is enabled, regardless of the state of the PWRT configuration bit.

14.9 Time-out Sequence

On power-up, the time-out sequence is as follows: the PWRT delay starts (if enabled) when a POR Reset occurs. Then, OST starts counting 1024 oscillator cycles when PWRT ends (LP, XT, HS). When the OST ends, the device comes out of Reset.

If $\overline{\text{MCLR}}$ is kept low long enough, the time-outs will expire. Bringing $\overline{\text{MCLR}}$ high will begin execution immediately. This is useful for testing purposes or to synchronize more than one PIC16F87XA device operating in parallel.

Table 14-5 shows the Reset conditions for the Status, PCON and PC registers, while Table 14-6 shows the Reset conditions for all the registers.

© 2001-2013 Microchip Technology Inc.

14.10 Power Control/Status Register (PCON)

The Power Control/Status Register, PCON, has up to two bits depending upon the device.

Bit 0 is the Brown-out Reset Status bit, $\overline{BOR}$. The $\overline{BOR}$ bit is unknown on a Power-on Reset. It must then be set by the user and checked on subsequent Resets to see if it has been cleared, indicating that a BOR has occurred. When the Brown-out Reset is disabled, the state of the $\overline{BOR}$ bit is unpredictable and is, therefore, not valid at any time.

Bit 1 is the Power-on Reset Status bit, $\overline{POR}$. It is cleared on a Power-on Reset and unaffected otherwise. The user must set this bit following a Power-on Reset.

TABLE 14-3: TIME-OUT IN VARIOUS SITUATIONS

Oscillator Configuration	Power-up		Brown-out	Wake-up from Sleep
	$\overline{PWRTE}$ = 0	$\overline{PWRTE}$ = 1		
XT, HS, LP	72 ms + 1024 TOSC	1024 TOSC	72 ms + 1024 TOSC	1024 TOSC
RC	72 ms	—	72 ms	—

TABLE 14-4: STATUS BITS AND THEIR SIGNIFICANCE

$\overline{POR}$	$\overline{BOR}$	$\overline{TO}$	$\overline{PD}$	Condition
0	x	1	1	Power-on Reset
0	x	0	x	Illegal, $\overline{TO}$ is set on $\overline{POR}$
0	x	x	0	Illegal, $\overline{PD}$ is set on $\overline{POR}$
1	0	1	1	Brown-out Reset
1	1	0	1	WDT Reset
1	1	0	0	WDT Wake-up
1	1	u	u	$\overline{MCLR}$ Reset during normal operation
1	1	1	0	$\overline{MCLR}$ Reset during Sleep or Interrupt Wake-up from Sleep

Legend: x = don't care, u = unchanged

TABLE 14-5: RESET CONDITIONS FOR SPECIAL REGISTERS

Condition	Program Counter	Status Register	PCON Register
Power-on Reset	000h	0001 1xxx	---- --0x
$\overline{MCLR}$ Reset during normal operation	000h	000u uuuu	---- --uu
$\overline{MCLR}$ Reset during Sleep	000h	0001 0uuu	---- --uu
WDT Reset	000h	0000 1uuu	---- --uu
WDT Wake-up	PC + 1	uuu0 0uuu	---- --uu
Brown-out Reset	000h	0001 1uuu	---- --u0
Interrupt Wake-up from Sleep	PC + 1(1)	uuu1 0uuu	---- --uu

Legend: u = unchanged, x = unknown, - = unimplemented bit, read as '0'

Note 1: When the wake-up is due to an interrupt and the GIE bit is set, the PC is loaded with the interrupt vector (0004h).

TABLE 14-6: INITIALIZATION CONDITIONS FOR ALL REGISTERS

Register	Devices				Power-on Reset, Brown-out Reset	$\overline{\text{MCLR}}$ Resets, WDT Reset	Wake-up via WDT or Interrupt
W	73A	74A	76A	77A	xxxx xxxx	uuuu uuuu	uuuu uuuu
INDF	73A	74A	76A	77A	N/A	N/A	N/A
TMR0	73A	74A	76A	77A	xxxx xxxx	uuuu uuuu	uuuu uuuu
PCL	73A	74A	76A	77A	0000 0000	0000 0000	PC + 1(2)
STATUS	73A	74A	76A	77A	0001 1xxx	000q quuu(3)	uuuq quuu(3)
FSR	73A	74A	76A	77A	xxxx xxxx	uuuu uuuu	uuuu uuuu
PORTA	73A	74A	76A	77A	--0x 0000	--0u 0000	--uu uuuu
PORTB	73A	74A	76A	77A	xxxx xxxx	uuuu uuuu	uuuu uuuu
PORTC	73A	74A	76A	77A	xxxx xxxx	uuuu uuuu	uuuu uuuu
PORTD	73A	74A	76A	77A	xxxx xxxx	uuuu uuuu	uuuu uuuu
PORTE	73A	74A	76A	77A	---- -xxx	---- -uuu	---- -uuu
PCLATH	73A	74A	76A	77A	---0 0000	---0 0000	---u uuuu
INTCON	73A	74A	76A	77A	0000 000x	0000 000u	uuuu uuuu(1)
PIR1	73A	74A	76A	77A	r000 0000	r000 0000	ruuu uuuu(1)
	73A	74A	76A	77A	0000 0000	0000 0000	uuuu uuuu(1)
PIR2	73A	74A	76A	77A	-0-0 0--0	-0-0 0--0	-u-u u--u(1)
TMR1L	73A	74A	76A	77A	xxxx xxxx	uuuu uuuu	uuuu uuuu
TMR1H	73A	74A	76A	77A	xxxx xxxx	uuuu uuuu	uuuu uuuu
T1CON	73A	74A	76A	77A	--00 0000	--uu uuuu	--uu uuuu
TMR2	73A	74A	76A	77A	0000 0000	0000 0000	uuuu uuuu
T2CON	73A	74A	76A	77A	-000 0000	-000 0000	-uuu uuuu
SSPBUF	73A	74A	76A	77A	xxxx xxxx	uuuu uuuu	uuuu uuuu
SSPCON	73A	74A	76A	77A	0000 0000	0000 0000	uuuu uuuu
CCPR1L	73A	74A	76A	77A	xxxx xxxx	uuuu uuuu	uuuu uuuu
CCPR1H	73A	74A	76A	77A	xxxx xxxx	uuuu uuuu	uuuu uuuu
CCP1CON	73A	74A	76A	77A	--00 0000	--00 0000	--uu uuuu
RCSTA	73A	74A	76A	77A	0000 000x	0000 000x	uuuu uuuu
TXREG	73A	74A	76A	77A	0000 0000	0000 0000	uuuu uuuu
RCREG	73A	74A	76A	77A	0000 0000	0000 0000	uuuu uuuu
CCPR2L	73A	74A	76A	77A	xxxx xxxx	uuuu uuuu	uuuu uuuu
CCPR2H	73A	74A	76A	77A	xxxx xxxx	uuuu uuuu	uuuu uuuu
CCP2CON	73A	74A	76A	77A	0000 0000	0000 0000	uuuu uuuu
ADRESH	73A	74A	76A	77A	xxxx xxxx	uuuu uuuu	uuuu uuuu
ADCON0	73A	74A	76A	77A	0000 00-0	0000 00-0	uuuu uu-u
OPTION_REG	73A	74A	76A	77A	1111 1111	1111 1111	uuuu uuuu
TRISA	73A	74A	76A	77A	--11 1111	--11 1111	--uu uuuu
TRISB	73A	74A	76A	77A	1111 1111	1111 1111	uuuu uuuu
TRISC	73A	74A	76A	77A	1111 1111	1111 1111	uuuu uuuu

Legend: u = unchanged, x = unknown, - = unimplemented bit, read as '0', q = value depends on condition, r = reserved, maintain clear. Shaded cells indicate conditions do not apply for the designated device.

Note 1: One or more bits in INTCON, PIR1 and/or PIR2 will be affected (to cause wake-up).

2: When the wake-up is due to an interrupt and the GIE bit is set, the PC is loaded with the interrupt vector (0004h).

3: See Table 14-5 for Reset value for specific condition.

© 2001-2013 Microchip Technology Inc.

TABLE 14-6: INITIALIZATION CONDITIONS FOR ALL REGISTERS (CONTINUED)

Register	Devices				Power-on Reset, Brown-out Reset	$\overline{\text{MCLR}}$ Resets, WDT Reset	Wake-up via WDT or Interrupt
TRISD	73A	74A	76A	77A	1111 1111	1111 1111	uuuu uuuu
TRISE	73A	74A	76A	77A	0000 -111	0000 -111	uuuu -uuu
PIE1	73A	74A	76A	77A	r000 0000	r000 0000	ruuu uuuu
	73A	74A	76A	77A	0000 0000	0000 0000	uuuu uuuu
PIE2	73A	74A	76A	77A	-0-0 0--0	-0-0 0--0	-u-u u--u
PCON	73A	74A	76A	77A	---- --qq	---- --uu	---- --uu
SSPCON2	73A	74A	76A	77A	0000 0000	0000 0000	uuuu uuuu
PR2	73A	74A	76A	77A	1111 1111	1111 1111	1111 1111
SSPADD	73A	74A	76A	77A	0000 0000	0000 0000	uuuu uuuu
SSPSTAT	73A	74A	76A	77A	--00 0000	--00 0000	--uu uuuu
TXSTA	73A	74A	76A	77A	0000 -010	0000 -010	uuuu -uuu
SPBRG	73A	74A	76A	77A	0000 0000	0000 0000	uuuu uuuu
CMCON	73A	974	76A	77A	0000 0111	0000 0111	uuuu uuuu
CVRCON	73A	74A	76A	77A	000- 0000	000- 0000	uuu- uuuu
ADRESL	73A	74A	76A	77A	xxxx xxxx	uuuu uuuu	uuuu uuuu
ADCON1	73A	74A	76A	77A	00-- 0000	00-- 0000	uu-- uuuu
EEDATA	73A	74A	76A	77A	xxxx xxxx	uuuu uuuu	uuuu uuuu
EEADR	73A	74A	76A	77A	xxxx xxxx	uuuu uuuu	uuuu uuuu
EEDATH	73A	74A	76A	77A	xxxx xxxx	uuuu uuuu	uuuu uuuu
EEADRH	73A	74A	76A	77A	xxxx xxxx	uuuu uuuu	uuuu uuuu
EECON1	73A	74A	76A	77A	x--- x000	u--- u000	u--- uuuu
EECON2	73A	74A	76A	77A	---- ----	---- ----	---- ----

Legend: u = unchanged, x = unknown, - = unimplemented bit, read as '0', q = value depends on condition, r = reserved, maintain clear. Shaded cells indicate conditions do not apply for the designated device.

Note 1: One or more bits in INTCON, PIR1 and/or PIR2 will be affected (to cause wake-up).

2: When the wake-up is due to an interrupt and the GIE bit is set, the PC is loaded with the interrupt vector (0004h).

3: See Table 14-5 for Reset value for specific condition.

FIGURE 14-6: TIME-OUT SEQUENCE ON POWER-UP ($\overline{\text{MCLR}}$ TIED TO VDD VIA RC NETWORK)

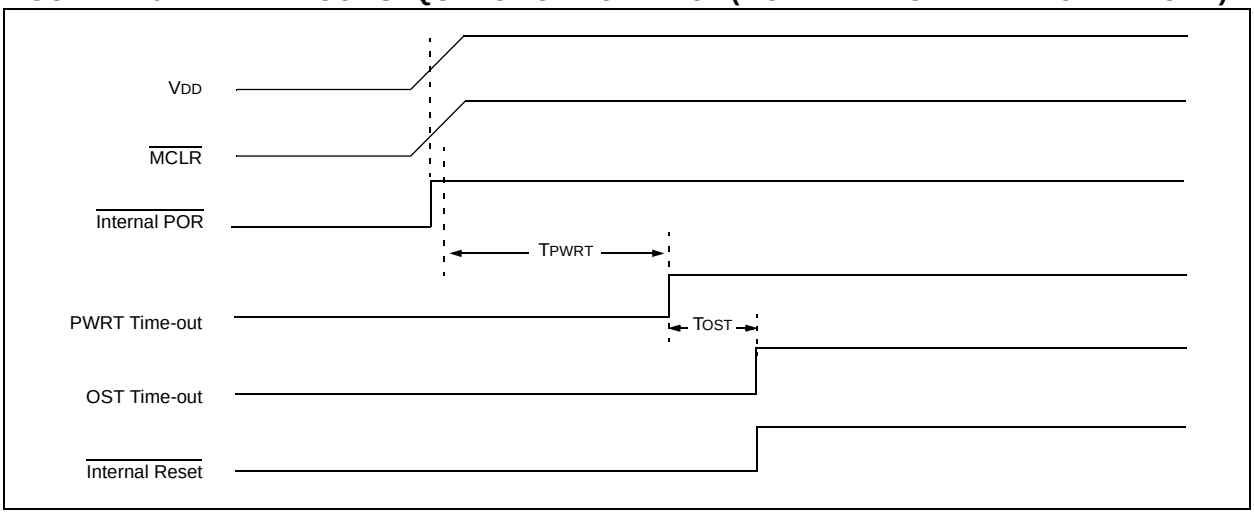

FIGURE 14-7: TIME-OUT SEQUENCE ON POWER-UP ($\overline{\text{MCLR}}$ NOT TIED TO V_{DD}): CASE 1

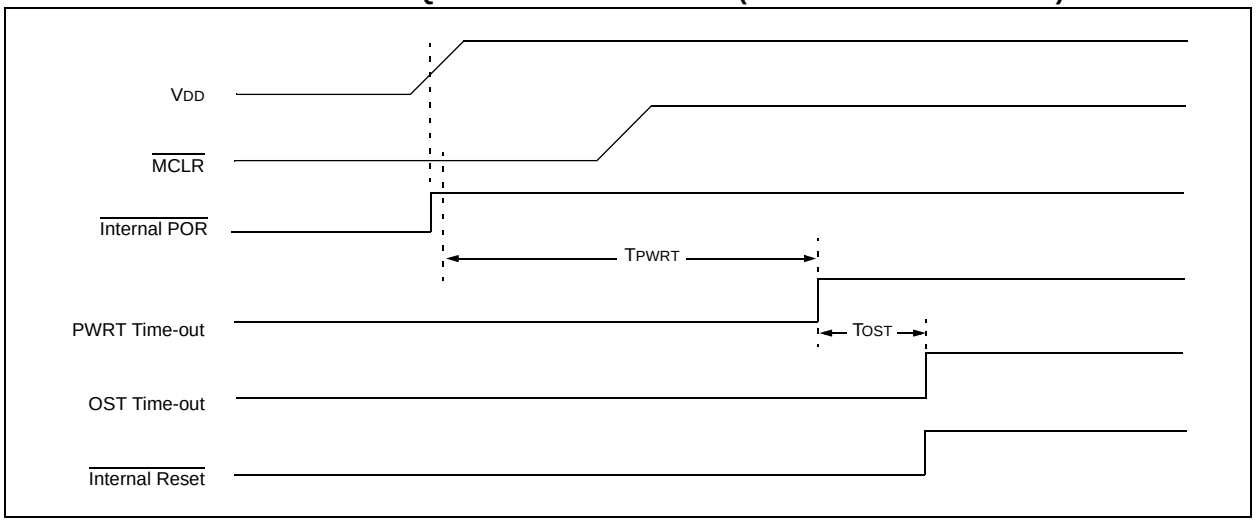

FIGURE 14-8: TIME-OUT SEQUENCE ON POWER-UP ($\overline{\text{MCLR}}$ NOT TIED TO V_{DD}): CASE 2

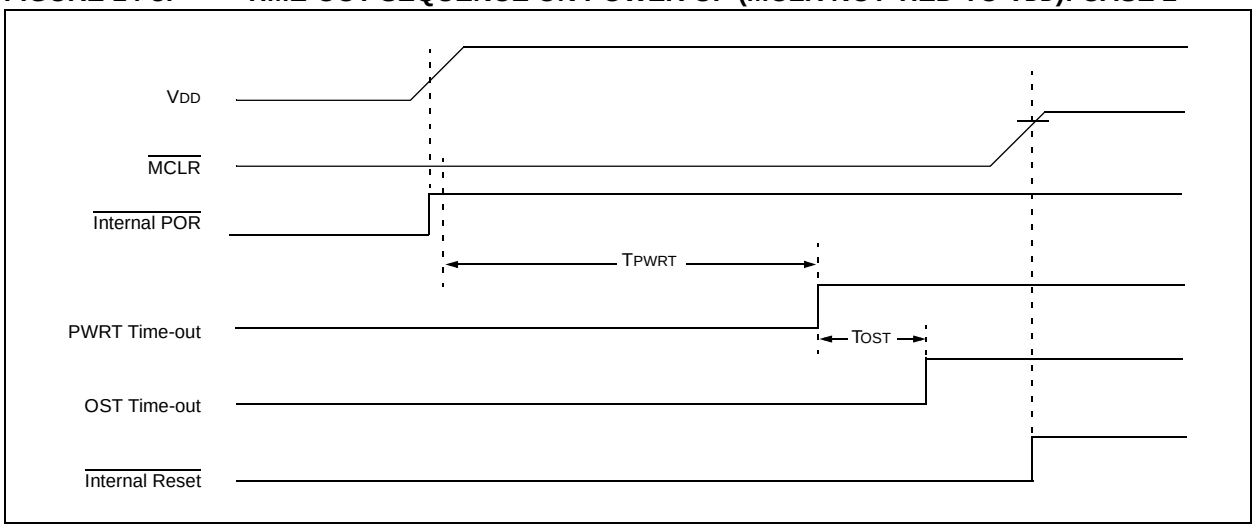

FIGURE 14-9: SLOW RISE TIME ($\overline{\text{MCLR}}$ TIED TO V_{DD} VIA RC NETWORK)

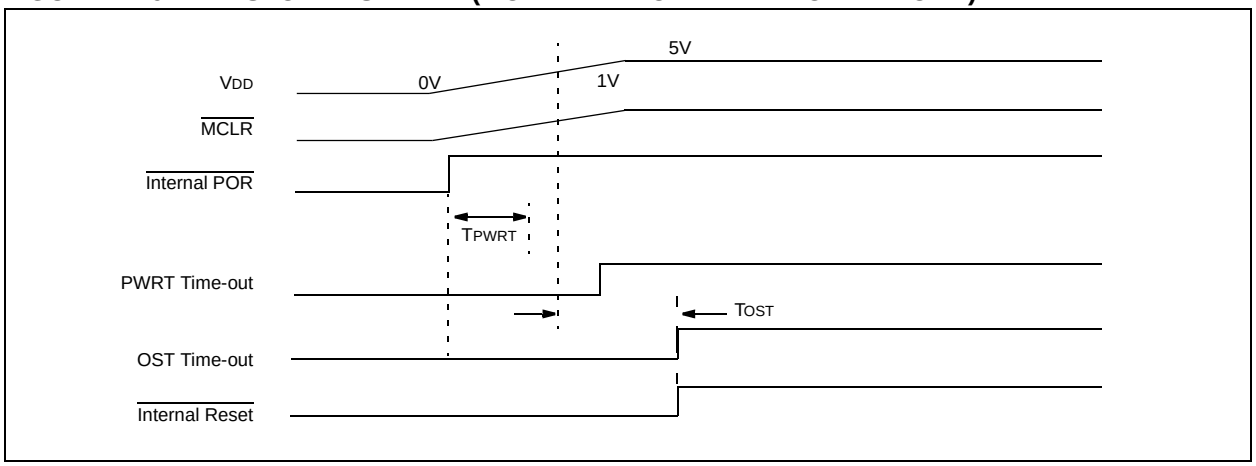

© 2001-2013 Microchip Technology Inc.

14.11 Interrupts

The PIC16F87XA family has up to 15 sources of interrupt. The Interrupt Control register (INTCON) records individual interrupt requests in flag bits. It also has individual and global interrupt enable bits.

Note:	Individual interrupt flag bits are set regardless of the status of their corresponding mask bit or the GIE bit.

A global interrupt enable bit, GIE (INTCON<7>), enables (if set) all unmasked interrupts or disables (if cleared) all interrupts. When bit GIE is enabled and an interrupt's flag bit and mask bit are set, the interrupt will vector immediately. Individual interrupts can be disabled through their corresponding enable bits in various registers. Individual interrupt bits are set regardless of the status of the GIE bit. The GIE bit is cleared on Reset.

The "return from interrupt" instruction, `RETFIE`, exits the interrupt routine, as well as sets the GIE bit, which re-enables interrupts.

The RB0/INT pin interrupt, the RB port change interrupt and the TMR0 overflow interrupt flags are contained in the INTCON register.

The peripheral interrupt flags are contained in the Special Function Registers, PIR1 and PIR2. The corresponding interrupt enable bits are contained in Special Function Registers, PIE1 and PIE2, and the peripheral interrupt enable bit is contained in Special Function Register, INTCON.

When an interrupt is responded to, the GIE bit is cleared to disable any further interrupt, the return address is pushed onto the stack and the PC is loaded with 0004h. Once in the Interrupt Service Routine, the source(s) of the interrupt can be determined by polling the interrupt flag bits. The interrupt flag bit(s) must be cleared in software before re-enabling interrupts to avoid recursive interrupts.

For external interrupt events, such as the INT pin or PORTB change interrupt, the interrupt latency will be three or four instruction cycles. The exact latency depends when the interrupt event occurs. The latency is the same for one or two-cycle instructions. Individual interrupt flag bits are set regardless of the status of their corresponding mask bit, PEIE bit or GIE bit.

FIGURE 14-10: INTERRUPT LOGIC

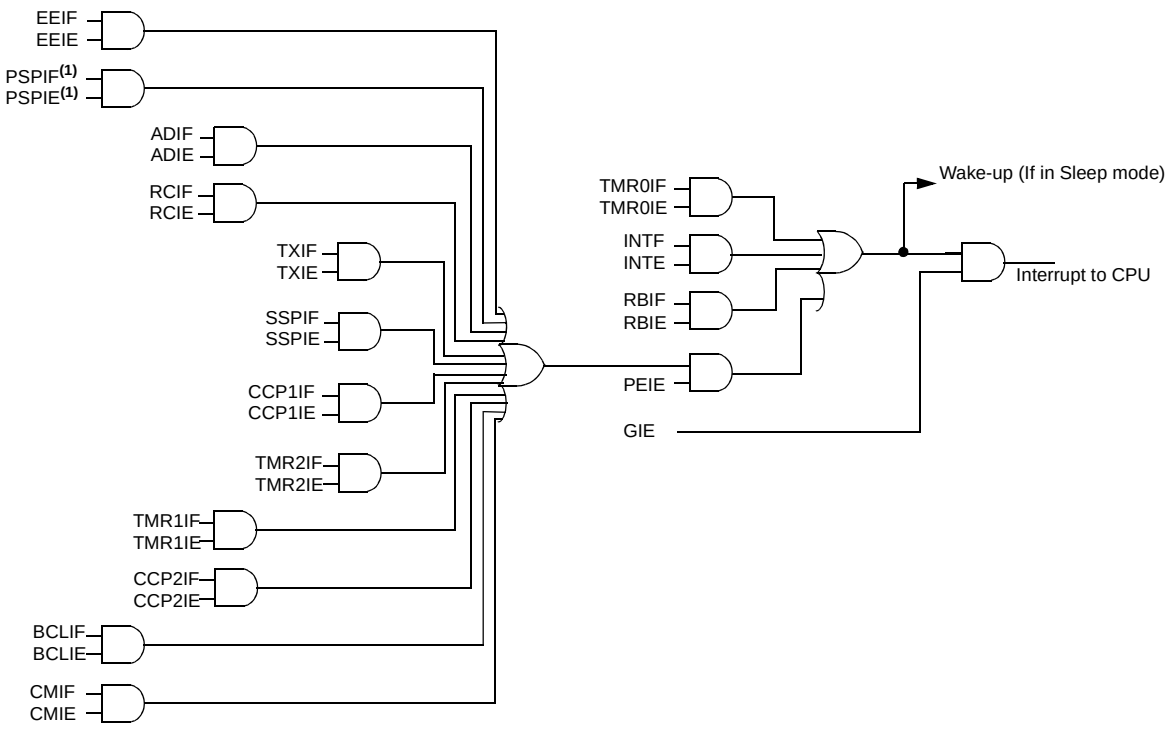

Note 1: PSP interrupt is implemented only on PIC16F874A/877A devices.

14.11.1 INT INTERRUPT

External interrupt on the RB0/INT pin is edge triggered, either rising if bit INTEDG (OPTION_REG<6>) is set or falling if the INTEDG bit is clear. When a valid edge appears on the RB0/INT pin, flag bit, INTF (INTCON<1>), is set. This interrupt can be disabled by clearing enable bit, INTE (INTCON<4>). Flag bit INTF must be cleared in software in the Interrupt Service Routine before re-enabling this interrupt. The INT interrupt can wake-up the processor from Sleep if bit INTE was set prior to going into Sleep. The status of global interrupt enable bit, GIE, decides whether or not the processor branches to the interrupt vector following wake-up. See **Section 14.14 "Power-down Mode (Sleep)"** for details on Sleep mode.

14.11.2 TMR0 INTERRUPT

An overflow (FFh → 00h) in the TMR0 register will set flag bit, TMR0IF (INTCON<2>). The interrupt can be enabled/disabled by setting/clearing enable bit, TMR0IE (INTCON<5>). See **Section 5.0 "Timer0 Module"**.

14.11.3 PORTB INTCON CHANGE

An input change on PORTB<7:4> sets flag bit, RBIF (INTCON<0>). The interrupt can be enabled/disabled by setting/clearing enable bit, RBIE (INTCON<4>). See **Section 4.2 "PORTB and the TRISB Register"**.

14.12 Context Saving During Interrupts

During an interrupt, only the return PC value is saved on the stack. Typically, users may wish to save key registers during an interrupt (i.e., W register and Status register). This will have to be implemented in software.

For the PIC16F873A/874A devices, the register W_TEMP must be defined in both Banks 0 and 1 and must be defined at the same offset from the bank base address (i.e., If W_TEMP is defined at 0x20 in Bank 0, it must also be defined at 0xA0 in Bank 1). The registers, PCLATH_TEMP and STATUS_TEMP, are only defined in Bank 0.

Since the upper 16 bytes of each bank are common in the PIC16F876A/877A devices, temporary holding registers, W_TEMP, STATUS_TEMP and PCLATH_TEMP, should be placed in here. These 16 locations don't require banking and therefore, make it easier for context save and restore. The same code shown in Example 14-1 can be used.

EXAMPLE 14-1: SAVING STATUS, W AND PCLATH REGISTERS IN RAM

```
MOVWF    W_TEMP           ;Copy W to TEMP register
SWAPF    STATUS,W         ;Swap status to be saved into W
CLRF     STATUS           ;bank 0, regardless of current bank, Clears IRP,RP1,RP0
MOVWF    STATUS_TEMP      ;Save status to bank zero STATUS_TEMP register
MOVF     PCLATH, W        ;Only required if using pages 1, 2 and/or 3
MOVWF    PCLATH_TEMP      ;Save PCLATH into W
CLRF     PCLATH           ;Page zero, regardless of current page
:
:(ISR)                    ;(Insert user code here)
:
MOVF     PCLATH_TEMP, W   ;Restore PCLATH
MOVWF    PCLATH           ;Move W into PCLATH
SWAPF    STATUS_TEMP,W    ;Swap STATUS_TEMP register into W
                          ;(sets bank to original state)
MOVWF    STATUS           ;Move W into STATUS register
SWAPF    W_TEMP,F         ;Swap W_TEMP
SWAPF    W_TEMP,W         ;Swap W_TEMP into W
```


© 2001-2013 Microchip Technology Inc.

14.13 Watchdog Timer (WDT)

The Watchdog Timer is a free running, on-chip RC oscillator which does not require any external components. This RC oscillator is separate from the RC oscillator of the OSC1/CLKI pin. That means that the WDT will run even if the clock on the OSC1/CLKI and OSC2/CLKO pins of the device has been stopped, for example, by execution of a `SLEEP` instruction.

During normal operation, a WDT time-out generates a device Reset (Watchdog Timer Reset). If the device is in Sleep mode, a WDT time-out causes the device to wake-up and continue with normal operation (Watchdog Timer Wake-up). The $\overline{TO}$ bit in the Status register will be cleared upon a Watchdog Timer time-out.

The WDT can be permanently disabled by clearing configuration bit, WDTE (**Section 14.1 "Configuration Bits"**).

WDT time-out period values may be found in **Section 17.0 "Electrical Characteristics"** under parameter #31. Values for the WDT prescaler (actually a postscaler but shared with the Timer0 prescaler) may be assigned using the OPTION_REG register.

> **Note 1:** The `CLRWDT` and `SLEEP` instructions clear the WDT and the postscaler, if assigned to the WDT and prevent it from timing out and generating a device Reset condition.
>
> **2:** When a `CLRWDT` instruction is executed and the prescaler is assigned to the WDT, the prescaler count will be cleared but the prescaler assignment is not changed.

FIGURE 14-11: WATCHDOG TIMER BLOCK DIAGRAM

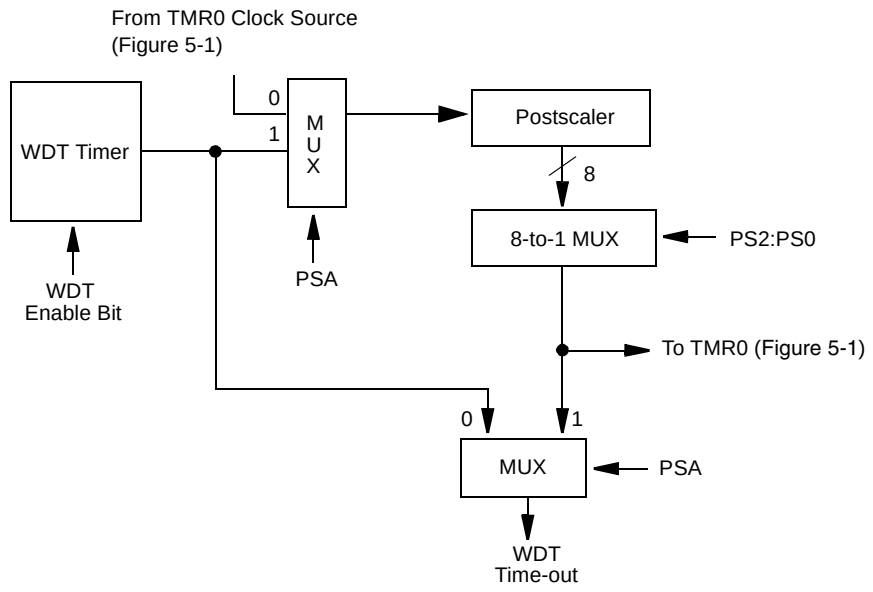

Note: PSA and PS2:PS0 are bits in the OPTION_REG register.

TABLE 14-7: SUMMARY OF WATCHDOG TIMER REGISTERS

Address	Name	Bit 7	Bit 6	Bit 5	Bit 4	Bit 3	Bit 2	Bit 1	Bit 0
2007h	Config. bits	**(1)**	BODEN(1)	CP1	CP0	$\overline{PWRTE}$(1)	WDTE	FOSC1	FOSC0
81h, 181h	OPTION_REG	RBPU	INTEDG	T0CS	T0SE	PSA	PS2	PS1	PS0

Legend: Shaded cells are not used by the Watchdog Timer.

Note 1: See Register 14-1 for operation of these bits.

14.14 Power-down Mode (Sleep)

Power-down mode is entered by executing a SLEEP instruction.

If enabled, the Watchdog Timer will be cleared but keeps running, the $\overline{PD}$ bit (Status<3>) is cleared, the $\overline{TO}$ (Status<4>) bit is set and the oscillator driver is turned off. The I/O ports maintain the status they had before the SLEEP instruction was executed (driving high, low or high-impedance).

For lowest current consumption in this mode, place all I/O pins at either V_{DD} or V_{SS}, ensure no external circuitry is drawing current from the I/O pin, power-down the A/D and disable external clocks. Pull all I/O pins that are high-impedance inputs, high or low externally, to avoid switching currents caused by floating inputs. The T0CKI input should also be at V_{DD} or V_{SS} for lowest current consumption. The contribution from on-chip pull-ups on PORTB should also be considered.

The $\overline{MCLR}$ pin must be at a logic high level (V_{IHMC}).

14.14.1 WAKE-UP FROM SLEEP

The device can wake-up from Sleep through one of the following events:

1. External Reset input on $\overline{MCLR}$ pin.
2. Watchdog Timer wake-up (if WDT was enabled).
3. Interrupt from INT pin, RB port change or peripheral interrupt.

External $\overline{MCLR}$ Reset will cause a device Reset. All other events are considered a continuation of program execution and cause a “wake-up”. The $\overline{TO}$ and $\overline{PD}$ bits in the Status register can be used to determine the cause of device Reset. The $\overline{PD}$ bit, which is set on power-up, is cleared when Sleep is invoked. The $\overline{TO}$ bit is cleared if a WDT time-out occurred and caused wake-up.

The following peripheral interrupts can wake the device from Sleep:

1. PSP read or write (PIC16F874/877 only).
2. TMR1 interrupt. Timer1 must be operating as an asynchronous counter.
3. CCP Capture mode interrupt.
4. Special event trigger (Timer1 in Asynchronous mode using an external clock).
5. SSP (Start/Stop) bit detect interrupt.
6. SSP transmit or receive in Slave mode (SPI/I^2C).
7. USART RX or TX (Synchronous Slave mode).
8. A/D conversion (when A/D clock source is RC).
9. EEPROM write operation completion.
10. Comparator output changes state.

Other peripherals cannot generate interrupts since during Sleep, no on-chip clocks are present.

When the SLEEP instruction is being executed, the next instruction (PC + 1) is prefetched. For the device to wake-up through an interrupt event, the corresponding interrupt enable bit must be set (enabled). Wake-up is regardless of the state of the GIE bit. If the GIE bit is clear (disabled), the device continues execution at the instruction after the SLEEP instruction. If the GIE bit is set (enabled), the device executes the instruction after the SLEEP instruction and then branches to the interrupt address (0004h). In cases where the execution of the instruction following SLEEP is not desirable, the user should have a NOP after the SLEEP instruction.

14.14.2 WAKE-UP USING INTERRUPTS

When global interrupts are disabled (GIE cleared) and any interrupt source has both its interrupt enable bit and interrupt flag bit set, one of the following will occur:

- If the interrupt occurs **before** the execution of a SLEEP instruction, the SLEEP instruction will complete as a NOP. Therefore, the WDT and WDT postscaler will not be cleared, the $\overline{TO}$ bit will not be set and $\overline{PD}$ bits will not be cleared.
- If the interrupt occurs **during or after** the execution of a SLEEP instruction, the device will immediately wake-up from Sleep. The SLEEP instruction will be completely executed before the wake-up. Therefore, the WDT and WDT postscaler will be cleared, the $\overline{TO}$ bit will be set and the $\overline{PD}$ bit will be cleared.

Even if the flag bits were checked before executing a SLEEP instruction, it may be possible for flag bits to become set before the SLEEP instruction completes. To determine whether a SLEEP instruction executed, test the $\overline{PD}$ bit. If the $\overline{PD}$ bit is set, the SLEEP instruction was executed as a NOP.

To ensure that the WDT is cleared, a CLRWDT instruction should be executed before a SLEEP instruction.

© 2001-2013 Microchip Technology Inc.

FIGURE 14-12: WAKE-UP FROM SLEEP THROUGH INTERRUPT

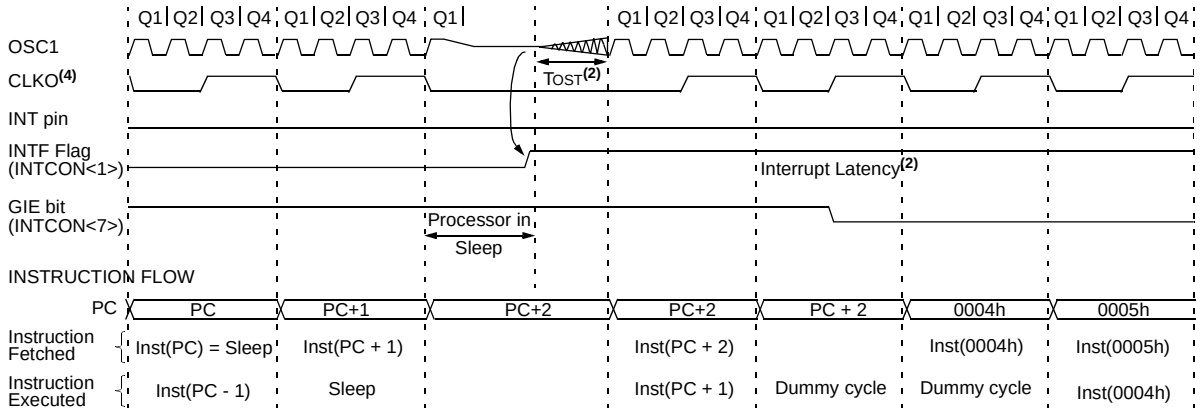

Note 1: XT, HS or LP Oscillator mode assumed.
2: TOST = 1024 TOSC (drawing not to scale). This delay will not be there for RC Oscillator mode.
3: GIE = 1 assumed. In this case, after wake- up, the processor jumps to the interrupt routine. If GIE = 0, execution will continue in-line.
4: CLKO is not available in these oscillator modes but shown here for timing reference.

14.15 In-Circuit Debugger

When the DEBUG bit in the configuration word is programmed to a '0', the in-circuit debugger functionality is enabled. This function allows simple debugging functions when used with MPLAB® ICD. When the microcontroller has this feature enabled, some of the resources are not available for general use. Table 14-8 shows which features are consumed by the background debugger.

TABLE 14-8: DEBUGGER RESOURCES

I/O pins	RB6, RB7
Stack	1 level
Program Memory	Address 0000h must be NOP
	Last 100h words
Data Memory	0x070 (0x0F0, 0x170, 0x1F0) 0x1EB-0x1EF

To use the in-circuit debugger function of the microcontroller, the design must implement In-Circuit Serial Programming connections to $\overline{\text{MCLR}}$/VPP, VDD, GND, RB7 and RB6. This will interface to the in-circuit debugger module available from Microchip or one of the third party development tool companies.

14.16 Program Verification/Code Protection

If the code protection bit(s) have not been programmed, the on-chip program memory can be read out for verification purposes.

14.17 ID Locations

Four memory locations (2000h-2003h) are designated as ID locations, where the user can store checksum or other code identification numbers. These locations are not accessible during normal execution but are readable and writable during program/verify. It is recommended that only the 4 Least Significant bits of the ID location are used.

14.18 In-Circuit Serial Programming

PIC16F87XA microcontrollers can be serially programmed while in the end application circuit. This is simply done with two lines for clock and data and three other lines for power, ground and the programming voltage. This allows customers to manufacture boards with unprogrammed devices and then program the microcontroller just before shipping the product. This also allows the most recent firmware or a custom firmware to be programmed.

When using ICSP, the part must be supplied at 4.5V to 5.5V if a bulk erase will be executed. This includes reprogramming of the code-protect, both from an on state to an off state. For all other cases of ICSP, the part may be programmed at the normal operating voltages. This means calibration values, unique user IDs or user code can be reprogrammed or added.

For complete details of serial programming, please refer to the "*PIC16F87XA Flash Memory Programming Specification*" (DS39589).

14.19 Low-Voltage (Single-Supply) ICSP Programming

The LVP bit of the configuration word enables low-voltage ICSP programming. This mode allows the microcontroller to be programmed via ICSP using a V_{DD} source in the operating voltage range. This only means that V_{PP} does not have to be brought to V_{IHH} but can instead be left at the normal operating voltage. In this mode, the RB3/PGM pin is dedicated to the programming function and ceases to be a general purpose I/O pin. During programming, V_{DD} is applied to the $\overline{MCLR}$ pin. To enter Programming mode, V_{DD} must be applied to the RB3/PGM provided the LVP bit is set. The LVP bit defaults to on ('1') from the factory.

Note 1: The High-Voltage Programming mode is always available, regardless of the state of the LVP bit, by applying V_{IHH} to the $\overline{MCLR}$ pin.

2: While in Low-Voltage ICSP mode, the RB3 pin can no longer be used as a general purpose I/O pin.

3: When using Low-Voltage ICSP Programming (LVP) and the pull-ups on PORTB are enabled, bit 3 in the TRISB register must be cleared to disable the pull-up on RB3 and ensure the proper operation of the device.

4: RB3 should not be allowed to float if LVP is enabled. An external pull-down device should be used to default the device to normal operating mode. If RB3 floats high, the PIC16F87XA device will enter Programming mode.

5: LVP mode is enabled by default on all devices shipped from Microchip. It can be disabled by clearing the LVP bit in the CONFIG register.

6: Disabling LVP will provide maximum compatibility to other PIC16CXXX devices.

If Low-Voltage Programming mode is not used, the LVP bit can be programmed to a '0' and RB3/PGM becomes a digital I/O pin. However, the LVP bit may only be programmed when programming is entered with V_{IHH} on $\overline{MCLR}$. The LVP bit can only be charged when using high voltage on $\overline{MCLR}$.

It should be noted, that once the LVP bit is programmed to '0', only the High-Voltage Programming mode is available and only High-Voltage Programming mode can be used to program the device.

When using low-voltage ICSP, the part must be supplied at 4.5V to 5.5V if a bulk erase will be executed. This includes reprogramming of the code-protect bits from an on state to an off state. For all other cases of low-voltage ICSP, the part may be programmed at the normal operating voltage. This means calibration values, unique user IDs or user code can be reprogrammed or added.

© 2001-2013 Microchip Technology Inc.

15.0 INSTRUCTION SET SUMMARY

The PIC16 instruction set is highly orthogonal and is comprised of three basic categories:

- **Byte-oriented** operations
- **Bit-oriented** operations
- **Literal and control** operations

Each PIC16 instruction is a 14-bit word divided into an **opcode** which specifies the instruction type and one or more **operands** which further specify the operation of the instruction. The formats for each of the categories is presented in Figure 15-1, while the various opcode fields are summarized in Table 15-1.

Table 15-2 lists the instructions recognized by the MPASM™ Assembler. A complete description of each instruction is also available in the PIC® Mid-Range MCU Family Reference Manual (DS33023).

For **byte-oriented** instructions, ‘f’ represents a file register designator and ‘d’ represents a destination designator. The file register designator specifies which file register is to be used by the instruction.

The destination designator specifies where the result of the operation is to be placed. If ‘d’ is zero, the result is placed in the W register. If ‘d’ is one, the result is placed in the file register specified in the instruction.

For **bit-oriented** instructions, ‘b’ represents a bit field designator which selects the bit affected by the operation, while ‘f’ represents the address of the file in which the bit is located.

For **literal and control** operations, ‘k’ represents an eight or eleven-bit constant or literal value

One instruction cycle consists of four oscillator periods; for an oscillator frequency of 4 MHz, this gives a normal instruction execution time of 1 μs. All instructions are executed within a single instruction cycle, unless a conditional test is true, or the program counter is changed as a result of an instruction. When this occurs, the execution takes two instruction cycles with the second cycle executed as a `NOP`.

Note:	To maintain upward compatibility with future PIC16F87XA products, do not use the `OPTION` and `TRIS` instructions.

All instruction examples use the format ‘`0xhh`’ to represent a hexadecimal number, where ‘`h`’ signifies a hexadecimal digit.

15.1 READ-MODIFY-WRITE OPERATIONS

Any instruction that specifies a file register as part of the instruction performs a Read-Modify-Write (R-M-W) operation. The register is read, the data is modified, and the result is stored according to either the instruction or the destination designator ‘d’. A read operation is performed on a register even if the instruction writes to that register.

For example, a “`CLRF PORTB`” instruction will read PORTB, clear all the data bits, then write the result back to PORTB. This example would have the unintended result that the condition that sets the RBIF flag would be cleared.

TABLE 15-1: OPCODE FIELD DESCRIPTIONS

Field	Description
`f`	Register file address (0x00 to 0x7F)
`W`	Working register (accumulator)
`b`	Bit address within an 8-bit file register
`k`	Literal field, constant data or label
`x`	Don't care location (= `0` or `1`). The assembler will generate code with x = `0`. It is the recommended form of use for compatibility with all Microchip software tools.
`d`	Destination select; d = `0`: store result in W, d = `1`: store result in file register f. Default is d = `1`.
`PC`	Program Counter
`TO`	Time-out bit
`PD`	Power-down bit

FIGURE 15-1: GENERAL FORMAT FOR INSTRUCTIONS

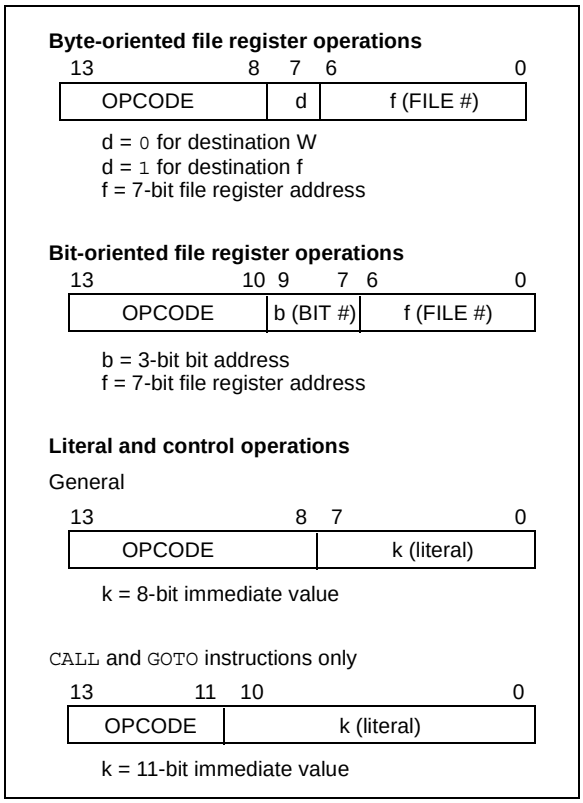

TABLE 15-2: PIC16F87XA INSTRUCTION SET

Mnemonic, Operands		Description	Cycles	14-Bit Opcode MSb			LSb	Status Affected	Notes
BYTE-ORIENTED FILE REGISTER OPERATIONS									
ADDWF	f, d	Add W and f	1	00	0111	dfff	ffff	C,DC,Z	1,2
ANDWF	f, d	AND W with f	1	00	0101	dfff	ffff	Z	1,2
CLRF	f	Clear f	1	00	0001	1fff	ffff	Z	2
CLRW	-	Clear W	1	00	0001	0xxx	xxxx	Z	
COMF	f, d	Complement f	1	00	1001	dfff	ffff	Z	1,2
DECF	f, d	Decrement f	1	00	0011	dfff	ffff	Z	1,2
DECFSZ	f, d	Decrement f, Skip if 0	1(2)	00	1011	dfff	ffff		1,2,3
INCF	f, d	Increment f	1	00	1010	dfff	ffff	Z	1,2
INCFSZ	f, d	Increment f, Skip if 0	1(2)	00	1111	dfff	ffff		1,2,3
IORWF	f, d	Inclusive OR W with f	1	00	0100	dfff	ffff	Z	1,2
MOVF	f, d	Move f	1	00	1000	dfff	ffff	Z	1,2
MOVWF	f	Move W to f	1	00	0000	1fff	ffff		
NOP	-	No Operation	1	00	0000	0xx0	0000		
RLF	f, d	Rotate Left f through Carry	1	00	1101	dfff	ffff	C	1,2
RRF	f, d	Rotate Right f through Carry	1	00	1100	dfff	ffff	C	1,2
SUBWF	f, d	Subtract W from f	1	00	0010	dfff	ffff	C,DC,Z	1,2
SWAPF	f, d	Swap nibbles in f	1	00	1110	dfff	ffff		1,2
XORWF	f, d	Exclusive OR W with f	1	00	0110	dfff	ffff	Z	1,2
BIT-ORIENTED FILE REGISTER OPERATIONS									
BCF	f, b	Bit Clear f	1	01	00bb	bfff	ffff		1,2
BSF	f, b	Bit Set f	1	01	01bb	bfff	ffff		1,2
BTFSC	f, b	Bit Test f, Skip if Clear	1 (2)	01	10bb	bfff	ffff		3
BTFSS	f, b	Bit Test f, Skip if Set	1 (2)	01	11bb	bfff	ffff		3
LITERAL AND CONTROL OPERATIONS									
ADDLW	k	Add Literal and W	1	11	111x	kkkk	kkkk	C,DC,Z	
ANDLW	k	AND Literal with W	1	11	1001	kkkk	kkkk	Z	
CALL	k	Call Subroutine	2	10	0kkk	kkkk	kkkk		
CLRWDT	-	Clear Watchdog Timer	1	00	0000	0110	0100	$\overline{TO}$,$\overline{PD}$	
GOTO	k	Go to Address	2	10	1kkk	kkkk	kkkk		
IORLW	k	Inclusive OR Literal with W	1	11	1000	kkkk	kkkk	Z	
MOVLW	k	Move Literal to W	1	11	00xx	kkkk	kkkk		
RETFIE	-	Return from Interrupt	2	00	0000	0000	1001		
RETLW	k	Return with Literal in W	2	11	01xx	kkkk	kkkk		
RETURN	-	Return from Subroutine	2	00	0000	0000	1000		
SLEEP	-	Go into Standby mode	1	00	0000	0110	0011	$\overline{TO}$,$\overline{PD}$	
SUBLW	k	Subtract W from Literal	1	11	110x	kkkk	kkkk	C,DC,Z	
XORLW	k	Exclusive OR Literal with W	1	11	1010	kkkk	kkkk	Z	

Note 1: When an I/O register is modified as a function of itself (e.g., `MOVF PORTB, 1`), the value used will be that value present on the pins themselves. For example, if the data latch is '`1`' for a pin configured as input and is driven low by an external device, the data will be written back with a '`0`'.

2: If this instruction is executed on the TMR0 register (and where applicable, d = `1`), the prescaler will be cleared if assigned to the Timer0 module.

3: If Program Counter (PC) is modified, or a conditional test is true, the instruction requires two cycles. The second cycle is executed as a `NOP`.

Note: Additional information on the mid-range instruction set is available in the PIC® Mid-Range MCU Family Reference Manual (DS33023).

© 2001-2013 Microchip Technology Inc.

15.2 Instruction Descriptions

ADDLW	Add Literal and W
Syntax:	[*label*] ADDLW k
Operands:	$0 \le k \le 255$
Operation:	(W) + k → (W)
Status Affected:	C, DC, Z
Description:	The contents of the W register are added to the eight-bit literal 'k' and the result is placed in the W register.

ADDWF	Add W and f
Syntax:	[*label*] ADDWF f,d
Operands:	$0 \le f \le 127$ $d \in [0,1]$
Operation:	(W) + (f) → (destination)
Status Affected:	C, DC, Z
Description:	Add the contents of the W register with register 'f'. If 'd' is '0', the result is stored in the W register. If 'd' is '1', the result is stored back in register 'f'.

ANDLW	AND Literal with W
Syntax:	[*label*] ANDLW k
Operands:	$0 \le k \le 255$
Operation:	(W) .AND. (k) → (W)
Status Affected:	Z
Description:	The contents of W register are AND'ed with the eight-bit literal 'k'. The result is placed in the W register.

ANDWF	AND W with f
Syntax:	[*label*] ANDWF f,d
Operands:	$0 \le f \le 127$ $d \in [0,1]$
Operation:	(W) .AND. (f) → (destination)
Status Affected:	Z
Description:	AND the W register with register 'f'. If 'd' is '0', the result is stored in the W register. If 'd' is '1', the result is stored back in register 'f'.

BCF	Bit Clear f
Syntax:	[*label*] BCF f,b
Operands:	$0 \le f \le 127$ $0 \le b \le 7$
Operation:	0 → (f<b>)
Status Affected:	None
Description:	Bit 'b' in register 'f' is cleared.

BSF	Bit Set f
Syntax:	[*label*] BSF f,b
Operands:	$0 \le f \le 127$ $0 \le b \le 7$
Operation:	1 → (f<b>)
Status Affected:	None
Description:	Bit 'b' in register 'f' is set.

BTFSS	Bit Test f, Skip if Set
Syntax:	[*label*] BTFSS f,b
Operands:	$0 \le f \le 127$ $0 \le b < 7$
Operation:	skip if (f<b>) = 1
Status Affected:	None
Description:	If bit 'b' in register 'f' is '0', the next instruction is executed. If bit 'b' is '1', then the next instruction is discarded and a NOP is executed instead, making this a 2 TCY instruction.

BTFSC	Bit Test, Skip if Clear
Syntax:	[*label*] BTFSC f,b
Operands:	$0 \le f \le 127$ $0 \le b \le 7$
Operation:	skip if (f<b>) = 0
Status Affected:	None
Description:	If bit 'b' in register 'f' is '1', the next instruction is executed. If bit 'b' in register 'f' is '0', the next instruction is discarded and a NOP is executed instead, making this a 2 TCY instruction.

CALL	Call Subroutine
Syntax:	[*label*] CALL k
Operands:	$0 \le k \le 2047$
Operation:	(PC)+ 1→ TOS, k → PC<10:0>, (PCLATH<4:3>) → PC<12:11>
Status Affected:	None
Description:	Call Subroutine. First, return address (PC+1) is pushed onto the stack. The eleven-bit immediate address is loaded into PC bits <10:0>. The upper bits of the PC are loaded from PCLATH. `CALL` is a two-cycle instruction.

CLRWDT	Clear Watchdog Timer
Syntax:	[*label*] CLRWDT
Operands:	None
Operation:	00h → WDT 0 → WDT prescaler, 1 → $\overline{TO}$ 1 → $\overline{PD}$
Status Affected:	$\overline{TO}$, $\overline{PD}$
Description:	`CLRWDT` instruction resets the Watchdog Timer. It also resets the prescaler of the WDT. Status bits, $\overline{TO}$ and $\overline{PD}$, are set.

CLRF	Clear f
Syntax:	[*label*] CLRF f
Operands:	$0 \le f \le 127$
Operation:	00h → (f) 1 → Z
Status Affected:	Z
Description:	The contents of register ‘f’ are cleared and the Z bit is set.

COMF	Complement f
Syntax:	[*label*] COMF f,d
Operands:	$0 \le f \le 127$ $d \in [0,1]$
Operation:	$(\bar{f}) \rightarrow$ (destination)
Status Affected:	Z
Description:	The contents of register ‘f’ are complemented. If ‘d’ is ‘`0`’, the result is stored in W. If ‘d’ is ‘`1`’, the result is stored back in register ‘f’.

CLRW	Clear W
Syntax:	[*label*] CLRW
Operands:	None
Operation:	00h → (W) 1 → Z
Status Affected:	Z
Description:	W register is cleared. Zero bit (Z) is set.

DECF	Decrement f
Syntax:	[*label*] DECF f,d
Operands:	$0 \le f \le 127$ $d \in [0,1]$
Operation:	(f) - 1 → (destination)
Status Affected:	Z
Description:	Decrement register ‘f’. If ‘d’ is ‘`0`’, the result is stored in the W register. If ‘d’ is ‘`1`’, the result is stored back in register ‘f’.

© 2001-2013 Microchip Technology Inc.

DECFSZ	Decrement f, Skip if 0
Syntax:	[*label*] DECFSZ f,d
Operands:	$0 \le f \le 127$ $d \in [0,1]$
Operation:	(f) - 1 → (destination); skip if result = 0
Status Affected:	None
Description:	The contents of register 'f' are decremented. If 'd' is '0', the result is placed in the W register. If 'd' is '1', the result is placed back in register 'f'. If the result is '1', the next instruction is executed. If the result is '0', then a NOP is executed instead, making it a 2 TCY instruction.

INCFSZ	Increment f, Skip if 0
Syntax:	[*label*] INCFSZ f,d
Operands:	$0 \le f \le 127$ $d \in [0,1]$
Operation:	(f) + 1 → (destination), skip if result = 0
Status Affected:	None
Description:	The contents of register 'f' are incremented. If 'd' is '0', the result is placed in the W register. If 'd' is '1', the result is placed back in register 'f'. If the result is '1', the next instruction is executed. If the result is '0', a NOP is executed instead, making it a 2 TCY instruction.

GOTO	Unconditional Branch
Syntax:	[*label*] GOTO k
Operands:	$0 \le k \le 2047$
Operation:	k → PC<10:0> PCLATH<4:3> → PC<12:11>
Status Affected:	None
Description:	GOTO is an unconditional branch. The eleven-bit immediate value is loaded into PC bits <10:0>. The upper bits of PC are loaded from PCLATH<4:3>. GOTO is a two-cycle instruction.

IORLW	Inclusive OR Literal with W
Syntax:	[*label*] IORLW k
Operands:	$0 \le k \le 255$
Operation:	(W) .OR. k → (W)
Status Affected:	Z
Description:	The contents of the W register are OR'ed with the eight-bit literal 'k'. The result is placed in the W register.

INCF	Increment f
Syntax:	[*label*] INCF f,d
Operands:	$0 \le f \le 127$ $d \in [0,1]$
Operation:	(f) + 1 → (destination)
Status Affected:	Z
Description:	The contents of register 'f' are incremented. If 'd' is '0', the result is placed in the W register. If 'd' is '1', the result is placed back in register 'f'.

IORWF	Inclusive OR W with f
Syntax:	[*label*] IORWF f,d
Operands:	$0 \le f \le 127$ $d \in [0,1]$
Operation:	(W) .OR. (f) → (destination)
Status Affected:	Z
Description:	Inclusive OR the W register with register 'f'. If 'd' is '0', the result is placed in the W register. If 'd' is '1', the result is placed back in register 'f'.

RLF	Rotate Left f through Carry
Syntax:	[*label*] RLF f,d
Operands:	$0 \le f \le 127$ $d \in [0,1]$
Operation:	See description below
Status Affected:	C
Description:	The contents of register 'f' are rotated one bit to the left through the Carry flag. If 'd' is '0', the result is placed in the W register. If 'd' is '1', the result is stored back in register 'f'.

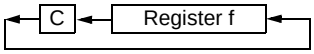

SLEEP	
Syntax:	[*label*] SLEEP
Operands:	None
Operation:	00h → WDT, 0 → WDT prescaler, 1 → $\overline{TO}$, 0 → $\overline{PD}$
Status Affected:	$\overline{TO}$, $\overline{PD}$
Description:	The power-down status bit, $\overline{PD}$, is cleared. Time-out status bit, $\overline{TO}$, is set. Watchdog Timer and its prescaler are cleared. The processor is put into Sleep mode with the oscillator stopped.

RETURN	Return from Subroutine
Syntax:	[*label*] RETURN
Operands:	None
Operation:	TOS → PC
Status Affected:	None
Description:	Return from subroutine. The stack is POPed and the top of the stack (TOS) is loaded into the program counter. This is a two-cycle instruction.

SUBLW	Subtract W from Literal
Syntax:	[*label*] SUBLW k
Operands:	$0 \le k \le 255$
Operation:	k - (W) → (W)
Status Affected:	C, DC, Z
Description:	The W register is subtracted (2's complement method) from the eight-bit literal 'k'. The result is placed in the W register.

RRF	Rotate Right f through Carry
Syntax:	[*label*] RRF f,d
Operands:	$0 \le f \le 127$ $d \in [0,1]$
Operation:	See description below
Status Affected:	C
Description:	The contents of register 'f' are rotated one bit to the right through the Carry flag. If 'd' is '0', the result is placed in the W register. If 'd' is '1', the result is placed back in register 'f'.

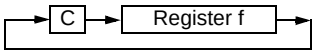

SUBWF	Subtract W from f
Syntax:	[*label*] SUBWF f,d
Operands:	$0 \le f \le 127$ $d \in [0,1]$
Operation:	(f) - (W) → (destination)
Status Affected:	C, DC, Z
Description:	Subtract (2's complement method) W register from register 'f'. If 'd' is '0', the result is stored in the W register. If 'd' is '1', the result is stored back in register 'f'.

© 2001-2013 Microchip Technology Inc.

SWAPF	Swap Nibbles in f
Syntax:	[*label*] SWAPF f,d
Operands:	$0 \le f \le 127$ $d \in [0,1]$
Operation:	(f<3:0>) → (destination<7:4>), (f<7:4>) → (destination<3:0>)
Status Affected:	None
Description:	The upper and lower nibbles of register ‘f’ are exchanged. If ‘d’ is ‘0’, the result is placed in the W register. If ‘d’ is ‘1’, the result is placed in register ‘f’.

XORLW	Exclusive OR Literal with W
Syntax:	[*label*] XORLW k
Operands:	$0 \le k \le 255$
Operation:	(W) .XOR. k → (W)
Status Affected:	Z
Description:	The contents of the W register are XOR’ed with the eight-bit literal ‘k’. The result is placed in the W register.

XORWF	Exclusive OR W with f
Syntax:	[*label*] XORWF f,d
Operands:	$0 \le f \le 127$ $d \in [0,1]$
Operation:	(W) .XOR. (f) → (destination)
Status Affected:	Z
Description:	Exclusive OR the contents of the W register with register ‘f’. If ‘d’ is ‘0’, the result is stored in the W register. If ‘d’ is ‘1’, the result is stored back in register ‘f’.

NOTES:

© 2001-2013 Microchip Technology Inc.

16.0 DEVELOPMENT SUPPORT

The PIC® microcontrollers are supported with a full range of hardware and software development tools:

- Integrated Development Environment
  - MPLAB® IDE Software
- Assemblers/Compilers/Linkers
  - MPASM™ Assembler
  - MPLAB C17 and MPLAB C18 C Compilers
  - MPLINK™ Object Linker/ MPLIB™ Object Librarian
  - MPLAB C30 C Compiler
  - MPLAB ASM30 Assembler/Linker/Library
- Simulators
  - MPLAB SIM Software Simulator
  - MPLAB dsPIC30 Software Simulator
- Emulators
  - MPLAB ICE 2000 In-Circuit Emulator
  - MPLAB ICE 4000 In-Circuit Emulator
- In-Circuit Debugger
  - MPLAB ICD 2
- Device Programmers
  - PRO MATE® II Universal Device Programmer
  - PICSTART® Plus Development Programmer
- Low Cost Demonstration Boards
  - PICDEM™ 1 Demonstration Board
  - PICDEM.net™ Demonstration Board
  - PICDEM 2 Plus Demonstration Board
  - PICDEM 3 Demonstration Board
  - PICDEM 4 Demonstration Board
  - PICDEM 17 Demonstration Board
  - PICDEM 18R Demonstration Board
  - PICDEM LIN Demonstration Board
  - PICDEM USB Demonstration Board
- Evaluation Kits
  - KEELOQ®
  - PICDEM MSC
  - microID®
  - CAN
  - PowerSmart®
  - Analog

16.1 MPLAB Integrated Development Environment Software

The MPLAB IDE software brings an ease of software development previously unseen in the 8/16-bit microcontroller market. The MPLAB IDE is a Windows® based application that contains:

- An interface to debugging tools
  - simulator
  - programmer (sold separately)
  - emulator (sold separately)
  - in-circuit debugger (sold separately)
- A full-featured editor with color coded context
- A multiple project manager
- Customizable data windows with direct edit of contents
- High level source code debugging
- Mouse over variable inspection
- Extensive on-line help

The MPLAB IDE allows you to:

- Edit your source files (either assembly or C)
- One touch assemble (or compile) and download to PIC MCU emulator and simulator tools (automatically updates all project information)
- Debug using:
  - source files (assembly or C)
  - absolute listing file (mixed assembly and C)
  - machine code

MPLAB IDE supports multiple debugging tools in a single development paradigm, from the cost effective simulators, through low cost in-circuit debuggers, to full-featured emulators. This eliminates the learning curve when upgrading to tools with increasing flexibility and power.

16.2 MPASM Assembler

The MPASM assembler is a full-featured, universal macro assembler for all PIC MCUs.

The MPASM assembler generates relocatable object files for the MPLINK object linker, Intel® standard HEX files, MAP files to detail memory usage and symbol reference, absolute LST files that contain source lines and generated machine code and COFF files for debugging.

The MPASM assembler features include:

- Integration into MPLAB IDE projects
- User defined macros to streamline assembly code
- Conditional assembly for multi-purpose source files
- Directives that allow complete control over the assembly process

16.3 MPLAB C17 and MPLAB C18 C Compilers

The MPLAB C17 and MPLAB C18 Code Development Systems are complete ANSI C compilers for Microchip's PIC17CXXX and PIC18CXXX family of microcontrollers. These compilers provide powerful integration capabilities, superior code optimization and ease of use not found with other compilers.

For easy source level debugging, the compilers provide symbol information that is optimized to the MPLAB IDE debugger.

16.4 MPLINK Object Linker/ MPLIB Object Librarian

The MPLINK object linker combines relocatable objects created by the MPASM assembler and the MPLAB C17 and MPLAB C18 C compilers. It can link relocatable objects from precompiled libraries, using directives from a linker script.

The MPLIB object librarian manages the creation and modification of library files of pre-compiled code. When a routine from a library is called from a source file, only the modules that contain that routine will be linked in with the application. This allows large libraries to be used efficiently in many different applications.

The object linker/library features include:

- Efficient linking of single libraries instead of many smaller files
- Enhanced code maintainability by grouping related modules together
- Flexible creation of libraries with easy module listing, replacement, deletion and extraction

16.5 MPLAB C30 C Compiler

The MPLAB C30 C compiler is a full-featured, ANSI compliant, optimizing compiler that translates standard ANSI C programs into dsPIC30F assembly language source. The compiler also supports many command-line options and language extensions to take full advantage of the dsPIC30F device hardware capabilities, and afford fine control of the compiler code generator.

MPLAB C30 is distributed with a complete ANSI C standard library. All library functions have been validated and conform to the ANSI C library standard. The library includes functions for string manipulation, dynamic memory allocation, data conversion, time-keeping, and math functions (trigonometric, exponential and hyperbolic). The compiler provides symbolic information for high level source debugging with the MPLAB IDE.

16.6 MPLAB ASM30 Assembler, Linker, and Librarian

MPLAB ASM30 assembler produces relocatable machine code from symbolic assembly language for dsPIC30F devices. MPLAB C30 compiler uses the assembler to produce it's object file. The assembler generates relocatable object files that can then be archived or linked with other relocatable object files and archives to create an executable file. Notable features of the assembler include:

- Support for the entire dsPIC30F instruction set
- Support for fixed-point and floating-point data
- Command line interface
- Rich directive set
- Flexible macro language
- MPLAB IDE compatibility

16.7 MPLAB SIM Software Simulator

The MPLAB SIM software simulator allows code development in a PC hosted environment by simulating the PIC series microcontrollers on an instruction level. On any given instruction, the data areas can be examined or modified and stimuli can be applied from a file, or user defined key press, to any pin. The execution can be performed in Single-Step, Execute Until Break, or Trace mode.

The MPLAB SIM simulator fully supports symbolic debugging using the MPLAB C17 and MPLAB C18 C Compilers, as well as the MPASM assembler. The software simulator offers the flexibility to develop and debug code outside of the laboratory environment, making it an excellent, economical software development tool.

16.8 MPLAB SIM30 Software Simulator

The MPLAB SIM30 software simulator allows code development in a PC hosted environment by simulating the dsPIC30F series microcontrollers on an instruction level. On any given instruction, the data areas can be examined or modified and stimuli can be applied from a file, or user defined key press, to any of the pins.

The MPLAB SIM30 simulator fully supports symbolic debugging using the MPLAB C30 C Compiler and MPLAB ASM30 assembler. The simulator runs in either a Command Line mode for automated tasks, or from MPLAB IDE. This high speed simulator is designed to debug, analyze and optimize time intensive DSP routines.

© 2001-2013 Microchip Technology Inc.

16.9 MPLAB ICE 2000 High Performance Universal In-Circuit Emulator

The MPLAB ICE 2000 universal in-circuit emulator is intended to provide the product development engineer with a complete microcontroller design tool set for PIC microcontrollers. Software control of the MPLAB ICE 2000 in-circuit emulator is advanced by the MPLAB Integrated Development Environment, which allows editing, building, downloading and source debugging from a single environment.

The MPLAB ICE 2000 is a full-featured emulator system with enhanced trace, trigger and data monitoring features. Interchangeable processor modules allow the system to be easily reconfigured for emulation of different processors. The universal architecture of the MPLAB ICE in-circuit emulator allows expansion to support new PIC microcontrollers.

The MPLAB ICE 2000 in-circuit emulator system has been designed as a real-time emulation system with advanced features that are typically found on more expensive development tools. The PC platform and Microsoft® Windows 32-bit operating system were chosen to best make these features available in a simple, unified application.

16.10 MPLAB ICE 4000 High Performance Universal In-Circuit Emulator

The MPLAB ICE 4000 universal in-circuit emulator is intended to provide the product development engineer with a complete microcontroller design tool set for high-end PIC microcontrollers. Software control of the MPLAB ICE in-circuit emulator is provided by the MPLAB Integrated Development Environment, which allows editing, building, downloading and source debugging from a single environment.

The MPLAB ICD 4000 is a premium emulator system, providing the features of MPLAB ICE 2000, but with increased emulation memory and high speed performance for dsPIC30F and PIC18XXXX devices. Its advanced emulator features include complex triggering and timing, up to 2 Mb of emulation memory, and the ability to view variables in real-time.

The MPLAB ICE 4000 in-circuit emulator system has been designed as a real-time emulation system with advanced features that are typically found on more expensive development tools. The PC platform and Microsoft Windows 32-bit operating system were chosen to best make these features available in a simple, unified application.

16.11 MPLAB ICD 2 In-Circuit Debugger

Microchip's In-Circuit Debugger, MPLAB ICD 2, is a powerful, low-cost, run-time development tool, connecting to the host PC via an RS-232 or high-speed USB interface. This tool is based on the Flash PIC MCUs and can be used to develop for these and other PIC microcontrollers. The MPLAB ICD 2 utilizes the in-circuit debugging capability built into the Flash devices. This feature, along with Microchip's In-Circuit Serial Programming™ (ICSP™) protocol, offers cost effective in-circuit Flash debugging from the graphical user interface of the MPLAB Integrated Development Environment. This enables a designer to develop and debug source code by setting breakpoints, single-stepping and watching variables, CPU status and peripheral registers. Running at full speed enables testing hardware and applications in real-time. MPLAB ICD 2 also serves as a development programmer for selected PIC devices.

16.12 PRO MATE II Universal Device Programmer

The PRO MATE II is a universal, CE compliant device programmer with programmable voltage verification at V_{DDMIN} and V_{DDMAX} for maximum reliability. It features an LCD display for instructions and error messages and a modular detachable socket assembly to support various package types. In Stand-Alone mode, the PRO MATE II device programmer can read, verify, and program PIC devices without a PC connection. It can also set code protection in this mode.

16.13 PICSTART Plus Development Programmer

The PICSTART Plus development programmer is an easy-to-use, low-cost, prototype programmer. It connects to the PC via a COM (RS-232) port. MPLAB Integrated Development Environment software makes using the programmer simple and efficient. The PICSTART Plus development programmer supports most PIC devices up to 40 pins. Larger pin count devices, such as the PIC16C92X and PIC17C76X, may be supported with an adapter socket. The PICSTART Plus development programmer is CE compliant.

© 2001-2013 Microchip Technology Inc.

16.14 PICDEM 1 PIC MCU Demonstration Board

The PICDEM 1 demonstration board demonstrates the capabilities of the PIC16C5X (PIC16C54 to PIC16C58A), PIC16C61, PIC16C62X, PIC16C71, PIC16C8X, PIC17C42, PIC17C43 and PIC17C44. All necessary hardware and software is included to run basic demo programs. The sample microcontrollers provided with the PICDEM 1 demonstration board can be programmed with a PRO MATE II device programmer, or a PICSTART Plus development programmer. The PICDEM 1 demonstration board can be connected to the MPLAB ICE in-circuit emulator for testing. A prototype area extends the circuitry for additional application components. Features include an RS-232 interface, a potentiometer for simulated analog input, push button switches and eight LEDs.

16.15 PICDEM.net Internet/Ethernet Demonstration Board

The PICDEM.net demonstration board is an Internet/Ethernet demonstration board using the PIC18F452 microcontroller and TCP/IP firmware. The board supports any 40-pin DIP device that conforms to the standard pinout used by the PIC16F877 or PIC18C452. This kit features a user friendly TCP/IP stack, web server with HTML, a 24L256 Serial EEPROM for Xmodem download to web pages into Serial EEPROM, ICSP/MPLAB ICD 2 interface connector, an Ethernet interface, RS-232 interface, and a 16 x 2 LCD display. Also included is the book and CD-ROM *"TCP/IP Lean, Web Servers for Embedded Systems,"* by Jeremy Bentham.

16.16 PICDEM 2 Plus Demonstration Board

The PICDEM 2 Plus demonstration board supports many 18-, 28-, and 40-pin microcontrollers, including PIC16F87X and PIC18FXX2 devices. All the necessary hardware and software is included to run the demonstration programs. The sample microcontrollers provided with the PICDEM 2 demonstration board can be programmed with a PRO MATE II device programmer, PICSTART Plus development programmer, or MPLAB ICD 2 with a Universal Programmer Adapter. The MPLAB ICD 2 and MPLAB ICE in-circuit emulators may also be used with the PICDEM 2 demonstration board to test firmware. A prototype area extends the circuitry for additional application components. Some of the features include an RS-232 interface, a 2 x 16 LCD display, a piezo speaker, an on-board temperature sensor, four LEDs, and sample PIC18F452 and PIC16F877 Flash microcontrollers.

16.17 PICDEM 3 PIC16C92X Demonstration Board

The PICDEM 3 demonstration board supports the PIC16C923 and PIC16C924 in the PLCC package. All the necessary hardware and software is included to run the demonstration programs.

16.18 PICDEM 4 8/14/18-Pin Demonstration Board

The PICDEM 4 can be used to demonstrate the capabilities of the 8, 14, and 18-pin PIC16XXXX and PIC18XXXX MCUs, including the PIC16F818/819, PIC16F87/88, PIC16F62XA and the PIC18F1320 family of microcontrollers. PICDEM 4 is intended to showcase the many features of these low pin count parts, including LIN and Motor Control using ECCP. Special provisions are made for low power operation with the supercapacitor circuit, and jumpers allow on-board hardware to be disabled to eliminate current draw in this mode. Included on the demo board are provisions for Crystal, RC or Canned Oscillator modes, a five volt regulator for use with a nine volt wall adapter or battery, DB-9 RS-232 interface, ICD connector for programming via ICSP and development with MPLAB ICD 2, 2x16 liquid crystal display, PCB footprints for H-Bridge motor driver, LIN transceiver and EEPROM. Also included are: header for expansion, eight LEDs, four potentiometers, three push buttons and a prototyping area. Included with the kit is a PIC16F627A and a PIC18F1320. Tutorial firmware is included along with the User's Guide.

16.19 PICDEM 17 Demonstration Board

The PICDEM 17 demonstration board is an evaluation board that demonstrates the capabilities of several Microchip microcontrollers, including PIC17C752, PIC17C756A, PIC17C762 and PIC17C766. A programmed sample is included. The PRO MATE II device programmer, or the PICSTART Plus development programmer, can be used to reprogram the device for user tailored application development. The PICDEM 17 demonstration board supports program download and execution from external on-board Flash memory. A generous prototype area is available for user hardware expansion.

© 2001-2013 Microchip Technology Inc.

16.20 PICDEM 18R PIC18C601/801 Demonstration Board

The PICDEM 18R demonstration board serves to assist development of the PIC18C601/801 family of Microchip microcontrollers. It provides hardware implementation of both 8-bit Multiplexed/Demultiplexed and 16-bit Memory modes. The board includes 2 Mb external Flash memory and 128 Kb SRAM memory, as well as serial EEPROM, allowing access to the wide range of memory types supported by the PIC18C601/801.

16.21 PICDEM LIN PIC16C43X Demonstration Board

The powerful LIN hardware and software kit includes a series of boards and three PIC microcontrollers. The small footprint PIC16C432 and PIC16C433 are used as slaves in the LIN communication and feature on-board LIN transceivers. A PIC16F874 Flash microcontroller serves as the master. All three microcontrollers are programmed with firmware to provide LIN bus communication.

16.22 PICkit™ 1 Flash Starter Kit

A complete “development system in a box”, the PICkit Flash Starter Kit includes a convenient multi-section board for programming, evaluation and development of 8/14-pin Flash PIC® microcontrollers. Powered via USB, the board operates under a simple Windows GUI. The PICkit 1 Starter Kit includes the user's guide (on CD ROM), PICkit 1 tutorial software and code for various applications. Also included are MPLAB® IDE (Integrated Development Environment) software, software and hardware “Tips 'n Tricks for 8-pin Flash PIC® Microcontrollers” Handbook and a USB Interface Cable. Supports all current 8/14-pin Flash PIC microcontrollers, as well as many future planned devices.

16.23 PICDEM USB PIC16C7X5 Demonstration Board

The PICDEM USB Demonstration Board shows off the capabilities of the PIC16C745 and PIC16C765 USB microcontrollers. This board provides the basis for future USB products.

16.24 Evaluation and Programming Tools

In addition to the PICDEM series of circuits, Microchip has a line of evaluation kits and demonstration software for these products.

- KEELOQ evaluation and programming tools for Microchip’s HCS Secure Data Products
- CAN developers kit for automotive network applications
- Analog design boards and filter design software
- PowerSmart battery charging evaluation/ calibration kits
- IrDA® development kit
- microID development and rfLab™ development software
- SEEVAL® designer kit for memory evaluation and endurance calculations
- PICDEM MSC demo boards for Switching mode power supply, high power IR driver, delta sigma ADC, and flow rate sensor

Check the Microchip web page and the latest Product Line Card for the complete list of demonstration and evaluation kits.

NOTES:

© 2001-2013 Microchip Technology Inc.

17.0 ELECTRICAL CHARACTERISTICS

Absolute Maximum Ratings †

Ambient temperature under bias ..... -55 to +125°C

Storage temperature ..... -65°C to +150°C

Voltage on any pin with respect to V_{SS} (except V_{DD}, $\overline{MCLR}$. and RA4) ..... -0.3V to (V_{DD} + 0.3V)

Voltage on V_{DD} with respect to V_{SS} ..... -0.3 to +7.5V

Voltage on $\overline{MCLR}$ with respect to V_{SS} **(Note 2)** ..... 0 to +14V

Voltage on RA4 with respect to Vss ..... 0 to +8.5V

Total power dissipation **(Note 1)** 1.0W

Maximum current out of V_{SS} pin ..... 300 mA

Maximum current into V_{DD} pin ..... 250 mA

Input clamp current, I_{IK} (V_I < 0 or V_I > V_{DD}) ..... ± 20 mA

Output clamp current, I_{OK} (V_O < 0 or V_O > V_{DD}) ..... ± 20 mA

Maximum output current sunk by any I/O pin ..... 25 mA

Maximum output current sourced by any I/O pin ..... 25 mA

Maximum current sunk by PORTA, PORTB and PORTE (combined) **(Note 3)** ..... 200 mA

Maximum current sourced by PORTA, PORTB and PORTE (combined) **(Note 3)** ..... 200 mA

Maximum current sunk by PORTC and PORTD (combined) **(Note 3)** ..... 200 mA

Maximum current sourced by PORTC and PORTD (combined) **(Note 3)** ..... 200 mA

Note 1: Power dissipation is calculated as follows: Pdis = V_{DD} x {I_{DD} - ∑ I_{OH}} + ∑ {(V_{DD} - V_{OH}) x I_{OH}} + ∑(Vol x I_{OL})

2: Voltage spikes below V_{SS} at the $\overline{MCLR}$ pin, inducing currents greater than 80 mA, may cause latch-up. Thus, a series resistor of 50-100Ω should be used when applying a “low” level to the $\overline{MCLR}$ pin rather than pulling this pin directly to V_{SS}.

3: PORTD and PORTE are not implemented on PIC16F873A/876A devices.

† NOTICE: Stresses above those listed under “Absolute Maximum Ratings” may cause permanent damage to the device. This is a stress rating only and functional operation of the device at those or any other conditions above those indicated in the operation listings of this specification is not implied. Exposure to maximum rating conditions for extended periods may affect device reliability.

FIGURE 17-1: PIC16F87XA VOLTAGE-FREQUENCY GRAPH (INDUSTRIAL, EXTENDED)

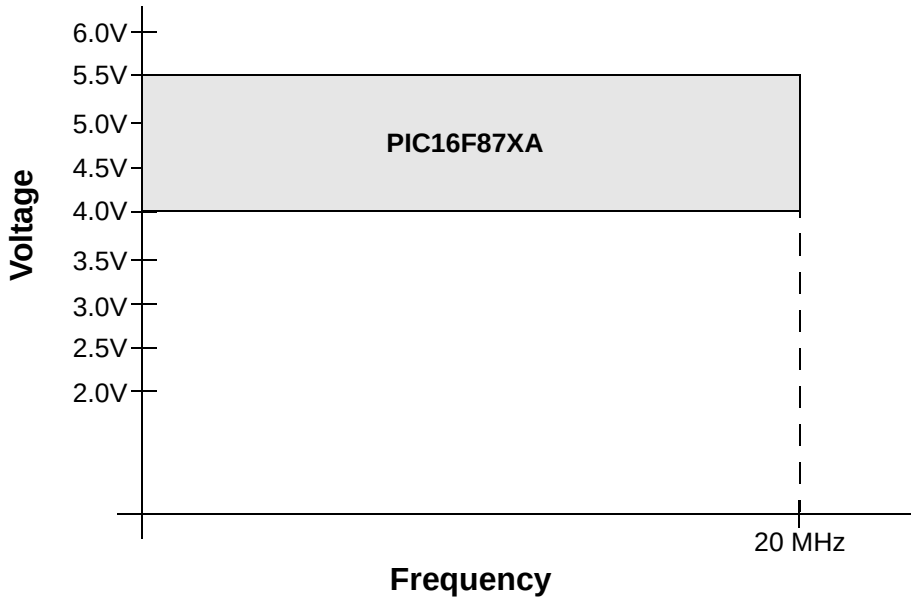

FIGURE 17-2: PIC16LF87XA VOLTAGE-FREQUENCY GRAPH (INDUSTRIAL)

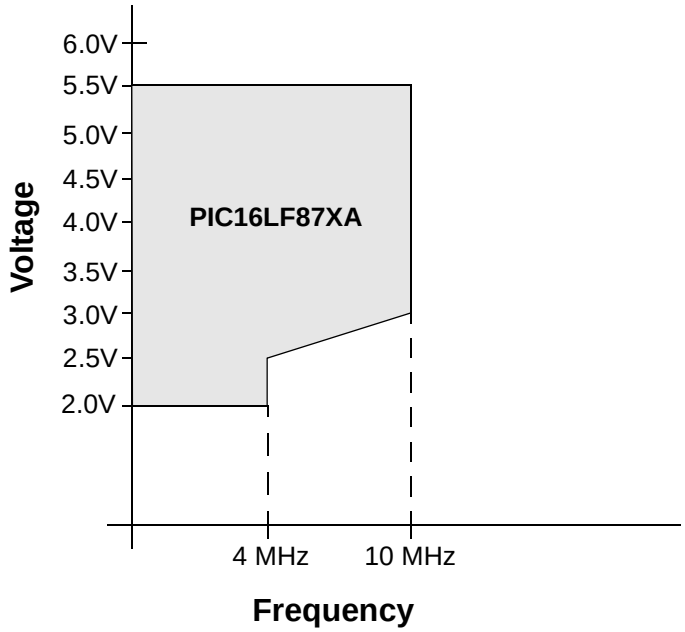

F_{MAX} = (6.0 MHz/V) ($V_{DDAPPMIN}$ – 2.0V) + 4 MHz

Note 1: $V_{DDAPPMIN}$ is the minimum voltage of the PIC® device in the application.

2: F_{MAX} has a maximum frequency of 10 MHz.

© 2001-2013 Microchip Technology Inc.

17.1 DC Characteristics: PIC16F873A/874A/876A/877A (Industrial, Extended) PIC16LF873A/874A/876A/877A (Industrial)

PIC16LF873A/874A/876A/877A (Industrial)	**Standard Operating Conditions (unless otherwise stated)** Operating temperature -40°C ≤ TA ≤ +85°C for industrial
PIC16F873A/874A/876A/877A (Industrial, Extended)	**Standard Operating Conditions (unless otherwise stated)** Operating temperature -40°C ≤ TA ≤ +85°C for industrial -40°C ≤ TA ≤ +125°C for extended

Param No.	Symbol	Characteristic/ Device	Min	Typ†	Max	Units	Conditions
	VDD	**Supply Voltage**					
D001		16LF87XA	2.0	—	5.5	V	All configurations (DC to 10 MHz)
D001		16F87XA	4.0	—	5.5	V	All configurations
D001A			VBOR		5.5	V	BOR enabled, FMAX = 14 MHz(7)
D002	VDR	**RAM Data Retention Voltage(1)**	—	1.5	—	V	
D003	VPOR	**VDD Start Voltage** to ensure internal Power-on Reset signal	—	VSS	—	V	See **Section 14.5 "Power-on Reset (POR)"** for details
D004	SVDD	**VDD Rise Rate** to ensure internal Power-on Reset signal	0.05	—	—	V/ms	See **Section 14.5 "Power-on Reset (POR)"** for details
D005	VBOR	**Brown-out Reset Voltage**	3.65	4.0	4.35	V	BODEN bit in configuration word enabled

Legend: Rows with standard voltage device data only are shaded for improved readability.

† Data in "Typ" column is at 5V, 25°C, unless otherwise stated. These parameters are for design guidance only and are not tested.

Note 1: This is the limit to which VDD can be lowered without losing RAM data.

2: The supply current is mainly a function of the operating voltage and frequency. Other factors, such as I/O pin loading, switching rate, oscillator type, internal code execution pattern and temperature, also have an impact on the current consumption.
The test conditions for all IDD measurements in active operation mode are:
OSC1 = external square wave, from rail-to-rail; all I/O pins tri-stated, pulled to VDD;
MCLR = VDD; WDT enabled/disabled as specified.

3: The power-down current in Sleep mode does not depend on the oscillator type. Power-down current is measured with the part in Sleep mode, with all I/O pins in high-impedance state and tied to VDD and VSS.

4: For RC osc configuration, current through REXT is not included. The current through the resistor can be estimated by the formula Ir = VDD/2REXT (mA) with REXT in kΩ.

5: Timer1 oscillator (when enabled) adds approximately 20 μA to the specification. This value is from characterization and is for design guidance only. This is not tested.

6: The Δ current is the additional current consumed when this peripheral is enabled. This current should be added to the base IDD or IPD measurement.

7: When BOR is enabled, the device will operate correctly until the VBOR voltage trip point is reached.

17.1 DC Characteristics: PIC16F873A/874A/876A/877A (Industrial, Extended) PIC16LF873A/874A/876A/877A (Industrial) (Continued)

PIC16LF873A/874A/876A/877A (Industrial)	**Standard Operating Conditions (unless otherwise stated)** Operating temperature -40°C ≤ TA ≤ +85°C for industrial
PIC16F873A/874A/876A/877A (Industrial, Extended)	**Standard Operating Conditions (unless otherwise stated)** Operating temperature -40°C ≤ TA ≤ +85°C for industrial -40°C ≤ TA ≤ +125°C for extended

Param No.	Symbol	Characteristic/ Device	Min	Typ†	Max	Units	Conditions
	IDD	**Supply Current(2,5)**					
D010		16LF87XA	—	0.6	2.0	mA	XT, RC osc configurations, FOSC = 4 MHz, VDD = 3.0V
D010		16F87XA	—	1.6	4	mA	XT, RC osc configurations, FOSC = 4 MHz, VDD = 5.5V
D010A		16LF87XA	—	20	35	μA	LP osc configuration, FOSC = 32 kHz, VDD = 3.0V, WDT disabled
D013		16F87XA	—	7	15	mA	HS osc configuration, FOSC = 20 MHz, VDD = 5.5V
D015	ΔIBOR	**Brown-out Reset Current(6)**	—	85	200	μA	BOR enabled, VDD = 5.0V

Legend: Rows with standard voltage device data only are shaded for improved readability.

† Data in “Typ” column is at 5V, 25°C, unless otherwise stated. These parameters are for design guidance only and are not tested.

Note 1: This is the limit to which VDD can be lowered without losing RAM data.

2: The supply current is mainly a function of the operating voltage and frequency. Other factors, such as I/O pin loading, switching rate, oscillator type, internal code execution pattern and temperature, also have an impact on the current consumption.
The test conditions for all IDD measurements in active operation mode are:
OSC1 = external square wave, from rail-to-rail; all I/O pins tri-stated, pulled to VDD;
MCLR = VDD; WDT enabled/disabled as specified.

3: The power-down current in Sleep mode does not depend on the oscillator type. Power-down current is measured with the part in Sleep mode, with all I/O pins in high-impedance state and tied to VDD and VSS.

4: For RC osc configuration, current through REXT is not included. The current through the resistor can be estimated by the formula Ir = VDD/2REXT (mA) with REXT in kΩ.

5: Timer1 oscillator (when enabled) adds approximately 20 μA to the specification. This value is from characterization and is for design guidance only. This is not tested.

6: The Δ current is the additional current consumed when this peripheral is enabled. This current should be added to the base IDD or IPD measurement.

7: When BOR is enabled, the device will operate correctly until the VBOR voltage trip point is reached.

© 2001-2013 Microchip Technology Inc.

17.1 DC Characteristics: PIC16F873A/874A/876A/877A (Industrial, Extended) PIC16LF873A/874A/876A/877A (Industrial) (Continued)

PIC16LF873A/874A/876A/877A (Industrial)	**Standard Operating Conditions (unless otherwise stated)** Operating temperature -40°C ≤ TA ≤ +85°C for industrial
PIC16F873A/874A/876A/877A (Industrial, Extended)	**Standard Operating Conditions (unless otherwise stated)** Operating temperature -40°C ≤ TA ≤ +85°C for industrial -40°C ≤ TA ≤ +125°C for extended

Param No.	Symbol	Characteristic/ Device	Min	Typ†	Max	Units	Conditions
	IPD	**Power-down Current(3,5)**					
D020		16LF87XA	—	7.5	30	μA	VDD = 3.0V, WDT enabled, -40°C to +85°C
D020		16F87XA	—	10.5	42 60	μA μA	VDD = 4.0V, WDT enabled, -40°C to +85°C VDD = 4.0V, WDT enabled, -40°C to +125°C (extended)
D021		16LF87XA	—	0.9	5	μA	VDD = 3.0V, WDT disabled, 0°C to +70°C
D021		16F87XA	—	1.5	16 20	μA μA	VDD = 4.0V, WDT disabled, -40°C to +85°C VDD = 4.0V, WDT disabled, -40°C to +125°C (extended)
D021A		16LF87XA		0.9	5	μA	VDD = 3.0V, WDT disabled, -40°C to +85°C
D021A		16F87XA		1.5	19	μA	VDD = 4.0V, WDT disabled, -40°C to +85°C
D023	ΔIBOR	**Brown-out Reset Current(6)**	—	85	200	μA	BOR enabled, VDD = 5.0V

Legend: Rows with standard voltage device data only are shaded for improved readability.

† Data in "Typ" column is at 5V, 25°C, unless otherwise stated. These parameters are for design guidance only and are not tested.

Note 1: This is the limit to which VDD can be lowered without losing RAM data.

2: The supply current is mainly a function of the operating voltage and frequency. Other factors, such as I/O pin loading, switching rate, oscillator type, internal code execution pattern and temperature, also have an impact on the current consumption.
The test conditions for all IDD measurements in active operation mode are:
OSC1 = external square wave, from rail-to-rail; all I/O pins tri-stated, pulled to VDD;
MCLR = VDD; WDT enabled/disabled as specified.

3: The power-down current in Sleep mode does not depend on the oscillator type. Power-down current is measured with the part in Sleep mode, with all I/O pins in high-impedance state and tied to VDD and VSS.

4: For RC osc configuration, current through REXT is not included. The current through the resistor can be estimated by the formula Ir = VDD/2REXT (mA) with REXT in kΩ.

5: Timer1 oscillator (when enabled) adds approximately 20 μA to the specification. This value is from characterization and is for design guidance only. This is not tested.

6: The Δ current is the additional current consumed when this peripheral is enabled. This current should be added to the base IDD or IPD measurement.

7: When BOR is enabled, the device will operate correctly until the VBOR voltage trip point is reached.

17.2 DC Characteristics: PIC16F873A/874A/876A/877A (Industrial, Extended) PIC16LF873A/874A/876A/877A (Industrial)

DC CHARACTERISTICS			Standard Operating Conditions (unless otherwise stated) Operating temperature -40°C ≤ TA ≤ +85°C for industrial -40°C ≤ TA ≤ +125°C for extended Operating voltage VDD range as described in DC specification (**Section 17.1**)				
Param No.	**Sym**	**Characteristic**	**Min**	**Typ†**	**Max**	**Units**	**Conditions**
	VIL	**Input Low Voltage**					
		I/O ports:					
D030		with TTL buffer	VSS	—	0.15 VDD	V	For entire VDD range
D030A			VSS	—	0.8V	V	4.5V ≤ VDD ≤ 5.5V
D031		with Schmitt Trigger buffer	VSS	—	0.2 VDD	V	
D032		$\overline{\text{MCLR}}$, OSC1 (in RC mode)	VSS	—	0.2 VDD	V	
D033		OSC1 (in XT and LP modes)	VSS	—	0.3V	V	**(Note 1)**
		OSC1 (in HS mode)	VSS	—	0.3 VDD	V	
		Ports RC3 and RC4:		—			
D034		with Schmitt Trigger buffer	VSS	—	0.3 VDD	V	For entire VDD range
D034A		with SMBus	-0.5	—	0.6	V	For VDD = 4.5 to 5.5V
	VIH	**Input High Voltage**					
		I/O ports:		—			
D040		with TTL buffer	2.0	—	VDD	V	4.5V ≤ VDD ≤ 5.5V
D040A			0.25 VDD + 0.8V	—	VDD	V	For entire VDD range
D041		with Schmitt Trigger buffer	0.8 VDD	—	VDD	V	For entire VDD range
D042		$\overline{\text{MCLR}}$	0.8 VDD	—	VDD	V	
D042A		OSC1 (in XT and LP modes)	1.6V	—	VDD	V	**(Note 1)**
		OSC1 (in HS mode)	0.7 VDD	—	VDD	V	
D043		OSC1 (in RC mode)	0.9 VDD	—	VDD	V	
		Ports RC3 and RC4:					
D044		with Schmitt Trigger buffer	0.7 VDD	—	VDD	V	For entire VDD range
D044A		with SMBus	1.4	—	5.5	V	For VDD = 4.5 to 5.5V
D070	IPURB	**PORTB Weak Pull-up Current**	50	250	400	μA	VDD = 5V, VPIN = VSS, -40°C TO +85°C
	IIL	**Input Leakage Current(2, 3)**					
D060		I/O ports	—	—	±1	μA	VSS ≤ VPIN ≤ VDD, pin at high-impedance
D061		$\overline{\text{MCLR}}$, RA4/T0CKI	—	—	±5	μA	VSS ≤ VPIN ≤ VDD
D063		OSC1	—	—	±5	μA	VSS ≤ VPIN ≤ VDD, XT, HS and LP osc configuration

* These parameters are characterized but not tested.

† Data in "Typ" column is at 5V, 25°C unless otherwise stated. These parameters are for design guidance only and are not tested.

Note 1: In RC oscillator configuration, the OSC1/CLKI pin is a Schmitt Trigger input. It is not recommended that the PIC16F87XA be driven with external clock in RC mode.

2: The leakage current on the $\overline{\text{MCLR}}$ pin is strongly dependent on the applied voltage level. The specified levels represent normal operating conditions. Higher leakage current may be measured at different input voltages.

3: Negative current is defined as current sourced by the pin.

© 2001-2013 Microchip Technology Inc.

17.2 DC Characteristics: PIC16F873A/874A/876A/877A (Industrial, Extended) PIC16LF873A/874A/876A/877A (Industrial) (Continued)

DC CHARACTERISTICS			Standard Operating Conditions (unless otherwise stated) Operating temperature -40°C ≤ TA ≤ +85°C for industrial -40°C ≤ TA ≤ +125°C for extended Operating voltage VDD range as described in DC specification (**Section 17.1**)				
Param No.	**Sym**	**Characteristic**	**Min**	**Typ†**	**Max**	**Units**	**Conditions**
	VOL	**Output Low Voltage**					
D080		I/O ports	—	—	0.6	V	IOL = 8.5 mA, VDD = 4.5V, -40°C to +85°C
D083		OSC2/CLKO (RC osc config)	—	—	0.6	V	IOL = 1.6 mA, VDD = 4.5V, -40°C to +85°C
	VOH	**Output High Voltage**					
D090		I/O ports(3)	VDD – 0.7	—	—	V	IOH = -3.0 mA, VDD = 4.5V, -40°C to +85°C
D092		OSC2/CLKO (RC osc config)	VDD – 0.7	—	—	V	IOH = -1.3 mA, VDD = 4.5V, -40°C to +85°C
D150*	VOD	**Open-Drain High Voltage**	—	—	8.5	V	RA4 pin
		Capacitive Loading Specs on Output Pins					
D100	COSC2	OSC2 pin	—	—	15	pF	In XT, HS and LP modes when external clock is used to drive OSC1
D101	CIO	All I/O pins and OSC2 (RC mode)	—	—	50	pF	
D102	CB	SCL, SDA (I^2C mode)	—	—	400	pF	
		Data EEPROM Memory					
D120	ED	Endurance	100K	1M	—	E/W	-40°C to +85°C
D121	VDRW	VDD for read/write	VMIN	—	5.5	V	Using EECON to read/write, VMIN = min. operating voltage
D122	TDEW	Erase/write cycle time	—	4	8	ms	
		Program Flash Memory					
D130	EP	Endurance	10K	100K	—	E/W	-40°C to +85°C
D131	VPR	VDD for read	VMIN	—	5.5	V	VMIN = min. operating voltage
D132A		VDD for erase/write	VMIN	—	5.5	V	Using EECON to read/write, VMIN = min. operating voltage
D133	TPEW	Erase/Write cycle time	—	4	8	ms	

* These parameters are characterized but not tested.

† Data in "Typ" column is at 5V, 25°C unless otherwise stated. These parameters are for design guidance only and are not tested.

Note 1: In RC oscillator configuration, the OSC1/CLKI pin is a Schmitt Trigger input. It is not recommended that the PIC16F87XA be driven with external clock in RC mode.

2: The leakage current on the $\overline{MCLR}$ pin is strongly dependent on the applied voltage level. The specified levels represent normal operating conditions. Higher leakage current may be measured at different input voltages.

3: Negative current is defined as current sourced by the pin.

TABLE 17-1: COMPARATOR SPECIFICATIONS

Operating Conditions:	3.0V < V_{DD} < 5.5V, -40°C < T_A < +85°C (unless otherwise stated) 4.0V < V_{DD} < 5.5V, -40°C < T_A < +125°C (unless otherwise stated)						
Param No.	**Sym**	**Characteristics**	**Min**	**Typ**	**Max**	**Units**	**Comments**
D300	V_{IOFF}	Input Offset Voltage	—	± 5.0	± 10	mV	
D301	V_{ICM}	Input Common Mode Voltage*	0	-	V_{DD} – 1.5	V	
D302	CMRR	Common Mode Rejection Ratio*	55	-	—	dB	
300 300A	T_{RESP}	Response Time*(1)	—	150	400 600	ns ns	PIC16F87XA PIC16LF87XA
301	T_{MC2OV}	Comparator Mode Change to Output Valid*	—	—	10	μs	

* These parameters are characterized but not tested.

Note 1: Response time measured with one comparator input at (V_{DD} – 1.5)/2 while the other input transitions from V_{SS} to V_{DD}.

TABLE 17-2: VOLTAGE REFERENCE SPECIFICATIONS

Operating Conditions:	3.0V < V_{DD} < 5.5V, -40°C < T_A < +85°C (unless otherwise stated) 4.0V < V_{DD} < 5.5V, -40°C < T_A < +125°C (unless otherwise stated)						
Spec No.	**Sym**	**Characteristics**	**Min**	**Typ**	**Max**	**Units**	**Comments**
D310	V_{RES}	Resolution	V_{DD}/24	—	V_{DD}/32	LSb	
D311	VR_{AA}	Absolute Accuracy	— —	— —	1/2 1/2	LSb LSb	Low Range (VRR = 1) High Range (VRR = 0)
D312	VR_{UR}	Unit Resistor Value (R)*	—	2k	—	Ω	
310	T_{SET}	Settling Time*(1)	—	—	10	μs	

* These parameters are characterized but not tested.

Note 1: Settling time measured while VRR = 1 and VR<3:0> transitions from '0000' to '1111'.

© 2001-2013 Microchip Technology Inc.

17.3 Timing Parameter Symbology

The timing parameter symbols have been created following one of the following formats:

1. TppS2ppS
2. TppS
3. TCC:ST (I²C specifications only)
4. Ts (I²C specifications only)

T			
F	Frequency	T	Time

Lowercase letters (pp) and their meanings:

pp			
cc	CCP1	osc	OSC1
ck	CLKO	rd	$\overline{RD}$
cs	$\overline{CS}$	rw	$\overline{RD}$ or $\overline{WR}$
di	SDI	sc	SCK
do	SDO	ss	$\overline{SS}$
dt	Data in	t0	T0CKI
io	I/O port	t1	T1CKI
mc	$\overline{MCLR}$	wr	$\overline{WR}$

Uppercase letters and their meanings:

S			
F	Fall	P	Period
H	High	R	Rise
I	Invalid (High-impedance)	V	Valid
L	Low	Z	High-impedance
I²C only			
AA	output access	High	High
BUF	Bus free	Low	Low

TCC:ST (I²C specifications only)

CC			
HD	Hold	SU	Setup
ST			
DAT	Data input hold	STO	Stop condition
STA	Start condition		

FIGURE 17-3: LOAD CONDITIONS

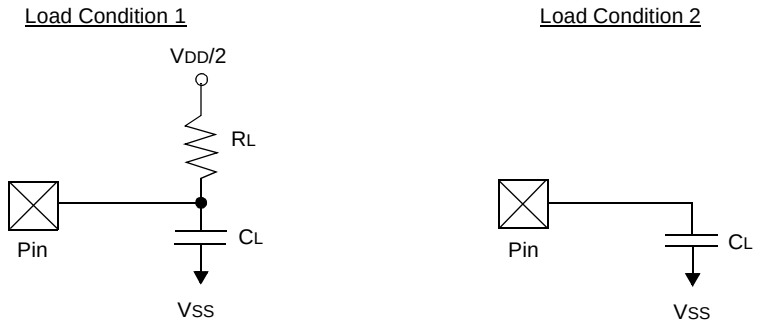

RL = 464Ω

CL = 50 pF for all pins except OSC2, but including PORTD and PORTE outputs as ports,
15 pF for OSC2 output

Note: PORTD and PORTE are not implemented on PIC16F873A/876A devices.

FIGURE 17-4: EXTERNAL CLOCK TIMING

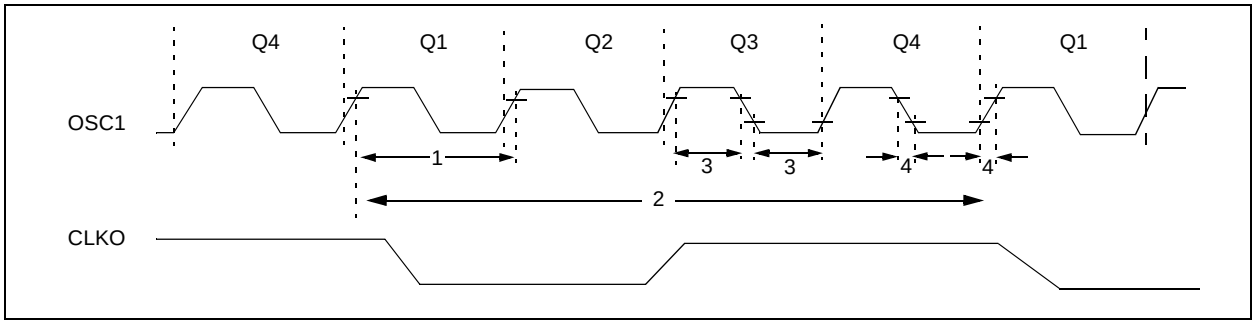

TABLE 17-3: EXTERNAL CLOCK TIMING REQUIREMENTS

Param No.	Symbol	Characteristic	Min	Typ†	Max	Units	Conditions
	FOSC	External CLKI Frequency **(Note 1)**	DC	—	1	MHz	XT and RC Osc mode
			DC	—	20	MHz	HS Osc mode
			DC	—	32	kHz	LP Osc mode
		Oscillator Frequency **(Note 1)**	DC	—	4	MHz	RC Osc mode
			0.1	—	4	MHz	XT Osc mode
			4	—	20	MHz	HS Osc mode
			5	—	200	kHz	LP Osc mode
1	TOSC	External CLKI Period **(Note 1)**	1000	—	—	ns	XT and RC Osc mode
			50	—	—	ns	HS Osc mode
			5	—	—	μs	LP Osc mode
		Oscillator Period **(Note 1)**	250	—	—	ns	RC Osc mode
			250	—	1	μs	XT Osc mode
			100	—	250	ns	HS Osc mode
			50	—	250	ns	HS Osc mode
			31.25	—	—	μs	LP Osc mode
2	TCY	Instruction Cycle Time **(Note 1)**	200	TCY	DC	ns	TCY = 4/FOSC
3	TOSL, TOSH	External Clock in (OSC1) High or Low Time	100	—	—	ns	XT oscillator
			2.5	—	—	μs	LP oscillator
			15	—	—	ns	HS oscillator
4	TOSR, TOSF	External Clock in (OSC1) Rise or Fall Time	—	—	25	ns	XT oscillator
			—	—	50	ns	LP oscillator
			—	—	15	ns	HS oscillator

† Data in “Typ” column is at 5V, 25°C unless otherwise stated. These parameters are for design guidance only and are not tested.

Note 1: Instruction cycle period (TCY) equals four times the input oscillator time base period. All specified values are based on characterization data for that particular oscillator type, under standard operating conditions, with the device executing code. Exceeding these specified limits may result in an unstable oscillator operation and/or higher than expected current consumption. All devices are tested to operate at “min.” values with an external clock applied to the OSC1/CLKI pin. When an external clock input is used, the “max.” cycle time limit is “DC” (no clock) for all devices.

© 2001-2013 Microchip Technology Inc.

FIGURE 17-5: CLKO AND I/O TIMING

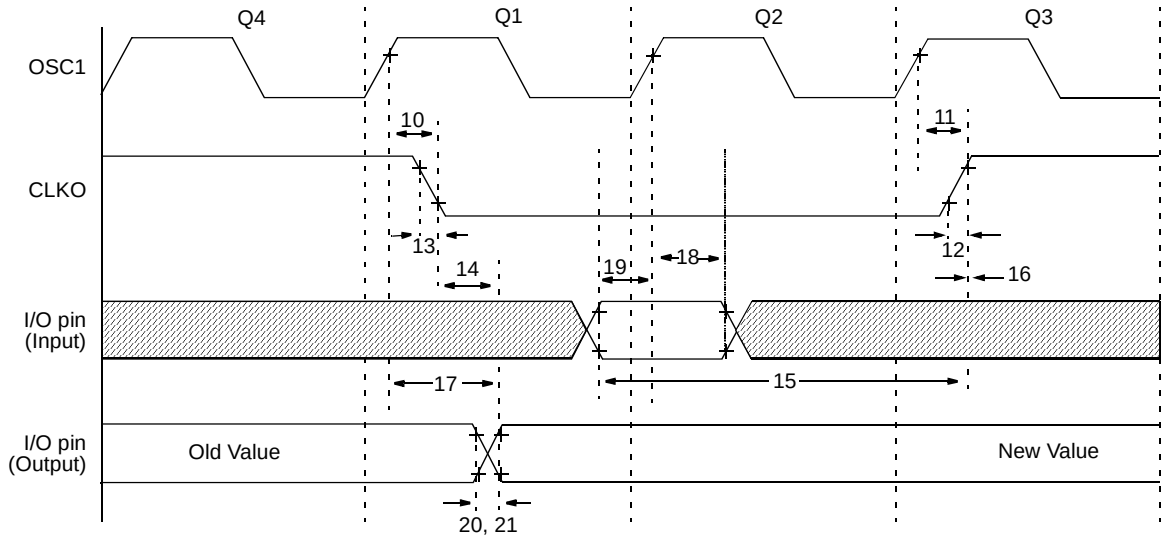

Note: Refer to Figure 17-3 for load conditions.

TABLE 17-4: CLKO AND I/O TIMING REQUIREMENTS

Param No.	Symbol	Characteristic		Min	Typ†	Max	Units	Conditions
10*	TOSH2CKL	OSC1 ↑ to CLKO ↓		—	75	200	ns	**(Note 1)**
11*	TOSH2CKH	OSC1 ↑ to CLKO ↑		—	75	200	ns	**(Note 1)**
12*	TCKR	CLKO Rise Time		—	35	100	ns	**(Note 1)**
13*	TCKF	CLKO Fall Time		—	35	100	ns	**(Note 1)**
14*	TCKL2IOV	CLKO ↓ to Port Out Valid		—	—	0.5 TCY + 20	ns	**(Note 1)**
15*	TIOV2CKH	Port In Valid before CLKO ↑		TOSC + 200	—	—	ns	**(Note 1)**
16*	TCKH2IOI	Port In Hold after CLKO ↑		0	—	—	ns	**(Note 1)**
17*	TOSH2IOV	OSC1 ↑ (Q1 cycle) to Port Out Valid		—	100	255	ns	
18*	TOSH2IOI	OSC1 ↑ (Q2 cycle) to Port Input Invalid (I/O in hold time)	Standard (**F**)	100	—	—	ns	
			Extended (**LF**)	200	—	—	ns	
19*	TIOV2OSH	Port Input Valid to OSC1 ↑ (I/O in setup time)		0	—	—	ns	
20*	TIOR	Port Output Rise Time	Standard (**F**)	—	10	40	ns	
			Extended (**LF**)	—	—	145	ns	
21*	TIOF	Port Output Fall Time	Standard (**F**)	—	10	40	ns	
			Extended (**LF**)	—	—	145	ns	
22††*	TINP	INT pin High or Low Time		TCY	—	—	ns	
23††*	TRBP	RB7:RB4 Change INT High or Low Time		TCY	—	—	ns	

* These parameters are characterized but not tested.

† Data in “Typ” column is at 5V, 25°C unless otherwise stated. These parameters are for design guidance only and are not tested.

†† These parameters are asynchronous events not related to any internal clock edges.

Note 1: Measurements are taken in RC mode where CLKO output is 4 x TOSC.

FIGURE 17-6: RESET, WATCHDOG TIMER, OSCILLATOR START-UP TIMER AND POWER-UP TIMER TIMING

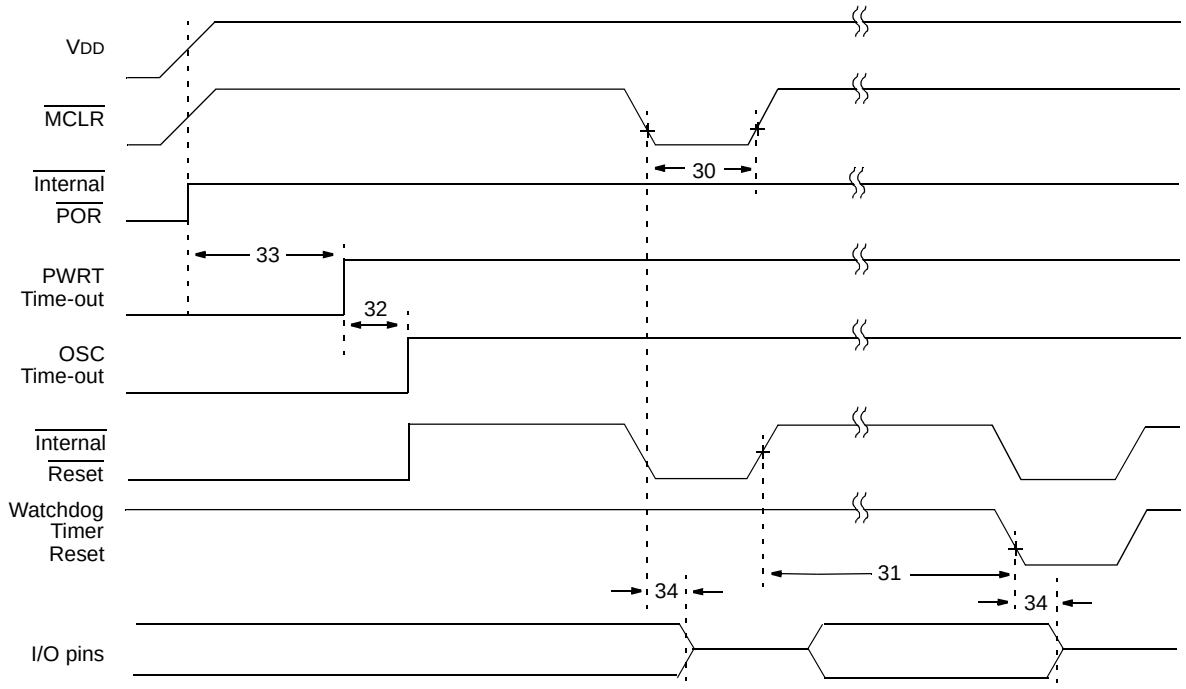

Note: Refer to Figure 17-3 for load conditions.

FIGURE 17-7: BROWN-OUT RESET TIMING

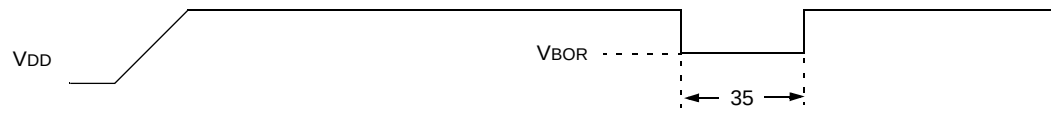

TABLE 17-5: RESET, WATCHDOG TIMER, OSCILLATOR START-UP TIMER, POWER-UP TIMER AND BROWN-OUT RESET REQUIREMENTS

Param No.	Symbol	Characteristic	Min	Typ†	Max	Units	Conditions
30	TMCL	$\overline{\text{MCLR}}$ Pulse Width (low)	2	—	—	μs	VDD = 5V, -40°C to +85°C
31*	TWDT	Watchdog Timer Time-out Period (no prescaler)	7	18	33	ms	VDD = 5V, -40°C to +85°C
32	TOST	Oscillation Start-up Timer Period	—	1024 TOSC	—	—	TOSC = OSC1 period
33*	TPWRT	Power-up Timer Period	28	72	132	ms	VDD = 5V, -40°C to +85°C
34	TIOZ	I/O High-Impedance from $\overline{\text{MCLR}}$ Low or Watchdog Timer Reset	—	—	2.1	μs	
35	TBOR	Brown-out Reset Pulse Width	100	—	—	μs	VDD ≤ VBOR (D005)

* These parameters are characterized but not tested.

† Data in “Typ” column is at 5V, 25°C unless otherwise stated. These parameters are for design guidance only and are not tested.

© 2001-2013 Microchip Technology Inc.

FIGURE 17-8: TIMER0 AND TIMER1 EXTERNAL CLOCK TIMINGS

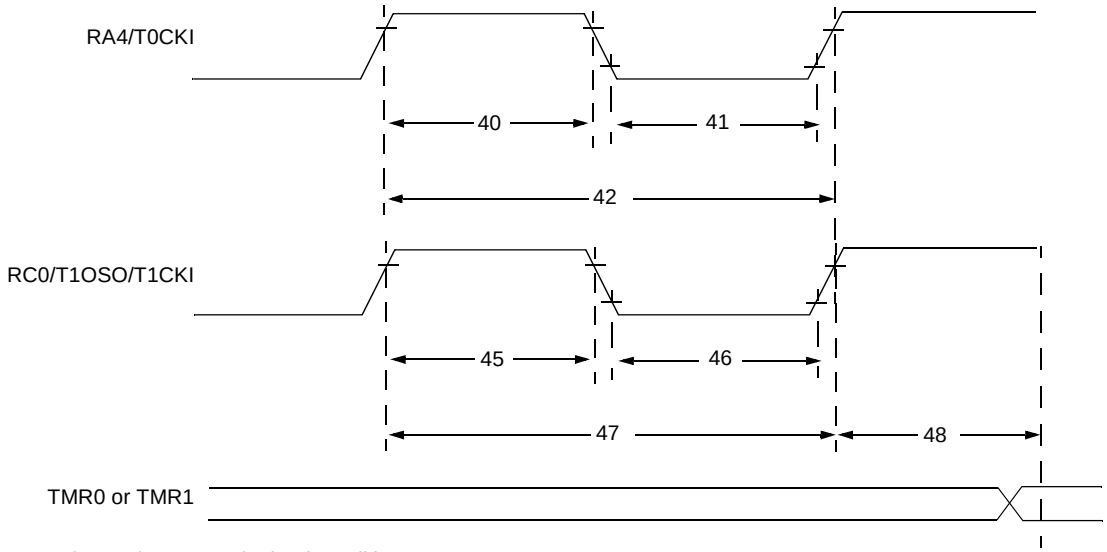

Note: Refer to Figure 17-3 for load conditions.

TABLE 17-6: TIMER0 AND TIMER1 EXTERNAL CLOCK REQUIREMENTS

Param No.	Symbol	Characteristic			Min	Typ†	Max	Units	Conditions
40*	TT0H	T0CKI High Pulse Width		No Prescaler	0.5 TCY + 20	—	—	ns	Must also meet parameter 42
				With Prescaler	10	—	—	ns	
41*	TT0L	T0CKI Low Pulse Width		No Prescaler	0.5 TCY + 20	—	—	ns	Must also meet parameter 42
				With Prescaler	10	—	—	ns	
42*	TT0P	T0CKI Period		No Prescaler	TCY + 40	—	—	ns	
				With Prescaler	Greater of: 20 or TCY + 40 / N	—	—	ns	N = prescale value (2, 4,..., 256)
45*	TT1H	T1CKI High Time	Synchronous, Prescaler = 1		0.5 TCY + 20	—	—	ns	Must also meet parameter 47
			Synchronous, Prescaler = 2, 4, 8	Standard(**F**)	15	—	—	ns	
				Extended(**LF**)	25	—	—	ns	
			Asynchronous	Standard(**F**)	30	—	—	ns	
				Extended(**LF**)	50	—	—	ns	
46*	TT1L	T1CKI Low Time	Synchronous, Prescaler = 1		0.5 TCY + 20	—	—	ns	Must also meet parameter 47
			Synchronous, Prescaler = 2, 4, 8	Standard(**F**)	15	—	—	ns	
				Extended(**LF**)	25	—	—	ns	
			Asynchronous	Standard(**F**)	30	—	—	ns	
				Extended(**LF**)	50	—	—	ns	
47*	TT1P	T1CKI Input Period	Synchronous	Standard(**F**)	Greater of: 30 or TCY + 40 / N	—	—	ns	N = prescale value (1, 2, 4, 8)
				Extended(**LF**)	Greater of: 50 or TCY + 40 / N				N = prescale value (1, 2, 4, 8)
			Asynchronous	Standard(**F**)	60	—	—	ns	
				Extended(**LF**)	100	—	—	ns	
	FT1	Timer1 Oscillator Input Frequency Range (oscillator enabled by setting bit T1OSCEN)			DC	—	200	kHz	
48	TCKEZTMR1	Delay from External Clock Edge to Timer Increment			2 TOSC	—	7 TOSC	—	

* These parameters are characterized but not tested.

† Data in “Typ” column is at 5V, 25°C unless otherwise stated. These parameters are for design guidance only and are not tested.

FIGURE 17-9: CAPTURE/COMPARE/PWM TIMINGS (CCP1 AND CCP2)

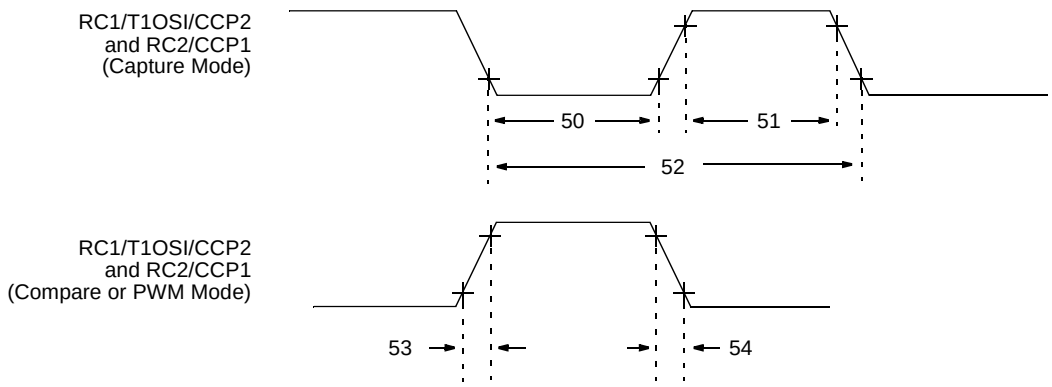

Note: Refer to Figure 17-3 for load conditions.

TABLE 17-7: CAPTURE/COMPARE/PWM REQUIREMENTS (CCP1 AND CCP2)

Param No.	Symbol	Characteristic			Min	Typ†	Max	Units	Conditions
50*	TccL	CCP1 and CCP2 Input Low Time	No Prescaler		0.5 TCY + 20	—	—	ns	
			With Prescaler	Standard(**F**)	10	—	—	ns	
				Extended(**LF**)	20	—	—	ns	
51*	TccH	CCP1 and CCP2 Input High Time	No Prescaler		0.5 TCY + 20	—	—	ns	
			With Prescaler	Standard(**F**)	10	—	—	ns	
				Extended(**LF**)	20	—	—	ns	
52*	TccP	CCP1 and CCP2 Input Period			$\frac{3\ T_{CY} + 40}{N}$	—	—	ns	N = prescale value (1, 4 or 16)
53*	TccR	CCP1 and CCP2 Output Rise Time		Standard(**F**)	—	10	25	ns	
				Extended(**LF**)	—	25	50	ns	
54*	TccF	CCP1 and CCP2 Output Fall Time		Standard(**F**)	—	10	25	ns	
				Extended(**LF**)	—	25	45	ns	

* These parameters are characterized but not tested.

† Data in “Typ” column is at 5V, 25°C unless otherwise stated. These parameters are for design guidance only and are not tested.

© 2001-2013 Microchip Technology Inc.

FIGURE 17-10: PARALLEL SLAVE PORT TIMING (PIC16F874A/877A ONLY)

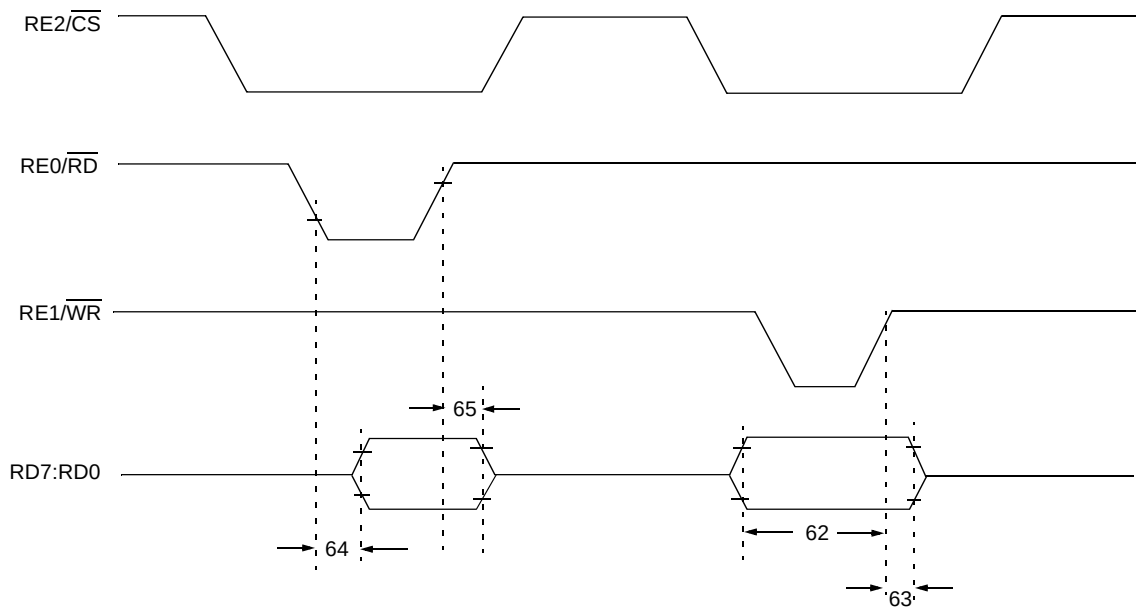

Note: Refer to Figure 17-3 for load conditions.

TABLE 17-8: PARALLEL SLAVE PORT REQUIREMENTS (PIC16F874A/877A ONLY)

Param No.	Symbol	Characteristic		Min	Typ†	Max	Units	Conditions
62	TDTV2WRH	Data In Valid before $\overline{WR}$ ↑ or $\overline{CS}$ ↑ (setup time)		20	—	—	ns	
63*	TWRH2DTI	$\overline{WR}$ ↑ or $\overline{CS}$ ↑ to Data–in Invalid (hold time)	Standard(**F**)	20	—	—	ns	
			Extended(**LF**)	35	—	—	ns	
64	TRDL2DTV	$\overline{RD}$ ↓ and $\overline{CS}$ ↓ to Data–out Valid		—	—	80	ns	
65	TRDH2DTI	$\overline{RD}$ ↑ or $\overline{CS}$ ↓ to Data–out Invalid		10	—	30	ns	

* These parameters are characterized but not tested.

† Data in “Typ” column is at 5V, 25°C unless otherwise stated. These parameters are for design guidance only and are not tested.

FIGURE 17-11: SPI MASTER MODE TIMING (CKE = 0, SMP = 0)

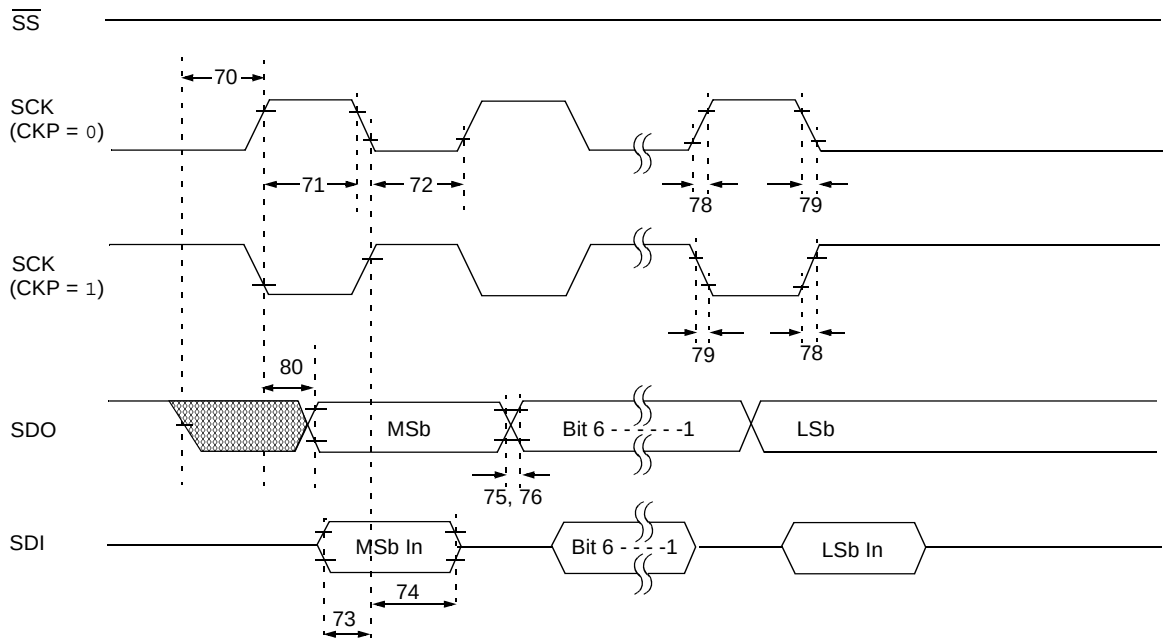

Note: Refer to Figure 17-3 for load conditions.

FIGURE 17-12: SPI MASTER MODE TIMING (CKE = 1, SMP = 1)

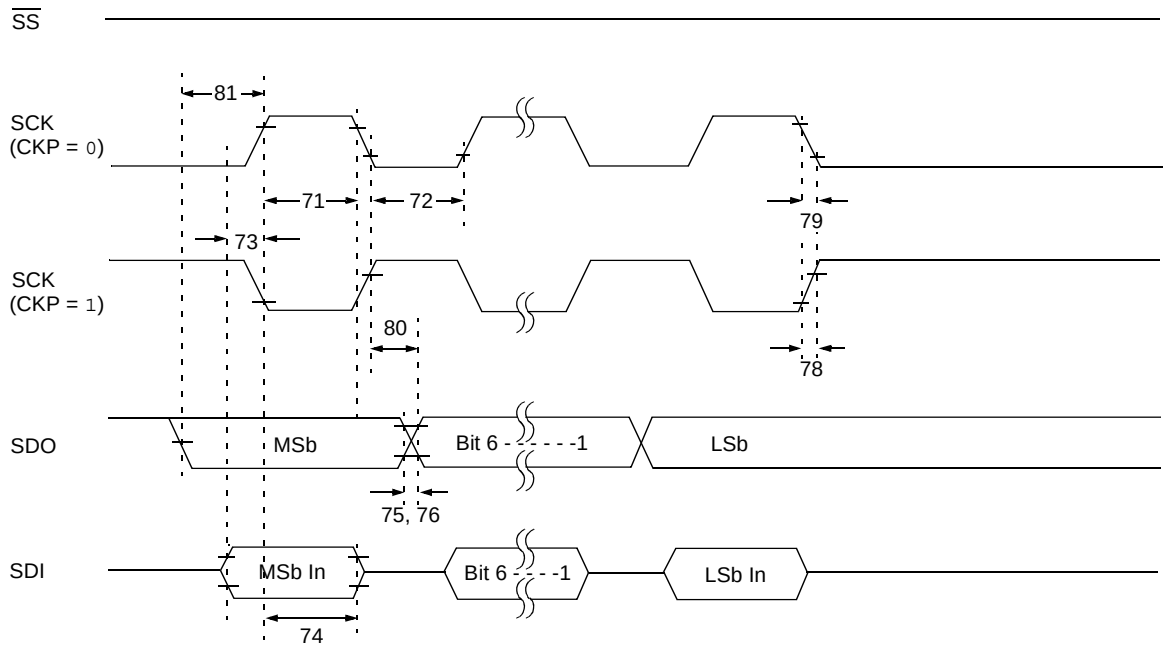

Note: Refer to Figure 17-3 for load conditions.

© 2001-2013 Microchip Technology Inc.

FIGURE 17-13: SPI SLAVE MODE TIMING (CKE = 0)

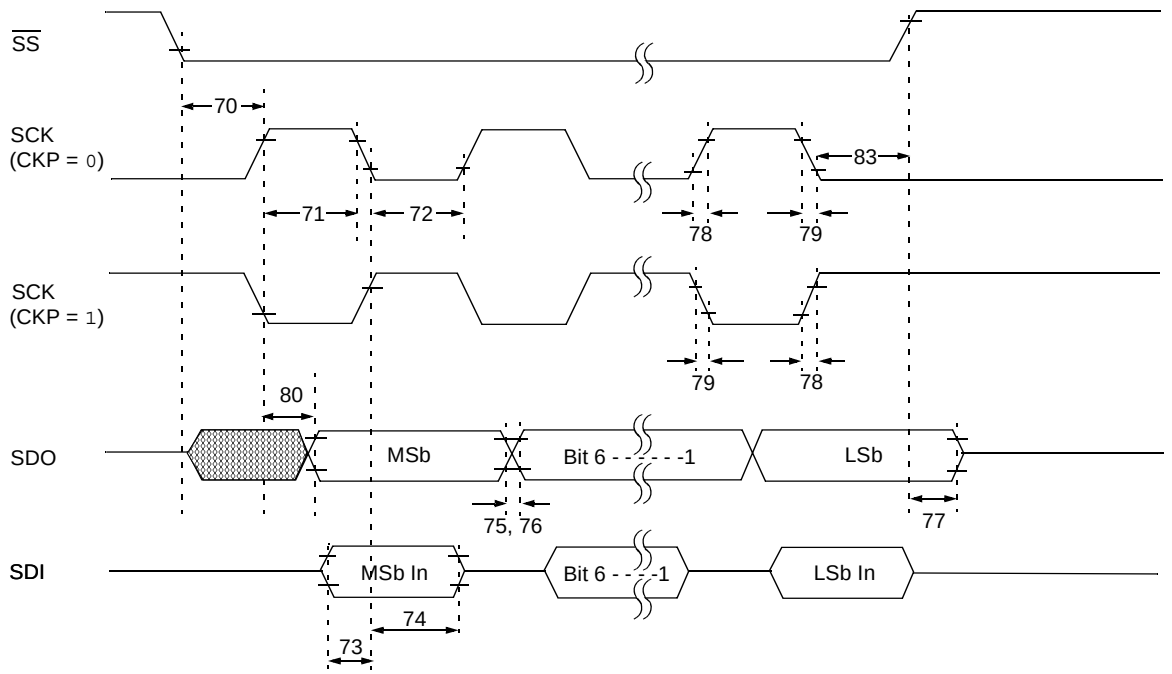

Note: Refer to Figure 17-3 for load conditions.

FIGURE 17-14: SPI SLAVE MODE TIMING (CKE = 1)

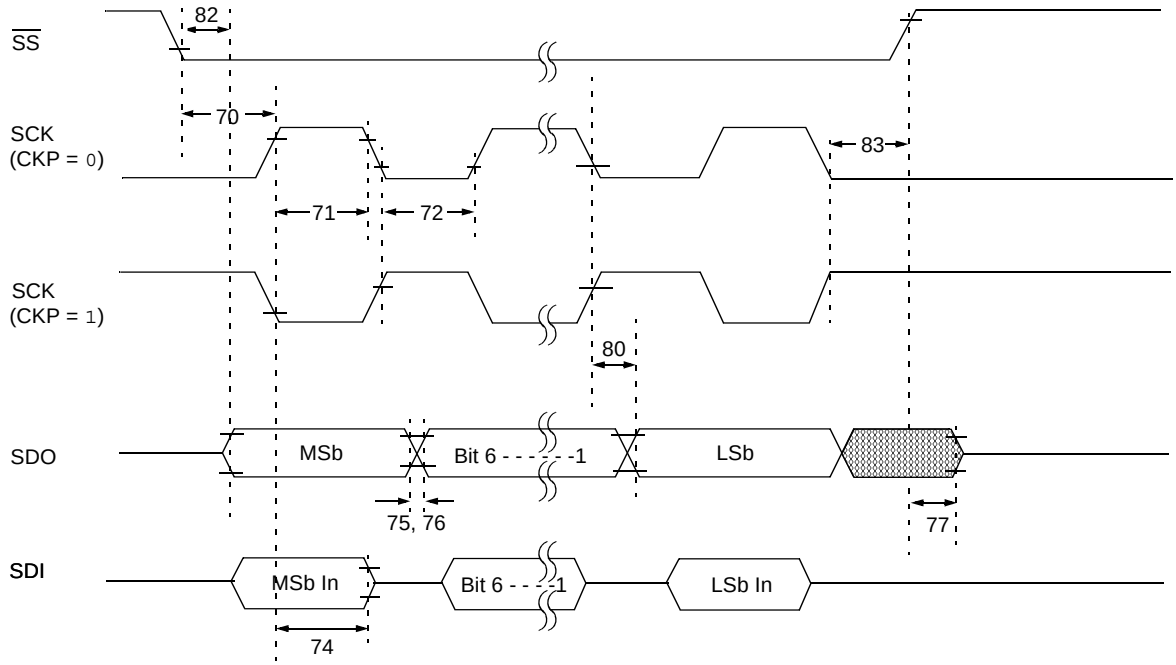

Note: Refer to Figure 17-3 for load conditions.

TABLE 17-9: SPI MODE REQUIREMENTS

Param No.	Symbol	Characteristic		Min	Typ†	Max	Units	Conditions
70*	TSSL2SCH, TSSL2SCL	$\overline{SS}$ ↓ to SCK ↓ or SCK ↑ Input		TCY	—	—	ns	
71*	TSCH	SCK Input High Time (Slave mode)		TCY + 20	—	—	ns	
72*	TSCL	SCK Input Low Time (Slave mode)		TCY + 20	—	—	ns	
73*	TDIV2SCH, TDIV2SCL	Setup Time of SDI Data Input to SCK Edge		100	—	—	ns	
74*	TSCH2DIL, TSCL2DIL	Hold Time of SDI Data Input to SCK Edge		100	—	—	ns	
75*	TDOR	SDO Data Output Rise Time	Standard(**F**) Extended(**LF**)	— —	10 25	25 50	ns ns	
76*	TDOF	SDO Data Output Fall Time		—	10	25	ns	
77*	TSSH2DOZ	$\overline{SS}$ ↑ to SDO Output High-Impedance		10	—	50	ns	
78*	TSCR	SCK Output Rise Time (Master mode)	Standard(**F**) Extended(**LF**)	— —	10 25	25 50	ns ns	
79*	TSCF	SCK Output Fall Time (Master mode)		—	10	25	ns	
80*	TSCH2DOV, TSCL2DOV	SDO Data Output Valid after SCK Edge	Standard(**F**) Extended(**LF**)	— —	— —	50 145	ns	
81*	TDOV2SCH, TDOV2SCL	SDO Data Output Setup to SCK Edge		TCY	—	—	ns	
82*	TSSL2DOV	SDO Data Output Valid after $\overline{SS}$ ↓ Edge		—	—	50	ns	
83*	TSCH2SSH, TSCL2SSH	$\overline{SS}$ ↑ after SCK Edge		1.5 TCY + 40	—	—	ns	

* These parameters are characterized but not tested.

† Data in “Typ” column is at 5V, 25°C unless otherwise stated. These parameters are for design guidance only and are not tested.

FIGURE 17-15: I²C BUS START/STOP BITS TIMING

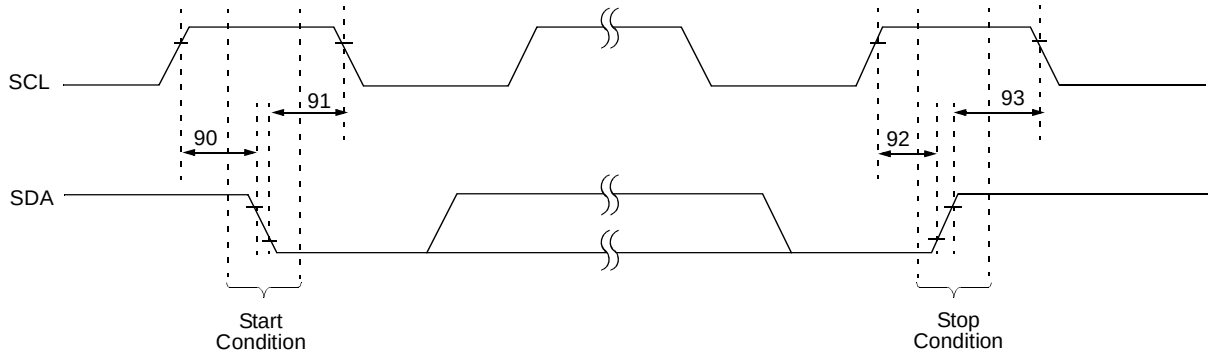

Note: Refer to Figure 17-3 for load conditions.

© 2001-2013 Microchip Technology Inc.

TABLE 17-10: I²C BUS START/STOP BITS REQUIREMENTS

Param No.	Symbol	Characteristic		Min	Typ	Max	Units	Conditions
90	TSU:STA	Start condition Setup time	100 kHz mode	4700	—	—	ns	Only relevant for Repeated Start condition
			400 kHz mode	600	—	—		
91	THD:STA	Start condition Hold time	100 kHz mode	4000	—	—	ns	After this period, the first clock pulse is generated
			400 kHz mode	600	—	—		
92	TSU:STO	Stop condition Setup time	100 kHz mode	4700	—	—	ns	
			400 kHz mode	600	—	—		
93	THD:STO	Stop condition Hold time	100 kHz mode	4000	—	—	ns	
			400 kHz mode	600	—	—		

FIGURE 17-16: I²C BUS DATA TIMING

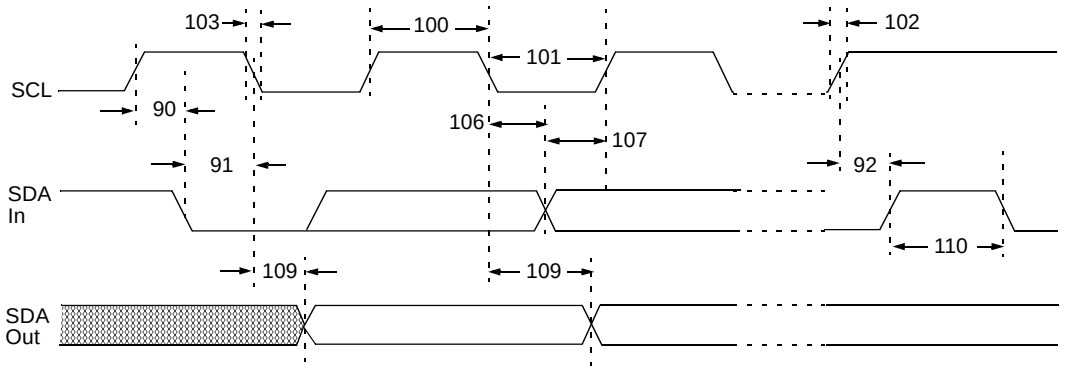

Note: Refer to Figure 17-3 for load conditions.

TABLE 17-11: I²C BUS DATA REQUIREMENTS

Param No.	Sym	Characteristic		Min	Max	Units	Conditions
100	THIGH	Clock High Time	100 kHz mode	4.0	—	μs	
			400 kHz mode	0.6	—	μs	
			SSP Module	0.5 TCY	—		
101	TLOW	Clock Low Time	100 kHz mode	4.7	—	μs	
			400 kHz mode	1.3	—	μs	
			SSP Module	0.5 TCY	—		
102	TR	SDA and SCL Rise Time	100 kHz mode	—	1000	ns	
			400 kHz mode	20 + 0.1 CB	300	ns	Cb is specified to be from 10 to 400 pF
103	TF	SDA and SCL Fall Time	100 kHz mode	—	300	ns	
			400 kHz mode	20 + 0.1 CB	300	ns	CB is specified to be from 10 to 400 pF
90	TSU:STA	Start Condition Setup Time	100 kHz mode	4.7	—	μs	Only relevant for Repeated Start condition
			400 kHz mode	0.6	—	μs	
91	THD:STA	Start Condition Hold Time	100 kHz mode	4.0	—	μs	After this period, the first clock pulse is generated
			400 kHz mode	0.6	—	μs	
106	THD:DAT	Data Input Hold Time	100 kHz mode	0	—	ns	
			400 kHz mode	0	0.9	μs	
107	TSU:DAT	Data Input Setup Time	100 kHz mode	250	—	ns	**(Note 2)**
			400 kHz mode	100	—	ns	
92	TSU:STO	Stop Condition Setup Time	100 kHz mode	4.7	—	μs	
			400 kHz mode	0.6	—	μs	
109	TAA	Output Valid from Clock	100 kHz mode	—	3500	ns	**(Note 1)**
			400 kHz mode	—	—	ns	
110	TBUF	Bus Free Time	100 kHz mode	4.7	—	μs	Time the bus must be free before a new transmission can start
			400 kHz mode	1.3	—	μs	
	CB	Bus Capacitive Loading		—	400	pF	

Note 1: As a transmitter, the device must provide this internal minimum delay time to bridge the undefined region (min. 300 ns) of the falling edge of SCL to avoid unintended generation of Start or Stop conditions.

2: A fast mode (400 kHz) I²C bus device can be used in a standard mode (100 kHz) I²C bus system, but the requirement that, TSU:DAT ≥ 250 ns, must then be met. This will automatically be the case if the device does not stretch the LOW period of the SCL signal. If such a device does stretch the LOW period of the SCL signal, it must output the next data bit to the SDA line, TR MAX. + TSU:DAT = 1000 + 250 = 1250 ns (according to the standard mode I²C bus specification), before the SCL line is released.

© 2001-2013 Microchip Technology Inc.

FIGURE 17-17: USART SYNCHRONOUS TRANSMISSION (MASTER/SLAVE) TIMING

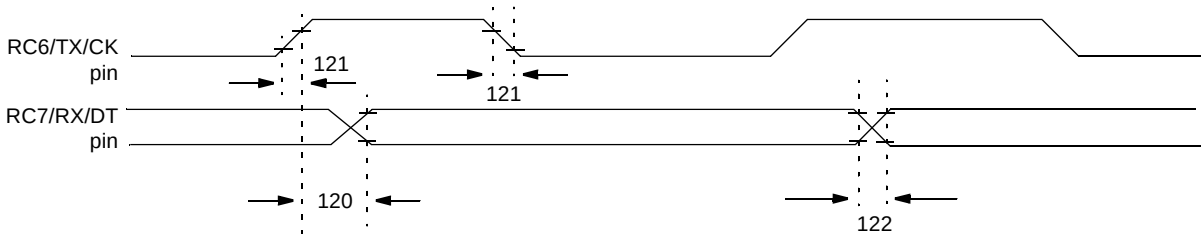

Note: Refer to Figure 17-3 for load conditions.

TABLE 17-12: USART SYNCHRONOUS TRANSMISSION REQUIREMENTS

Param No.	Symbol	Characteristic		Min	Typ†	Max	Units	Conditions
120	TCKH2DTV	SYNC XMIT (MASTER & SLAVE) Clock High to Data Out Valid	Standard(**F**)	—	—	80	ns	
			Extended(**LF**)	—	—	100	ns	
121	TCKRF	Clock Out Rise Time and Fall Time (Master mode)	Standard(**F**)	—	—	45	ns	
			Extended(**LF**)	—	—	50	ns	
122	TDTRF	Data Out Rise Time and Fall Time	Standard(**F**)	—	—	45	ns	
			Extended(**LF**)	—	—	50	ns	

† Data in “Typ” column is at 5V, 25°C unless otherwise stated. These parameters are for design guidance only and are not tested.

FIGURE 17-18: USART SYNCHRONOUS RECEIVE (MASTER/SLAVE) TIMING

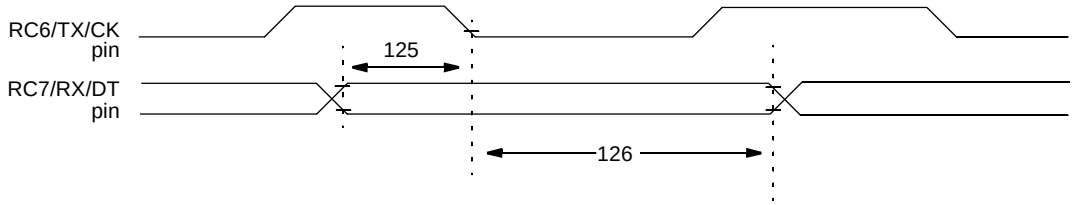

Note: Refer to Figure 17-3 for load conditions.

TABLE 17-13: USART SYNCHRONOUS RECEIVE REQUIREMENTS

Param No.	Symbol	Characteristic	Min	Typ†	Max	Units	Conditions
125	TDTV2CKL	SYNC RCV (MASTER & SLAVE) Data Setup before CK ↓ (DT setup time)	15	—	—	ns	
126	TCKL2DTL	Data Hold after CK ↓ (DT hold time)	15	—	—	ns	

† Data in “Typ” column is at 5V, 25°C unless otherwise stated. These parameters are for design guidance only and are not tested.

TABLE 17-14: A/D CONVERTER CHARACTERISTICS:PIC16F873A/874A/876A/877A (INDUSTRIAL)
PIC16LF873A/874A/876A/877A (INDUSTRIAL)

Param No.	Sym	Characteristic		Min	Typ†	Max	Units	Conditions
A01	N_R	Resolution		—	—	10-bits	bit	$V_{REF} = V_{DD} = 5.12V$, $V_{SS} \le V_{AIN} \le V_{REF}$
A03	E_{IL}	Integral Linearity Error		—	—	< ± 1	LSb	$V_{REF} = V_{DD} = 5.12V$, $V_{SS} \le V_{AIN} \le V_{REF}$
A04	E_{DL}	Differential Linearity Error		—	—	< ± 1	LSb	$V_{REF} = V_{DD} = 5.12V$, $V_{SS} \le V_{AIN} \le V_{REF}$
A06	E_{OFF}	Offset Error		—	—	< ± 2	LSb	$V_{REF} = V_{DD} = 5.12V$, $V_{SS} \le V_{AIN} \le V_{REF}$
A07	E_{GN}	Gain Error		—	—	< ± 1	LSb	$V_{REF} = V_{DD} = 5.12V$, $V_{SS} \le V_{AIN} \le V_{REF}$
A10	—	Monotonicity		—	guaranteed(3)	—	—	$V_{SS} \le V_{AIN} \le V_{REF}$
A20	V_{REF}	Reference Voltage ($V_{REF+} – V_{REF-}$)		2.0	—	V_{DD} + 0.3	V	
A21	V_{REF+}	Reference Voltage High		AV_{DD} – 2.5V		AV_{DD} + 0.3V	V	
A22	V_{REF-}	Reference Voltage Low		AV_{SS} – 0.3V		V_{REF+} – 2.0V	V	
A25	V_{AIN}	Analog Input Voltage		V_{SS} – 0.3V	—	V_{REF} + 0.3V	V	
A30	Z_{AIN}	Recommended Impedance of Analog Voltage Source		—	—	2.5	kΩ	**(Note 4)**
A40	I_{AD}	A/D Conversion Current (V_{DD})	PIC16F87XA	—	220	—	μA	Average current consumption when A/D is on **(Note 1)**
			PIC16LF87XA	—	90	—	μA	
A50	I_{REF}	V_{REF} Input Current **(Note 2)**		—	—	5	μA	During V_{AIN} acquisition. Based on differential of V_{HOLD} to V_{AIN} to charge C_{HOLD}, see **Section 11.1 "A/D Acquisition Requirements"**.
				—	—	150	μA	During A/D conversion cycle

* These parameters are characterized but not tested.

† Data in "Typ" column is at 5V, 25°C unless otherwise stated. These parameters are for design guidance only and are not tested.

Note 1: When A/D is off, it will not consume any current other than minor leakage current. The power-down current spec includes any such leakage from the A/D module.

2: V_{REF} current is from RA3 pin or V_{DD} pin, whichever is selected as reference input.

3: The A/D conversion result never decreases with an increase in the input voltage and has no missing codes.

4: Maximum allowed impedance for analog voltage source is 10 kΩ. This requires higher acquisition time.

© 2001-2013 Microchip Technology Inc.

FIGURE 17-19: A/D CONVERSION TIMING

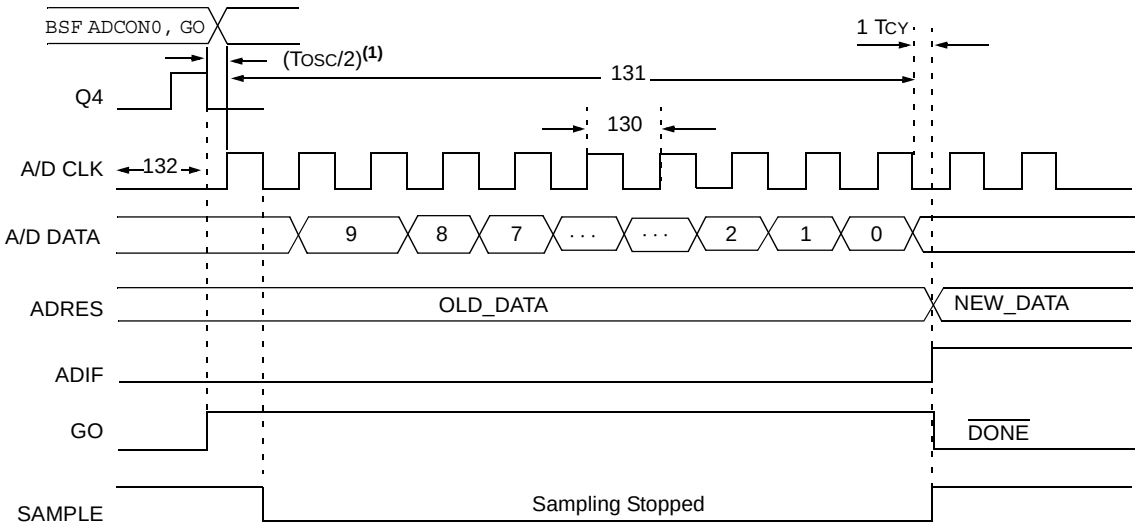

Note: If the A/D clock source is selected as RC, a time of TCY is added before the A/D clock starts. This allows the SLEEP instruction to be executed.

TABLE 17-15: A/D CONVERSION REQUIREMENTS

Param No.	Symbol	Characteristic		Min	Typ†	Max	Units	Conditions
130	TAD	A/D Clock Period	PIC16F87XA	1.6	—	—	μs	TOSC based, VREF ≥ 3.0V
			PIC16LF87XA	3.0	—	—	μs	TOSC based, VREF ≥ 2.0V
			PIC16F87XA	2.0	4.0	6.0	μs	A/D RC mode
			PIC16LF87XA	3.0	6.0	9.0	μs	A/D RC mode
131	TCNV	Conversion Time (not including S/H time) **(Note 1)**			—	12	TAD	
132	TACQ	Acquisition Time		**(Note 2)**	40	—	μs	
				10*	—	—	μs	The minimum time is the amplifier settling time. This may be used if the "new" input voltage has not changed by more than 1 LSb (i.e., 20.0 mV @ 5.12V) from the last sampled voltage (as stated on CHOLD).
134	TGO	Q4 to A/D Clock Start		—	TOSC/2 §	—	—	If the A/D clock source is selected as RC, a time of TCY is added before the A/D clock starts. This allows the SLEEP instruction to be executed.

* These parameters are characterized but not tested.

† Data in "Typ" column is at 5V, 25°C unless otherwise stated. These parameters are for design guidance only and are not tested.

§ This specification ensured by design.

Note 1: ADRES register may be read on the following TCY cycle.

2: See **Section 11.1 "A/D Acquisition Requirements"** for minimum conditions.

NOTES:

© 2001-2013 Microchip Technology Inc.

18.0 DC AND AC CHARACTERISTICS GRAPHS AND TABLES

Note:	The graphs and tables provided following this note are a statistical summary based on a limited number of samples and are provided for informational purposes only. The performance characteristics listed herein are not tested or guaranteed. In some graphs or tables, the data presented may be outside the specified operating range (e.g., outside specified power supply range) and therefore, outside the warranted range.

"Typical" represents the mean of the distribution at 25°C. "Maximum" or "minimum" represents (mean + 3σ) or (mean – 3σ) respectively, where σ is a standard deviation, over the whole temperature range.

FIGURE 18-1: TYPICAL IDD vs. FOSC OVER VDD (HS MODE)

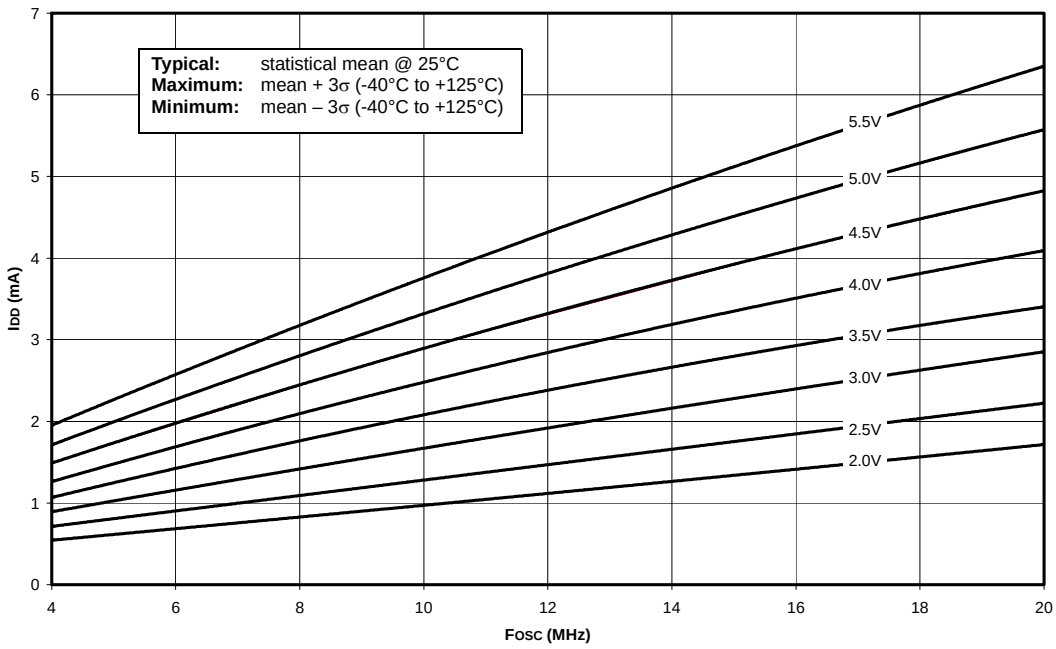

FIGURE 18-2: MAXIMUM IDD vs. FOSC OVER VDD (HS MODE)

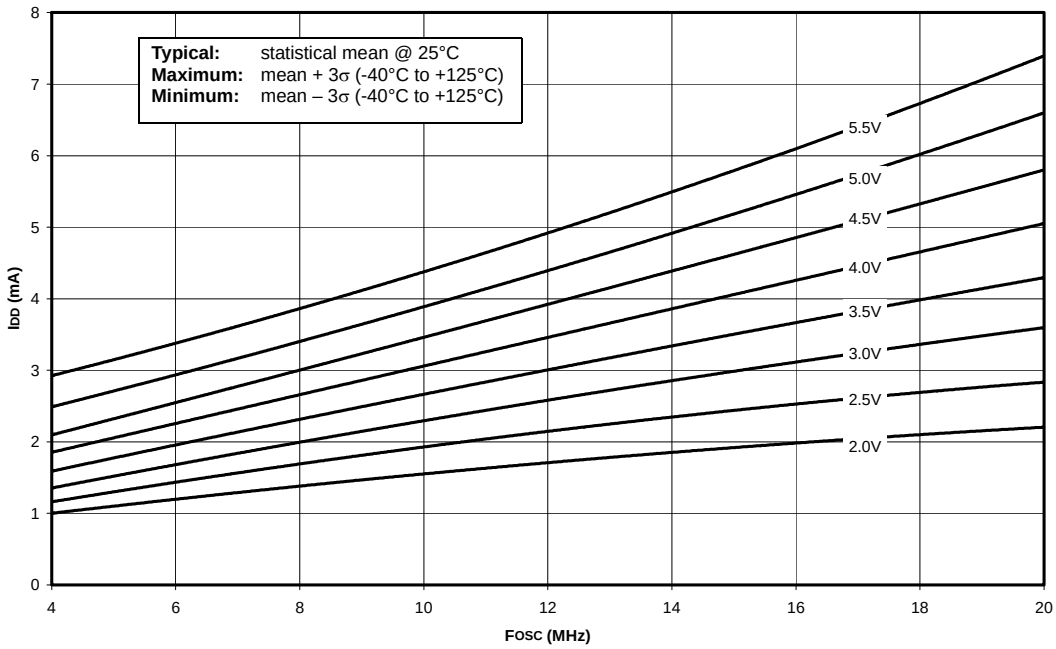

FIGURE 18-3: TYPICAL IDD vs. FOSC OVER VDD (XT MODE)

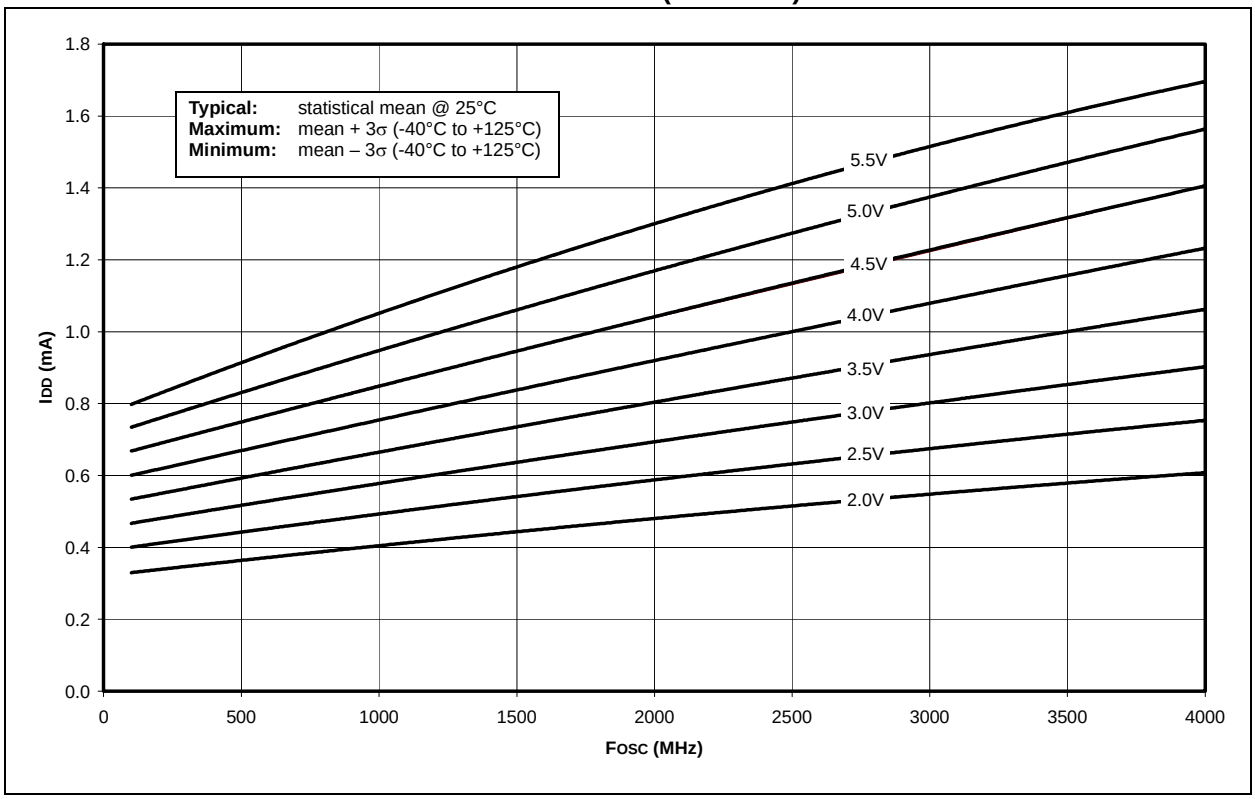

FIGURE 18-4: MAXIMUM IDD vs. FOSC OVER VDD (XT MODE)

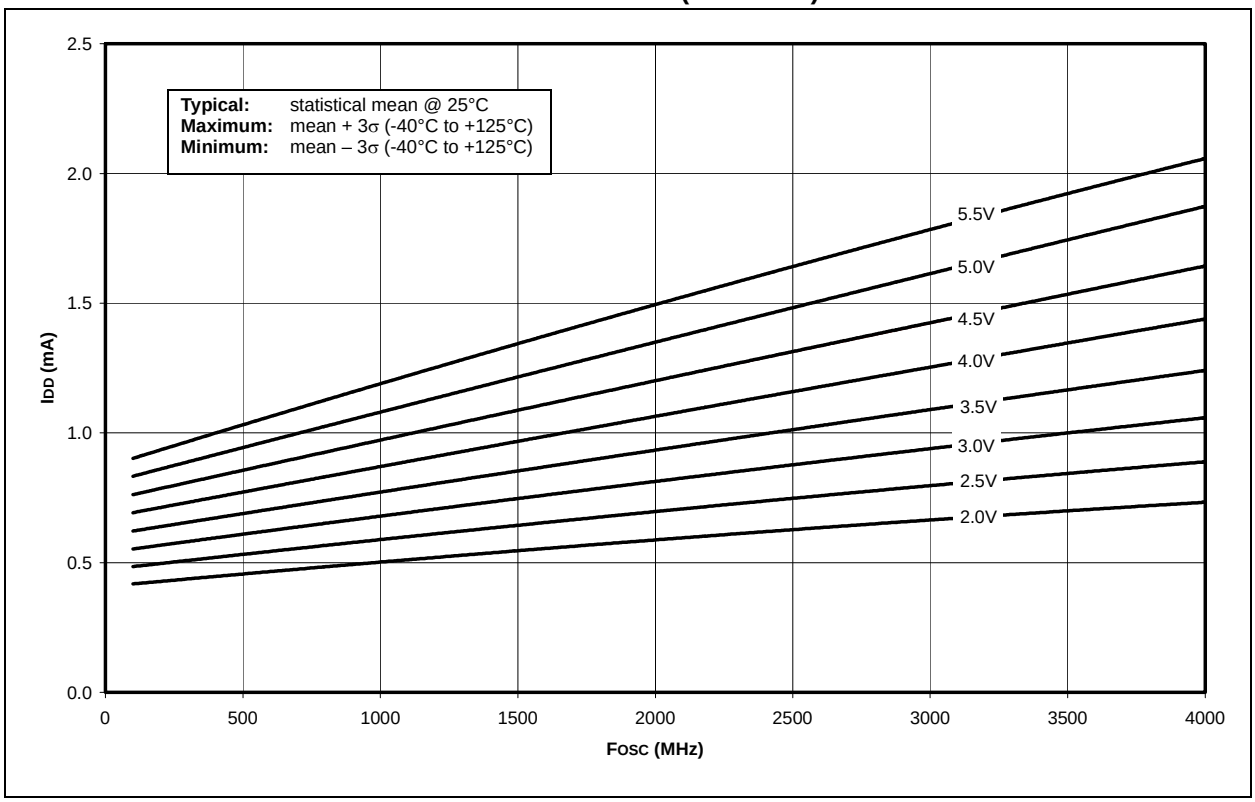

© 2001-2013 Microchip Technology Inc.

FIGURE 18-5: TYPICAL IDD vs. FOSC OVER VDD (LP MODE)

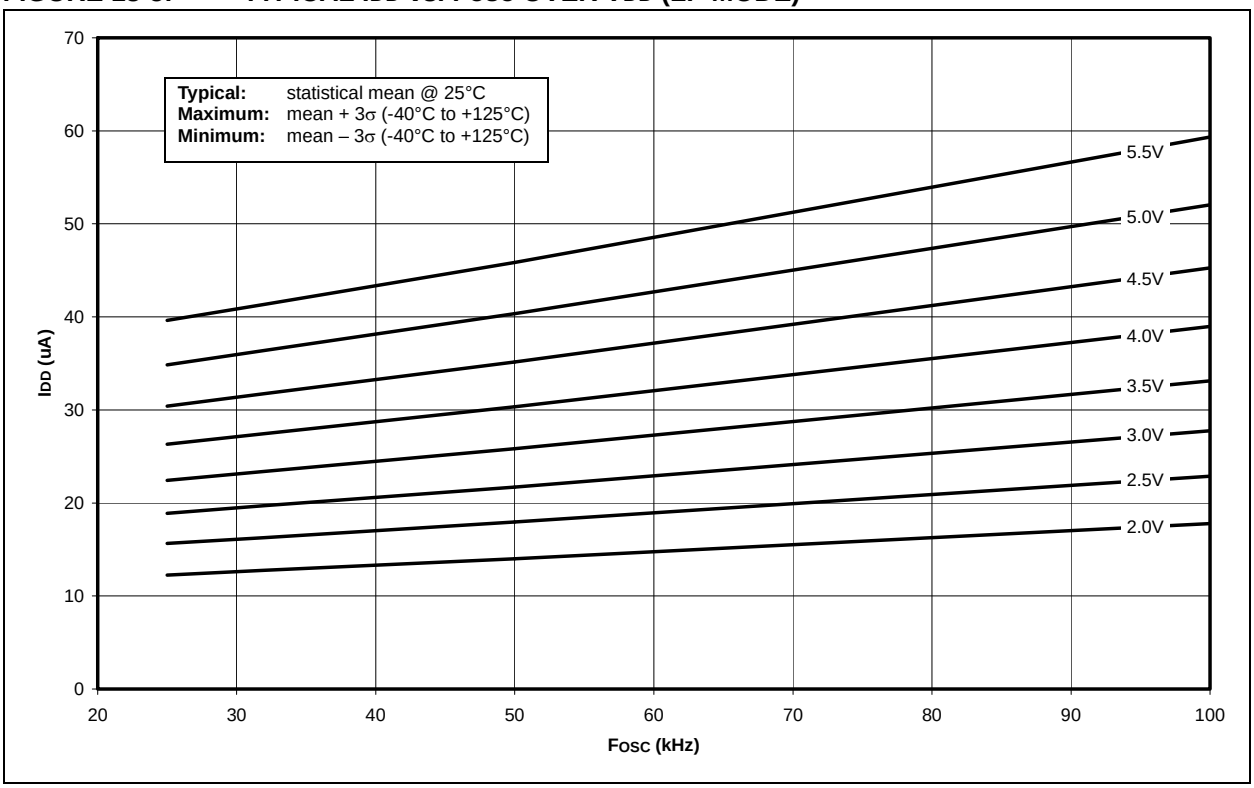

FIGURE 18-6: MAXIMUM IDD vs. FOSC OVER VDD (LP MODE)

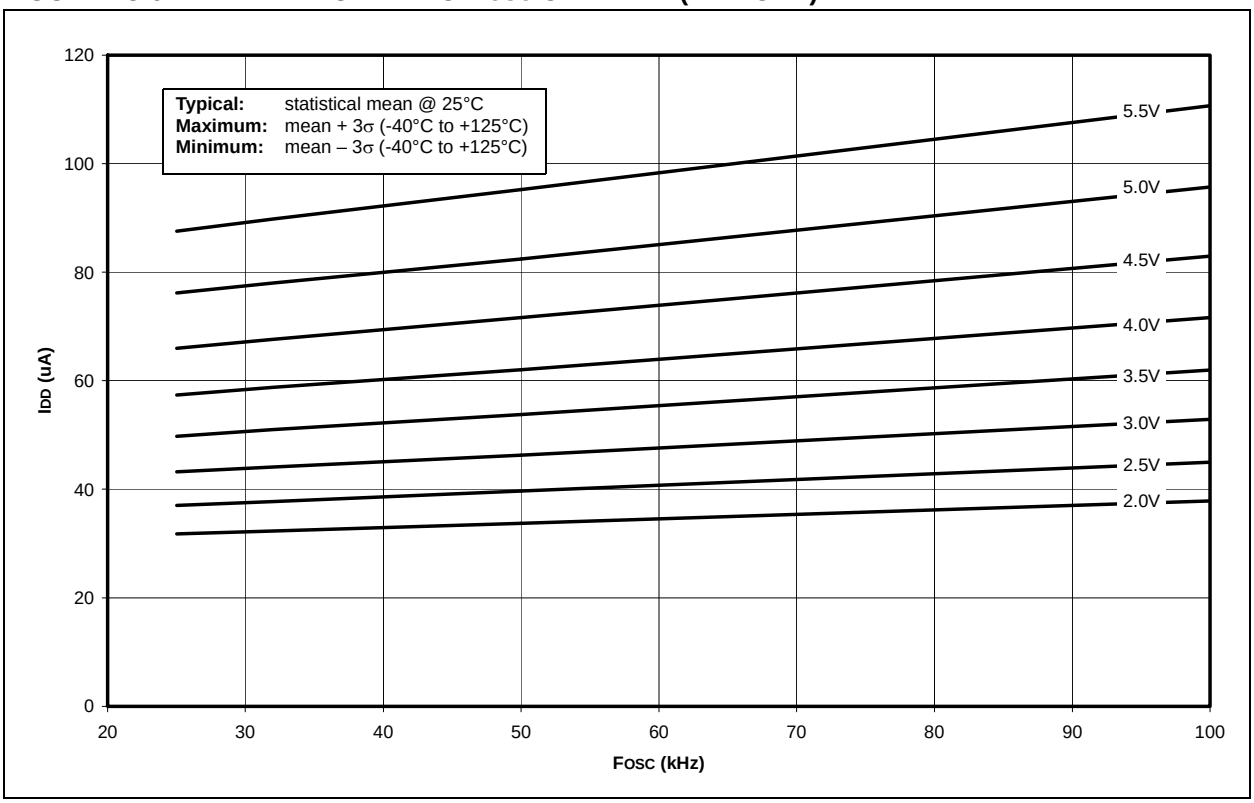

FIGURE 18-7: AVERAGE FOSC vs. VDD FOR VARIOUS VALUES OF R (RC MODE, C = 20 pF, +25°C)

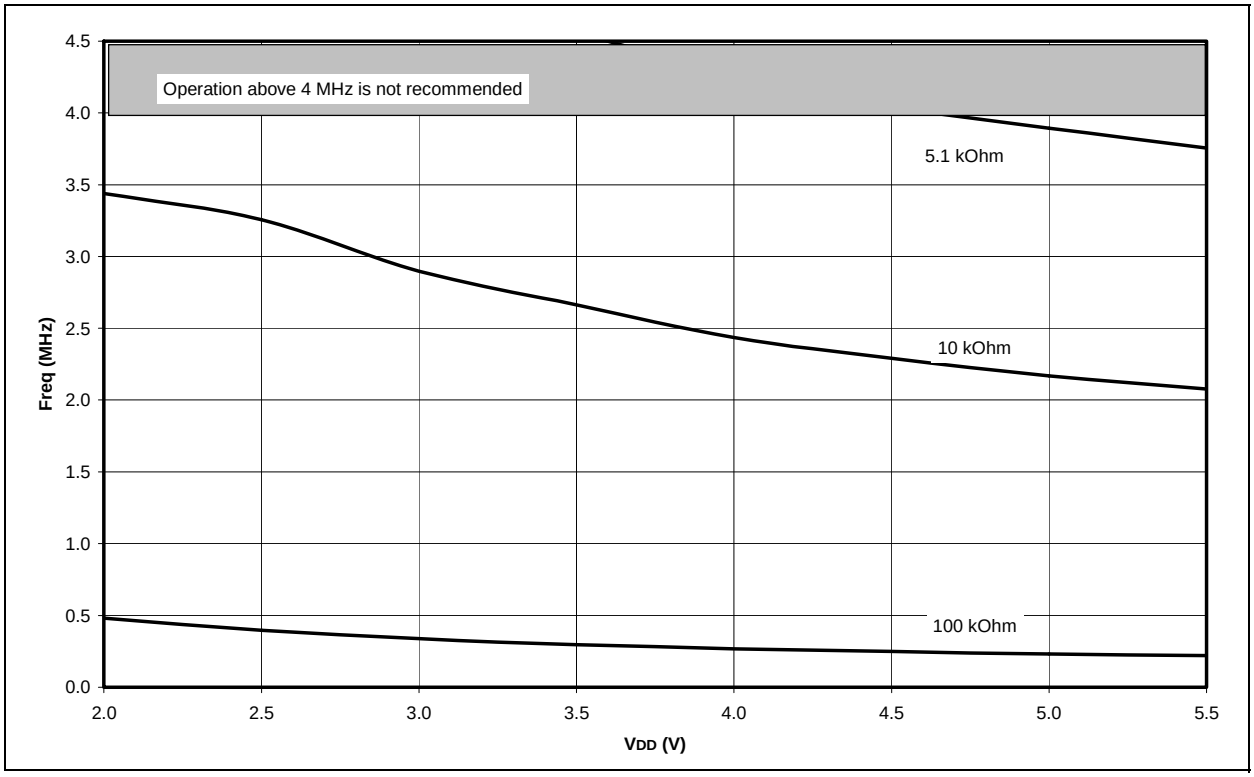

FIGURE 18-8: AVERAGE FOSC vs. VDD FOR VARIOUS VALUES OF R (RC MODE, C = 100 pF, +25°C)

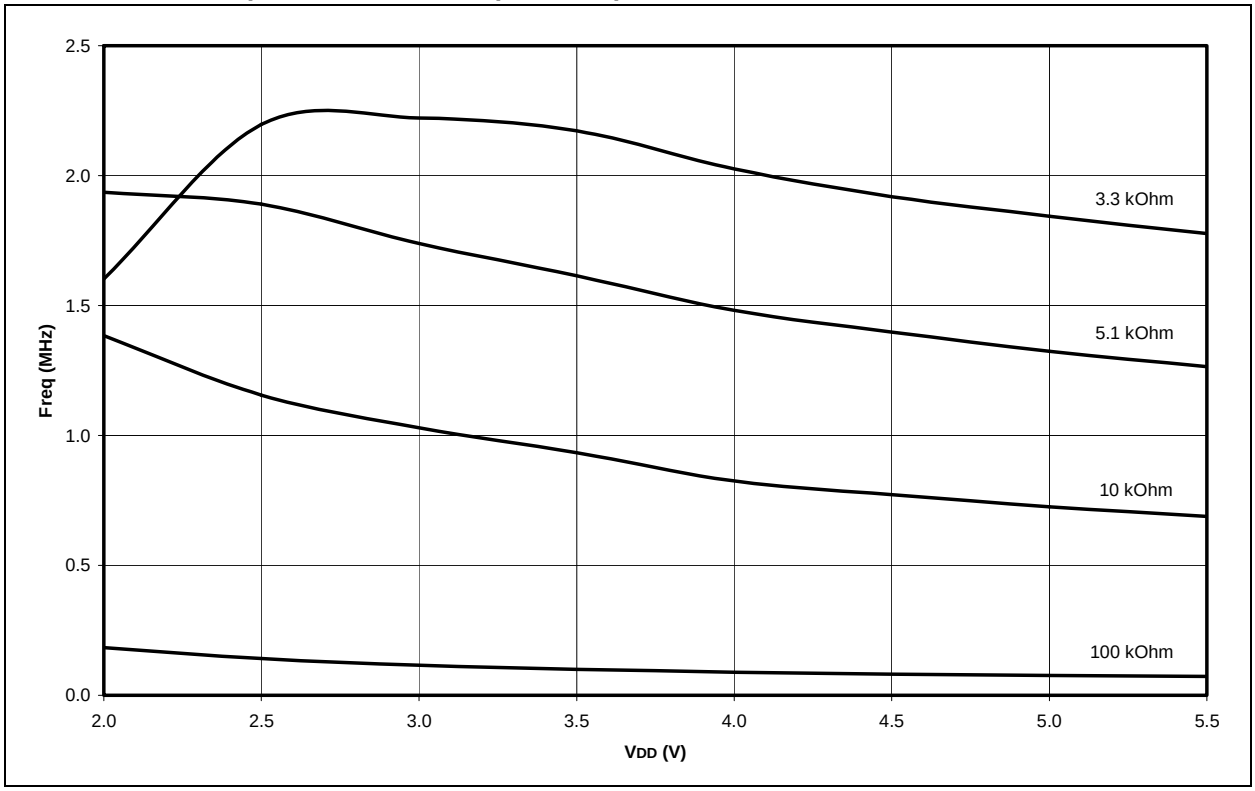

© 2001-2013 Microchip Technology Inc.

FIGURE 18-9: AVERAGE FOSC vs. VDD FOR VARIOUS VALUES OF R (RC MODE, C = 300 pF, +25°C)

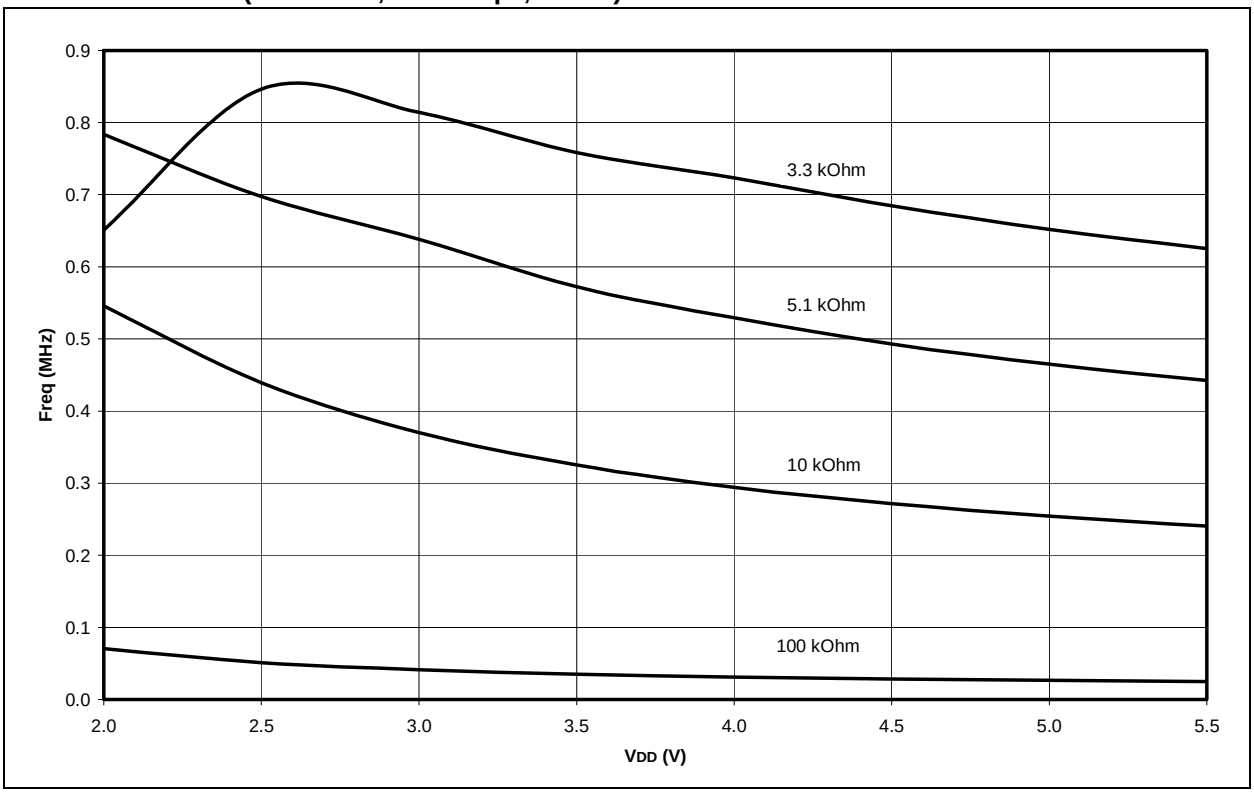

FIGURE 18-10: IPD vs. VDD, -40°C TO +125°C (SLEEP MODE, ALL PERIPHERALS DISABLED)

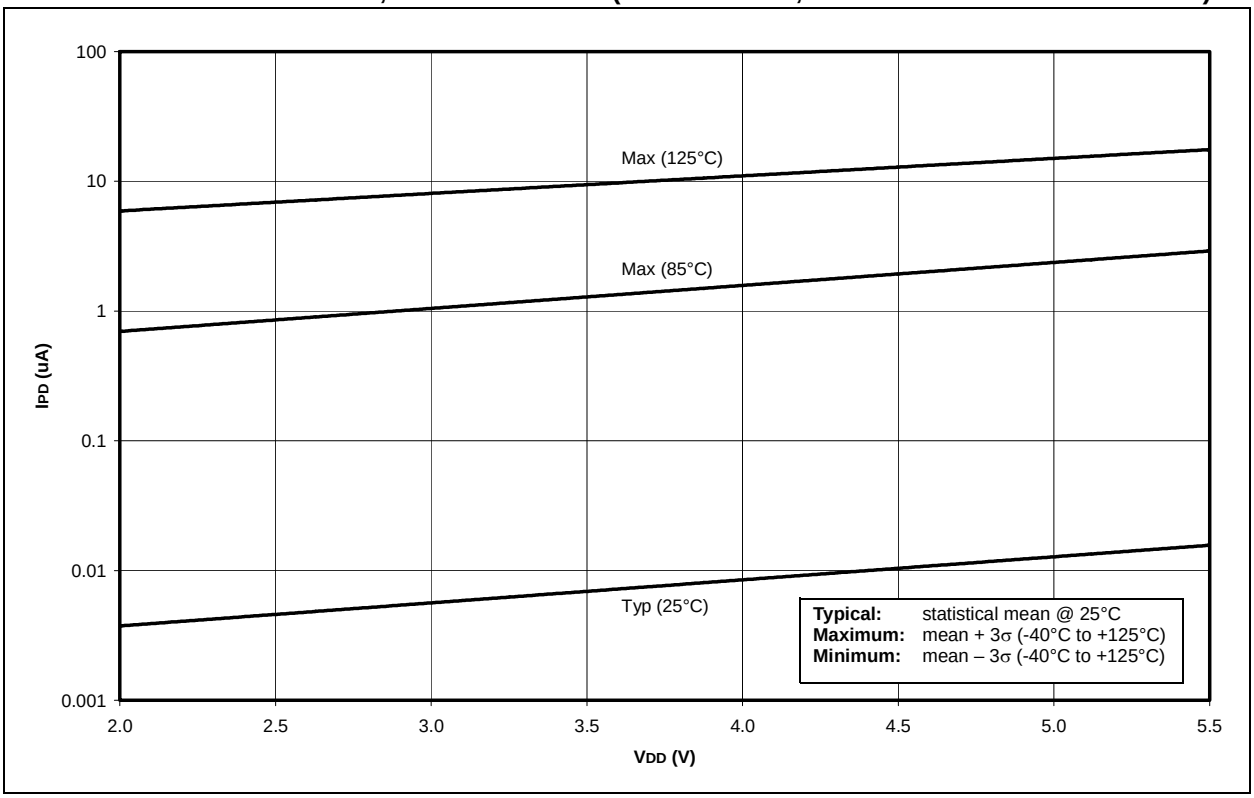

FIGURE 18-11: TYPICAL AND MAXIMUM ΔITMR1 vs. VDD OVER TEMPERATURE (-10°C TO +70°C, TIMER1 WITH OSCILLATOR, XTAL = 32 kHz, C1 AND C2 = 47 pF)

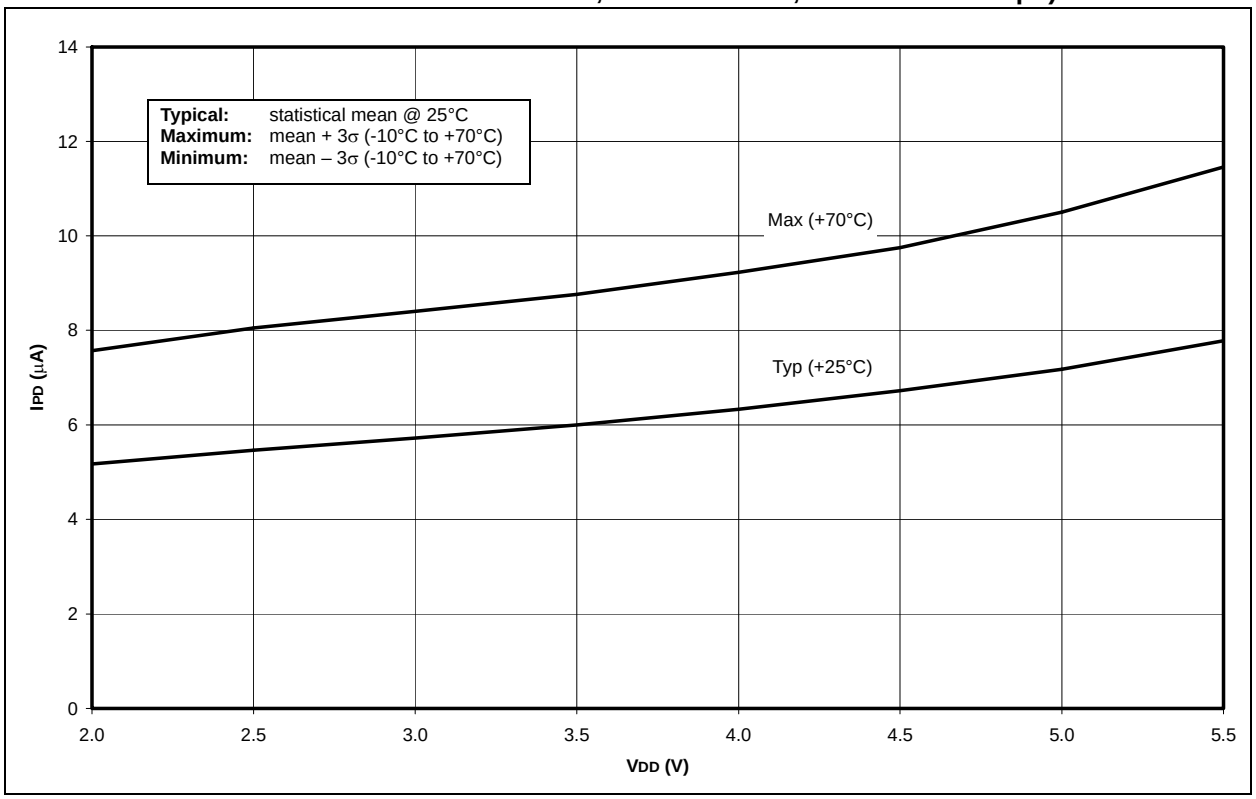

FIGURE 18-12: TYPICAL AND MAXIMUM ΔIWDT vs. VDD OVER TEMPERATURE (WDT ENABLED)

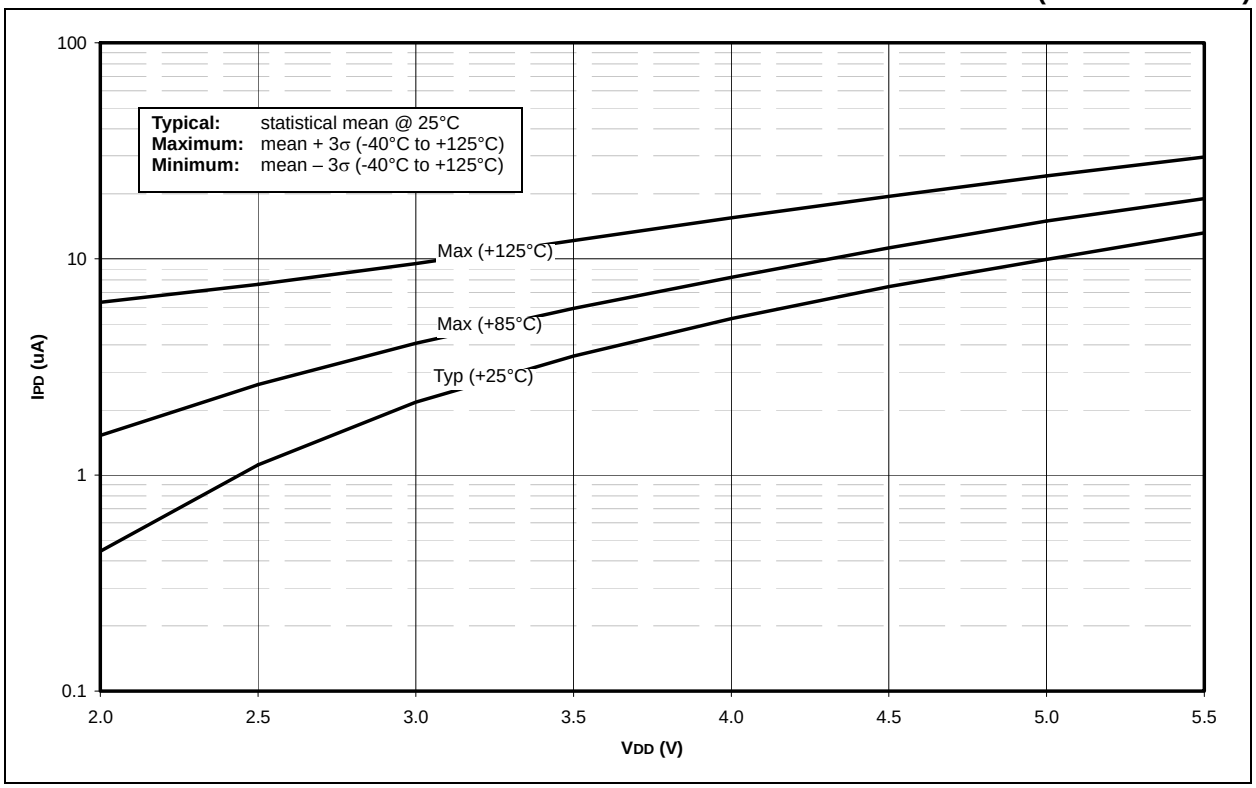

© 2001-2013 Microchip Technology Inc.

FIGURE 18-13: ΔIBOR vs. VDD OVER TEMPERATURE

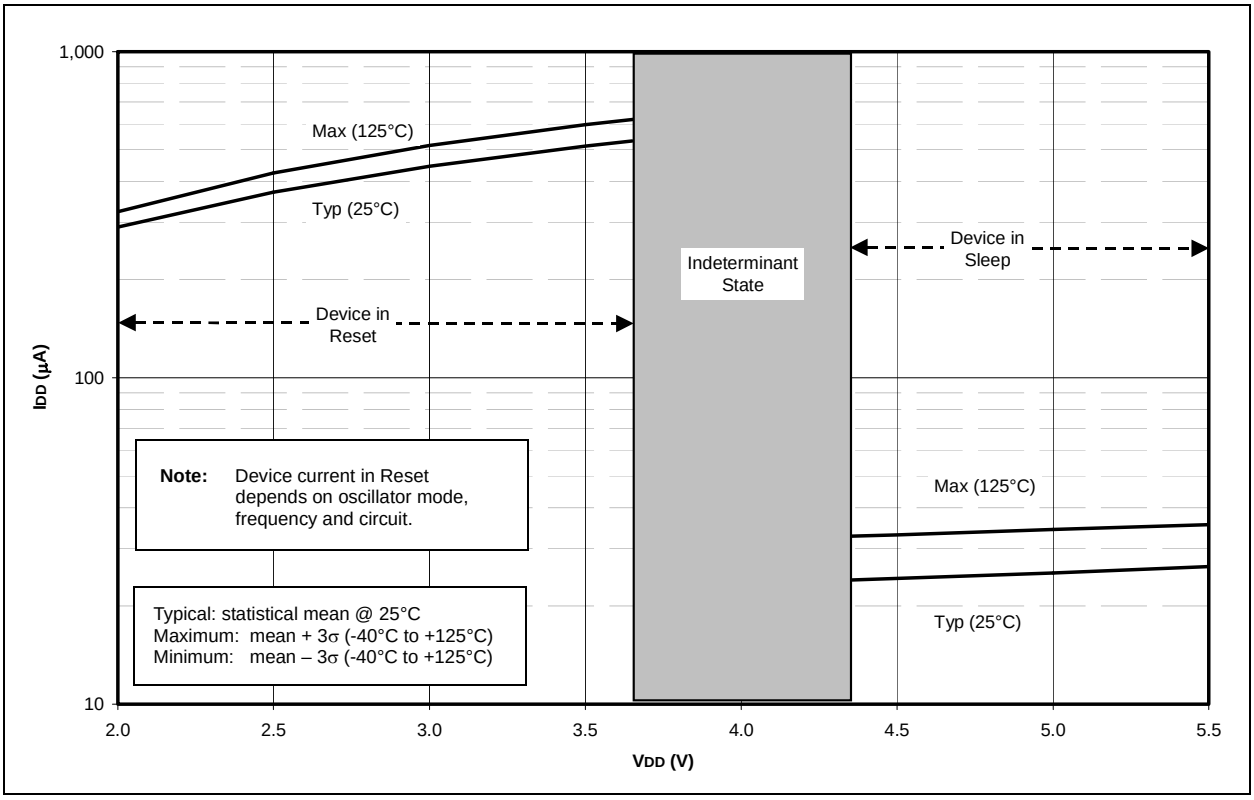

FIGURE 18-14: TYPICAL, MINIMUM AND MAXIMUM WDT PERIOD vs. VDD (-40°C TO +125°C)

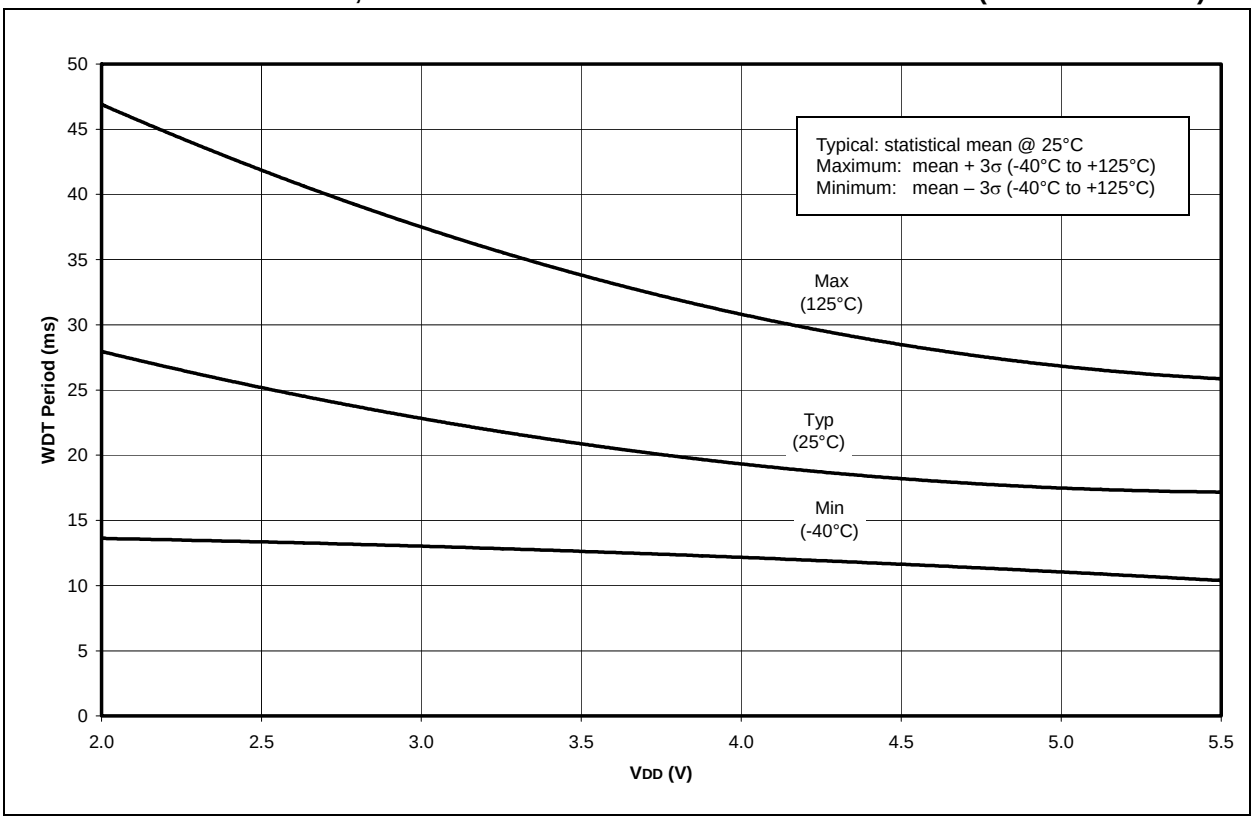

FIGURE 18-15: AVERAGE WDT PERIOD vs. VDD OVER TEMPERATURE (-40°C TO +125°C)

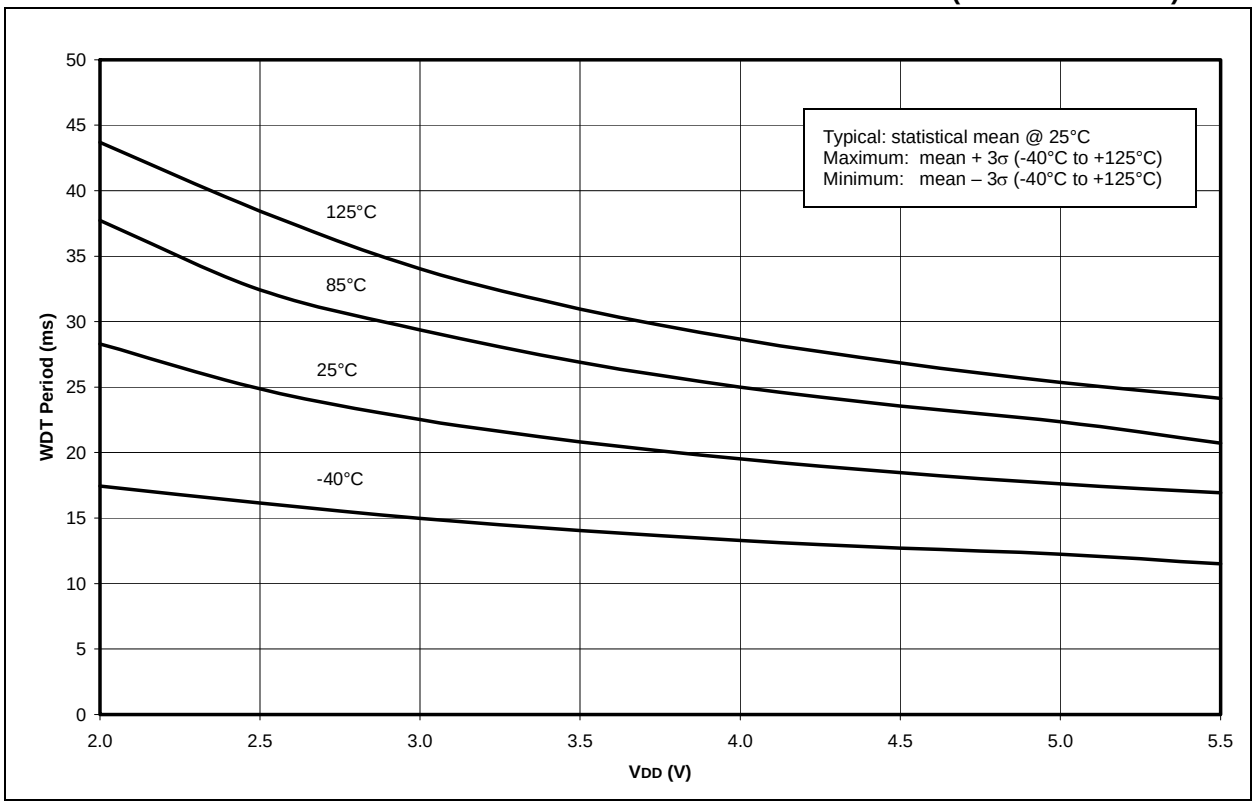

FIGURE 18-16: TYPICAL, MINIMUM AND MAXIMUM VOH vs. IOH (VDD = 5V, -40°C TO +125°C)

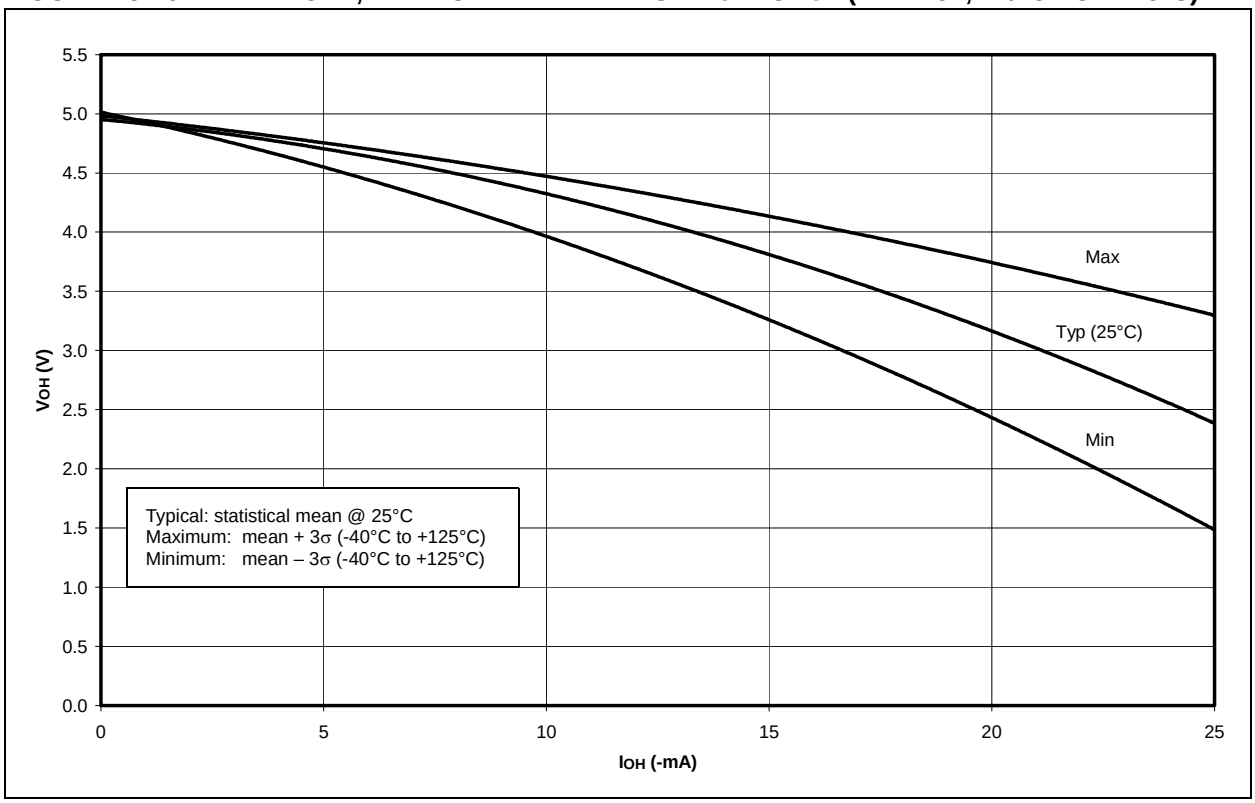

© 2001-2013 Microchip Technology Inc.

FIGURE 18-17: TYPICAL, MINIMUM AND MAXIMUM V_{OH} vs. I_{OH} (V_{DD} = 3V, -40°C TO +125°C)

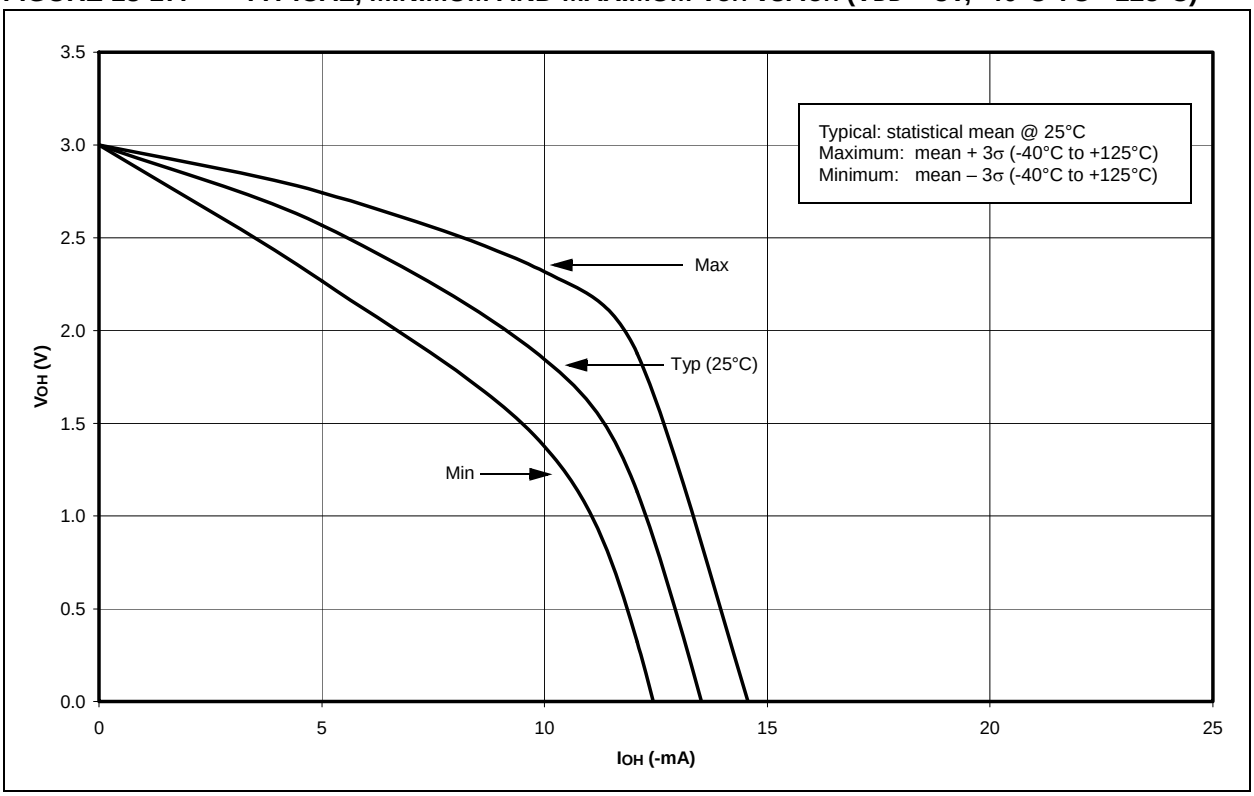

FIGURE 18-18: TYPICAL, MINIMUM AND MAXIMUM V_{OL} vs. I_{OL} (V_{DD} = 5V, -40°C TO +125°C)

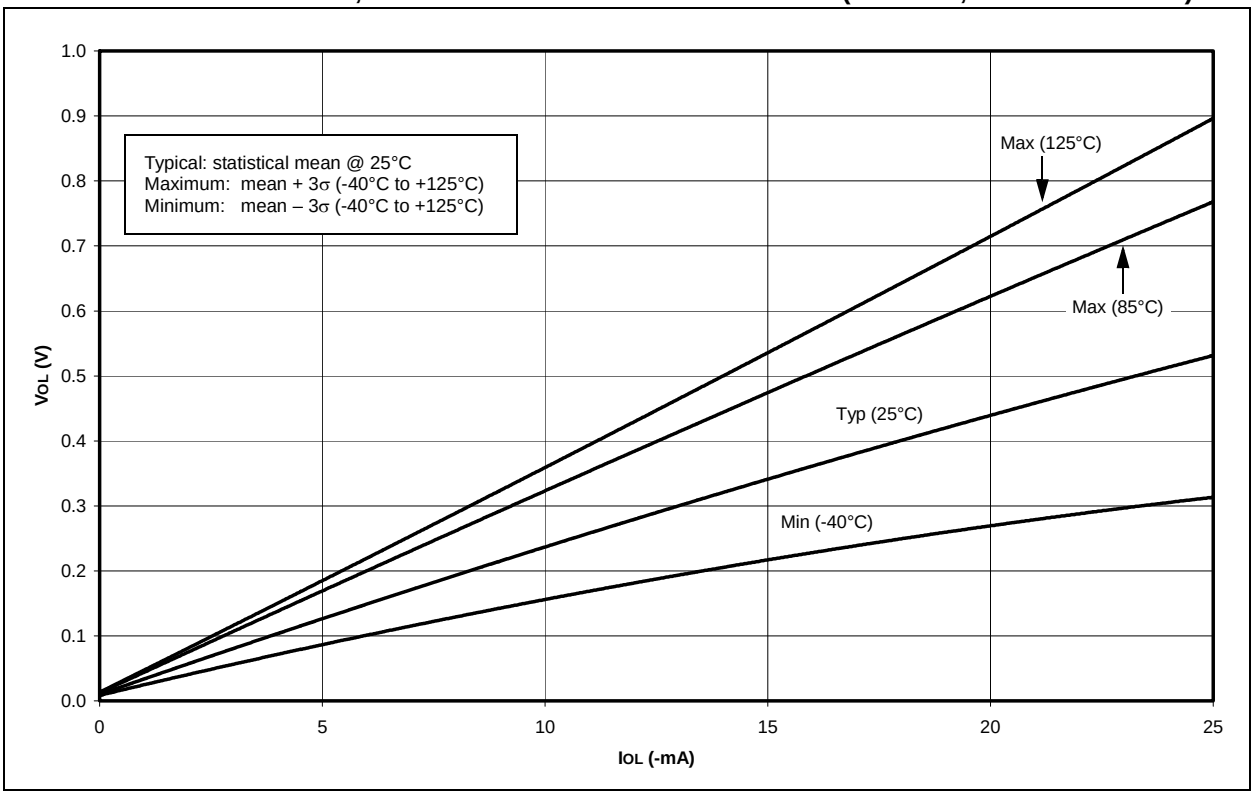

FIGURE 18-19: TYPICAL, MINIMUM AND MAXIMUM V_{OL} vs. I_{OL} (V_{DD} = 3V, -40°C TO +125°C)

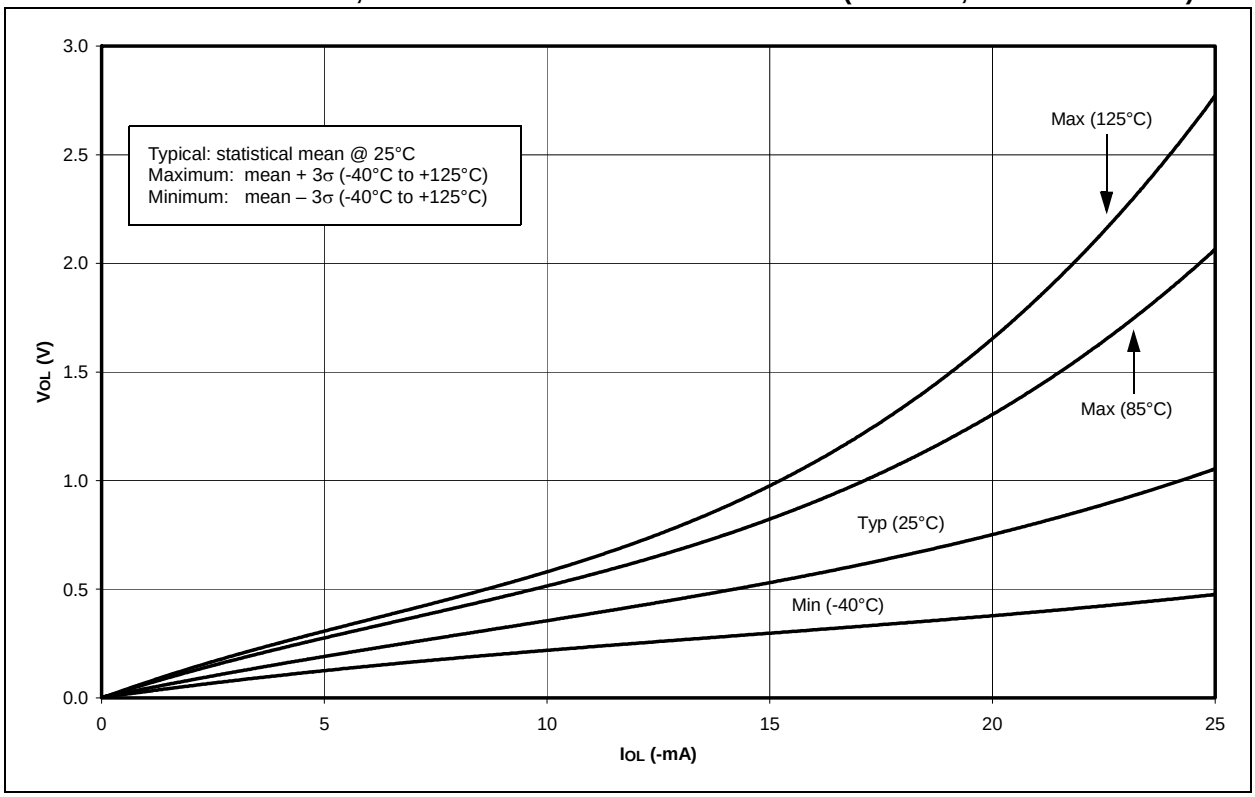

FIGURE 18-20: MINIMUM AND MAXIMUM V_{IN} vs. V_{DD} (TTL INPUT, -40°C TO +125°C)

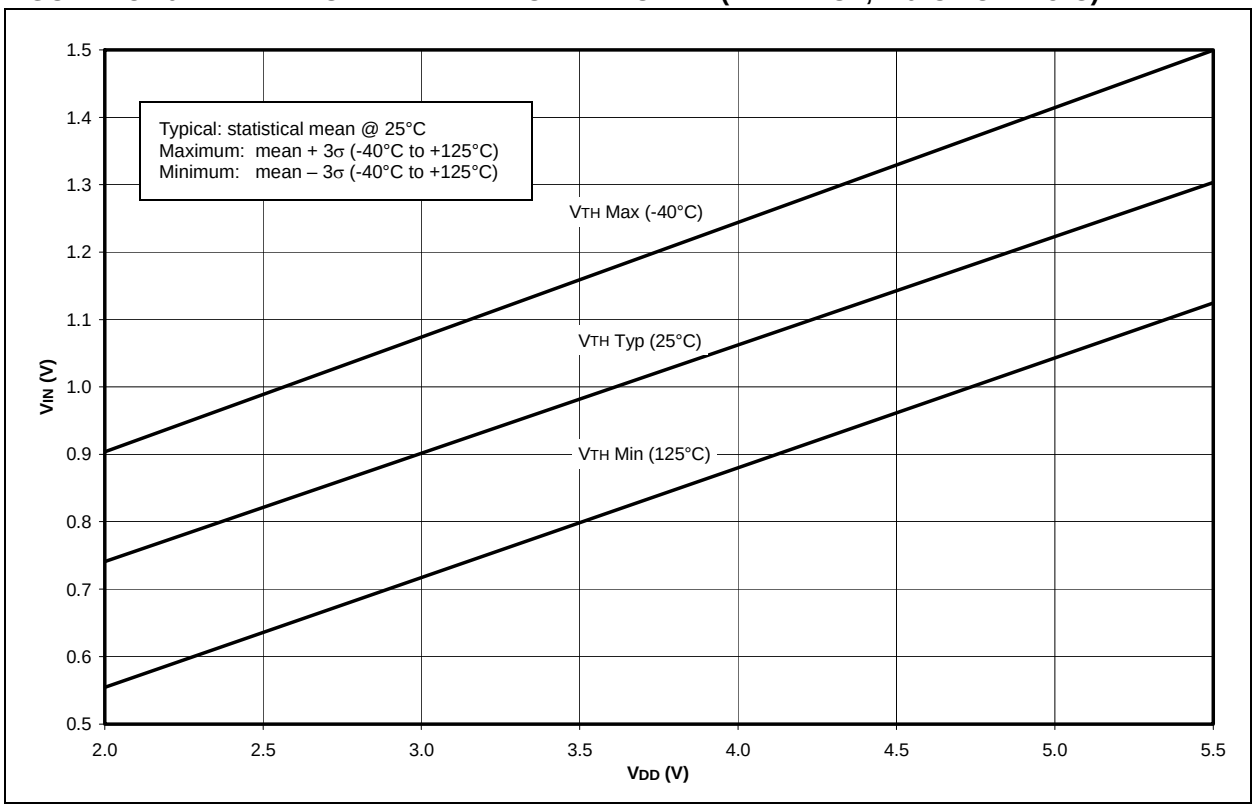

© 2001-2013 Microchip Technology Inc.

FIGURE 18-21: MINIMUM AND MAXIMUM VIN vs. VDD (ST INPUT, -40°C TO +125°C)

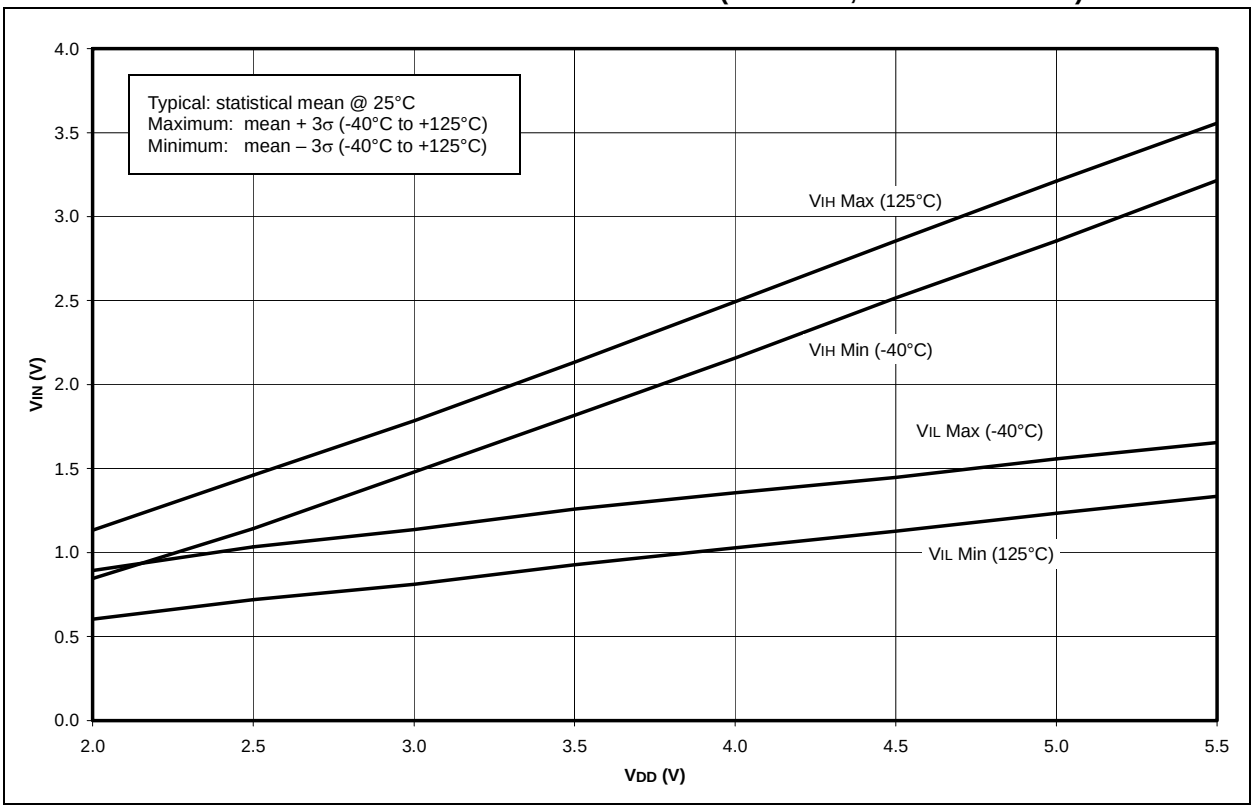

FIGURE 18-22: MINIMUM AND MAXIMUM VIN vs. VDD (I^2C INPUT, -40°C TO +125°C)

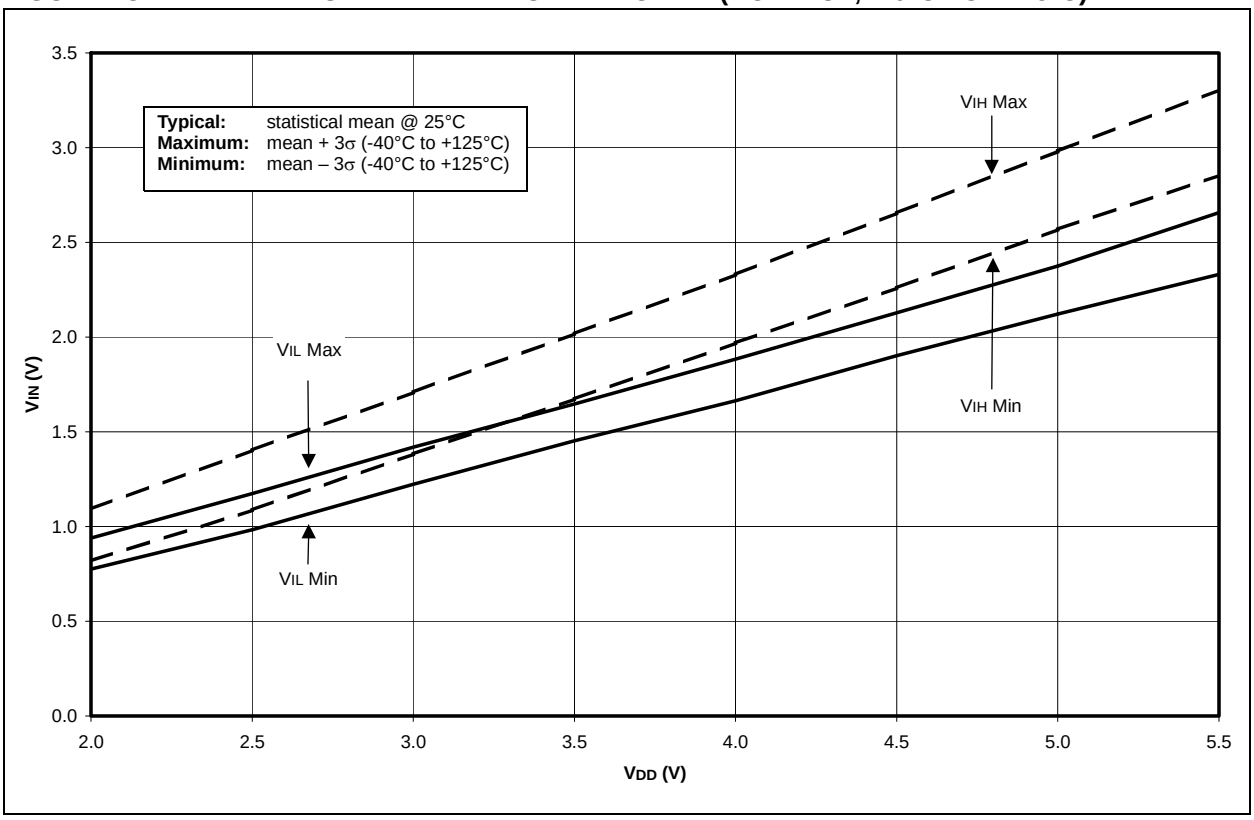

FIGURE 18-23: A/D NONLINEARITY vs. VREFH (VDD = VREFH, -40°C TO +125°C)

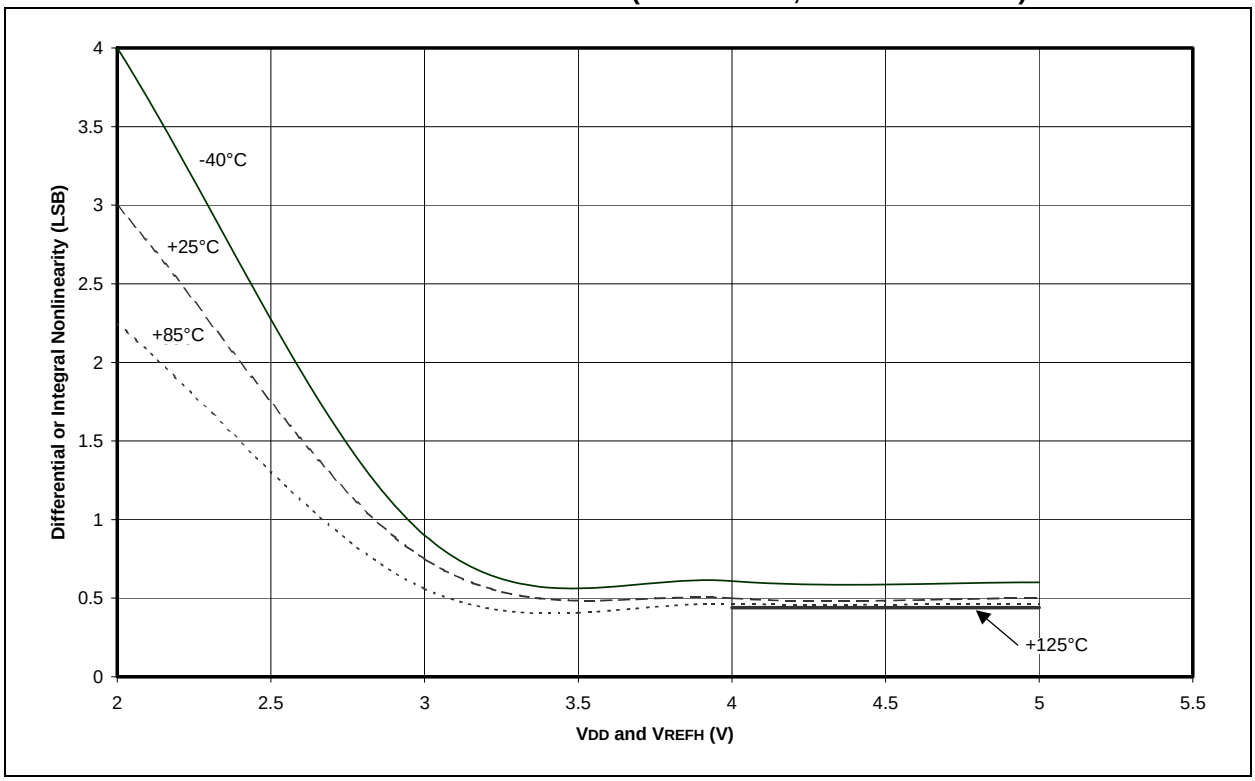

FIGURE 18-24: A/D NONLINEARITY vs. VREFH (VDD = 5V, -40°C TO +125°C)

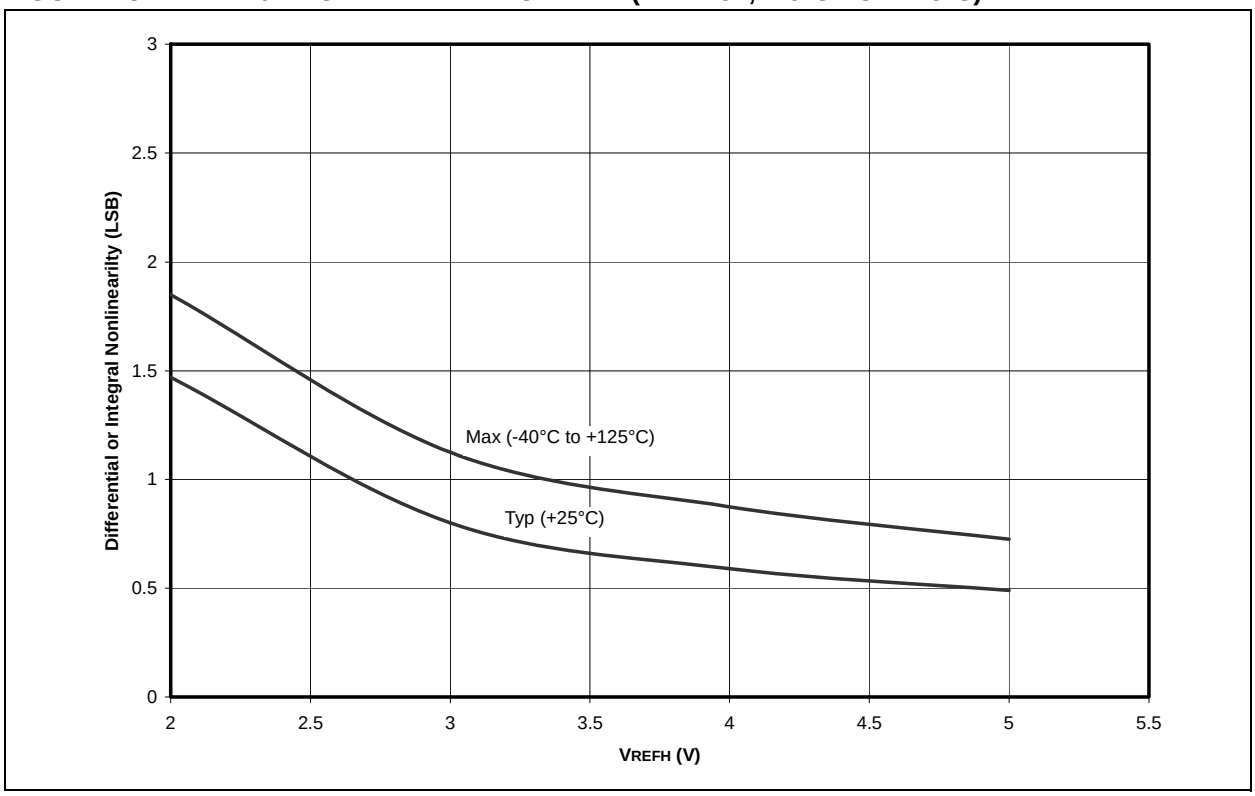

© 2001-2013 Microchip Technology Inc.

19.0 PACKAGING INFORMATION

19.1 Package Marking Information

40-Lead PDIP

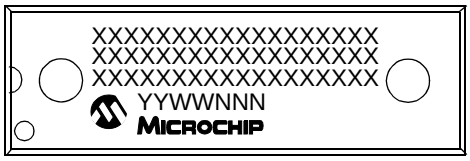

Example

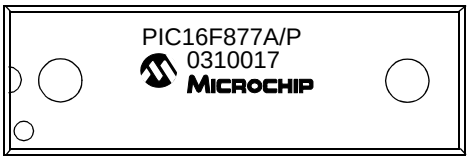

44-Lead TQFP

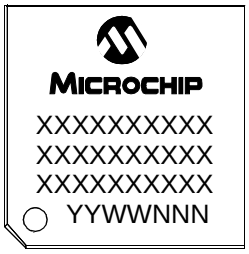

Example

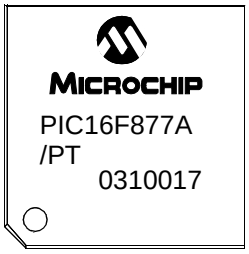

44-Lead PLCC

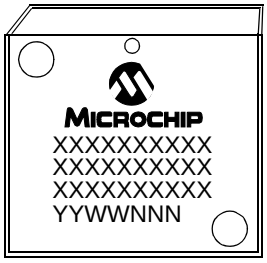

Example

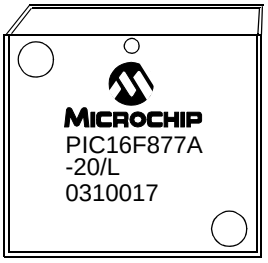

Legend:	XX...X	Customer-specific information
	Y	Year code (last digit of calendar year)
	YY	Year code (last 2 digits of calendar year)
	WW	Week code (week of January 1 is week ‘01’)
	NNN	Alphanumeric traceability code
	(e3)	Pb-free JEDEC designator for Matte Tin (Sn)
	*	This package is Pb-free. The Pb-free JEDEC designator ((e3)) can be found on the outer packaging for this package.

Note: In the event the full Microchip part number cannot be marked on one line, it will be carried over to the next line, thus limiting the number of available characters for customer-specific information.

Package Marking Information (Cont'd)

44-Lead QFN

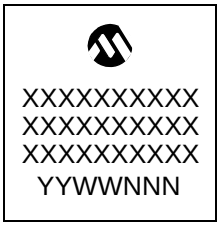

Example

28-Lead PDIP (Skinny DIP)

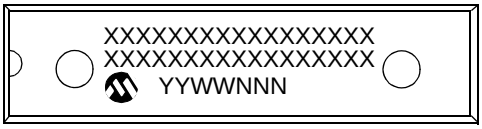

Example

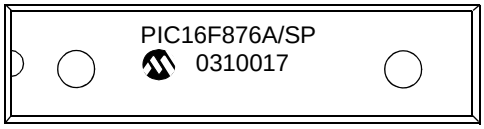

28-Lead SOIC

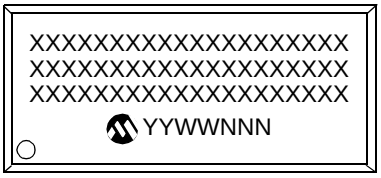

Example

28-Lead SSOP

Example

28-Lead QFN

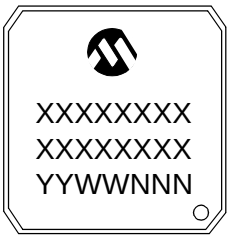

Example

© 2001-2013 Microchip Technology Inc.

40-Lead Plastic Dual In-line (P) – 600 mil (PDIP)

Note: For the most current package drawings, please see the Microchip Packaging Specification located at http://www.microchip.com/packaging

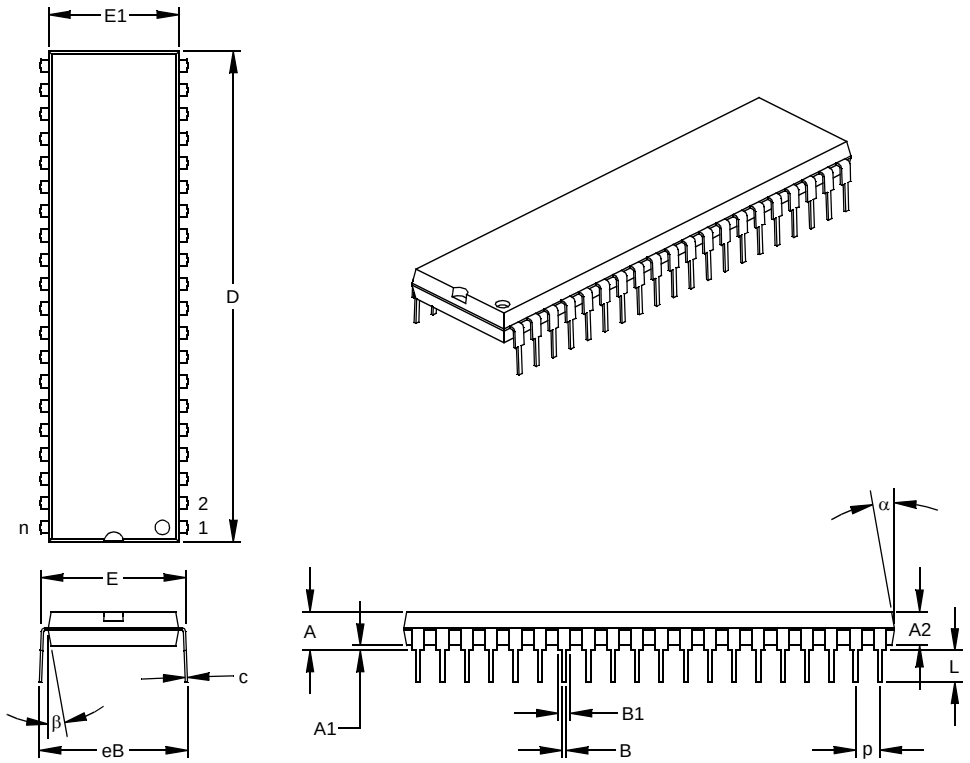

Units		INCHES*			MILLIMETERS		
Dimension Limits		MIN	NOM	MAX	MIN	NOM	MAX
Number of Pins	n		40			40	
Pitch	p		.100			2.54	
Top to Seating Plane	A	.160	.175	.190	4.06	4.45	4.83
Molded Package Thickness	A2	.140	.150	.160	3.56	3.81	4.06
Base to Seating Plane	A1	.015			0.38		
Shoulder to Shoulder Width	E	.595	.600	.625	15.11	15.24	15.88
Molded Package Width	E1	.530	.545	.560	13.46	13.84	14.22
Overall Length	D	2.045	2.058	2.065	51.94	52.26	52.45
Tip to Seating Plane	L	.120	.130	.135	3.05	3.30	3.43
Lead Thickness	c	.008	.012	.015	0.20	0.29	0.38
Upper Lead Width	B1	.030	.050	.070	0.76	1.27	1.78
Lower Lead Width	B	.014	.018	.022	0.36	0.46	0.56
Overall Row Spacing §	eB	.620	.650	.680	15.75	16.51	17.27
Mold Draft Angle Top	α	5	10	15	5	10	15
Mold Draft Angle Bottom	β	5	10	15	5	10	15

* Controlling Parameter
§ Significant Characteristic

Notes:
Dimensions D and E1 do not include mold flash or protrusions. Mold flash or protrusions shall not exceed .010” (0.254mm) per side.
JEDEC Equivalent: MO-011
Drawing No. C04-016

44-Lead Plastic Thin Quad Flatpack (PT) 10x10x1 mm Body, 1.0/0.10 mm Lead Form (TQFP)

Note: For the most current package drawings, please see the Microchip Packaging Specification located at http://www.microchip.com/packaging

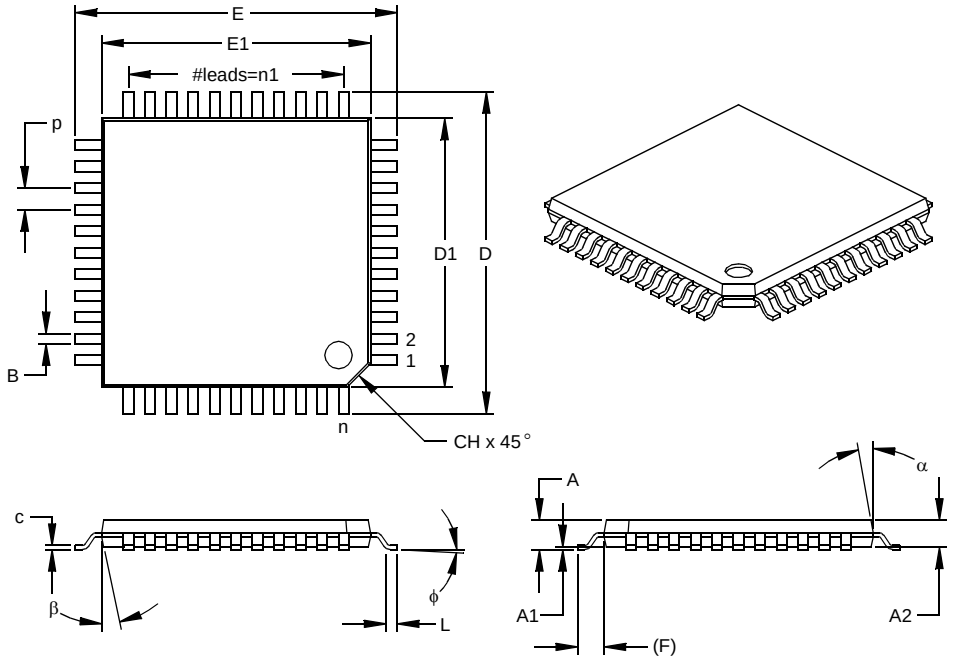

Units		INCHES			MILLIMETERS*		
Dimension Limits		MIN	NOM	MAX	MIN	NOM	MAX
Number of Pins	n		44			44	
Pitch	p		.031			0.80	
Pins per Side	n1		11			11	
Overall Height	A	.039	.043	.047	1.00	1.10	1.20
Molded Package Thickness	A2	.037	.039	.041	0.95	1.00	1.05
Standoff §	A1	.002	.004	.006	0.05	0.10	0.15
Foot Length	L	.018	.024	.030	0.45	0.60	0.75
Footprint (Reference)	(F)		.039		1.00		
Foot Angle	ϕ	0	3.5	7	0	3.5	7
Overall Width	E	.463	.472	.482	11.75	12.00	12.25
Overall Length	D	.463	.472	.482	11.75	12.00	12.25
Molded Package Width	E1	.390	.394	.398	9.90	10.00	10.10
Molded Package Length	D1	.390	.394	.398	9.90	10.00	10.10
Lead Thickness	c	.004	.006	.008	0.09	0.15	0.20
Lead Width	B	.012	.015	.017	0.30	0.38	0.44
Pin 1 Corner Chamfer	CH	.025	.035	.045	0.64	0.89	1.14
Mold Draft Angle Top	α	5	10	15	5	10	15
Mold Draft Angle Bottom	β	5	10	15	5	10	15

* Controlling Parameter
§ Significant Characteristic

Notes:
Dimensions D1 and E1 do not include mold flash or protrusions. Mold flash or protrusions shall not exceed .010” (0.254mm) per side.
JEDEC Equivalent: MS-026
Drawing No. C04-076

© 2001-2013 Microchip Technology Inc.

44-Lead Plastic Leaded Chip Carrier (L) – Square (PLCC)

Note: For the most current package drawings, please see the Microchip Packaging Specification located at http://www.microchip.com/packaging

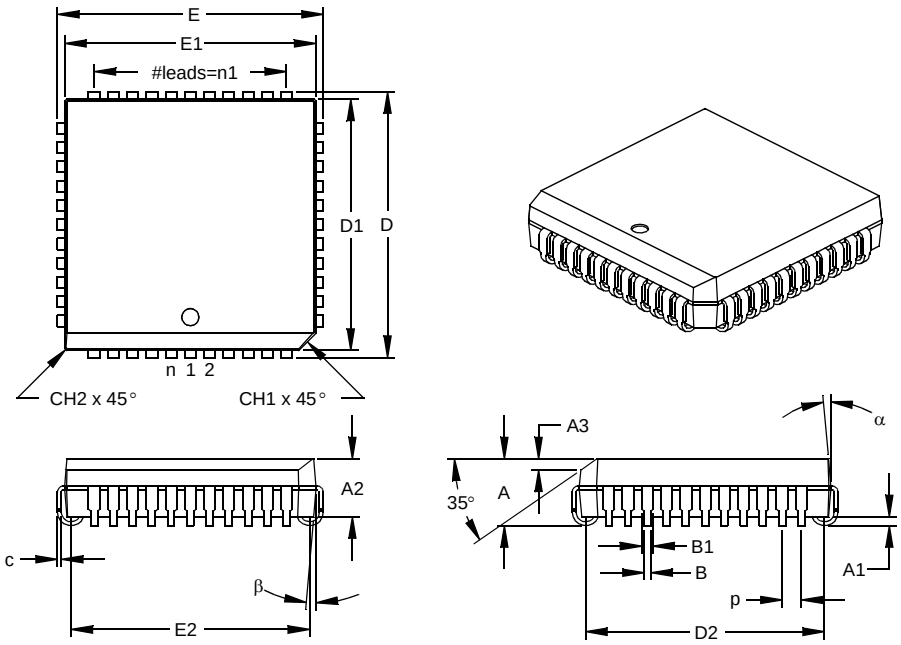

Units		INCHES*			MILLIMETERS		
Dimension Limits		MIN	NOM	MAX	MIN	NOM	MAX
Number of Pins	n		44			44	
Pitch	p		.050			1.27	
Pins per Side	n1		11			11	
Overall Height	A	.165	.173	.180	4.19	4.39	4.57
Molded Package Thickness	A2	.145	.153	.160	3.68	3.87	4.06
Standoff §	A1	.020	.028	.035	0.51	0.71	0.89
Side 1 Chamfer Height	A3	.024	.029	.034	0.61	0.74	0.86
Corner Chamfer 1	CH1	.040	.045	.050	1.02	1.14	1.27
Corner Chamfer (others)	CH2	.000	.005	.010	0.00	0.13	0.25
Overall Width	E	.685	.690	.695	17.40	17.53	17.65
Overall Length	D	.685	.690	.695	17.40	17.53	17.65
Molded Package Width	E1	.650	.653	.656	16.51	16.59	16.66
Molded Package Length	D1	.650	.653	.656	16.51	16.59	16.66
Footprint Width	E2	.590	.620	.630	14.99	15.75	16.00
Footprint Length	D2	.590	.620	.630	14.99	15.75	16.00
Lead Thickness	c	.008	.011	.013	0.20	0.27	0.33
Upper Lead Width	B1	.026	.029	.032	0.66	0.74	0.81
Lower Lead Width	B	.013	.020	.021	0.33	0.51	0.53
Mold Draft Angle Top	α	0	5	10	0	5	10
Mold Draft Angle Bottom	β	0	5	10	0	5	10

* Controlling Parameter
§ Significant Characteristic
Notes:
Dimensions D and E1 do not include mold flash or protrusions. Mold flash or protrusions shall not exceed .010” (0.254mm) per side.
JEDEC Equivalent: MO-047
Drawing No. C04-048

44-Lead Plastic Quad Flat No Lead Package (ML) 8x8 mm Body (QFN)

Note: For the most current package drawings, please see the Microchip Packaging Specification located at http://www.microchip.com/packaging

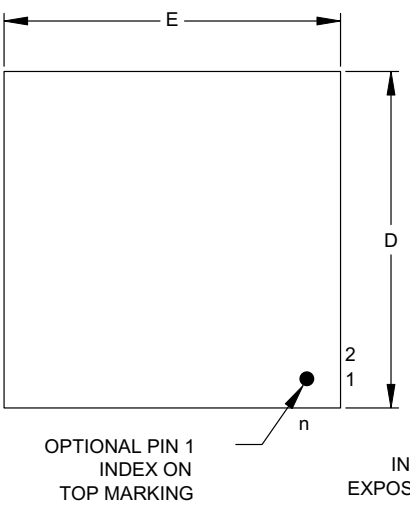

TOP VIEW

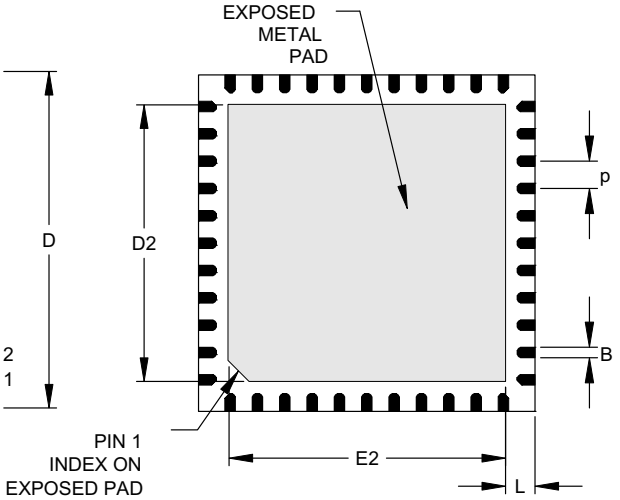

BOTTOM VIEW

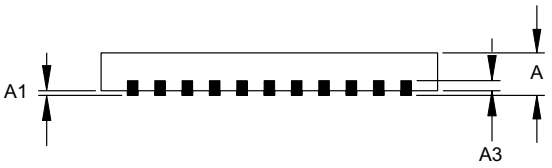

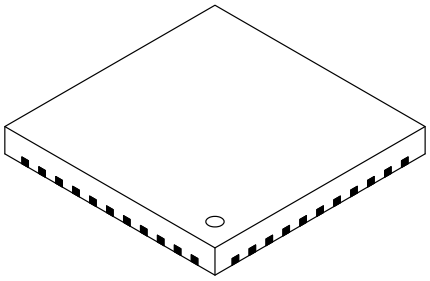

Units		INCHES			MILLIMETERS*		
Dimension Limits		MIN	NOM	MAX	MIN	NOM	MAX
Number of Pins	n		44			44	
Pitch	p		.026 BSC			0.65 BSC	
Overall Height	A	.031	.035	.039	0.80	0.90	1.00
Standoff	A1	.000	.001	.002	0	0.02	0.05
Base Thickness	A3		.010 REF			0.25 REF	
Overall Width	E		.315 BSC			8.00 BSC	
Exposed Pad Width	E2	.262	.268	.274	6.65	6.80	6.95
Overall Length	D		.315 BSC			8.00 BSC	
Exposed Pad Length	D2	.262	.268	.274	6.65	6.80	6.95
Lead Width	B	.012	.013	.013	0.30	0.33	0.35
Lead Length	L	.014	.016	.018	0.35	0.40	0.45

*Controlling Parameter

Notes:

Dimensions D and E1 do not include mold flash or protrusions. Mold flash or protrusions shall not exceed .010" (0.254mm) per side.

JEDEC equivalent: M0-220

Drawing No. C04-103

© 2001-2013 Microchip Technology Inc.

28-Lead Skinny Plastic Dual In-line (SP) – 300 mil (PDIP)

Note: For the most current package drawings, please see the Microchip Packaging Specification located at http://www.microchip.com/packaging

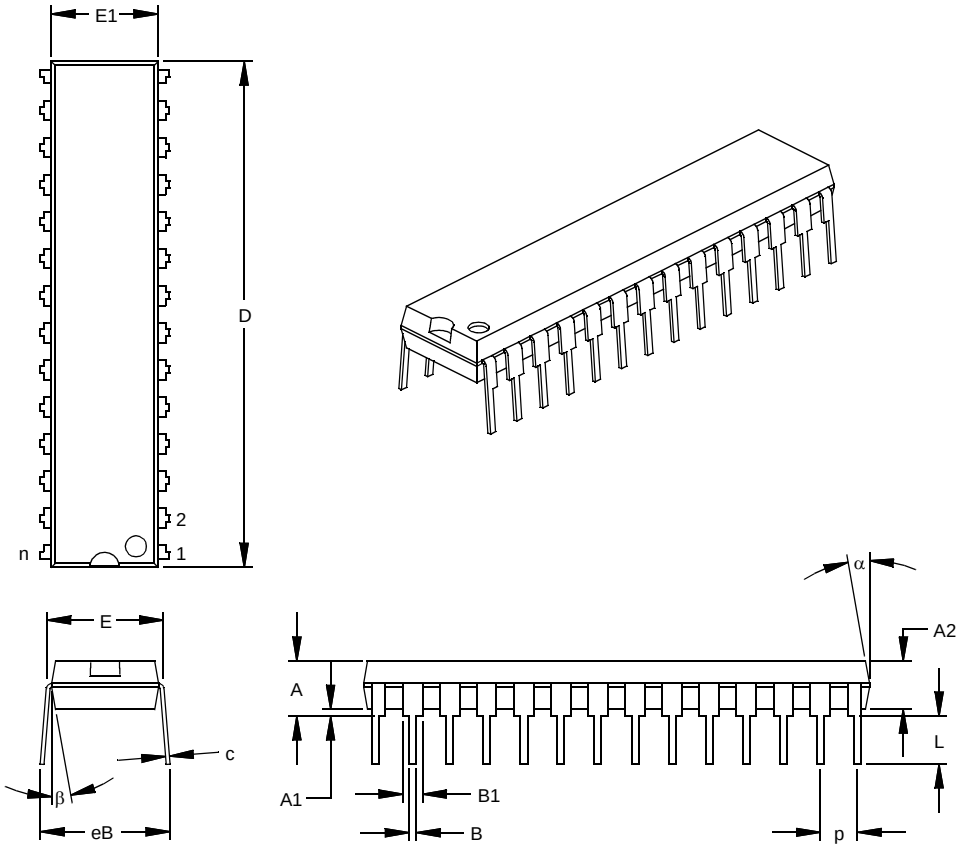

Units		INCHES*			MILLIMETERS		
Dimension Limits		MIN	NOM	MAX	MIN	NOM	MAX
Number of Pins	n		28			28	
Pitch	p		.100			2.54	
Top to Seating Plane	A	.140	.150	.160	3.56	3.81	4.06
Molded Package Thickness	A2	.125	.130	.135	3.18	3.30	3.43
Base to Seating Plane	A1	.015			0.38		
Shoulder to Shoulder Width	E	.300	.310	.325	7.62	7.87	8.26
Molded Package Width	E1	.275	.285	.295	6.99	7.24	7.49
Overall Length	D	1.345	1.365	1.385	34.16	34.67	35.18
Tip to Seating Plane	L	.125	.130	.135	3.18	3.30	3.43
Lead Thickness	c	.008	.012	.015	0.20	0.29	0.38
Upper Lead Width	B1	.040	.053	.065	1.02	1.33	1.65
Lower Lead Width	B	.016	.019	.022	0.41	0.48	0.56
Overall Row Spacing §	eB	.320	.350	.430	8.13	8.89	10.92
Mold Draft Angle Top	α	5	10	15	5	10	15
Mold Draft Angle Bottom	β	5	10	15	5	10	15

* Controlling Parameter
§ Significant Characteristic
Notes:
Dimension D and E1 do not include mold flash or protrusions. Mold flash or protrusions shall not exceed .010” (0.254mm) per side.
JEDEC Equivalent: MO-095
Drawing No. C04-070

28-Lead Plastic Small Outline (SO) – Wide, 300 mil (SOIC)

Note: For the most current package drawings, please see the Microchip Packaging Specification located at http://www.microchip.com/packaging

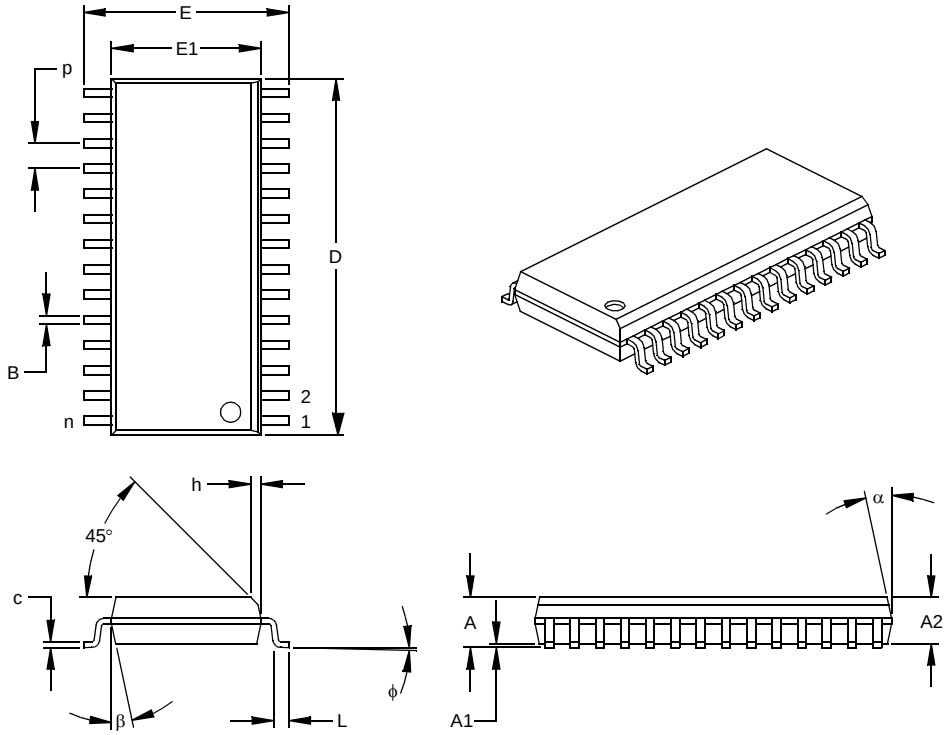

Units		INCHES*			MILLIMETERS		
Dimension Limits		MIN	NOM	MAX	MIN	NOM	MAX
Number of Pins	n		28			28	
Pitch	p		.050			1.27	
Overall Height	A	.093	.099	.104	2.36	2.50	2.64
Molded Package Thickness	A2	.088	.091	.094	2.24	2.31	2.39
Standoff §	A1	.004	.008	.012	0.10	0.20	0.30
Overall Width	E	.394	.407	.420	10.01	10.34	10.67
Molded Package Width	E1	.288	.295	.299	7.32	7.49	7.59
Overall Length	D	.695	.704	.712	17.65	17.87	18.08
Chamfer Distance	h	.010	.020	.029	0.25	0.50	0.74
Foot Length	L	.016	.033	.050	0.41	0.84	1.27
Foot Angle Top	φ	0	4	8	0	4	8
Lead Thickness	c	.009	.011	.013	0.23	0.28	0.33
Lead Width	B	.014	.017	.020	0.36	0.42	0.51
Mold Draft Angle Top	α	0	12	15	0	12	15
Mold Draft Angle Bottom	β	0	12	15	0	12	15

* Controlling Parameter
§ Significant Characteristic

Notes:
Dimensions D and E1 do not include mold flash or protrusions. Mold flash or protrusions shall not exceed .010” (0.254mm) per side.
JEDEC Equivalent: MS-013
Drawing No. C04-052

© 2001-2013 Microchip Technology Inc.

28-Lead Plastic Shrink Small Outline (SS) – 209 mil, 5.30 mm (SSOP)

Note: For the most current package drawings, please see the Microchip Packaging Specification located at http://www.microchip.com/packaging

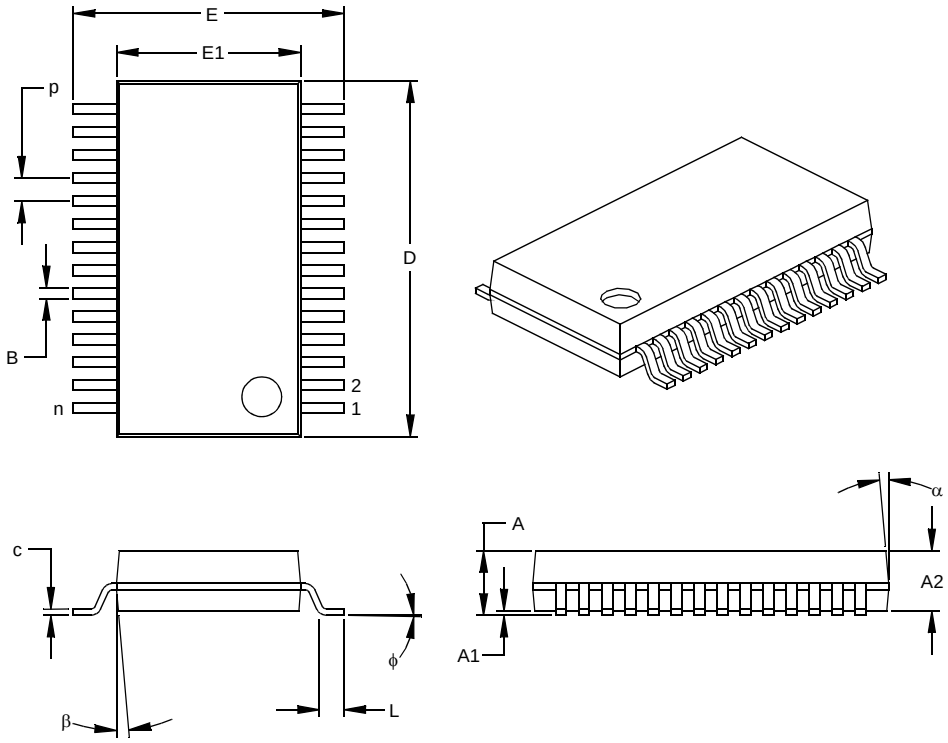

Units		INCHES			MILLIMETERS*		
Dimension Limits		MIN	NOM	MAX	MIN	NOM	MAX
Number of Pins	n		28			28	
Pitch	p		.026			0.65	
Overall Height	A	.068	.073	.078	1.73	1.85	1.98
Molded Package Thickness	A2	.064	.068	.072	1.63	1.73	1.83
Standoff §	A1	.002	.006	.010	0.05	0.15	0.25
Overall Width	E	.299	.309	.319	7.59	7.85	8.10
Molded Package Width	E1	.201	.207	.212	5.11	5.25	5.38
Overall Length	D	.396	.402	.407	10.06	10.20	10.34
Foot Length	L	.022	.030	.037	0.56	0.75	0.94
Lead Thickness	c	.004	.007	.010	0.10	0.18	0.25
Foot Angle	ϕ	0	4	8	0.00	101.60	203.20
Lead Width	B	.010	.013	.015	0.25	0.32	0.38
Mold Draft Angle Top	α	0	5	10	0	5	10
Mold Draft Angle Bottom	β	0	5	10	0	5	10

* Controlling Parameter
§ Significant Characteristic

Notes:
Dimensions D and E1 do not include mold flash or protrusions. Mold flash or protrusions shall not exceed .010” (0.254mm) per side.
JEDEC Equivalent: MS-150
Drawing No. C04-073

28-Lead Plastic Quad Flat No Lead Package (ML) 6x6 mm Body, Punch Singulated (QFN)

Note: For the most current package drawings, please see the Microchip Packaging Specification located at http://www.microchip.com/packaging

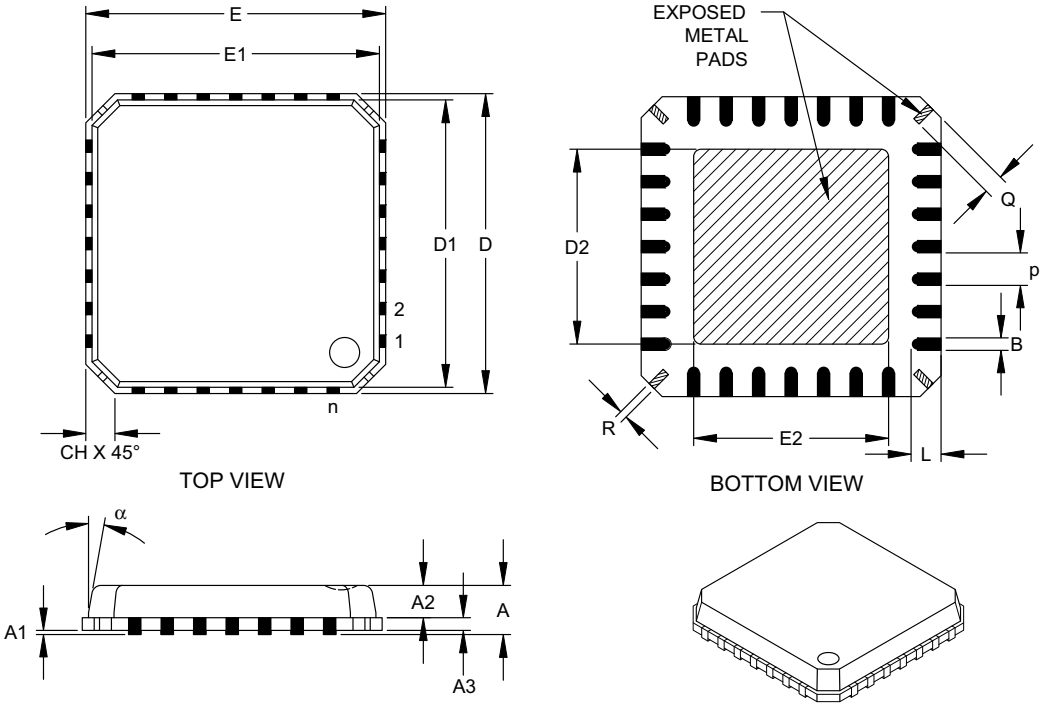

Units		INCHES			MILLIMETERS*		
Dimension Limits		MIN	NOM	MAX	MIN	NOM	MAX
Number of Pins	n		28			28	
Pitch	p		.026 BSC			0.65 BSC	
Overall Height	A		.033	.039		0.85	1.00
Molded Package Thickness	A2		.026	.031		0.65	0.80
Standoff	A1	.000	.0004	.002	0.00	0.01	0.05
Base Thickness	A3		.008 REF			0.20 REF	
Overall Width	E		.236 BSC			6.00 BSC	
Molded Package Width	E1		.226 BSC			5.75 BSC	
Exposed Pad Width	E2	.140	.146	.152	3.55	3.70	3.85
Overall Length	D		.236 BSC			6.00 BSC	
Molded Package Length	D1		.226 BSC			5.75 BSC	
Exposed Pad Length	D2	.140	.146	.152	3.55	3.70	3.85
Lead Width	B	.009	.011	.014	0.23	0.28	0.35
Lead Length	L	.020	.024	.030	0.50	0.60	0.75
Tie Bar Width	R	.005	.007	.010	0.13	0.17	0.23
Tie Bar Length	Q	.012	.016	.026	0.30	0.40	0.65
Chamfer	CH	.009	.017	.024	0.24	0.42	0.60
Mold Draft Angle Top	α			12°			12°

*Controlling Parameter

Notes:

Dimensions D and E1 do not include mold flash or protrusions. Mold flash or protrusions shall not exceed .010" (0.254mm) per side.

JEDEC equivalent: mMO-220

Drawing No. C04-114

© 2001-2013 Microchip Technology Inc.

APPENDIX A: REVISION HISTORY

Revision A (November 2001)

Original data sheet for PIC16F87XA devices. The devices presented are enhanced versions of the PIC16F87X microcontrollers discussed in the "*PIC16F87X Data Sheet"* (DS30292).

Revision B (October 2003)

This revision includes the DC and AC Characteristics Graphs and Tables. The Electrical Specifications in **Section 17.0 "Electrical Characteristics"** have been updated and there have been minor corrections to the data sheet text.

Revision C (January 2013)

Added a note to each package outline drawing.

APPENDIX B: DEVICE DIFFERENCES

The differences between the devices in this data sheet are listed in Table B-1.

TABLE B-1: DIFFERENCES BETWEEN DEVICES IN THE PIC16F87XA FAMILY

	PIC16F873A	PIC16F874A	PIC16F876A	PIC16F877A
Flash Program Memory (14-bit words)	4K	4K	8K	8K
Data Memory (bytes)	192	192	368	368
EEPROM Data Memory (bytes)	128	128	256	256
Interrupts	14	15	14	15
I/O Ports	Ports A, B, C	Ports A, B, C, D, E	Ports A, B, C	Ports A, B, C, D, E
Serial Communications	MSSP, USART	MSSP, USART	MSSP, USART	MSSP, USART
Parallel Slave Port	No	Yes	No	Yes
10-bit Analog-to-Digital Module	5 input channels	8 input channels	5 input channels	8 input channels
Packages	28-pin PDIP 28-pin SOIC 28-pin SSOP 28-pin QFN	40-pin PDIP 44-pin PLCC 44-pin TQFP 44-pin QFN	28-pin PDIP 28-pin SOIC 28-pin SSOP 28-pin QFN	40-pin PDIP 44-pin PLCC 44-pin TQFP 44-pin QFN

© 2001-2013 Microchip Technology Inc.

APPENDIX C: CONVERSION CONSIDERATIONS

Considerations for converting from previous versions of devices to the ones listed in this data sheet are listed in Table C-1.

TABLE C-1: CONVERSION CONSIDERATIONS

Characteristic	PIC16C7X	PIC16F87X	PIC16F87XA
Pins	28/40	28/40	28/40
Timers	3	3	3
Interrupts	11 or 12	13 or 14	14 or 15
Communication	PSP, USART, SSP (SPI, I^2C Slave)	PSP, USART, SSP (SPI, I^2C Master/Slave)	PSP, USART, SSP (SPI, I^2C Master/Slave)
Frequency	20 MHz	20 MHz	20 MHz
Voltage	2.5V-5.5V	2.2V-5.5V	2.0V-5.5V
A/D	8-bit, 4 conversion clock selects	10-bit, 4 conversion clock selects	10-bit, 7 conversion clock selects
CCP	2	2	2
Comparator	—	—	2
Comparator Voltage Reference	—	—	Yes
Program Memory	4K, 8K EPROM	4K, 8K Flash (Erase/Write on single-word)	4K, 8K Flash (Erase/Write on four-word blocks)
RAM	192, 368 bytes	192, 368 bytes	192, 368 bytes
EEPROM Data	None	128, 256 bytes	128, 256 bytes
Code Protection	On/Off	Segmented, starting at end of program memory	On/Off
Program Memory Write Protection	—	On/Off	Segmented, starting at beginning of program memory
Other	—	In-Circuit Debugger, Low-Voltage Programming	In-Circuit Debugger, Low-Voltage Programming

© 2001-2013 Microchip Technology Inc.

INDEX

A

A/D 127
Acquisition Requirements 130
ADCON0 Register 127
ADCON1 Register 127
ADIF Bit 129
ADRESH Register 127
ADRESL Register 127
Analog Port Pins 49, 51
Associated Registers and Bits 133
Calculating Acquisition Time 130
Configuring Analog Port Pins 131
Configuring the Interrupt 129
Configuring the Module 129
Conversion Clock 131
Conversions 132
Converter Characteristics 194
Effects of a Reset 133
GO/DONE Bit 129
Internal Sampling Switch (Rss) Impedance 130
Operation During Sleep 133
Result Registers 132
Source Impedance 130
A/D Conversion Requirements 195
Absolute Maximum Ratings 173
ACKSTAT 101
ADCON0 Register 19
ADCON1 Register 20
Addressable Universal Synchronous Asynchronous Receiver Transmitter. *See* USART.
ADRESH Register 19
ADRESL Register 20
Analog-to-Digital Converter. *See* A/D.
Application Notes
AN552 (Implementing Wake-up on Key Stroke) 44
AN556 (Implementing a Table Read) 30
Assembler
MPASM Assembler 167
Asynchronous Reception
Associated Registers 118, 120
Asynchronous Transmission
Associated Registers 116

B

Banking, Data Memory 16, 22
Baud Rate Generator 97
Associated Registers 113
BCLIF 28
BF 101
Block Diagrams
A/D 129
Analog Input Model 130, 139
Baud Rate Generator 97
Capture Mode Operation 65
Comparator I/O Operating Modes 136
Comparator Output 138
Comparator Voltage Reference 142
Compare Mode Operation 66
Crystal/Ceramic Resonator Operation (HS, XT or LP Osc Configuration) 145
External Clock Input Operation (HS, XT or LP Osc Configuration) 145
Interrupt Logic 153
MSSP (I^2C Mode) 80
MSSP (SPI Mode) 71
On-Chip Reset Circuit 147
PIC16F873A/PIC16F876A Architecture 6
PIC16F874A/PIC16F877A Architecture 7
PORTC
Peripheral Output Override (RC2:0, RC7:5) Pins 46
Peripheral Output Override (RC4:3) Pins 46
PORTD (in I/O Port Mode) 48
PORTD and PORTE (Parallel Slave Port) 51
PORTE (In I/O Port Mode) 49
RA3:RA0 Pins 41
RA4/T0CKI Pin 42
RA5 Pin 42
RB3:RB0 Pins 44
RB7:RB4 Pins 44
RC Oscillator Mode 146
Recommended MCLR Circuit 148
Simplified PWM Mode 67
Timer0/WDT Prescaler 53
Timer1 58
Timer2 61
USART Receive 117, 119
USART Transmit 115
Watchdog Timer 155
BOR. *See* Brown-out Reset.
BRG. *See* Baud Rate Generator.
BRGH Bit 113
Brown-out Reset (BOR) 143, 147, 148, 149, 150
BOR Status (BOR Bit) 29
Bus Collision During a Repeated Start Condition 108
Bus Collision During a Start Condition 106
Bus Collision During a Stop Condition 109
Bus Collision Interrupt Flag bit, BCLIF 28

C

C Compilers
MPLAB C17 168
MPLAB C18 168
MPLAB C30 168
Capture/Compare/PWM (CCP) 63
Associated Registers
Capture, Compare and Timer1 68
PWM and Timer2 69
Capture Mode 65
CCP1IF 65
Prescaler 65
CCP Timer Resources 63
Compare
Special Event Trigger Output of CCP1 66
Special Event Trigger Output of CCP2 66
Compare Mode 66
Software Interrupt Mode 66
Special Event Trigger 66
Interaction of Two CCP Modules (table) 63
PWM Mode 67
Duty Cycle 67
Example Frequencies/Resolutions (table) 68
PWM Period 67
Special Event Trigger and A/D Conversions 66

Capture/Compare/PWM Requirements
(CCP1 and CCP2) 186
CCP. *See* Capture/Compare/PWM.
CCP1CON Register 19
CCP2CON Register 19
CCPR1H Register 19, 63
CCPR1L Register 19, 63
CCPR2H Register 19, 63
CCPR2L Register 19, 63
CCPxM0 Bit 64
CCPxM1 Bit 64
CCPxM2 Bit 64
CCPxM3 Bit 64
CCPxX Bit 64
CCPxY Bit 64
CLKO and I/O Timing Requirements 183
CMCON Register 20
Code Examples
Call of a Subroutine in Page 1 from Page 0 30
Indirect Addressing 31
Initializing PORTA 41
Loading the SSPBUF (SSPSR) Register 74
Reading Data EEPROM 35
Reading Flash Program Memory 36
Saving Status, W and PCLATH Registers
in RAM 154
Writing to Data EEPROM 35
Writing to Flash Program Memory 38
Code Protection 143, 157
Comparator Module 135
Analog Input Connection
Considerations 139
Associated Registers 140
Configuration 136
Effects of a Reset 139
Interrupts 138
Operation 137
Operation During Sleep 139
Outputs 137
Reference 137
Response Time 137
Comparator Specifications 180
Comparator Voltage Reference 141
Associated Registers 142
Computed GOTO 30
Configuration Bits 143
Configuration Word 144
Conversion Considerations 220
CVRCON Register 20

D

Data EEPROM and Flash Program Memory
EEADR Register 33
EEADRH Register 33
EECON1 Register 33
EECON2 Register 33
EEDATA Register 33
EEDATH Register 33
Data EEPROM Memory
Associated Registers 39
EEADR Register 33
EEADRH Register 33
EECON1 Register 33
EECON2 Register 33
Operation During Code-Protect 39
Protection Against Spurious Writes 39
Reading 35
Write Complete Flag Bit (EEIF) 33
Writing 35
Data Memory 16
Bank Select (RP1:RP0 Bits) 16, 22
General Purpose Registers 16
Register File Map 17, 18
Special Function Registers 19
DC and AC Characteristics Graphs and Tables 197
DC Characteristics 175–179
Demonstration Boards
PICDEM 1 170
PICDEM 17 170
PICDEM 18R PIC18C601/801 171
PICDEM 2 Plus 170
PICDEM 3 PIC16C92X 170
PICDEM 4 170
PICDEM LIN PIC16C43X 171
PICDEM USB PIC16C7X5 171
PICDEM.net Internet/Ethernet 170
Development Support 167
Device Differences 219
Device Overview 5
Direct Addressing 31

E

EEADR Register 21, 33
EEADRH Register 21, 33
EECON1 Register 21, 33
EECON2 Register 21, 33
EEDATA Register 21
EEDATH Register 21
Electrical Characteristics 173
Errata 4
Evaluation and Programming Tools 171
External Clock Timing Requirements 182
External Interrupt Input (RB0/INT). *See* Interrupt Sources.
External Reference Signal 137

F

Firmware Instructions 159
Flash Program Memory
Associated Registers 39
EECON1 Register 33
EECON2 Register 33
Reading 36
Writing 37
FSR Register 19, 20, 31

G

General Call Address Support 94

© 2001-2013 Microchip Technology Inc.

I

I/O Ports 41
I2C Bus Data Requirements 192
I^{2}C Bus Start/Stop Bits Requirements 191
I^{2}C Mode
    Registers 80
I^{2}C Mode 80
    $\overline{\text{ACK}}$ Pulse 84, 85
    Acknowledge Sequence Timing 104
    Baud Rate Generator 97
    Bus Collision
        Repeated Start Condition 108
        Start Condition 106
        Stop Condition 109
    Clock Arbitration 98
    Effect of a Reset 105
    General Call Address Support 94
    Master Mode 95
        Operation 96
        Repeated Start Timing 100
    Master Mode Reception 101
    Master Mode Start Condition 99
    Master Mode Transmission 101
    Multi-Master Communication, Bus Collision
        and Arbitration 105
    Multi-Master Mode 105
    Read/Write Bit Information (R/$\overline{\text{W}}$ Bit) 84, 85
    Serial Clock (RC3/SCK/SCL) 85
    Slave Mode 84
        Addressing 84
        Reception 85
        Transmission 85
    Sleep Operation 105
    Stop Condition Timing 104
ID Locations 143, 157
In-Circuit Debugger 143, 157
    Resources 157
In-Circuit Serial Programming (ICSP) 143, 158
INDF Register 19, 20, 31
Indirect Addressing 31
    FSR Register 16
Instruction Format 159
Instruction Set 159
    ADDLW 161
    ADDWF 161
    ANDLW 161
    ANDWF 161
    BCF 161
    BSF 161
    BTFSC 161
    BTFSS 161
    CALL 162
    CLRF 162
    CLRW 162
    CLRWDT 162
    COMF 162
    DECF 162
    DECFSZ 163
    GOTO 163
    INCF 163
    INCFSZ 163
    IORLW 163
    IORWF 163
    RETURN 164
    RLF 164
    RRF 164
    SLEEP 164
    SUBLW 164
    SUBWF 164
    SWAPF 165
    XORLW 165
    XORWF 165
    Summary Table 160
INT Interrupt (RB0/INT). *See* Interrupt Sources.
INTCON Register 24
    GIE Bit 24
    INTE Bit 24
    INTF Bit 24
    PEIE Bit 24
    RBIE Bit 24
    RBIF Bit 24, 44
    TMR0IE Bit 24
    TMR0IF Bit 24
Inter-Integrated Circuit. *See* I^{2}C.
Internal Reference Signal 137
Internal Sampling Switch (Rss) Impedance 130
Interrupt Sources 143, 153
    Interrupt-on-Change (RB7:RB4) 44
    RB0/INT Pin, External 9, 11, 154
    TMR0 Overflow 154
    USART Receive/Transmit Complete 111
Interrupts
    Bus Collision Interrupt 28
    Synchronous Serial Port Interrupt 26
Interrupts, Context Saving During 154
Interrupts, Enable Bits
    Global Interrupt Enable (GIE Bit) 24, 153
    Interrupt-on-Change (RB7:RB4)
        Enable (RBIE Bit) 24, 154
    Peripheral Interrupt Enable (PEIE Bit) 24
    RB0/INT Enable (INTE Bit) 24
    TMR0 Overflow Enable (TMR0IE Bit) 24
Interrupts, Flag Bits
    Interrupt-on-Change (RB7:RB4) Flag
        (RBIF Bit) 24, 44, 154
    RB0/INT Flag (INTF Bit) 24
    TMR0 Overflow Flag (TMR0IF Bit) 24, 154

L

Loading of PC 30
Low-Voltage ICSP Programming 158
Low-Voltage In-Circuit Serial Programming 143

M

Master Clear ($\overline{\text{MCLR}}$) 8
    $\overline{\text{MCLR}}$ Reset, Normal Operation 147, 149, 150
    $\overline{\text{MCLR}}$ Reset, Sleep 147, 149, 150
Master Synchronous Serial Port (MSSP). *See* MSSP.
$\overline{\text{MCLR}}$ 148
$\overline{\text{MCLR}}$/VPP 10
Memory Organization 15
    Data EEPROM Memory 33
    Data Memory 16
    Flash Program Memory 33
    Program Memory 15
MPLAB ASM30 Assembler, Linker, Librarian 168
MPLAB ICD 2 In-Circuit Debugger 169
MPLAB ICE 2000 High-Performance Universal
    In-Circuit Emulator 169

MPLAB ICE 4000 High-Performance Universal
In-Circuit Emulator 169
MPLAB Integrated Development
Environment Software 167
MPLINK Object Linker/MPLIB Object Librarian 168
MSSP 71
I²C Mode. *See* I²C.
SPI Mode 71
SPI Mode. *See* SPI.
MSSP Module
Clock Stretching 90
Clock Synchronization and the CKP Bit 91
Control Registers (General) 71
Operation 84
Overview 71
SPI Master Mode 76
SPI Slave Mode 77
SSPBUF 76
SSPSR 76
Multi-Master Mode 105

O

Opcode Field Descriptions 159
OPTION_REG Register 23
INTEDG Bit 23
PS2:PS0 Bits 23
PSA Bit 23
RBPU Bit 23
T0CS Bit 23
T0SE Bit 23
OSC1/CLKI Pin 8, 10
OSC2/CLKO Pin 8, 10
Oscillator Configuration
HS 145, 149
LP 145, 149
RC 145, 146, 149
XT 145, 149
Oscillator Selection 143
Oscillator Start-up Timer (OST) 143, 148
Oscillator, WDT 155
Oscillators
Capacitor Selection 146
Ceramic Resonator Selection 145
Crystal and Ceramic Resonators 145
RC 146

P

Package Information
Marking 209
Packaging Information 209
Paging, Program Memory 30
Parallel Slave Port (PSP) 13, 48, 51
Associated Registers 52
RE0/RD/AN5 Pin 49, 51
RE1/WR/AN6 Pin 49, 51
RE2/CS/AN7 Pin 49, 51
Select (PSPMODE Bit) 48, 49, 50, 51
Parallel Slave Port Requirements
(PIC16F874A/ 877A Only) 187
PCL Register 19, 20, 30
PCLATH Register 19, 20, 30
PCON Register 20, 29, 149
BOR Bit 29
POR Bit 29
PIC16F87XA Product Identification System 231
PICkit 1 Flash Starter Kit 171
PICSTART Plus Development Programmer 169
PIE1 Register 20, 25
PIE2 Register 20, 27
Pinout Descriptions
PIC16F873A/PIC16F876A 8
PIR1 Register 19, 26
PIR2 Register 19, 28
POP 30
POR. *See* Power-on Reset.
PORTA 8, 10
Associated Registers 43
Functions 43
PORTA Register 19, 41
TRISA Register 41
PORTB 9, 11
Associated Registers 45
Functions 45
PORTB Register 19, 44
Pull-up Enable (RBPU Bit) 23
RB0/INT Edge Select (INTEDG Bit) 23
RB0/INT Pin, External 9, 11, 154
RB7:RB4 Interrupt-on-Change 154
RB7:RB4 Interrupt-on-Change Enable
(RBIE Bit) 24, 154
RB7:RB4 Interrupt-on-Change Flag
(RBIF Bit) 24, 44, 154
TRISB Register 21, 44
PORTB Register 21
PORTC 9, 12
Associated Registers 47
Functions 47
PORTC Register 19, 46
RC3/SCK/SCL Pin 85
RC6/TX/CK Pin 112
RC7/RX/DT Pin 112, 113
TRISC Register 46, 111
PORTD 13, 51
Associated Registers 48
Functions 48
Parallel Slave Port (PSP) Function 48
PORTD Register 19, 48
TRISD Register 48
PORTE 13
Analog Port Pins 49, 51
Associated Registers 50
Functions 49
Input Buffer Full Status (IBF Bit) 50
Input Buffer Overflow (IBOV Bit) 50
Output Buffer Full Status (OBF Bit) 50
PORTE Register 19, 49
PSP Mode Select (PSPMODE Bit) 48, 49, 50, 51
RE0/RD/AN5 Pin 49, 51
RE1/WR/AN6 Pin 49, 51
RE2/CS/AN7 Pin 49, 51
TRISE Register 49
Postscaler, WDT
Assignment (PSA Bit) 23
Rate Select (PS2:PS0 Bits) 23
Power-down Mode. *See* Sleep.
Power-on Reset (POR) 143, 147, 148, 149, 150
POR Status (POR Bit) 29
Power Control (PCON) Register 149
Power-down (PD Bit) 22, 147
Power-up Timer (PWRT) 143
Time-out (TO Bit) 22, 147

© 2001-2013 Microchip Technology Inc.

Power-up Timer (PWRT) 148
PR2 Register 20, 61
Prescaler, Timer0
    Assignment (PSA Bit) 23
    Rate Select (PS2:PS0 Bits) 23
PRO MATE II Universal Device Programmer 169
Program Counter
    Reset Conditions 149
Program Memory 15
    Interrupt Vector 15
    Paging 30
    Program Memory Map and Stack
        (PIC16F873A/874A) 15
    Program Memory Map and Stack
        (PIC16F876A/877A) 15
    Reset Vector 15
Program Verification 157
Programming Pin (VPP) 8
Programming, Device Instructions 159
PSP. *See* Parallel Slave Port.
Pulse Width Modulation. *See* Capture/Compare/PWM,
    PWM Mode.
PUSH 30

R

RA0/AN0 Pin 8, 10
RA1/AN1 Pin 8, 10
RA2/AN2/VREF-/CVREF Pin 8, 10
RA3/AN3/VREF+ Pin 8, 10
RA4/T0CKI/C1OUT Pin 8, 10
RA5/AN4/$\overline{SS}$/C2OUT Pin 8, 10
RAM. *See* Data Memory.
RB0/INT Pin 9, 11
RB1 Pin 9, 11
RB2 Pin 9, 11
RB3/PGM Pin 9, 11
RB4 Pin 9, 11
RB5 Pin 9, 11
RB6/PGC Pin 9, 11
RB7/PGD Pin 9, 11
RC0/T1OSO/T1CKI Pin 9, 12
RC1/T1OSI/CCP2 Pin 9, 12
RC2/CCP1 Pin 9, 12
RC3/SCK/SCL Pin 9, 12
RC4/SDI/SDA Pin 9, 12
RC5/SDO Pin 9, 12
RC6/TX/CK Pin 9, 12
RC7/RX/DT Pin 9, 12
RCREG Register 19
RCSTA Register 19
    ADDEN Bit 112
    CREN Bit 112
    FERR Bit 112
    OERR Bit 112
    RX9 Bit 112
    RX9D Bit 112
    SPEN Bit 111, 112
    SREN Bit 112
RD0/PSP0 Pin 13
RD1/PSP1 Pin 13
RD2/PSP2 Pin 13
RD3/PSP3 Pin 13
RD4/PSP4 Pin 13
RD5/PSP5 Pin 13
RD6/PSP6 Pin 13
RD7/PSP7 Pin 13
RE0/$\overline{RD}$/AN5 Pin 13
RE1/$\overline{WR}$/AN6 Pin 13
RE2/$\overline{CS}$/AN7 Pin 13
Read-Modify-Write Operations 159
Register File 16
Register File Map (PIC16F873A/874A) 18
Register File Map (PIC16F876A/877A) 17
Registers
    ADCON0 (A/D Control 0) 127
    ADCON1 (A/D Control 1) 128
    CCP1CON/CCP2CON (CCP Control 1
        and CCP Control 2) 64
    CMCON (Comparator Control) 135
    CVRCON (Comparator Voltage
        Reference Control) 141
    EECON1 (EEPROM Control 1) 34
    FSR 31
    INTCON 24
    OPTION_REG 23, 54
    PCON (Power Control) 29
    PIE1 (Peripheral Interrupt Enable 1) 25
    PIE2 (Peripheral Interrupt Enable 2) 27
    PIR1 (Peripheral Interrupt Request 1) 26
    PIR2 (Peripheral Interrupt Request 2) 28
    RCSTA (Receive Status and Control) 112
    Special Function, Summary 19
    SSPCON (MSSP Control 1, I^{2}C Mode) 82
    SSPCON (MSSP Control 1, SPI Mode) 73
    SSPCON2 (MSSP Control 2, I^{2}C Mode) 83
    SSPSTAT (MSSP Status, I^{2}C Mode) 81
    SSPSTAT (MSSP Status, SPI Mode) 72
    Status 22
    T1CON (Timer1 Control) 57
    T2CON (Timer2 Control) 61
    TRISE Register 50
    TXSTA (Transmit Status and Control) 111
Reset 143, 147
    Brown-out Reset (BOR). *See* Brown-out Reset (BOR).
    $\overline{MCLR}$ Reset. *See* $\overline{MCLR}$.
    Power-on Reset (POR). *See* Power-on Reset (POR).
    Reset Conditions for PCON Register 149
    Reset Conditions for Program Counter 149
    Reset Conditions for Status Register 149
    WDT Reset. *See* Watchdog Timer (WDT).
Reset, Watchdog Timer, Oscillator Start-up Timer,
    Power-up Timer and Brown-out Reset
    Requirements 184
Revision History 219

S

SCI. *See* USART.
SCK 71
SDI 71
SDO 71
Serial Clock, SCK 71
Serial Communication Interface. *See* USART.
Serial Data In, SDI 71
Serial Data Out, SDO 71
Serial Peripheral Interface. *See* SPI.
Slave Select Synchronization 77
Slave Select, $\overline{SS}$ 71
Sleep 143, 147, 156
Software Simulator (MPLAB SIM) 168
Software Simulator (MPLAB SIM30) 168
SPBRG Register 20
Special Features of the CPU 143

Special Function Registers 19
Special Function Registers (SFRs) 19
Speed, Operating 1
SPI Mode 71, 77
    Associated Registers 79
    Bus Mode Compatibility 79
    Effects of a Reset 79
    Enabling SPI I/O 75
    Master Mode 76
    Master/Slave Connection 75
    Serial Clock 71
    Serial Data In 71
    Serial Data Out 71
    Slave Select 71
    Slave Select Synchronization 77
    Sleep Operation 79
    SPI Clock 76
    Typical Connection 75
SPI Mode Requirements 190
SS 71
SSP
    SPI Master/Slave Connection 75
SSPADD Register 20
SSPBUF Register 19
SSPCON Register 19
SSPCON2 Register 20
SSPIF 26
SSPOV 101
SSPSTAT Register 20
    R/W Bit 84, 85
Stack 30
    Overflows 30
    Underflow 30
Status Register
    C Bit 22
    DC Bit 22
    IRP Bit 22
    PD Bit 22, 147
    RP1:RP0 Bits 22
    TO Bit 22, 147
    Z Bit 22
Synchronous Master Reception
    Associated Registers 123
Synchronous Master Transmission
    Associated Registers 122
Synchronous Serial Port Interrupt 26
Synchronous Slave Reception
    Associated Registers 125
Synchronous Slave Transmission
    Associated Registers 125

T

T1CKPS0 Bit 57
T1CKPS1 Bit 57
T1CON Register 19
T1OSCEN Bit 57
T1SYNC Bit 57
T2CKPS0 Bit 61
T2CKPS1 Bit 61
T2CON Register 19
TAD 131
Time-out Sequence 148
Timer0 53
    Associated Registers 55
    Clock Source Edge Select (T0SE Bit) 23
    Clock Source Select (T0CS Bit) 23
    External Clock 54
    Interrupt 53
    Overflow Enable (TMR0IE Bit) 24
    Overflow Flag (TMR0IF Bit) 24, 154
    Overflow Interrupt 154
    Prescaler 54
    T0CKI 54
Timer0 and Timer1 External Clock Requirements 185
Timer1 57
    Associated Registers 60
    Asynchronous Counter Mode 59
        Reading and Writing to 59
    Counter Operation 58
    Operation in Timer Mode 58
    Oscillator 59
        Capacitor Selection 59
    Prescaler 60
    Resetting of Timer1 Registers 60
    Resetting Timer1 Using a CCP Trigger Output 59
    Synchronized Counter Mode 58
    TMR1H 59
    TMR1L 59
Timer2 61
    Associated Registers 62
    Output 62
    Postscaler 61
    Prescaler 61
    Prescaler and Postscaler 62
Timing Diagrams
    A/D Conversion 195
    Acknowledge Sequence 104
    Asynchronous Master Transmission 116
    Asynchronous Master Transmission
        (Back to Back) 116
    Asynchronous Reception 118
    Asynchronous Reception with
        Address Byte First 120
    Asynchronous Reception with
        Address Detect 120
    Baud Rate Generator with Clock Arbitration 98
    BRG Reset Due to SDA Arbitration During
        Start Condition 107
    Brown-out Reset 184
    Bus Collision During a Repeated
        Start Condition (Case 1) 108
    Bus Collision During Repeated
        Start Condition (Case 2) 108
    Bus Collision During Start Condition
        (SCL = 0) 107
    Bus Collision During Start Condition
        (SDA Only) 106
    Bus Collision During Stop Condition
        (Case 1) 109
    Bus Collision During Stop Condition
        (Case 2) 109
    Bus Collision for Transmit and Acknowledge 105
    Capture/Compare/PWM (CCP1 and CCP2) 186
    CLKO and I/O 183
    Clock Synchronization 91
    External Clock 182
    First Start Bit 99

© 2001-2013 Microchip Technology Inc.

I²C Bus Data 191
I²C Bus Start/Stop Bits 190
I²C Master Mode (Reception, 7-bit Address) 103
I²C Master Mode (Transmission, 7 or 10-bit Address) 102
I²C Slave Mode (Transmission, 10-bit Address) 89
I²C Slave Mode (Transmission, 7-bit Address) 87
I²C Slave Mode with SEN = 1 (Reception, 10-bit Address) 93
I²C Slave Mode with SEN = 0 (Reception, 10-bit Address) 88
I²C Slave Mode with SEN = 0 (Reception, 7-bit Address) 86
I²C Slave Mode with SEN = 1 (Reception, 7-bit Address) 92
Parallel Slave Port (PIC16F874A/877A Only) 187
Parallel Slave Port (PSP) Read 52
Parallel Slave Port (PSP) Write 52
Repeat Start Condition 100
Reset, Watchdog Timer, Start-up Timer and Power-up Timer 184
Slave Mode General Call Address Sequence (7 or 10-bit Address Mode) 94
Slave Synchronization 77
Slow Rise Time ($\overline{\text{MCLR}}$ Tied to VDD via RC Network) 152
SPI Master Mode (CKE = 0, SMP = 0) 188
SPI Master Mode (CKE = 1, SMP = 1) 188
SPI Mode (Master Mode) 76
SPI Mode (Slave Mode with CKE = 0) 78
SPI Mode (Slave Mode with CKE = 1) 78
SPI Slave Mode (CKE = 0) 189
SPI Slave Mode (CKE = 1) 189
Stop Condition Receive or Transmit Mode 104
Synchronous Reception (Master Mode, SREN) 124
Synchronous Transmission 122
Synchronous Transmission (Through TXEN) 122
Time-out Sequence on Power-up ($\overline{\text{MCLR}}$ Not Tied to VDD)
Case 1 152
Case 2 152
Time-out Sequence on Power-up ($\overline{\text{MCLR}}$ Tied to VDD via RC Network) 151
Timer0 and Timer1 External Clock 185
USART Synchronous Receive (Master/Slave) 193
USART Synchronous Transmission (Master/Slave) 193
Wake-up from Sleep via Interrupt 157
Timing Parameter Symbology 181
TMR0 Register 19
TMR1CS Bit 57
TMR1H Register 19
TMR1L Register 19
TMR1ON Bit 57
TMR2 Register 19
TMR2ON Bit 61
TMRO Register 21
TOUTPS0 Bit 61
TOUTPS1 Bit 61
TOUTPS2 Bit 61
TOUTPS3 Bit 61
TRISA Register 20
TRISB Register 20
TRISC Register 20
TRISD Register 20
TRISE Register 20
IBF Bit 50
IBOV Bit 50
OBF Bit 50
PSPMODE Bit 48, 49, 50, 51
TXREG Register 19
TXSTA Register 20
BRGH Bit 111
CSRC Bit 111
SYNC Bit 111
TRMT Bit 111
TX9 Bit 111
TX9D Bit 111
TXEN Bit 111

U

USART 111
Address Detect Enable (ADDEN Bit) 112
Asynchronous Mode 115
Asynchronous Receive (9-bit Mode) 119
Asynchronous Receive with Address Detect. *See* Asynchronous Receive (9-bit Mode).
Asynchronous Receiver 117
Asynchronous Reception 118
Asynchronous Transmitter 115
Baud Rate Generator (BRG) 113
Baud Rate Formula 113
Baud Rates, Asynchronous Mode (BRGH = 0) 114
Baud Rates, Asynchronous Mode (BRGH = 1) 114
High Baud Rate Select (BRGH Bit) 111
Sampling 113
Clock Source Select (CSRC Bit) 111
Continuous Receive Enable (CREN Bit) 112
Framing Error (FERR Bit) 112
Mode Select (SYNC Bit) 111
Overrun Error (OERR Bit) 112
Receive Data, 9th Bit (RX9D Bit) 112
Receive Enable, 9-bit (RX9 Bit) 112
Serial Port Enable (SPEN Bit) 111, 112
Single Receive Enable (SREN Bit) 112
Synchronous Master Mode 121
Synchronous Master Reception 123
Synchronous Master Transmission 121
Synchronous Slave Mode 124
Synchronous Slave Reception 125
Synchronous Slave Transmit 124
Transmit Data, 9th Bit (TX9D) 111
Transmit Enable (TXEN Bit) 111
Transmit Enable, 9-bit (TX9 Bit) 111
Transmit Shift Register Status (TRMT Bit) 111
USART Synchronous Receive Requirements 193

V

VDD Pin 9, 13
Voltage Reference Specifications 180
VSS Pin 9, 13

W

Wake-up from Sleep 143, 156
Interrupts 149, 150
$\overline{\text{MCLR}}$ Reset 150
WDT Reset 150
Wake-up Using Interrupts 156
Watchdog Timer
Register Summary 155
Watchdog Timer (WDT) 143, 155
Enable (WDTE Bit) 155
Postscaler. *See* Postscaler, WDT.
Programming Considerations 155
RC Oscillator 155
Time-out Period 155
WDT Reset, Normal Operation 147, 149, 150
WDT Reset, Sleep 147, 149, 150
WCOL 99, 101, 104
WCOL Status Flag 99
WWW, On-Line Support 4

© 2001-2013 Microchip Technology Inc.

THE MICROCHIP WEB SITE

Microchip provides online support via our WWW site at www.microchip.com. This web site is used as a means to make files and information easily available to customers. Accessible by using your favorite Internet browser, the web site contains the following information:

- **Product Support** – Data sheets and errata, application notes and sample programs, design resources, user's guides and hardware support documents, latest software releases and archived software
- **General Technical Support** – Frequently Asked Questions (FAQ), technical support requests, online discussion groups, Microchip consultant program member listing
- **Business of Microchip** – Product selector and ordering guides, latest Microchip press releases, listing of seminars and events, listings of Microchip sales offices, distributors and factory representatives

CUSTOMER CHANGE NOTIFICATION SERVICE

Microchip's customer notification service helps keep customers current on Microchip products. Subscribers will receive e-mail notification whenever there are changes, updates, revisions or errata related to a specified product family or development tool of interest.

To register, access the Microchip web site at www.microchip.com. Under "Support", click on "Customer Change Notification" and follow the registration instructions.

CUSTOMER SUPPORT

Users of Microchip products can receive assistance through several channels:

- Distributor or Representative
- Local Sales Office
- Field Application Engineer (FAE)
- Technical Support

Customers should contact their distributor, representative or field application engineer (FAE) for support. Local sales offices are also available to help customers. A listing of sales offices and locations is included in the back of this document.

Technical support is available through the web site at: http://microchip.com/support

READER RESPONSE

It is our intention to provide you with the best documentation possible to ensure successful use of your Microchip product. If you wish to provide your comments on organization, clarity, subject matter, and ways in which our documentation can better serve you, please FAX your comments to the Technical Publications Manager at (480) 792-4150.

Please list the following information, and use this outline to provide us with your comments about this document.

TO: Technical Publications Manager

Total Pages Sent _____

RE: Reader Response

From: Name _____

Company _____

Address _____

City / State / ZIP / Country _____

Telephone: (_____) _____ - _____ FAX: (_____) _____ - _____

Application (optional):

Would you like a reply? ___Y ___N

Device: PIC16F87XA Literature Number: DS39582C

Questions:

1. What are the best features of this document?

_____

_____

2. How does this document meet your hardware and software development needs?

_____

_____

3. Do you find the organization of this document easy to follow? If not, why?

_____

_____

4. What additions to the document do you think would enhance the structure and subject?

_____

_____

5. What deletions from the document could be made without affecting the overall usefulness?

_____

_____

6. Is there any incorrect or misleading information (what and where)?

_____

_____

7. How would you improve this document?

_____

_____

© 2001-2013 Microchip Technology Inc.

PIC16F87XA PRODUCT IDENTIFICATION SYSTEM

To order or obtain information, e.g., on pricing or delivery, refer to the factory or the listed sales office.

PART NO.	X	/XX	XXX
Device	Temperature Range	Package	Pattern

Device	PIC16F87XA(1), PIC16F87XAT(2); VDD range 4.0V to 5.5V PIC16LF87XA(1), PIC16LF87XAT(2); VDD range 2.0V to 5.5V		
Temperature Range	I	=	-40°C to +85°C (Industrial)
Package	ML	=	QFN (Metal Lead Frame)
	PT	=	TQFP (Thin Quad Flatpack)
	SO	=	SOIC
	SP	=	Skinny Plastic DIP
	P	=	PDIP
	L	=	PLCC
	S	=	SSOP

Examples:

a) PIC16F873A-I/P 301 = Industrial temp., PDIP package, normal VDD limits, QTP pattern #301.

b) PIC16LF876A-I/SO = Industrial temp., SOIC package, Extended VDD limits.

c) PIC16F877A-I/P = Industrial temp., PDIP package, 10 MHz, normal VDD limits.

Note 1: F = CMOS Flash
LF = Low-Power CMOS Flash
2: T = in tape and reel - SOIC, PLCC, TQFP packages only

NOTES:

Note the following details of the code protection feature on Microchip devices:

- Microchip products meet the specification contained in their particular Microchip Data Sheet.
- Microchip believes that its family of products is one of the most secure families of its kind on the market today, when used in the intended manner and under normal conditions.
- There are dishonest and possibly illegal methods used to breach the code protection feature. All of these methods, to our knowledge, require using the Microchip products in a manner outside the operating specifications contained in Microchip's Data Sheets. Most likely, the person doing so is engaged in theft of intellectual property.
- Microchip is willing to work with the customer who is concerned about the integrity of their code.
- Neither Microchip nor any other semiconductor manufacturer can guarantee the security of their code. Code protection does not mean that we are guaranteeing the product as "unbreakable."

Code protection is constantly evolving. We at Microchip are committed to continuously improving the code protection features of our products. Attempts to break Microchip's code protection feature may be a violation of the Digital Millennium Copyright Act. If such acts allow unauthorized access to your software or other copyrighted work, you may have a right to sue for relief under that Act.

Information contained in this publication regarding device applications and the like is provided only for your convenience and may be superseded by updates. It is your responsibility to ensure that your application meets with your specifications. MICROCHIP MAKES NO REPRESENTATIONS OR WARRANTIES OF ANY KIND WHETHER EXPRESS OR IMPLIED, WRITTEN OR ORAL, STATUTORY OR OTHERWISE, RELATED TO THE INFORMATION, INCLUDING BUT NOT LIMITED TO ITS CONDITION, QUALITY, PERFORMANCE, MERCHANTABILITY OR FITNESS FOR PURPOSE**.** Microchip disclaims all liability arising from this information and its use. Use of Microchip devices in life support and/or safety applications is entirely at the buyer's risk, and the buyer agrees to defend, indemnify and hold harmless Microchip from any and all damages, claims, suits, or expenses resulting from such use. No licenses are conveyed, implicitly or otherwise, under any Microchip intellectual property rights.

QUALITY MANAGEMENT SYSTEM
CERTIFIED BY DNV
═ ISO/TS 16949 ═

Trademarks

The Microchip name and logo, the Microchip logo, dsPIC, FlashFlex, KEELOQ, KEELOQ logo, MPLAB, PIC, PICmicro, PICSTART, PIC^{32} logo, rfPIC, SST, SST Logo, SuperFlash and UNI/O are registered trademarks of Microchip Technology Incorporated in the U.S.A. and other countries.

FilterLab, Hampshire, HI-TECH C, Linear Active Thermistor, MTP, SEEVAL and The Embedded Control Solutions Company are registered trademarks of Microchip Technology Incorporated in the U.S.A.

Silicon Storage Technology is a registered trademark of Microchip Technology Inc. in other countries.

Analog-for-the-Digital Age, Application Maestro, BodyCom, chipKIT, chipKIT logo, CodeGuard, dsPICDEM, dsPICDEM.net, dsPICworks, dsSPEAK, ECAN, ECONOMONITOR, FanSense, HI-TIDE, In-Circuit Serial Programming, ICSP, Mindi, MiWi, MPASM, MPF, MPLAB Certified logo, MPLIB, MPLINK, mTouch, Omniscient Code Generation, PICC, PICC-18, PICDEM, PICDEM.net, PICkit, PICtail, REAL ICE, rfLAB, Select Mode, SQI, Serial Quad I/O, Total Endurance, TSHARC, UniWinDriver, WiperLock, ZENA and Z-Scale are trademarks of Microchip Technology Incorporated in the U.S.A. and other countries.

SQTP is a service mark of Microchip Technology Incorporated in the U.S.A.

GestIC and ULPP are registered trademarks of Microchip Technology Germany II GmbH & Co. & KG, a subsidiary of Microchip Technology Inc., in other countries.

All other trademarks mentioned herein are property of their respective companies.

© 2001-2013, Microchip Technology Incorporated, Printed in the U.S.A., All Rights Reserved.

Printed on recycled paper.

ISBN: 9781620769621

Microchip received ISO/TS-16949:2009 certification for its worldwide headquarters, design and wafer fabrication facilities in Chandler and Tempe, Arizona; Gresham, Oregon and design centers in California and India. The Company's quality system processes and procedures are for its PIC® MCUs and dsPIC® DSCs, KEELOQ® code hopping devices, Serial EEPROMs, microperipherals, nonvolatile memory and analog products. In addition, Microchip's quality system for the design and manufacture of development systems is ISO 9001:2000 certified.

Worldwide Sales and Service

AMERICAS

Corporate Office
2355 West Chandler Blvd.
Chandler, AZ 85224-6199
Tel: 480-792-7200
Fax: 480-792-7277
Technical Support:
http://www.microchip.com/support
Web Address:
www.microchip.com

Atlanta
Duluth, GA
Tel: 678-957-9614
Fax: 678-957-1455

Boston
Westborough, MA
Tel: 774-760-0087
Fax: 774-760-0088

Chicago
Itasca, IL
Tel: 630-285-0071
Fax: 630-285-0075

Cleveland
Independence, OH
Tel: 216-447-0464
Fax: 216-447-0643

Dallas
Addison, TX
Tel: 972-818-7423
Fax: 972-818-2924

Detroit
Farmington Hills, MI
Tel: 248-538-2250
Fax: 248-538-2260

Indianapolis
Noblesville, IN
Tel: 317-773-8323
Fax: 317-773-5453

Los Angeles
Mission Viejo, CA
Tel: 949-462-9523
Fax: 949-462-9608

Santa Clara
Santa Clara, CA
Tel: 408-961-6444
Fax: 408-961-6445

Toronto
Mississauga, Ontario, Canada
Tel: 905-673-0699
Fax: 905-673-6509

ASIA/PACIFIC

Asia Pacific Office
Suites 3707-14, 37th Floor
Tower 6, The Gateway
Harbour City, Kowloon
Hong Kong
Tel: 852-2401-1200
Fax: 852-2401-3431

Australia - Sydney
Tel: 61-2-9868-6733
Fax: 61-2-9868-6755

China - Beijing
Tel: 86-10-8569-7000
Fax: 86-10-8528-2104

China - Chengdu
Tel: 86-28-8665-5511
Fax: 86-28-8665-7889

China - Chongqing
Tel: 86-23-8980-9588
Fax: 86-23-8980-9500

China - Hangzhou
Tel: 86-571-2819-3187
Fax: 86-571-2819-3189

China - Hong Kong SAR
Tel: 852-2943-5100
Fax: 852-2401-3431

China - Nanjing
Tel: 86-25-8473-2460
Fax: 86-25-8473-2470

China - Qingdao
Tel: 86-532-8502-7355
Fax: 86-532-8502-7205

China - Shanghai
Tel: 86-21-5407-5533
Fax: 86-21-5407-5066

China - Shenyang
Tel: 86-24-2334-2829
Fax: 86-24-2334-2393

China - Shenzhen
Tel: 86-755-8864-2200
Fax: 86-755-8203-1760

China - Wuhan
Tel: 86-27-5980-5300
Fax: 86-27-5980-5118

China - Xian
Tel: 86-29-8833-7252
Fax: 86-29-8833-7256

China - Xiamen
Tel: 86-592-2388138
Fax: 86-592-2388130

China - Zhuhai
Tel: 86-756-3210040
Fax: 86-756-3210049

ASIA/PACIFIC

India - Bangalore
Tel: 91-80-3090-4444
Fax: 91-80-3090-4123

India - New Delhi
Tel: 91-11-4160-8631
Fax: 91-11-4160-8632

India - Pune
Tel: 91-20-2566-1512
Fax: 91-20-2566-1513

Japan - Osaka
Tel: 81-6-6152-7160
Fax: 81-6-6152-9310

Japan - Tokyo
Tel: 81-3-6880- 3770
Fax: 81-3-6880-3771

Korea - Daegu
Tel: 82-53-744-4301
Fax: 82-53-744-4302

Korea - Seoul
Tel: 82-2-554-7200
Fax: 82-2-558-5932 or
82-2-558-5934

Malaysia - Kuala Lumpur
Tel: 60-3-6201-9857
Fax: 60-3-6201-9859

Malaysia - Penang
Tel: 60-4-227-8870
Fax: 60-4-227-4068

Philippines - Manila
Tel: 63-2-634-9065
Fax: 63-2-634-9069

Singapore
Tel: 65-6334-8870
Fax: 65-6334-8850

Taiwan - Hsin Chu
Tel: 886-3-5778-366
Fax: 886-3-5770-955

Taiwan - Kaohsiung
Tel: 886-7-213-7828
Fax: 886-7-330-9305

Taiwan - Taipei
Tel: 886-2-2508-8600
Fax: 886-2-2508-0102

Thailand - Bangkok
Tel: 66-2-694-1351
Fax: 66-2-694-1350

EUROPE

Austria - Wels
Tel: 43-7242-2244-39
Fax: 43-7242-2244-393

Denmark - Copenhagen
Tel: 45-4450-2828
Fax: 45-4485-2829

France - Paris
Tel: 33-1-69-53-63-20
Fax: 33-1-69-30-90-79

Germany - Munich
Tel: 49-89-627-144-0
Fax: 49-89-627-144-44

Italy - Milan
Tel: 39-0331-742611
Fax: 39-0331-466781

Netherlands - Drunen
Tel: 31-416-690399
Fax: 31-416-690340

Spain - Madrid
Tel: 34-91-708-08-90
Fax: 34-91-708-08-91

UK - Wokingham
Tel: 44-118-921-5869
Fax: 44-118-921-5820

11/29/12

© 2001-2013 Microchip Technology Inc.