PI6LC48P02

2-Output LVPECL Fibre Channel (FC) and Ethernet Clock Generator

Features

- Two differential LVPECL output pairs
- Selectable crystal oscillator interface or LVCMOS/LVTTL single-ended clock input
- Supports the following output frequencies:
  - Ethernet: 50MHz, 100MHz, 150MHz, 156.25MHz, 200MHz
  - Fibre Channel: 53.125MHz, 106.25MHz, 159.375MHz, 187.5MHz, 212.5MHz
- RMS phase jitter @ 212.5MHz, using a 26.5625MHz crystal (12kHz – 20MHz): 0.28ps (typical)
- RMS phase jitter @ 100MHz, using a 25MHz crystal (12kHz – 20MHz): 0.32ps (typical)
- RMS phase jitter @ 156.25MHz, using a 26.041667MHz crystal (12kHz – 20MHz): 0.30ps (typical)
- Full 3.3V or 2.5V supply modes
- Industrial operating temperature
- Available in lead-free package: 20-TSSOP

Description

The PI6LC48P02 is a 2-output LVPECL synthesizer optimized to generate Fibre Channel, Ethernet and storage reference clock frequencies and is a member of Pericom's HiFlex family of high performance clock solutions. Using a 26.5625MHz crystal, the most popular Fibre Channel (FC) frequencies can be generated based on the settings of 2 frequency select pins. Using 25MHz Xtal, most Ethenrnet frequencies inckuding 100MHz can be generated, while using 26.041667MHz Xtal, 156.25MHz can be generated for Networking applications.

The PI6LC48P02 uses Pericom's proprietary low phase noise PLL technology to achieve ultra low phase jitter, it is ideal for Networking, data center, and storage systems.

Applications

- Networking and Data Center Server systems
- Fibre Channel (FC) and Storage systems

Block Diagram

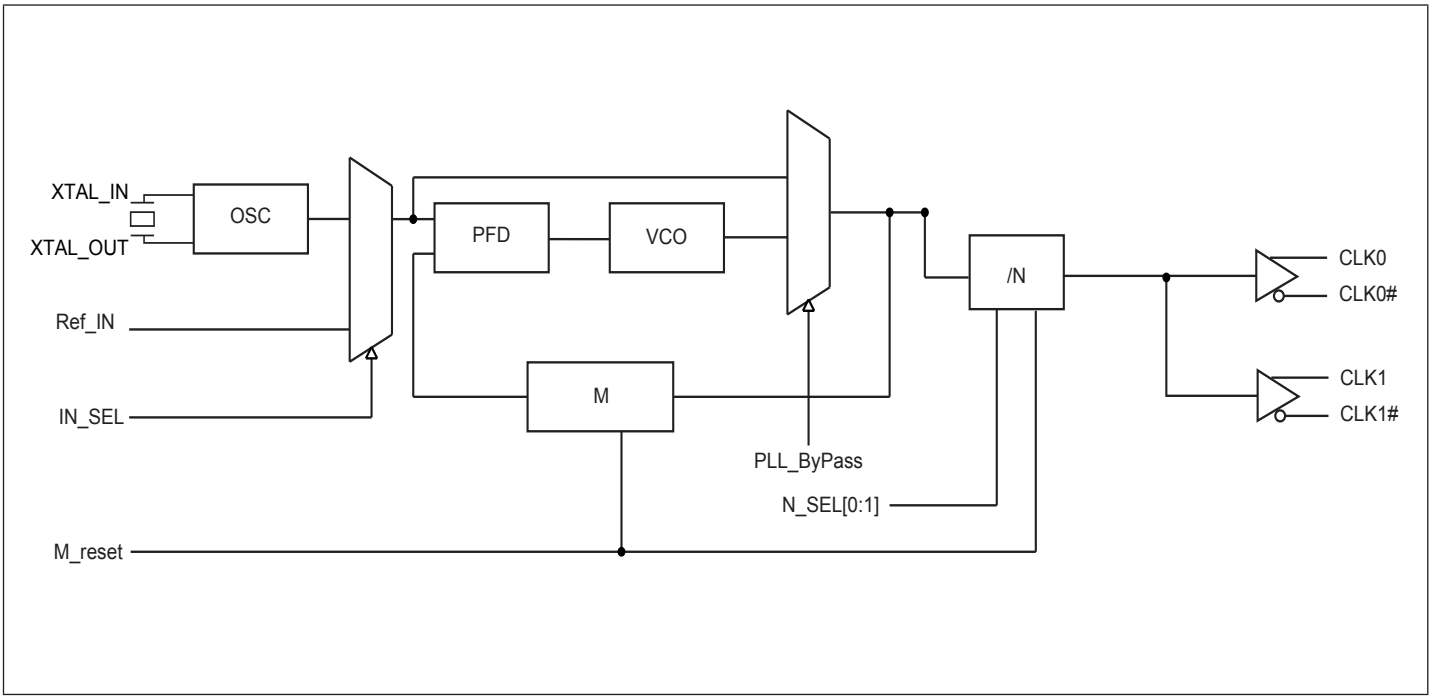

Pin Configuration

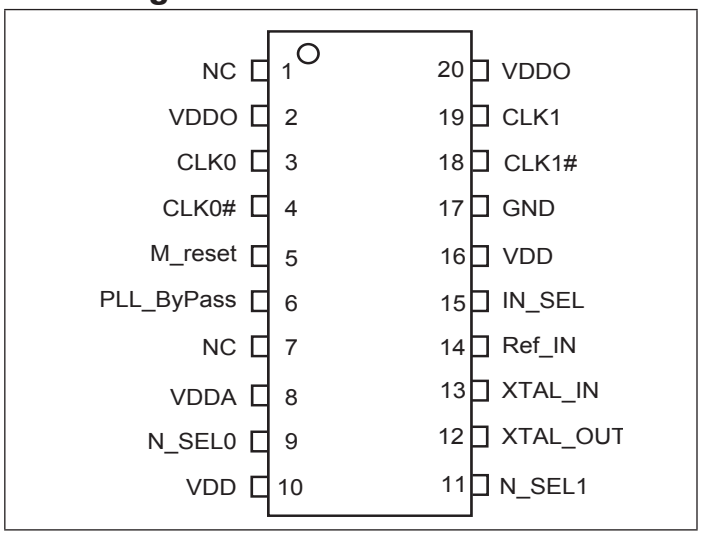

Pinout Table

Pin No.	Pin Name	I/O Type		Description
1, 7	NC			No connection
2, 20	VDDO	Power	-	Output Power Supply
3,4	CLK0, CLK0#	Output	-	LVPECL Output clock 0
5	M_reset	Input	Pull-down	Master reset. “1”, CLK0/CLK1 go to “low”, CLK0#/CLK1# go to “high”; “0” outputs are enabled
6	PLL_ByPass	Input	Pull-down	PLL bypass select. “0” PLL is enabled, “1” PLL is bypassed
8	VDDA	Power	-	Analog Power Supply
9, 11	N_SEL0, N_SEL1	Input	Pull-down	Output frequency select
10, 16	VDD	Power	-	Core Power Supply
12, 13	XOUT, XIN	Crystal	-	Crystal input and output
14	Ref_IN	Input	Pull-down	CMOS reference clock input
15	IN_SEL	Input	Pull-down	“0” selects Crystal, “1” selects reference input
17	GND	Ground	-	Ground
18, 19	CLK1#, CLK1	Output	-	LVPECL Output clock 1

Maximum Ratings (Over operating free-air temperature range)

Storage Temperature..... -65°C to+155°C
Ambient Temperature with Power Applied.....-40°C to+85°C
Supply Voltage .....-0.5 to +3.7V
ESD Protection (HBM) 2000V

Note:

Stresses greater than those listed under MAXIMUM RATINGS may cause permanent damage to the device. This is a stress rating only and functional operation of the device at these or any other conditions above those indicated in the operational sections of this specification is not implied. Exposure to absolute maximum rating conditions for extended periods may affect reliability.

DC Electrical Characteristics

Power Supply DC Characterisitcs, (T_A = -40°C to 85°C)

Symbol	Parameter	Condition	Min	Typ	Max	Units
V_{DD}, V_{DDA}, V_{DDO}	Supply Voltage		2.97	3.3	3.63	V
V_{DD}, V_{DDA}, V_{DDO}	Supply Voltage		2.375	2.5	2.625	V
I_{GND}	Power Supply Current				110	mA
I_{DDA}	Analog Supply Current				30	mA

LVCMOS/LVTTL DC Characterisitcs, (T_A = -40°C to 85°C)

Symbol	Parameter	Condition	Min	Typ	Max	Units
V_{IH}	Input High Voltage	V_{DD} = 3.3 V +/- 10%	2		V_{DD}+ 0.3	V
		V_{DD} = 2.5 V +/- 5%	1.7		V_{DD}+ 0.3	V
V_{IL}	Input Low Voltage	V_{DD} = 3.3 V +/- 10%	-0.3		0.8	V
		V_{DD} = 2.5 V +/- 5%	-0.3		0.7	V
I_{IH}	Input High Current	M_reset, PLL_ByPass, N_SEL[0:1], IN_SEL, Ref_IN V_{DD} = VIN = 3.63V			150	µA
I_{IL}	Input Low Current	M_reset, PLL_ByPass, N_SEL[0:1], IN_SEL, Ref_IN V_{DD} = 3.63V, V_{IN} = 0V	-5			µA

Pin Characterisitcs

Symbol	Parameter	Condition	Min	Typ	Max	Units
C_{IN}	Input Capacitance			4		pF
$R_{PULLDOWNN}$	Pull down resistor			51		kΩ

LVPECL DC Characterisitcs, (T_A = -40°C to 85°C)

Symbol	Parameter	Condition	Min	Typ	Max	Units
V_{OH}	Output High Voltage[1]	V_{DD} = 3.3V	1.9		2.4	V
		V_{DD} = 2.5V	1.1		1.6	
V_{OL}	Output Low Voltage[1]	V_{DD} = 3.3V	1.2		1.6	V
		V_{DD} = 2.5V	0.4		0.8	

Note: 1. LVPECL Termination: Source 150ohm to GND and 100ohm across CLK and CLK#.

AC Electrical Characteristics, (T_A = -40°C to 85°C)

LVPECL Termination: Source 150ohm to GND and using 0.01uF ac-coupled to 50ohm to GND

Symbol	Parameter	Condition	Min.	Typ.	Max	Units
f_{OUT}	Output Frequency	N_SEL[1:0] = 00	186.67		226.67	MHz
		N_SEL[1:0] = 01	140		170	MHz
		N_SEL[1:0] = 10	93.33		113	MHz
		N_SEL[1:0] = 11	46.67		56.67	MHz
$t_{sk(o)}$	Output Skew[1, 3]	Outputs at the same same loading		30		ps
$t_{jit(Ø)}$	RMS Phase Jitter, (Random)[2]	212.5MHz, (637kHz - 10MHz)		0.17		ps
		212.5MHz, (12kHz - 20MHz)		0.28		ps
		200MHz, (1.875MHz - 20MHz)		0.10		ps
		200MHz, (12kHz - 20MHz)		0.29		ps
		156.25MHz, (1.875MHz - 20MHz)		0.15		ps
		156.25MHz, (12kHz - 20MHz)		0.30		ps
		159.375MHz, (637kHz - 10MHz)		0.20		ps
		159.375MHz, (12kHz - 20MHz)		0.30		ps
		150MHz, (1.875MHz - 20MHz)		0.15		ps
		150MHz, (12kHz - 20MHz)		0.31		ps
		106.25MHz, (637kHz - 10MHz)		0.20		ps
		106.25MHz, (12kHz - 20MHz)		0.32		ps
		100MHz, (1.875MHz - 20MHz)		0.18		ps
		100MHz, (12kHz - 20MHz)		0.32		ps
		53.125MHz, (637kHz - 10MHz)		0.25		ps
		53.125MHz, (12kHz - 20MHz)		0.42		ps
		50MHz, (1.875MHz - 10MHz)		0.36		ps
		50MHz, (12kHz - 20MHz)		0.60		ps
		187.5MHz, (1.875MHz - 10MHz)		0.11		ps
		187.5MHz, (12kHz - 20MHz)		0.28		ps

AC Electrical Characteristics, (T_A = -40°C to 85°C) Cont.

LVPECL Termination: Source 150ohm to GND and using 0.01uF ac-coupled to 50ohm to GND

Symbol	Parameter	Condition	Min.	Typ.	Max	Units
t_R / t_F	Output Rise/Fall Time	20% to 80%			400	ps
o_{DC}	Output Duty Cycle		48		52	%

Note:
1. Defined as skew within a bank of outputs at the same supply voltage and with equal load conditions. Measured at the differential cross points.
2. Please refer to the Phase Noise Plots.
3. This parameter is defined in accordance with JEDEC Standard 65.

Phase Noise Plots

f_{OUT} = 212.5MHz

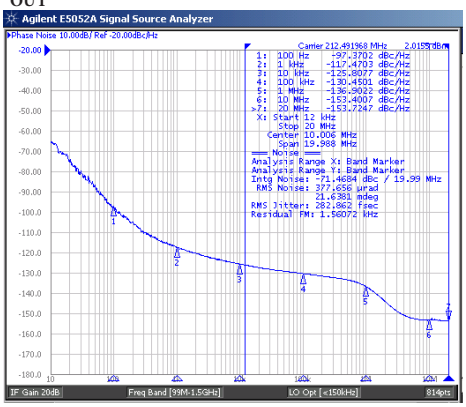

f_{OUT} = 187.5MHz

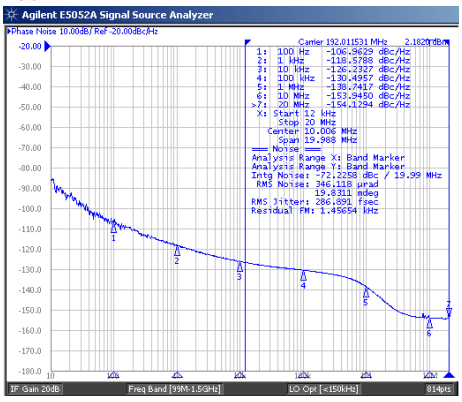

f_{OUT} = 159.375MHz

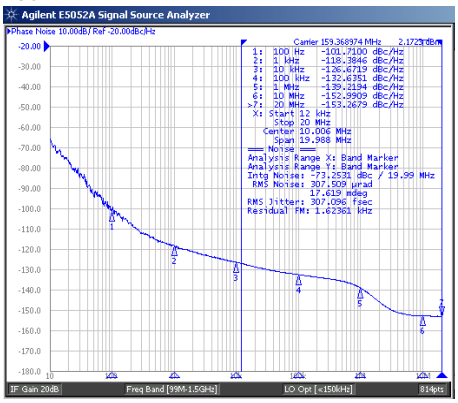

f_{OUT} = 156.25MHz

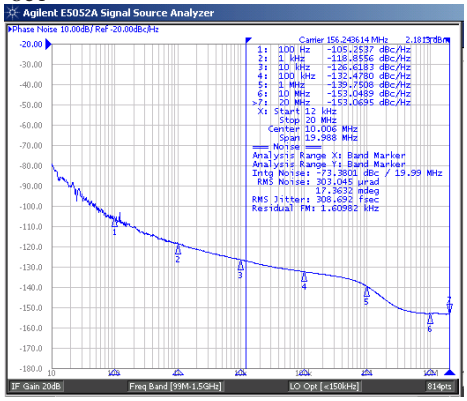

f_{OUT} = 106.25MHz

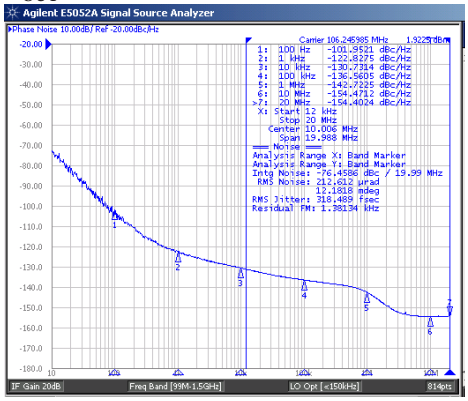

f_{OUT} = 53.125MHz

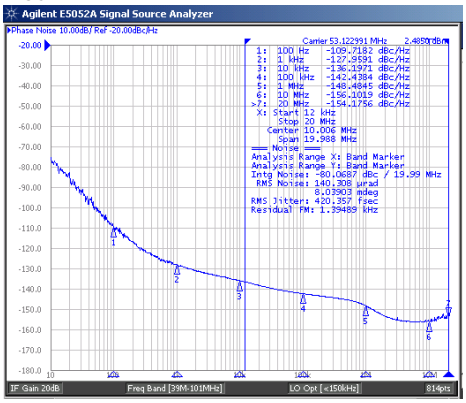

Phase Noise Plots

f_{OUT} = 200MHz

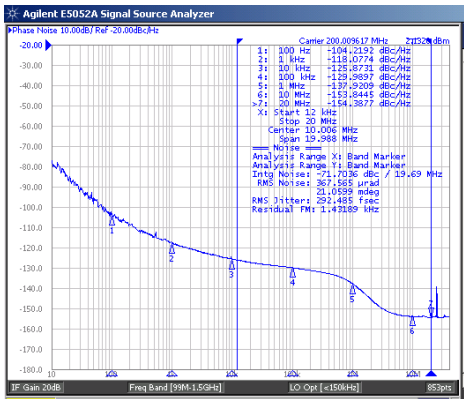

f_{OUT} = 150MHz

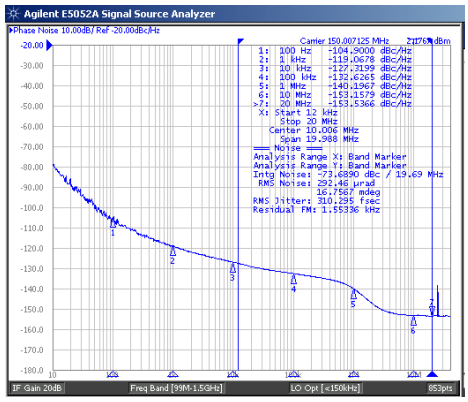

f_{OUT} = 100MHz

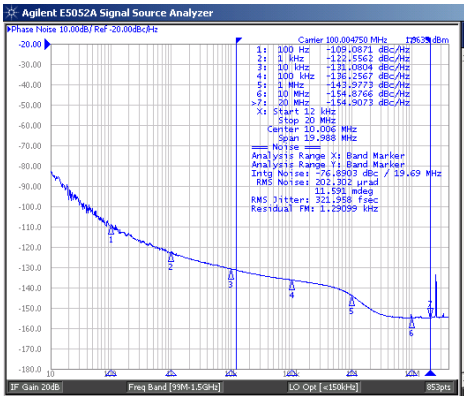

f_{OUT} = 50MHz

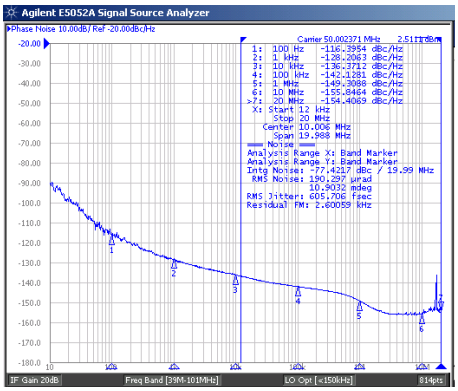

LVPECL Test Circuit

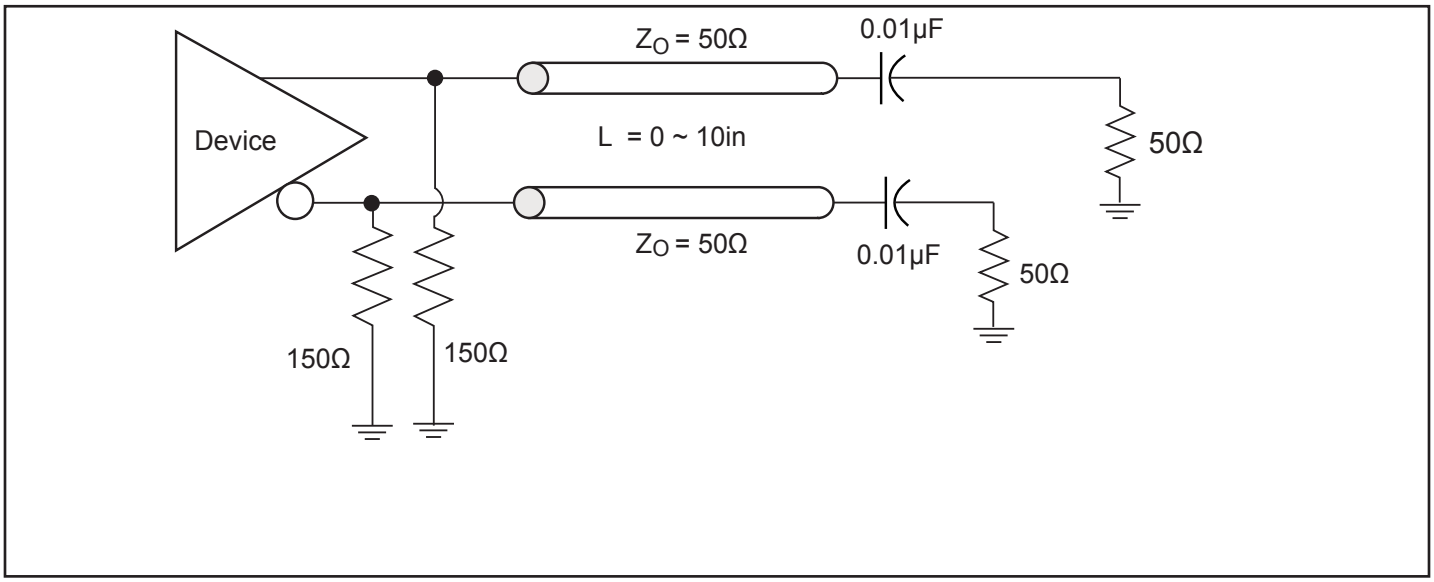

Power Supply Filtering Techniques

As in any high speed analog circuitry, the power supply pins are vulnerable to random noise. To achieve optimum jitter performance, power supply isolation is required. The PI6LC48P02 provides separate power supplies to isolate any high switching noise from the outputs to the internal PLL. V_{DD}, V_{DDA} and V_{DDO} should be individually connected to the power supply plane through vias, and 0.1µF bypass capacitors should be used for each pin. Figure below illustrates this for a generic V_{DD} pin and also shows that V_{DDA} requires that an additional 10Ω resistor along with a 10µF bypass capacitor be connected to the V_{DDA} pin.

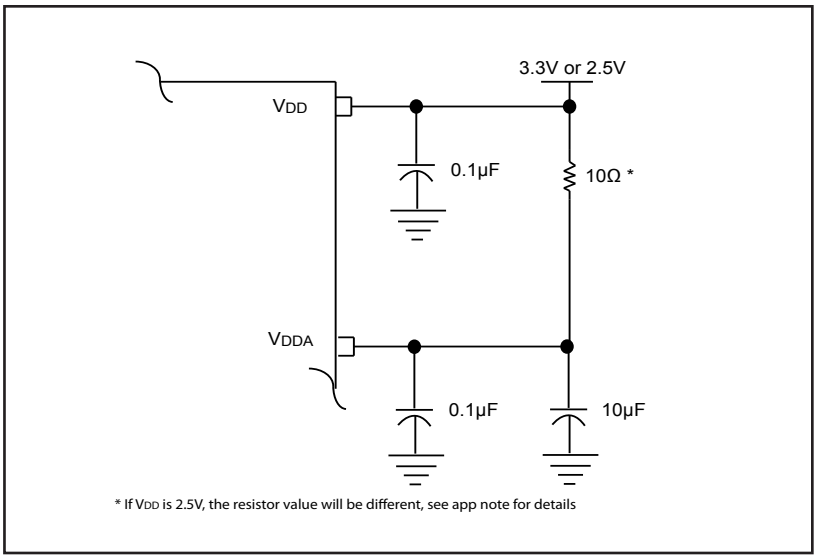

Recommendations for Unused Input and Output Pins

Inputs:

Crystal Inputs:

For applications not requiring the use of the crystal oscillator input, both XTAL_IN and XTAL_OUT can be left floating. A 1kΩ resistor can be tied from XTAL_IN to ground for additional protection.

Ref_IN Input:

For applications not requiring the use of the clock, it can be left floating. A 1kΩ resistor tied from the Ref_IN to ground can provide additional protection.

LVCMOS Control Pins:

All control pins have internal pulldowns; A 1kΩ resistor tied from each control pin to ground can provide additional protection.

Outputs:

LVPECL Outputs:

All unused LVPECL outputs can be left floating. We recommend that there is no trace attached. Both sides of the differential output pair should either be left floating or terminated.

Crystal Input Interface

The clock generator has been characterized with 18pF parallel resonant crystals. The capacitor values shown in the figure below were determined using a 26.5625MHz, 18pF parallel resonant crystal and were chosen to minimize the ppm error.

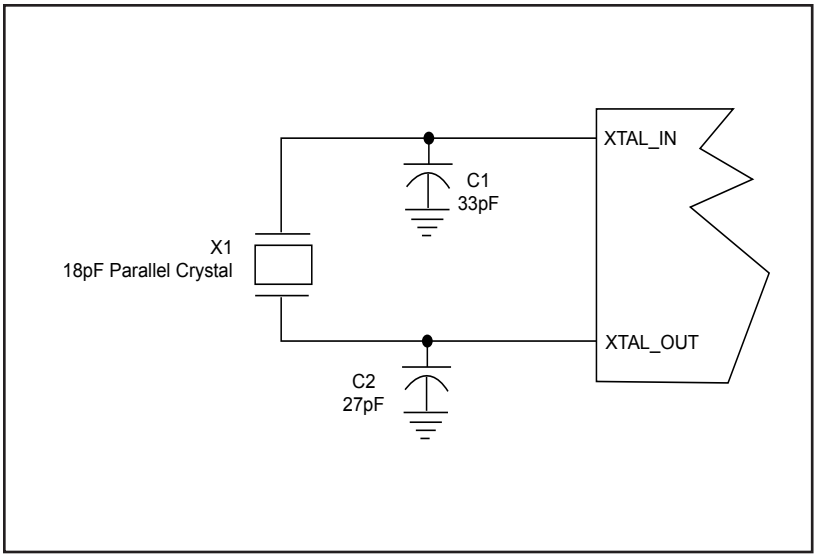

LVCMOS to XTAL Interface

The XTAL_IN input can accept a single-ended LVCMOS signal through an AC coupling capacitor. A general interface diagram is shown in the figure below. The XTAL_OUT pin can be left floating. The input edge rate can be as slow as 10ns. For LVCMOS signals, it is recommended that the amplitude be reduced from full swing to half swing in order to prevent signal interference with the power rail and to reduce noise. This configuration requires that the output impedance of the driver (Ro) plus the series resistance (Rs) equals the transmission line impedance. In addition, matched termination at the crystal input will attenuate the signal in half. This can be done in one of the two ways. First, R1 and R2 in parallel should equal the transmission line empedance. For most 50Ω applications, R1 and R2 can be 100Ω. This can also be accomplished by removing R1 and making R2 50Ω. By overdriving the crystal oscillator, the device will be functional, but note, the device performance is quaranteed by using a quartz crystal.

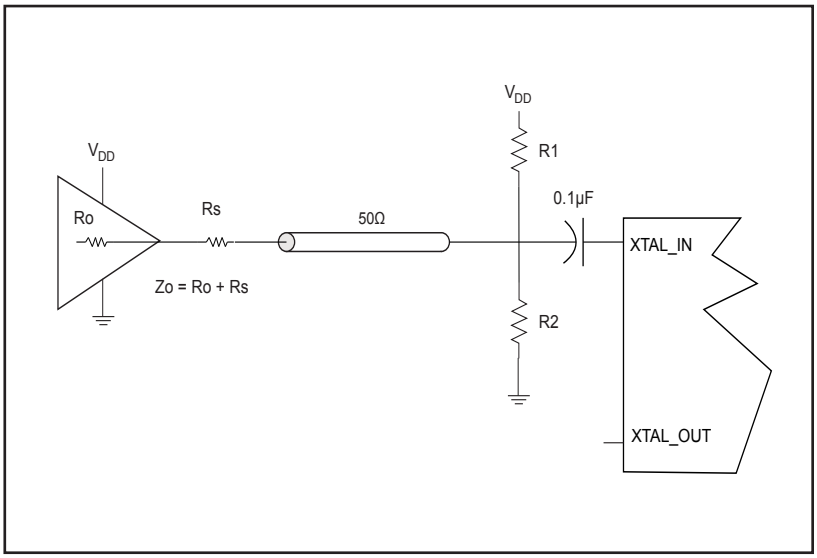

Thermal Information

Symbol	Description	
Θ_{JA}	Junction-to-ambient thermal resistance	84.0 ^{O}C/W
Θ_{JC}	Junction-to-case thermal resistance	17.0 ^{O}C/W

Packaging Mechanical: 20-Contact TSSOP (L)

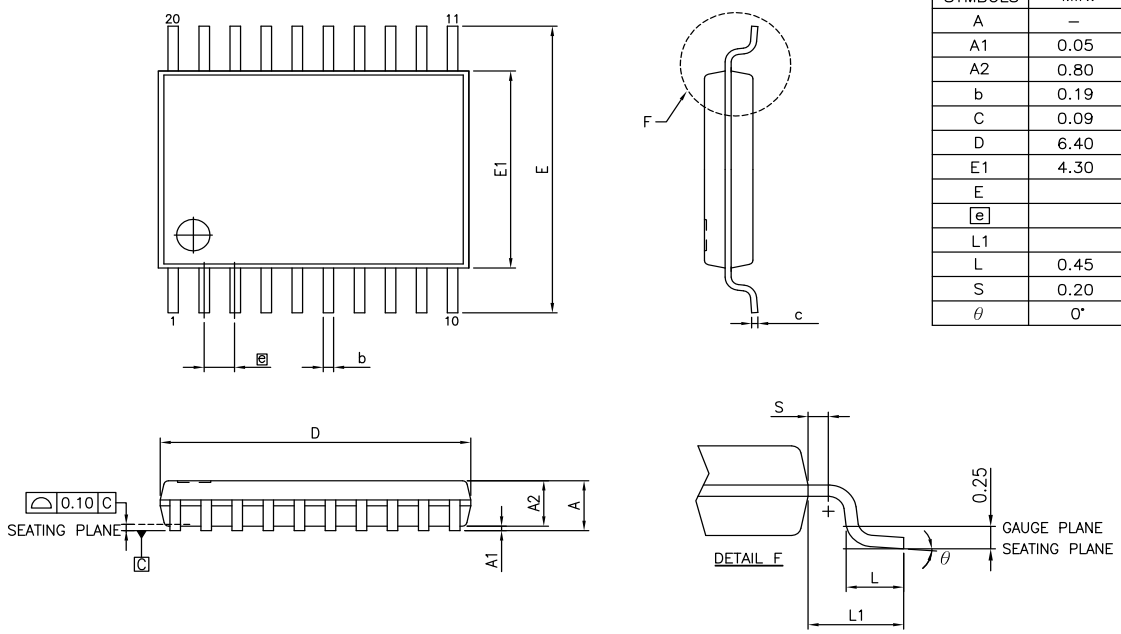

VARIATIONS (ALL DIMENSIONS SHOWN IN MM)

SYMBOLS	MIN.	NOM.	MAX.
A	–	–	1.20
A1	0.05	–	0.15
A2	0.80	–	1.05
b	0.19	–	0.30
C	0.09	–	0.20
D	6.40	6.50	6.60
E1	4.30	4.40	4.50
E	6.40 BSC		
e	0.65 BSC		
L1	1.00 REF		
L	0.45	0.60	0.75
S	0.20	–	–
θ	0°	–	8°

Notes:
1. Refer JEDEC MO-153F/AC
2. Controlling dimensions in millimeters
3. Package outline exclusive of mold flash and metal burr

PERICOM Enabling Serial Connectivity — DATE: 05/03/12

DESCRIPTION: 20-pin, 173mil Wide TSSOP

PACKAGE CODE: L

DOCUMENT CONTROL #: PD-1311 — REVISION: F

12-0373

Ordering Information

Ordering Code	Packaging Type	Package Description	Operating Temperature
PI6LC48P02LIE	L	Pb-free & Green, 20-pin TSSOP	Industrial
PI6LC48P02LIEX	L	Pb-free & Green, 20-pin TSSOP, Tape & Reel	Industrial

Notes:
- Thermal characteristics can be found on the company web site at www.pericom.com/packaging/
- "E" denotes Pb-free and Green
- Adding an "X" at the end of the ordering code denotes tape and reel packaging