NXP keyless entry/go solutions

Advancing keyless entry/go

Consumers like the convenience that keyless solutions bring, enabling vehicle entry with seamless unlock and push-to-start functions. Our dedicated keyless entry/go chipsets, which provide precise inside/outside detection, are the industry's top solutions.

ACTIC-Pro features

- Keyless entry/go ICs (PCF7952, PCF7953)
- Low-power, 8-bit microcontroller architecture and 125 kHz 3D-LF frontend

Benefits

- Ultra-low power consumption for long battery life
- Highly integrated for low bill of materials and minimum board space
- Easy design-in with high LF sensitivity and fast RSSI

Drawing on our world-class experience in car access and immobilizer solutions, we have developed low-power, highly integrated keyless entry/go solutions that have a well defined operating range. These dedicated keyless entry/go ICs incorporate a highly sensitive 3D LF front-end, a sophisticated wake-up processor, and an immobilizer and keyless entry microcontroller. The architecture features a hardware immobilizer security algorithm and supports the use of Receive Signal Strength Indication (RSSI) to locate the car key. The ACTIC-Pro family consisting of PCF7952 and PCF7953 is based on our field-proven, low-power 8-bit microcontroller architecture. Offering several additional features, the next-generation ACTIC-4G 1D/3D (NCF2952/NCF2951) evolves past its predecessors.

ACTIC-4G 1D/3D features

- Fourth-generation keyless entry/go IC (NCF2952/NCF2951)
- Increased sensitivity, 3 channel active LF interface for 125 kHz, 1 channel operation, plus passive LF for immobilizer backup mode
- Low-power 16-bit microcontroller core
- 3D security transponder in NCF2951
- C compiler for facilitated software development
- Memory:
  - 2 Kbyte EEPROM
  - 16 Kbyte EROM + 8 Kbyte ROM for customer application
  - 512 byte RAM
- Up to 21 I/O ports, including 8 wake-up/button inputs and 2 SPIs
- 3 channel PWM for colored LEDs
- Multi-mode crypto unit supporting standard security up to high-security, 96-bit and AES-128-bit protocols (compatible with car access and immobilization portfolio)
- TSSOP38 package

Benefits

- New, low-power 16-bit microcontroller core with increased memory
- Increased LF sensitivity for reduced system cost
- Accelerated inside/outside detection

How does keyless entry/go work?

As the driver enters the operating area of the keyless entry/go system and places their hand on the door handle, the car key receives a low-frequency signal from the vehicle and, if this signal matches the stored data, the key is 'woken up'.

Once woken, the key analyzes the 'challenge' signal from the vehicle and returns an encrypted 'response' signal via the UHF transmitter. The vehicle then compares the response with internally stored information and, if authentication is successful, unlocks the door. Once the driver is inside the car, the engine can be started by simply pressing the start button. The system first checks that the key is inside the car and not somewhere else, such as on the roof, and then performs the same authentication procedure when the engine is started. The combination of LF challenge and UHF response delivers low power consumption and long battery life. A back-up mode enables the use of the keyless entry/go system even when the battery is low, with power being supplied to the key via an immobilizer basestation.

Keyless entry/go system example

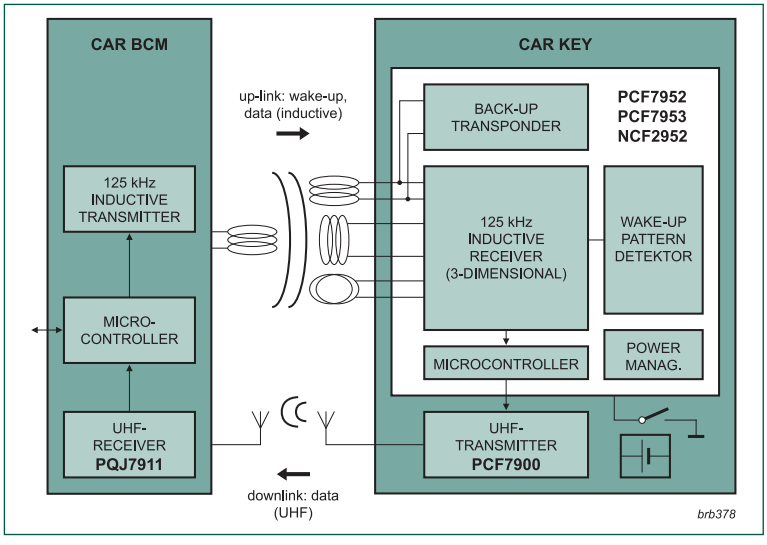

ACTIC-4G 1D (NCF2952) block diagram

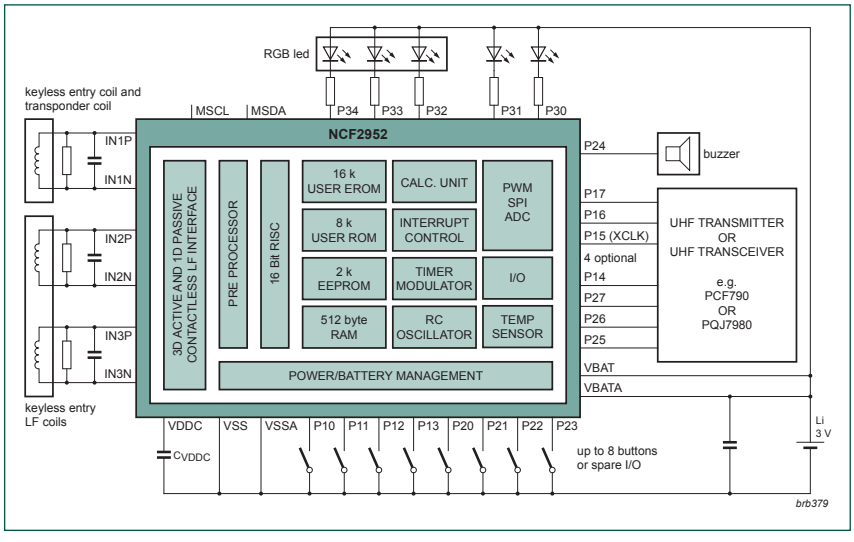

© 2012 NXP Semiconductors N.V.

All rights reserved. Reproduction in whole or in part is prohibited without the prior written consent of the copyright owner. The information presented in this document does not form part of any quotation or contract, is believed to be accurate and reliable and may be changed without notice. No liability will be accepted by the publisher for any consequence of its use. Publication thereof does not convey nor imply any license under patent- or other industrial or intellectual property rights.

Date of release: April 2012
Document order number: 9397 750 17275
Printed in the Netherlands