Parallel NOR Flash Embedded Memory

JS28F256M29EWxx, PC28F256M29EWxx, RC28F256M29EWxx
JS28F512M29EWxx, PC28F512M29EWxx, RC28F512M29EWxx
JS28F00AM29EWxx, PC28F00AM29EWxx, RC28F00AM29EWxx
PC28F00BM29EWxx, RC28F00BM29EWxx

Features

- 2Gb = stacked device (two 1Gb die)
- Supply voltage
  - V_{CC} = 2.7–3.6V (program, erase, read)
  - V_{CCQ} = 1.65–V_{CC} (I/O buffers)
- Asynchronous random/page read
  - Page size: 16 words or 32 bytes
  - Page access: 25ns
  - Random access: 100ns (Fortified BGA); 110ns (TSOP)
- Buffer program: 512-word program buffer
- Program time
  - 0.88µs per byte (1.14 MB/s) TYP when using full 512-word buffer size in buffer program
- Memory organization
  - Uniform blocks: 128-Kbytes or 64-Kwords each
- Program/erase controller
  - Embedded byte (x8)/word (x16) program algorithms
- Program/erase suspend and resume capability
  - Read from another block during a PROGRAM SUSPEND operation
  - Read or program another block during an ERASE SUSPEND operation
- BLANK CHECK operation to verify an erased block
- Unlock bypass, block erase, chip erase, and write to buffer capability
  - Fast buffered/batch programming
  - Fast block/chip erase
- V_{PP}/WP# pin protection
  - Protects first or last block regardless of block protection settings
- Software protection
  - Volatile protection
  - Nonvolatile protection
  - Password protection
  - Password access
- Extended memory block
  - 128-word (256-byte) block for permanent, secure identification
  - Programmed or locked at the factory or by the customer
- Low power consumption: Standby mode
- JESD47-compliant
  - 100,000 minimum ERASE cycles per block
  - Data retention: 20 years (TYP)
- 65nm multilevel cell (MLC) process technology
- Package
  - 56-pin TSOP, 14 x 20mm
  - 64-ball fortified BGA, 13 x 11mm
- Green packages available
  - RoHS-compliant
  - Halogen-free
- Operating temperature
  - Ambient: –40°C to +85°C

Micron Technology, Inc. reserves the right to change products or specifications without notice.
© 2012 Micron Technology, Inc. All rights reserved.
Products and specifications discussed herein are subject to change by Micron without notice.

Downloaded from Arrow.com.

Part Numbering Information

Devices are shipped from the factory with memory content bits erased to 1. For available options, such as packages or high/low protection, or for further information, contact your Micron sales representative. Part numbers can be verified at www.micron.com. Feature and specification comparison by device type is available at www.micron.com/products. Contact the factory for devices not found.

Table 1: Part Number Information

Part Number Category	Category Details	Notes
Package	JS = 56-pin TSOP, 14mm x 20mm, lead-free, halogen-free, RoHS-compliant	–
	PC = 64-ball Fortified BGA, 11mm x 13mm, lead-free, halogen-free, RoHS-compliant	–
	RC = 64-ball Fortified BGA, 11mm x 13mm, leaded	–
Product designator	28F = NOR parallel interface	–
Density	256 = 256Mb	–
	512 = 512Mb	–
	00A = 1Gb	–
	00B = 2Gb	–
Device type	M29EW = Embedded Flash memory (3V core, page, uniform block)	–
Device function	H = Highest block protected by V_{PP}/WP#	1
	L = Lowest block protected by V_{PP}/WP#	–
Features	A/B/D/E or an asterisk (*) = Combination of features, including packing media, special features, and specific customer request information	–

Note: 1. For 2Gb device, *H* also indicates protection of the lowest block by V_{PP}/WP#.

Table 2: Standard Part Numbers by Density, Medium, and Package

Density	Medium	Package		
		JS	PC	RC
256Mb	Tray	JS28F256M29EWHA	PC28F256M29EWHA	RC28F256M29EWHA
		JS28F256M29EWLA	PC28F256M29EWLA	RC28F256M29EWLA
	Tape and Reel	JS28F256M29EWHB	PC28F256M29EWHB	RC28F256M29EWHB
		JS28F256M29EWLB	PC28F256M29EWLB	–
512Mb	Tray	JS28F512M29EWHA	PC28F512M29EWHD	RC28F512M29EWHA
		JS28F512M29EWLA	PC28F512M29EWLA	RC28F512M29EWLA
	Tape and Reel	JS28F512M29EWHB	PC28F512M29EWHB	RC28F512M29EWHB
		JS28F512M29EWLB	PC28F512M29EWLB	–
1Gb	Tray	JS28F00AM29EWHA	PC28F00AM29EWHA	RC28F00AM29EWHA
		JS28F00AM29EWLA	PC28F00AM29EWLA	RC28F00AM29EWLA
	Tape and Reel	JS28F00AM29EWHB	PC28F00AM29EWHB	RC28F00AM29EWHB
2Gb	Tray	–	PC28F00BM29EWHA	RC28F00BM29EWHA

Micron Technology, Inc. reserves the right to change products or specifications without notice.
© 2012 Micron Technology, Inc. All rights reserved.

Downloaded from Arrow.com.

Table 3: Part Numbers with Security Features by Density, Medium, and Package

Density	Medium	Package		
		JS	PC	RC
256Mb	Tray	–	PC28F256M29EWHD	–
		–	PC28F256M29EWLD	–
	Tape and Reel	–	–	–
512Mb	Tray	–	PC28F512M29EWHA	–
		–	PC28F512M29EWLE	–
	Tape and Reel	–	PC28F512M29EWHE	–
1Gb	Tray	–	PC28F00AM29EWHD	–
			PC28F00AM29EWLE	
	Tape and Reel	–	–	–

Micron Technology, Inc. reserves the right to change products or specifications without notice.
© 2012 Micron Technology, Inc. All rights reserved.

Downloaded from Arrow.com.

Contents

General Description 8
Device Configurability 9
Signal Assignments 10
Signal Descriptions 12
Memory Organization 14
Memory Configuration 14
Memory Map 14
Bus Operations 15
Read 15
Write 15
Standby 16
Output Disable 16
Reset 16
Registers 17
Data Polling Register 17
Lock Register 21
Standard Command Definitions – Address-Data Cycles 24
READ and AUTO SELECT Operations 27
READ/RESET Command 27
READ CFI Command 27
AUTO SELECT Command 27
Bypass Operations 29
UNLOCK BYPASS Command 29
UNLOCK BYPASS RESET Command 29
Program Operations 30
PROGRAM Command 30
UNLOCK BYPASS PROGRAM Command 30
WRITE TO BUFFER PROGRAM Command 30
UNLOCK BYPASS WRITE TO BUFFER PROGRAM Command 32
WRITE TO BUFFER PROGRAM CONFIRM Command 33
BUFFERED PROGRAM ABORT AND RESET Command 33
PROGRAM SUSPEND Command 33
PROGRAM RESUME Command 34
Erase Operations 34
CHIP ERASE Command 34
UNLOCK BYPASS CHIP ERASE Command 34
BLOCK ERASE Command 35
UNLOCK BYPASS BLOCK ERASE Command 35
ERASE SUSPEND Command 36
ERASE RESUME Command 37
BLANK CHECK Operation 37
BLANK CHECK Commands 37
Block Protection Command Definitions – Address-Data Cycles 38
Protection Operations 41
LOCK REGISTER Commands 41
PASSWORD PROTECTION Commands 41
NONVOLATILE PROTECTION Commands 41
NONVOLATILE PROTECTION BIT LOCK BIT Commands 44
VOLATILE PROTECTION Commands 44
EXTENDED MEMORY BLOCK Commands 44

Micron Technology, Inc. reserves the right to change products or specifications without notice.
© 2012 Micron Technology, Inc. All rights reserved.

Downloaded from Arrow.com.

EXIT PROTECTION Command 45
Device Protection 46
Hardware Protection 46
Software Protection 46
Volatile Protection Mode 47
Nonvolatile Protection Mode 47
Password Protection Mode 48
Password Access 48
Common Flash Interface 50
Power-Up and Reset Characteristics 54
Absolute Ratings and Operating Conditions 56
DC Characteristics 58
Read AC Characteristics 60
Write AC Characteristics 63
Accelerated Program, Data Polling/Toggle AC Characteristics 71
Program/Erase Characteristics 73
Package Dimensions 74
Additional Resources 76
Revision History 77
Rev. E – 11/16 77
Rev. D – 07/15 77
Rev. C – 09/14 77
Rev. B – 08/12 78
Rev. A – 04/12 78

Micron Technology, Inc. reserves the right to change products or specifications without notice.
© 2012 Micron Technology, Inc. All rights reserved.

Downloaded from Arrow.com.

List of Figures

Figure 1: Logic Diagram 8
Figure 2: Dual Die Configuration – 2Gb 9
Figure 3: Single Die Configuration – Lower Densities 9
Figure 4: 56-Pin TSOP (Top View) 10
Figure 5: 64-Ball Fortified BGA 11
Figure 6: Data Polling Flowchart 19
Figure 7: Toggle Bit Flowchart 20
Figure 8: Data Polling/Toggle Bit Flowchart 21
Figure 9: Lock Register Program Flowchart 23
Figure 10: Boundary Condition of Program Buffer Size 31
Figure 11: WRITE TO BUFFER PROGRAM Flowchart 32
Figure 12: Set/Clear Nonvolatile Protection Bit Algorithm Flowchart 43
Figure 13: Software Protection Scheme 48
Figure 14: Power-Up Timing 54
Figure 15: Reset AC Timing – No PROGRAM/ERASE Operation in Progress 55
Figure 16: Reset AC Timing During PROGRAM/ERASE Operation 55
Figure 17: AC Measurement Load Circuit 57
Figure 18: AC Measurement I/O Waveform 57
Figure 19: Random Read AC Timing (8-Bit Mode) 61
Figure 20: Random Read AC Timing (16-Bit Mode) 61
Figure 21: BYTE# Transition Read AC Timing 62
Figure 22: Page Read AC Timing 62
Figure 23: WE#-Controlled Program AC Timing (8-Bit Mode) 64
Figure 24: WE#-Controlled Program AC Timing (16-Bit Mode) 65
Figure 25: CE#-Controlled Program AC Timing (8-Bit Mode) 67
Figure 26: CE#-Controlled Program AC Timing (16-Bit Mode) 68
Figure 27: Chip/Block Erase AC Timing (8-Bit Mode) 69
Figure 28: Chip/Block Erase AC Timing (16-Bit Mode) 70
Figure 29: Accelerated Program AC Timing 71
Figure 30: Data Polling AC Timing 71
Figure 31: Toggle/Alternative Toggle Bit Polling AC Timing 72
Figure 32: 56-Pin TSOP – 14mm x 20mm 74
Figure 33: 64-Ball Fortified BGA – 11mm x 13mm 75

Micron Technology, Inc. reserves the right to change products or specifications without notice.
© 2012 Micron Technology, Inc. All rights reserved.

Downloaded from Arrow.com.

List of Tables

Table 1: Part Number Information 2
Table 2: Standard Part Numbers by Density, Medium, and Package 2
Table 3: Part Numbers with Security Features by Density, Medium, and Package 3
Table 4: Signal Descriptions 12
Table 5: Blocks[2047:0] 14
Table 6: Bus Operations 15
Table 7: Data Polling Register Bit Definitions 17
Table 8: Operations and Corresponding Bit Settings 18
Table 9: Lock Register Bit Definitions 22
Table 10: Standard Command Definitions – Address-Data Cycles, 8-Bit and 16-Bit 24
Table 11: Read Electronic Signature 28
Table 12: Block Protection 28
Table 13: Block Protection Command Definitions – Address-Data Cycles, 8-Bit and 16-Bit 38
Table 14: Extended Memory Block Address and Data 44
Table 15: V_{PP}/WP# Functions 46
Table 16: Block Protection Status 49
Table 17: Query Structure Overview 50
Table 18: CFI Query Identification String 50
Table 19: CFI Query System Interface Information 51
Table 20: Device Geometry Definition 51
Table 21: Primary Algorithm-Specific Extended Query Table 52
Table 22: Power-Up Specifications 54
Table 23: Reset AC Specifications 55
Table 24: Absolute Maximum/Minimum Ratings 56
Table 25: Operating Conditions 56
Table 26: Input/Output Capacitance 57
Table 27: DC Current Characteristics 58
Table 28: DC Voltage Characteristics 59
Table 29: Read AC Characteristics 60
Table 30: WE#-Controlled Write AC Characteristics 63
Table 31: CE#-Controlled Write AC Characteristics 66
Table 32: Accelerated Program and Data Polling/Data Toggle AC Characteristics 71
Table 33: Program/Erase Characteristics 73
Table 34: Technical Notes 76

Micron Technology, Inc. reserves the right to change products or specifications without notice.
© 2012 Micron Technology, Inc. All rights reserved.

Downloaded from Arrow.com.

General Description

The device is an asynchronous, uniform block, parallel NOR Flash memory device. READ, ERASE, and PROGRAM operations are performed using a single low-voltage supply. Upon power-up, the device defaults to read array mode.

The main memory array is divided into uniform blocks that can be erased independently so that valid data can be preserved while old data is purged. PROGRAM and ERASE commands are written to the command interface of the memory. An on-chip program/erase controller simplifies the process of programming or erasing the memory by taking care of all special operations required to update the memory contents. The end of a PROGRAM or ERASE operation can be detected and any error condition can be identified. The command set required to control the device is consistent with JEDEC standards.

CE#, OE#, and WE# control the bus operation of the device and enable a simple connection to most microprocessors, often without additional logic.

The device supports asynchronous random read and page read from all blocks of the array. It also features an internal program buffer that improves throughput by programming 512 words via one command sequence. A 128-word extended memory block overlaps addresses with array block 0. Users can program this additional space and then protect it to permanently secure the contents. The device also features different levels of hardware and software protection to secure blocks from unwanted modification.

Note: For a 2Gb device, A[26] = V_{IH} selects the upper die and A[26] = V_{IL} selects the lower die. Setup commands should be re-issued to the device when a different die is selected.

Figure 1: Logic Diagram

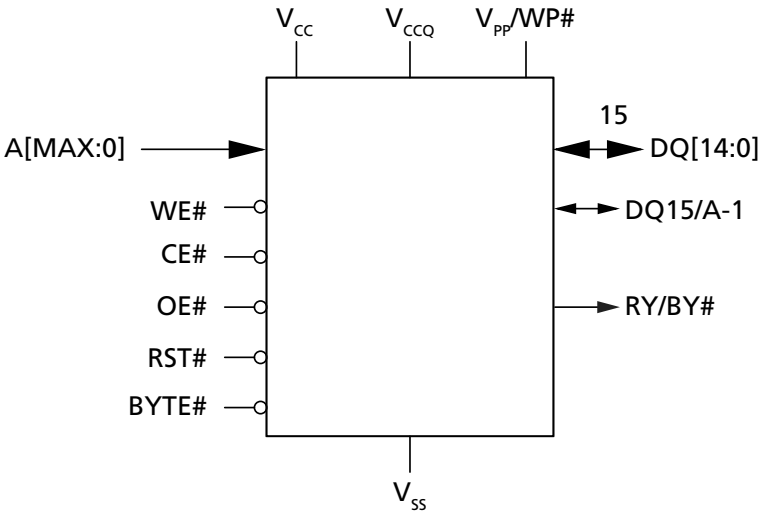

Micron Technology, Inc. reserves the right to change products or specifications without notice.
© 2012 Micron Technology, Inc. All rights reserved.

Downloaded from Arrow.com.

Device Configurability

Figure 2: Dual Die Configuration – 2Gb

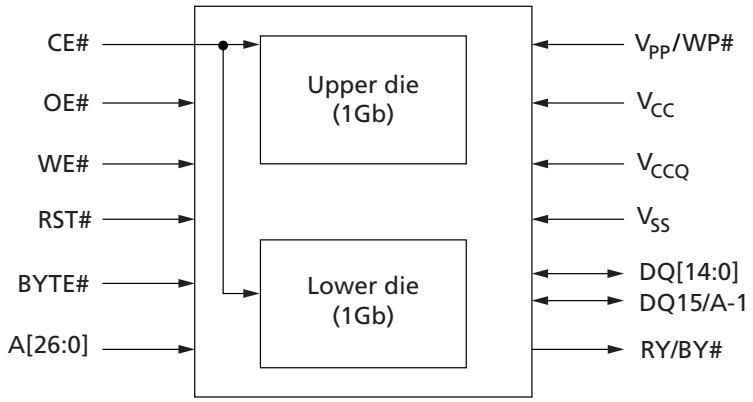

Note: 1. A[26] = V_{IH} selects the upper die; A[26] = V_{IL} selects the lower die.

Figure 3: Single Die Configuration – Lower Densities

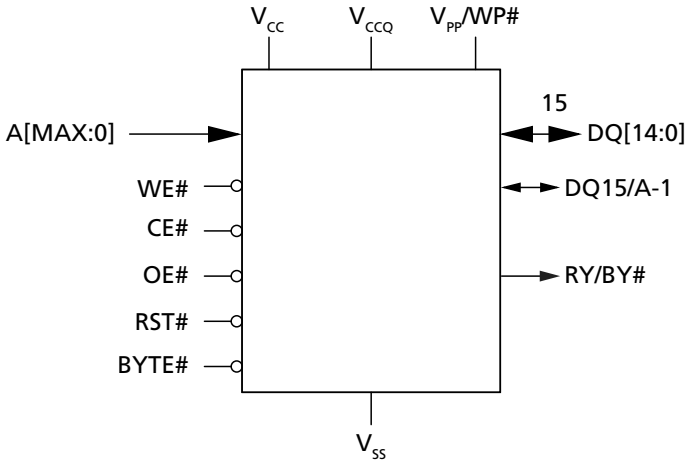

Micron Technology, Inc. reserves the right to change products or specifications without notice.
© 2012 Micron Technology, Inc. All rights reserved.

Downloaded from Arrow.com.

Signal Assignments

Figure 4: 56-Pin TSOP (Top View)

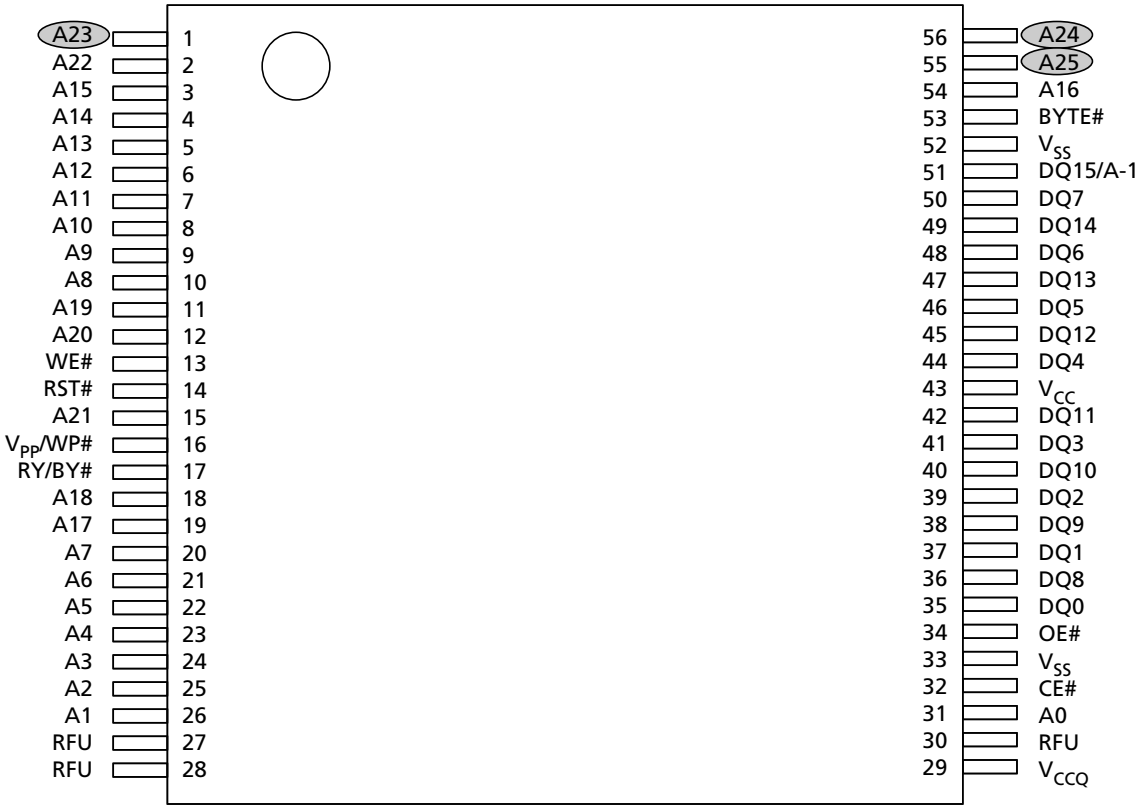

Notes:
1. A-1 is the least significant address bit in x8 mode.
2. A23 is valid for 256Mb and above; otherwise, it is RFU.
3. A24 is valid for 512Mb and above; otherwise, it is RFU.
4. A25 is valid for 1Gb and above; otherwise, it is RFU.

Micron Technology, Inc. reserves the right to change products or specifications without notice.
© 2012 Micron Technology, Inc. All rights reserved.

Downloaded from Arrow.com.

Figure 5: 64-Ball Fortified BGA

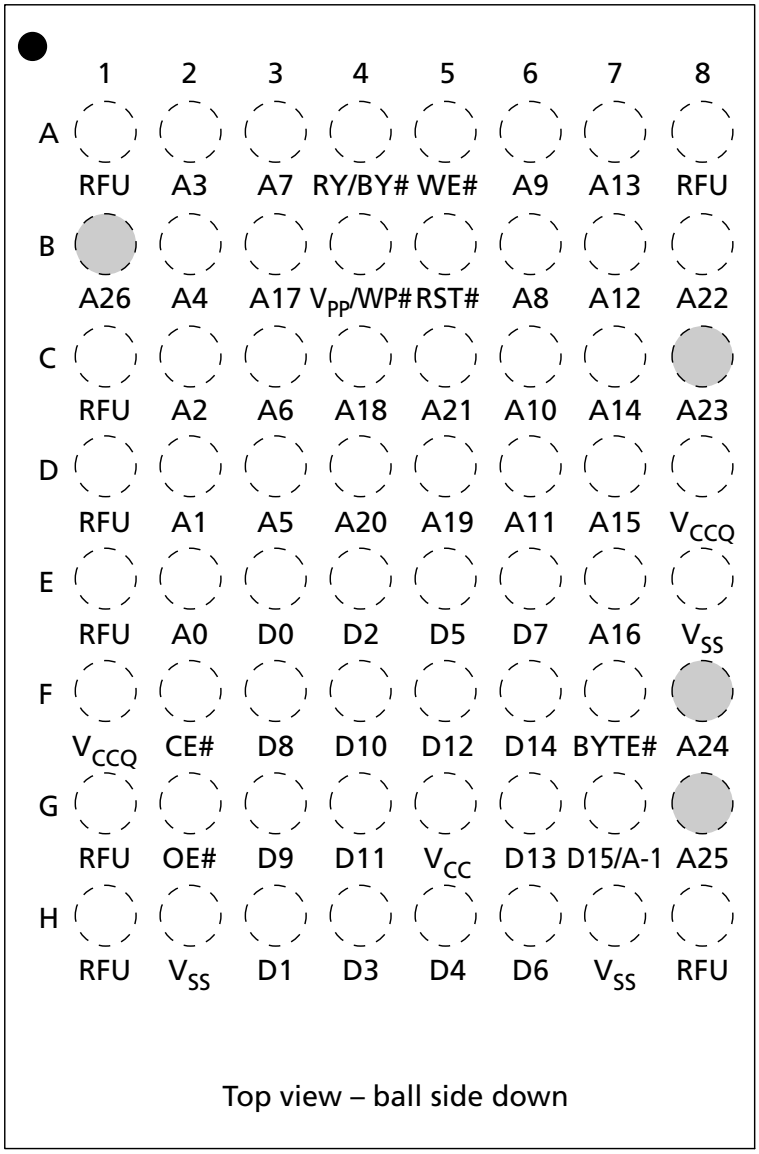

Notes:
1. A-1 is the least significant address bit in x8 mode.
2. A23 is valid for 256Mb and above; otherwise, it is RFU.
3. A24 is valid for 512Mb and above; otherwise, it is RFU.
4. A25 is valid for 1Gb and above; otherwise, it is RFU.
5. A26 is valid for 2Gb only; otherwise it is RFU.

Micron Technology, Inc. reserves the right to change products or specifications without notice.
© 2012 Micron Technology, Inc. All rights reserved.

Downloaded from Arrow.com.

Signal Descriptions

The signal description table below is a comprehensive list of signals for this device family. All signals listed may not be supported on this device. See Signal Assignments for information specific to this device.

Table 4: Signal Descriptions

Name	Type	Description
A[MAX:0]	Input	**Address:** Selects the cells in the array to access during READ operations. During WRITE operations, they control the commands sent to the command interface of the program/erase controller.
CE#	Input	**Chip enable:** Activates the device, enabling READ and WRITE operations to be performed. When CE# is HIGH, the device goes to standby and data outputs are High-Z.
OE#	Input	**Output enable:** Active LOW input. OE# LOW enables the data output buffers during READ cycles. When OE# is HIGH, data outputs are High-Z.
WE#	Input	**Write enable:** Controls WRITE operations to the device. Address is latched on the falling edge of WE# and data is latched on the rising edge.
V_{PP}/WP#	Input	**V_{PP}/Write Protect:** Provides WRITE PROTECT function and V_{PPH} function. These functions protect the lowest or highest block and enable the device to enter unlock bypass mode, respectively. (Refer to Hardware Protection and Bypass Operations for details.)
BYTE#	Input	**Byte/word organization select:** Switches between x8 and x16 bus modes. When BYTE# is LOW, the device is in x8 mode; when HIGH, the device is in x16 mode. Under byte configuration, BYTE# should not be toggled during any WRITE operation. **Caution:** This pin cannot be floated.
RST#	Input	**Reset:** Applies a hardware reset to the device control logic and places it in standby, which is achieved by holding RST# LOW for at least ^{t}PLPH. After RST# goes HIGH, the device is ready for READ and WRITE operations (after ^{t}PHEL or ^{t}PHWL, whichever occurs last).
DQ[7:0]	I/O	**Data I/O:** Outputs the data stored at the selected address during a READ operation. During WRITE operations, they represent the commands sent to the command interface of the internal state machine.
DQ[14:8]	I/O	**Data I/O:** Outputs the data stored at the selected address during a READ operation when BYTE# is HIGH. When BYTE# is LOW, these pins are not used and are High-Z. During WRITE operations, these bits are not used. When reading the data polling register, these bits should be ignored.
DQ15/A-1	I/O	**Data I/O or address input:** When the device operates in x16 bus mode, this pin behaves as data I/O, together with DQ[14:8]. When the device operates in x8 bus mode, this pin behaves as the least significant bit of the address. Except where stated explicitly otherwise, DQ15 = data I/O (x16 mode); A-1 = address input (x8 mode).
RY/BY#	Output	**Ready busy:** Open-drain output that can be used to identify when the device is performing a PROGRAM or ERASE operation. During PROGRAM or ERASE operations, RY/BY# is LOW, and is High-Z during read mode, auto select mode, and erase suspend mode. The use of an open-drain output enables the RY/BY# pins from several devices to be connected to a single pull-up resistor to V_{CCQ}. A low value will then indicate that one (or more) of the devices is (are) busy. A 10K Ohm or bigger resistor is recommended as pull-up resistor to achieve 0.1V V_{OL}.

Micron Technology, Inc. reserves the right to change products or specifications without notice.
© 2012 Micron Technology, Inc. All rights reserved.

Downloaded from Arrow.com.

Table 4: Signal Descriptions (Continued)

Name	Type	Description
V_{CC}	Supply	**Supply voltage:** Provides the power supply for READ, PROGRAM, and ERASE operations. The device is disabled when $V_{CC} \leq V_{LKO}$. If the program/erase controller is programming or erasing during this time, then the operation aborts and the contents being altered will be invalid. A 0.1µF and 0.01µF capacitor should be connected between V_{CC} and V_{SS} to decouple the current surges from the power supply. The PCB track widths must be sufficient to carry the currents required during PROGRAM and ERASE operations (see DC Characteristics).
V_{CCQ}	Supply	**I/O supply voltage:** Provides the power supply to the I/O pins and enables all outputs to be powered independently from V_{CC}. A 0.1µF and 0.01µF capacitor should be connected between V_{CCQ} and V_{SS} to decouple the current surges from the power supply.
V_{SS}	Supply	**Ground:** All V_{SS} pins must be connected to the system ground.
RFU	—	**Reserved for future use:** Reserved by Micron for future device functionality and enhancement. These should be treated in the same way as a DNU signal.
DNU	—	**Do not use:** Do not connect to any other signal, or power supply; must be left floating.
NC	—	**No connect:** No internal connection; can be driven or floated.

Micron Technology, Inc. reserves the right to change products or specifications without notice.
© 2012 Micron Technology, Inc. All rights reserved.

Downloaded from Arrow.com.

Memory Organization

Memory Configuration

The main memory array is divided into 128KB or 64KW uniform blocks.

Memory Map

Table 5: Blocks[2047:0]

Block	Block Size	Address Range (x8)		Block Size	Address Range (x16)	
		Start	End		Start	End
2047	128KB	FFE 0000h	FFF FFFFh	64KW	7FF 0000h	7FF FFFFh
⋮		⋮	⋮		⋮	⋮
1023		7FE 0000h	7FF FFFFh		3FF 0000h	3FF FFFFh
⋮		⋮	⋮		⋮	⋮
511		3FE 0000h	3FF FFFFh		1FF 0000h	1FF FFFFh
⋮		⋮	⋮		⋮	⋮
255		1FE 0000h	1FF FFFFh		0FF 0000h	0FF FFFFh
⋮		⋮	⋮		⋮	⋮
127		0FE 0000h	0FF FFFFh		07F 0000h	07F FFFFh
⋮		⋮	⋮		⋮	⋮
63		07E 0000h	07F FFFFh		03F 0000h	03F FFFFh
⋮		⋮	⋮		⋮	⋮
0		000 0000h	001 FFFFh		000 0000h	000 FFFFh

Note: 1. 128Mb device = Blocks 0–127; 256Mb device = Blocks 0–255; 512Mb device = Blocks 0–511; 1Gb device = Blocks 0–1023; 2Gb device = Blocks 0–2047.

Micron Technology, Inc. reserves the right to change products or specifications without notice.
© 2012 Micron Technology, Inc. All rights reserved.

Downloaded from Arrow.com.

Bus Operations

Table 6: Bus Operations

Notes 1 and 2 apply to entire table

Operation	CE#	OE#	WE#	RST#	V_{PP}/WP#	8-Bit Mode			16-Bit Mode	
						A[MAX:0], DQ15/A-1	DQ[14:8]	DQ[7:0]	A[MAX:0]	DQ15/A-1, DQ[14:0]
READ	L	L	H	H	X	Cell address	High-Z	Data output	Cell address	Data output
WRITE	L	H	L	H	H[3]	Command address	High-Z	Data input[4]	Command address	Data input[4]
STANDBY	H	X	X	H	X	X	High-Z	High-Z	X	High-Z
OUTPUT DISABLE	L	H	H	H	X	X	High-Z	High-Z	X	High-Z
RESET	X	X	X	L	X	X	High-Z	High-Z	X	High-Z

Notes:
1. Typical glitches of less than 3ns on CE#, OE#, WE#, and RST# are ignored by the device and do not affect bus operations.
2. H = Logic level HIGH (V_{IH}); L = Logic level LOW (V_{IL}); X = HIGH or LOW.
3. If WP# is LOW, then the highest or the lowest block remains protected, depending on line item.
4. Data input is required when issuing a command sequence or when performing data polling or block protection.

Read

Bus READ operations read from the memory cells, registers, or CFI space. To accelerate the READ operation, the memory array can be read in page mode where data is internally read and stored in a page buffer.

Page size is 16 words (32 bytes) and is addressed by address inputs A[3:0] in x16 bus mode and A[3:0] plus DQ15/A-1 in x8 bus mode. The extended memory blocks and CFI area do not support page read mode.

A valid bus READ operation involves setting the desired address on the address inputs, taking CE# and OE# LOW, and holding WE# HIGH. The data I/Os will output the value. If CE# goes HIGH and returns LOW for a subsequent access, a random read access is perform and ^{t}ACC or ^{t}CE is required. (See AC Characteristics for details about when the output becomes valid.)

Write

Bus WRITE operations write to the command interface. A valid bus WRITE operation begins by setting the desired address on the address inputs. The address inputs are latched by the command interface on the falling edge of CE# or WE#, whichever occurs last. The data I/Os are latched by the command interface on the rising edge of CE# or WE#, whichever occurs first. OE# must remain HIGH during the entire bus WRITE operation (See AC Characteristics for timing requirement details).

Micron Technology, Inc. reserves the right to change products or specifications without notice.
© 2012 Micron Technology, Inc. All rights reserved.

Downloaded from Arrow.com.

Standby

Driving CE# HIGH in read mode causes the device to enter standby and data I/Os to be High-Z (See DC Characteristics).

During PROGRAM or ERASE operations, the device will continue to use the program/erase supply current (I_{CC3}) until the operation completes. When CE# is HIGH, the device cannot be placed into standby mode during a PROGRAM/ERASE operation.

Output Disable

Data I/Os are High-Z when OE# is HIGH.

Reset

During reset mode the device is deselected and the outputs are High-Z. The device is in reset mode when RST# is LOW. The power consumption is reduced to the standby level, independently from CE#, OE#, or WE# inputs.

When RST# is HIGH, a time of ^{t}PHEL is required before a READ operation can access the device, and a delay of ^{t}PHWL is required before a write sequence can be initiated. After this wake-up interval, normal operation is restored, the device defaults to read array mode, and the data polling register is reset.

If RST# is driven LOW during a PROGRAM/ERASE operation or any other operation that requires writing to the device, the operation will abort within ^{t}PLRH, and memory contents at the aborted block or address are no longer valid.

Micron Technology, Inc. reserves the right to change products or specifications without notice.
© 2012 Micron Technology, Inc. All rights reserved.

Downloaded from Arrow.com.

Registers

Data Polling Register

Table 7: Data Polling Register Bit Definitions

Note 1 applies to entire table

Bit	Name	Settings	Description	Notes
DQ7	Data polling bit	0 or 1, depending on operations	Monitors whether the program/erase controller has successfully completed its operation, or has responded to an ERASE SUSPEND operation.	2, 4
DQ6	Toggle bit	Toggles: 0 to 1; 1 to 0; and so on	Monitors whether the program, erase, or blank check controller has successfully completed its operations, or has responded to an ERASE SUSPEND operation. During a PROGRAM/ERASE/BLANK CHECK operation, DQ6 toggles from 0 to 1, 1 to 0, and so on, with each successive READ operation from any address.	3, 4, 5
DQ5	Error bit	0 = Success 1 = Failure	Identifies errors detected by the program/erase controller. DQ5 is set to 1 when a PROGRAM, BLOCK ERASE, or CHIP ERASE operation fails to write the correct data to the memory, or when a BLANK CHECK operation fails.	4, 6
DQ3	Erase timer bit	0 = Erase not in progress 1 = Erase in progress	Identifies the start of program/erase controller operation during a BLOCK ERASE command. Before the program/erase controller starts, this bit set to 0, and additional blocks to be erased can be written to the command interface.	4
DQ2	Alternative toggle bit	Toggles: 0 to 1; 1 to 0; and so on	During CHIP ERASE, BLOCK ERASE, and ERASE SUSPEND operations, DQ2 toggles from 0 to 1, 1 to 0, and so on, with each successive READ operation from addresses within the blocks being erased.	3, 4
DQ1	Buffered program abort bit	1 = Abort	Indicates a BUFFER PROGRAM operation abort. The BUFFERED PROGRAM ABORT and RESET command must be issued to return the device to read mode (see WRITE TO BUFFER PROGRAM command).	

Notes:
1. The data polling register can be read during PROGRAM, ERASE, or ERASE SUSPEND operations; the READ operation outputs data on DQ[7:0].
2. For a PROGRAM operation in progress, DQ7 outputs the complement of the bit being programmed. For a BUFFER PROGRAM operation, DQ7 outputs the complement of the bit for the last word being programmed in the write buffer. For a READ operation from the address previously programmed successfully, DQ7 outputs existing DQ7 data. For a READ operation from addresses with blocks to be erased while an ERASE SUSPEND operation is in progress, DQ7 outputs 0; upon successful completion of the ERASE SUSPEND operation, DQ7 outputs 1. For an ERASE operation in progress, DQ7 outputs 0; upon ERASE operation's successful completion, DQ7 outputs 1.
3. After successful completion of a PROGRAM, ERASE, or BLANK CHECK operation, the device returns to read mode.
4. During erase suspend mode, READ operations to addresses within blocks not being erased output memory array data as if in read mode. A protected block is treated the same as a block not being erased. See the Toggle Flowchart for more information.

Micron Technology, Inc. reserves the right to change products or specifications without notice.
© 2012 Micron Technology, Inc. All rights reserved.

Downloaded from Arrow.com.

5. During erase suspend mode, DQ6 toggles when addressing a cell within a block being erased. The toggling stops when the program/erase controller has suspended the ERASE operation. See the Toggle Flowchart for more information.
6. When DQ5 is set to 1, a READ/RESET (F0h) command must be issued before any subsequent command.

Table 8: Operations and Corresponding Bit Settings

Note 1 applies to entire table

Operation	Address	DQ7	DQ6	DQ5	DQ3	DQ2	DQ1	RY/BY#	Notes
PROGRAM	Any address	DQ7#	Toggle	0	–	–	0	0	2
BLANK CHECK	Any address	1	Toggle	0	–	–	0	0	
CHIP ERASE	Any address	0	Toggle	0	1	Toggle	–	0	
BLOCK ERASE before time-out	Erasing block	0	Toggle	0	0	Toggle	–	0	
	Non-erasing block	0	Toggle	0	0	No toggle	–	0	
BLOCK ERASE	Erasing block	0	Toggle	0	1	Toggle	–	0	
	Non-erasing block	0	Toggle	0	1	No toggle	–	0	
PROGRAM SUSPEND	Programming block	Invalid operation						High-Z	
	Nonprogramming block	Outputs memory array data as if in read mode						High-Z	
ERASE SUSPEND	Erasing block	1	No Toggle	0	–	Toggle	–	High-Z	
	Non-erasing block	Outputs memory array data as if in read mode						High-Z	
PROGRAM during ERASE SUSPEND	Erasing block	DQ7#	Toggle	0	–	Toggle	–	0	2
	Non-erasing block	DQ7#	Toggle	0	–	No Toggle	–	0	2
BUFFERED PROGRAM ABORT	Any address	DQ7#	Toggle	0	–	–	1	High-Z	
PROGRAM Error	Any address	DQ7#	Toggle	1	–	–	–	High-Z	2
ERASE Error	Any address	0	Toggle	1	1	Toggle	–	High-Z	
BLANK CHECK Error	Any address	0	Toggle	1	1	Toggle	–	High-Z	

Notes:
1. Unspecified data bits should be ignored.
2. DQ7# for buffer program is related to the last address location loaded.

Micron Technology, Inc. reserves the right to change products or specifications without notice.
© 2012 Micron Technology, Inc. All rights reserved.

Downloaded from Arrow.com.

Figure 6: Data Polling Flowchart

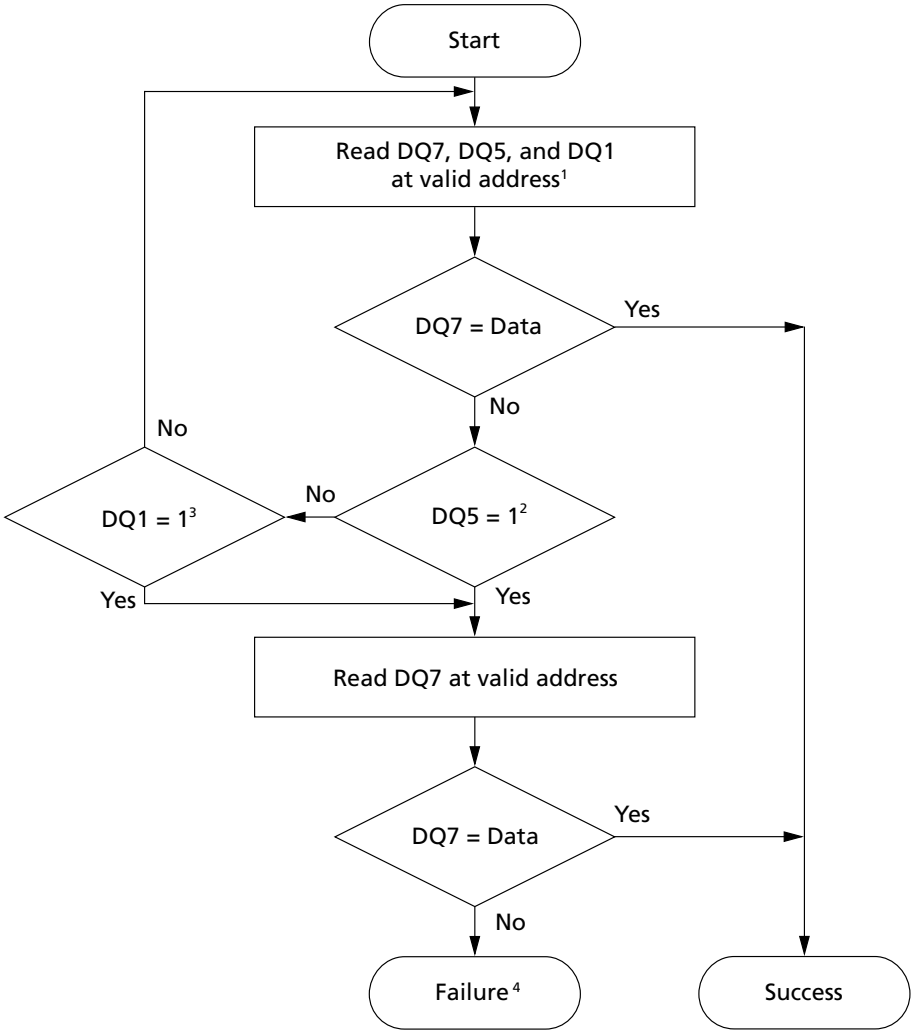

Notes:
1. Valid address is the address being programmed or an address within the block being erased.
2. Failure results: DQ5 = 1 indicates an operation error. A READ/RESET command must be issued before any subsequent command.
3. DQ1 = 1 indicates a WRITE TO BUFFER PROGRAM ABORT operation. A full three-cycle RESET (AAh/55h/F0h) command sequence must be used to reset the aborted device.
4. The data polling process does not support the BLANK CHECK operation. The process represented in the Toggle Bit Flowchart figure can provide information on the BLANK CHECK operation.

Micron Technology, Inc. reserves the right to change products or specifications without notice.
© 2012 Micron Technology, Inc. All rights reserved.

Downloaded from Arrow.com.

Figure 7: Toggle Bit Flowchart

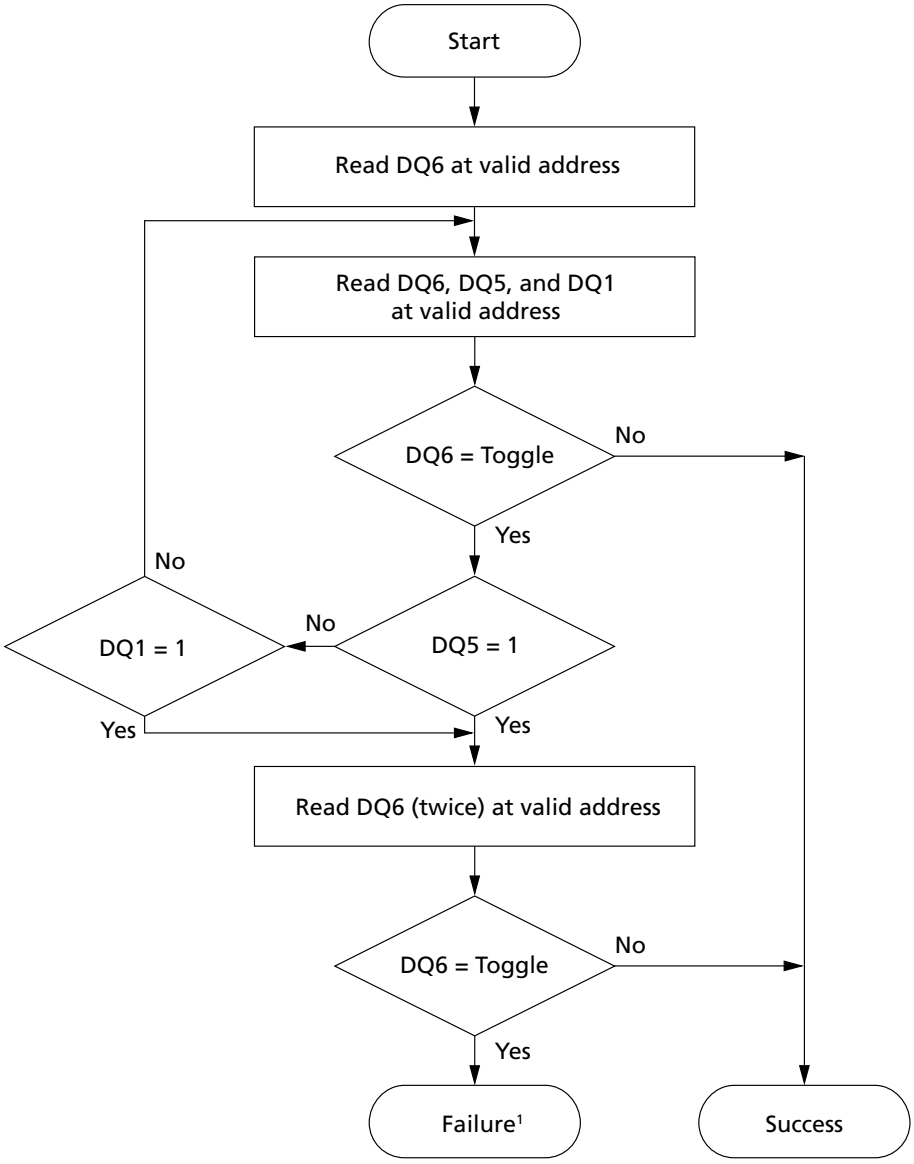

Notes: 1. Failure results: DQ5 = 1 indicates an operation error; DQ1 = 1 indicates a WRITE TO BUFFER PROGRAM ABORT operation.
2. The toggle bit process supports the BLANK CHECK operation.

Micron Technology, Inc. reserves the right to change products or specifications without notice.
© 2012 Micron Technology, Inc. All rights reserved.

Downloaded from Arrow.com.

Figure 8: Data Polling/Toggle Bit Flowchart

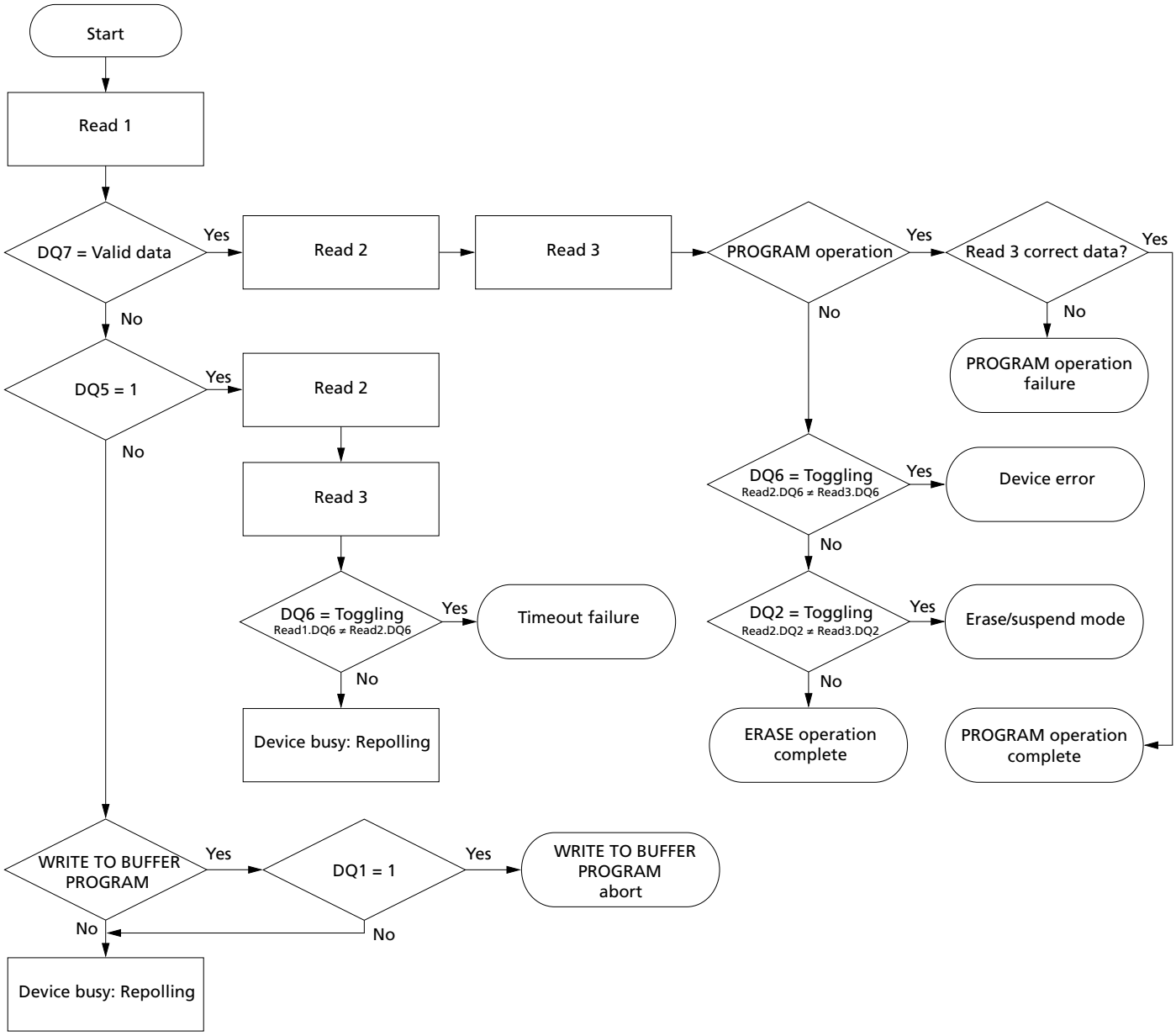

Lock Register

Micron Technology, Inc. reserves the right to change products or specifications without notice.
© 2012 Micron Technology, Inc. All rights reserved.

Downloaded from Arrow.com.

Table 9: Lock Register Bit Definitions

Note 1 applies to entire table

Bit	Name	Settings	Description	Notes
DQ2	Password protection mode lock bit	0 = Password protection mode enabled 1 = Password protection mode disabled (Default)	Places the device permanently in password protection mode.	2
DQ1	Nonvolatile protection mode lock bit	0 = Nonvolatile protection mode enabled with password protection mode permanently disabled 1 = Nonvolatile protection mode enabled (Default)	Places the device in nonvolatile protection mode with password protection mode permanently disabled. When shipped from the factory, the device will operate in nonvolatile protection mode, and the memory blocks are unprotected.	2
DQ0	Extended memory block protection bit	0 = Protected 1 = Unprotected (Default)	If the device is shipped with the extended memory block unlocked, the block can be protected by setting this bit to 0. The extended memory block protection status can be read in auto select mode by issuing an AUTO SELECT command.	

Notes:
1. The lock register is a 16-bit, one-time programmable register. DQ[15:3] are reserved and are set to a default value of 1.
2. The password protection mode lock bit and nonvolatile protection mode lock bit cannot both be programmed to 0. Any attempt to program one while the other is programmed causes the operation to abort, and the device returns to read mode. The device is shipped from the factory with the default setting.

Micron Technology, Inc. reserves the right to change products or specifications without notice.
© 2012 Micron Technology, Inc. All rights reserved.

Downloaded from Arrow.com.

Figure 9: Lock Register Program Flowchart

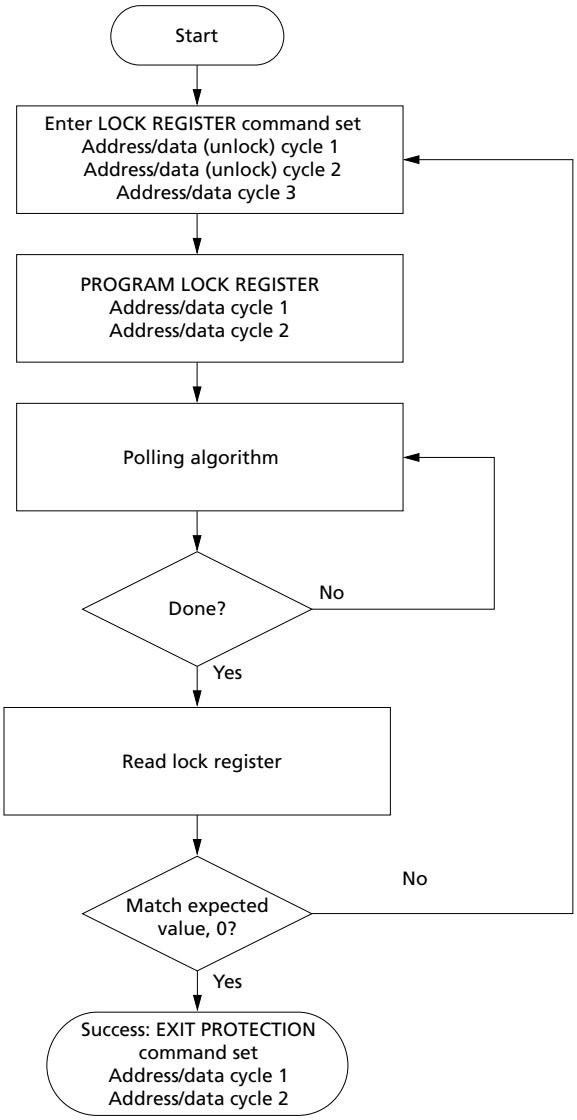

Notes:
1. Each lock register bit can be programmed only once.
2. See the Block Protection Command Definitions table for address-data cycle details.
3. DQ5 and DQ1 are ignored in this algorithm flow.

Micron Technology, Inc. reserves the right to change products or specifications without notice.
© 2012 Micron Technology, Inc. All rights reserved.

Downloaded from Arrow.com.

Standard Command Definitions – Address-Data Cycles

Table 10: Standard Command Definitions – Address-Data Cycles, 8-Bit and 16-Bit

Note 1 applies to entire table

Command and Code/Subcode	Bus Size	Address and Data Cycles												Notes
		1st		2nd		3rd		4th		5th		6th		
		A	D	A	D	A	D	A	D	A	D	A	D	
READ and AUTO SELECT Operations														
READ/RESET (F0h)	x8	X	F0											2
		AAA	AA	555	55	X	F0							
	x16	X	F0											
		555	AA	2AA	55	X	F0							
READ CFI (98h)	x8	AAA	98											
	x16	555												
AUTO SELECT (90h)	x8	AAA	AA	555	55	AAA	90	Note 3	Note 3					4, 5
	x16	555		2AA		555								
BYPASS Operations														
UNLOCK BYPASS (20h)	x8	AAA	AA	555	55	AAA	20							
	x16	555		2AA		555								
UNLOCK BYPASS RESET (90h/00h)	x8	X	90	X	00									
	x16													
PROGRAM Operations														
PROGRAM (A0h)	x8	AAA	AA	555	55	AAA	A0	PA	PD					
	x16	555		2AA		555								
UNLOCK BYPASS PROGRAM (A0h)	x8	X	A0	PA	PD									6
	x16													
WRITE TO BUFFER PROGRAM (25h)	x8	AAA	AA	555	55	BAd	25	BAd	N	PA	PD			7, 8, 9
	x16	555		2AA										
UNLOCK BYPASS WRITE TO BUFFER PROGRAM (25h)	x8	BAd	25	BAd	N	PA	PD							6
	x16													
WRITE TO BUFFER PROGRAM CONFIRM (29h)	x8	BAd	29											7
	x16													
BUFFERED PROGRAM ABORT and RESET (F0h)	x8	AAA	AA	555	55	AAA	F0							
	x16	555		2AA		555								
PROGRAM SUSPEND (B0h)	x8	X	B0											
	x16													
PROGRAM RESUME (30h)	x8	X	30											
	x16													
ERASE Operations														

Micron Technology, Inc. reserves the right to change products or specifications without notice.
© 2012 Micron Technology, Inc. All rights reserved.

Downloaded from Arrow.com.

Table 10: Standard Command Definitions – Address-Data Cycles, 8-Bit and 16-Bit (Continued)

Note 1 applies to entire table

Command and Code/Subcode	Bus Size	Address and Data Cycles												Notes
		1st		2nd		3rd		4th		5th		6th		
		A	D	A	D	A	D	A	D	A	D	A	D	
CHIP ERASE (80/10h)	x8	AAA	AA	555	55	AAA	80	AAA	AA	555	55	AAA	10	
	x16	555		2AA		555		555		2AA		555		
UNLOCK BYPASS CHIP ERASE (80/10h)	x8	X	80	X	10									6
	x16													
BLOCK ERASE (80/30h)	x8	AAA	AA	555	55	AAA	80	AAA	AA	555	55	BAd	30	10
	x16	555		2AA		555		555		2AA				
UNLOCK BYPASS BLOCK ERASE (80/30h)	x8	X	80	BAd	30									6
	x16													
ERASE SUSPEND (B0h)	x8	X	B0											
	x16													
ERASE RESUME (30h)	x8	X	30											
	x16													
BLANK CHECK Operations														
BLANK CHECK SETUP (EB/76h)	x8	AAA	AA	555	55	BAd	EB	BAd	76	BAd	00	BAd	00	
	x16	555		2AA										
BLANK CHECK CONFIRM and READ (29h)	x8	BAd	29											
	x16													

Notes:
1. A = Address; D = Data; X = "Don't Care;" BAd = Any address in the block; N + 1 = number of words (x16)/bytes (x8) to be programmed; PA = Program address; PD = Program data; Gray shading = Not applicable. All values in the table are hexadecimal. Some commands require both a command code and subcode. For the 2Gb device, the set-up command must be issued for each selected die.
2. A full three-cycle RESET command sequence must be used to reset the device in the event of a buffered program abort error (DQ1 = 1).
3. These cells represent READ cycles (versus WRITE cycles for the others).
4. AUTO SELECT enables the device to read the manufacturer code, device code, block protection status, and extended memory block protection indicator.
5. AUTO SELECT addresses and data are specified in the Electronic Signature table and the Extended Memory Block Protection table.
6. For any UNLOCK BYPASS ERASE/PROGRAM command, the first two UNLOCK cycles are unnecessary.
7. BAd must be the same as the address loaded during the WRITE TO BUFFER PROGRAM 3rd and 4th cycles.
8. WRITE TO BUFFER PROGRAM operation: maximum cycles = 261 (x8) and 517 (x16). UNLOCK BYPASS WRITE TO BUFFER PROGRAM operation: maximum cycles = 259 (x8), 515 (x16). WRITE TO BUFFER PROGRAM operation: N + 1 = number of words (x16)/bytes (x8) to be programmed; maximum buffer size = 256 bytes (x8) and 1024 bytes (x16).
9. For x8, A[MAX:7] address pins should remain unchanged while A[6:0] and A-1 pins are used to select a byte within the N + 1 byte page. For x16, A[MAX:9] address pins should

Micron Technology, Inc. reserves the right to change products or specifications without notice.
© 2012 Micron Technology, Inc. All rights reserved.

Downloaded from Arrow.com.

remain unchanged while A[8:0] pins are used to select a word within the N+1 word page.

10. BLOCK ERASE address cycles can extend beyond six address-data cycles, depending on the number of blocks to erase.

Micron Technology, Inc. reserves the right to change products or specifications without notice.
© 2012 Micron Technology, Inc. All rights reserved.

Downloaded from Arrow.com.

READ and AUTO SELECT Operations

READ/RESET Command

The READ/RESET (F0h) command returns the device to read mode and resets the errors in the data polling register. One or three bus WRITE operations can be used to issue the READ/RESET command. Note: A full three-cycle RESET command sequence must be used to reset the device in the event of a buffered program abort error (DQ1 = 1).

Once a PROGRAM or ERASE operation begins, RESET commands are ignored until the operation is complete. Read/reset serves primarily to return the device to read mode from a failed PROGRAM or ERASE operation. Read/reset may cause a return to read mode from undefined states that might result from invalid command sequences. A hardware reset may be required to return to normal operation from some undefined states.

To exit the unlock bypass mode, the system must issue a two-cycle UNLOCK BYPASS RESET command sequence. A READ/RESET command will not exit unlock bypass mode.

A READ/RESET command will not abort an ERASE operation while in erase suspend.

READ CFI Command

The READ CFI (98h) command puts the device in read CFI mode and is only valid when the device is in read array or auto select mode. One bus WRITE cycle is required to issue the command.

Once in read CFI mode, bus READ operations will output data from the CFI memory area (Refer to the Common Flash Interface for details). A READ/RESET command must be issued to return the device to the previous mode (read array or auto select). A second READ/RESET command is required to put the device in read array mode from auto select mode.

AUTO SELECT Command

At power-up or after a hardware reset, the device is in read mode. It can then be put in auto select mode by issuing an AUTO SELECT (90h) command. Auto select mode enables the following device information to be read:

- Electronic signature, which includes manufacturer and device code information as shown in the Electronic Signature table.
- Block protection, which includes the block protection status and extended memory block protection indicator, as shown in the Block Protection table.

Electronic signature or block protection information is read by executing a READ operation with control signals and addresses set, as shown in the Read Electronic Signature table or the Block Protection table, respectively. In addition, this device information can be read or set by issuing an AUTO SELECT command.

Auto select mode can be used by the programming equipment to automatically match a device with the application code to be programmed.

Three consecutive bus WRITE operations are required to issue an AUTO SELECT command. The device remains in auto select mode until a READ/RESET or READ CFI command is issued.

Micron Technology, Inc. reserves the right to change products or specifications without notice.
© 2012 Micron Technology, Inc. All rights reserved.

Downloaded from Arrow.com.

The device cannot enter auto select mode when a PROGRAM or ERASE operation is in progress (RY/BY# LOW). However, auto select mode can be entered if the PROGRAM or ERASE operation has been suspended by issuing a PROGRAM SUSPEND or ERASE SUSPEND command.

Auto select mode is exited by performing a reset. The device returns to read mode unless it entered auto select mode after an ERASE SUSPEND or PROGRAM SUSPEND command, in which case it returns to erase or program suspend mode.

Table 11: Read Electronic Signature

Note 1 applies to entire table

Read Cycle		CE#	OE#	WE#	Address Input						Data Input/Output		
					8-Bit/16-Bit					8-Bit Only	8-Bit Only		16-Bit Only
					A[MAX:4]	A3	A2	A1	A0	DQ[15]/A-1	DQ[14:8]	DQ[7:0]	DQ[15]/A-1, DQ[14:0]
Manufacturer code		L	L	H	L	L	L	L	L	X	X	89h	0089h
Device code 1		L	L	H	L	L	L	L	H	X	X	7Eh	227Eh
Device code 2	256Mb	L	L	H	L	H	H	H	L	X	X	22h	2222h
	512Mb	L	L	H	L	H	H	H	L	X	X	23h	2223h
	1Gb	L	L	H	L	H	H	H	L	X	X	28h	2228h
	2Gb	L	L	H	L	H	H	H	L	X	X	48h	2248h
Device code 3		L	L	H	L	H	H	H	H	X	X	01h	2201h

Note: 1. H = Logic level high (V_{IH}); L = Logic level low (V_{IL}); X = HIGH or LOW.

Table 12: Block Protection

Note 1 applies to entire table

Read Cycle		CE#	OE#	WE#	Address Input					Data Input/Output		
					8-Bit/16-Bit				8-Bit Only	8-Bit Only		16-Bit Only
					A[MAX:16]	A[15:2]	A1	A0	DQ[15]/A-1	DQ[14:8]	DQ[7:0]	DQ[15]/A-1, DQ[14:0]
Extended memory Block protection indicator (DQ7)	M29EWL	L	L	H	L	L	H	H	X	X	89h[2]	0089h[2]
											09h[3]	0009h[3]
	M29EWH	L	L	H	L	L	H	H	X	X	99h[2]	0099h[2]
											19h[3]	0019h[3]
Block protection status		L	L	H	Block base address	L	H	L	X	X	01h[4]	0001h[4]
											00h[5]	0000h[5]

Notes:
1. H = Logic level high (V_{IH}); L = Logic level low (V_{IL}); X = HIGH or LOW.
2. Micron-prelocked (permanent).
3. Customer-lockable (default).
4. Protected: 01h (in x8 mode) is output on DQ[7:0].
5. Unprotected: 00h (in x8 mode) is output on DQ[7:0].

Micron Technology, Inc. reserves the right to change products or specifications without notice.
© 2012 Micron Technology, Inc. All rights reserved.

Downloaded from Arrow.com.

Bypass Operations

UNLOCK BYPASS Command

The UNLOCK BYPASS (20h) command is used to place the device in unlock bypass mode. Three bus WRITE operations are required to issue the UNLOCK BYPASS command.

When the device enters unlock bypass mode, the two initial UNLOCK cycles required for a standard PROGRAM or ERASE operation are not needed, thus enabling faster total program or erase time.

The UNLOCK BYPASS command is used in conjunction with UNLOCK BYPASS PROGRAM or UNLOCK BYPASS ERASE commands to program or erase the device faster than with standard PROGRAM or ERASE commands. When the cycle time to the device is long, considerable time savings can be gained by using these commands. When in unlock bypass mode, only the following commands are valid:

- The UNLOCK BYPASS PROGRAM command can be issued to program addresses within the device.
- The UNLOCK BYPASS BLOCK ERASE command can then be issued to erase one or more memory blocks.
- The UNLOCK BYPASS CHIP ERASE command can be issued to erase the whole memory array.
- The UNLOCK BYPASS WRITE TO BUFFER PROGRAM command can be issued to speed up the programming operation.
- The UNLOCK BYPASS RESET command can be issued to return the device to read mode.

In unlock bypass mode, the device can be read as if in read mode.

In addition to the UNLOCK BYPASS command, when V_{PP}/WP# is raised to V_{PPH}, the device automatically enters unlock bypass mode. When V_{PP}/WP# returns to V_{IH} or V_{IL}, the device is no longer in unlock bypass mode and normal operation resumes. The transitions from V_{IH} to V_{PPH} and from V_{PPH} to V_{IH} must be slower than ^{t}VHVPP (see the Accelerated Program, Data Polling/Toggle AC Characteristics).

Note: Micron recommends the user enter and exit unlock bypass mode using ENTER UNLOCK BYPASS and UNLOCK BYPASS RESET commands rather than raising V_{PP}/WP# to V_{PPH}. V_{PP}/WP# should never be raised to V_{PPH} from any mode except read mode; otherwise, the device may be left in an indeterminate state. V_{PP}/WP# must not remain at V_{HH} for more than 80 hours cumulative.

UNLOCK BYPASS RESET Command

The UNLOCK BYPASS RESET (90/00h) command is used to return to read/reset mode from unlock bypass mode. Two bus WRITE operations are required to issue the UNLOCK BYPASS RESET command. The READ/RESET command does not exit from unlock bypass mode.

Micron Technology, Inc. reserves the right to change products or specifications without notice.
© 2012 Micron Technology, Inc. All rights reserved.

Downloaded from Arrow.com.

Program Operations

PROGRAM Command

The PROGRAM (A0h) command can be used to program a value to one address in the memory array. The command requires four bus WRITE operations, and the final WRITE operation latches the address and data in the internal state machine and starts the program/erase controller. After programming has started, bus READ operations output the data polling register content.

Programming can be suspended and then resumed by issuing a PROGRAM SUSPEND command and a PROGRAM RESUME command, respectively.

If the address falls in a protected block, the PROGRAM command is ignored, and the data remains unchanged. The data polling register is not read, and no error condition is given.

After the PROGRAM operation has completed, the device returns to read mode, unless an error has occurred. When an error occurs, bus READ operations to the device continue to output the data polling register. A READ/RESET command must be issued to reset the error condition and return the device to read mode.

The PROGRAM command cannot change a bit set to 0 back to 1, and an attempt to do so is masked during a PROGRAM operation. Instead, an ERASE command must be used to set all bits in one memory block or in the entire memory from 0 to 1.

The PROGRAM operation is aborted by performing a hardware reset or by powering down the device. In this case, data integrity cannot be ensured, and it is recommended that the words or bytes that were aborted be reprogrammed.

UNLOCK BYPASS PROGRAM Command

When the device is in unlock bypass mode, the UNLOCK BYPASS PROGRAM (A0h) command can be used to program one address in the memory array. The command requires two bus WRITE operations instead of four required by a standard PROGRAM command; the final WRITE operation latches the address and data and starts the program/erase controller (The standard PROGRAM command requires four bus WRITE operations). The PROGRAM operation using the UNLOCK BYPASS PROGRAM command behaves identically to the PROGRAM operation using the PROGRAM command. The operation cannot be aborted. A bus READ operation to the memory outputs the data polling register.

WRITE TO BUFFER PROGRAM Command

The WRITE TO BUFFER PROGRAM (25h) command makes use of the program buffer to speed up programming and dramatically reduces system programming time compared to the standard non-buffered PROGRAM command. 256Mb through 2Gb devices support a 512-word maximum program buffer.

When issuing a WRITE TO BUFFER PROGRAM command, V_{PP}/WP# can be held HIGH or raised to V_{PPH}. Also, it can be held LOW if the block is not the lowest or highest block, depending on the part number.

The following successive steps are required to issue the WRITE TO BUFFER PROGRAM command:

Micron Technology, Inc. reserves the right to change products or specifications without notice.
© 2012 Micron Technology, Inc. All rights reserved.

Downloaded from Arrow.com.

First, two UNLOCK cycles are issued. Next, a third bus WRITE cycle sets up the WRITE TO BUFFER PROGRAM command. The set-up code can be addressed to any location within the targeted block. Then, a fourth bus WRITE cycle sets up the number of words/bytes to be programmed. Value *n* is written to the same block address, where *n + 1* is the number of words/bytes to be programmed. Value *n + 1* must not exceed the size of the program buffer, or the operation will abort. A fifth cycle loads the first address and data to be programmed. Last, *n* bus WRITE cycles load the address and data for each word/byte into the program buffer. Addresses must lie within the range from *the start address +1* to *the start address + (n - 1)*.

Optimum programming performance and lower power usage are achieved by aligning the starting address at the beginning of a 512-word boundary (A[8:0] = 0x000h). Any buffer size smaller than 512 words is allowed within a 512-word boundary, while all addresses used in the operation must lie within the 512-word boundary. In addition, any crossing boundary buffer program will result in a program abort. For a x8 device, maximum buffer size is 256 bytes; for a x16 device, the maximum buffer size is 1024 bytes.

To program the content of the program buffer, this command must be followed by a WRITE TO BUFFER PROGRAM CONFIRM command.

If an address is written several times during a WRITE TO BUFFER PROGRAM operation, the address/data counter will be decremented at each data load operation, and the data will be programmed to the last word loaded into the buffer.

Invalid address combinations or the incorrect sequence of bus WRITE cycles will abort the WRITE TO BUFFER PROGRAM command.

The data polling register bits DQ1, DQ5, DQ6, DQ7 can be used to monitor the device status during a WRITE TO BUFFER PROGRAM operation.

The WRITE TO BUFFER PROGRAM command should not be used to change a bit set to 0 back to 1, and an attempt to do so is masked during the operation. Rather than the WRITE TO BUFFER PROGRAM command, the ERASE command should be used to set memory bits from 0 to 1.

Figure 10: Boundary Condition of Program Buffer Size

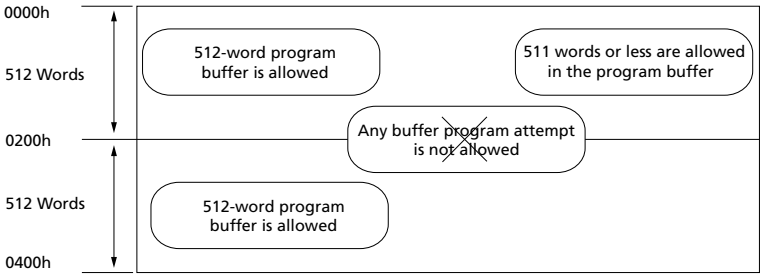

Micron Technology, Inc. reserves the right to change products or specifications without notice.
© 2012 Micron Technology, Inc. All rights reserved.

Downloaded from Arrow.com.

Figure 11: WRITE TO BUFFER PROGRAM Flowchart

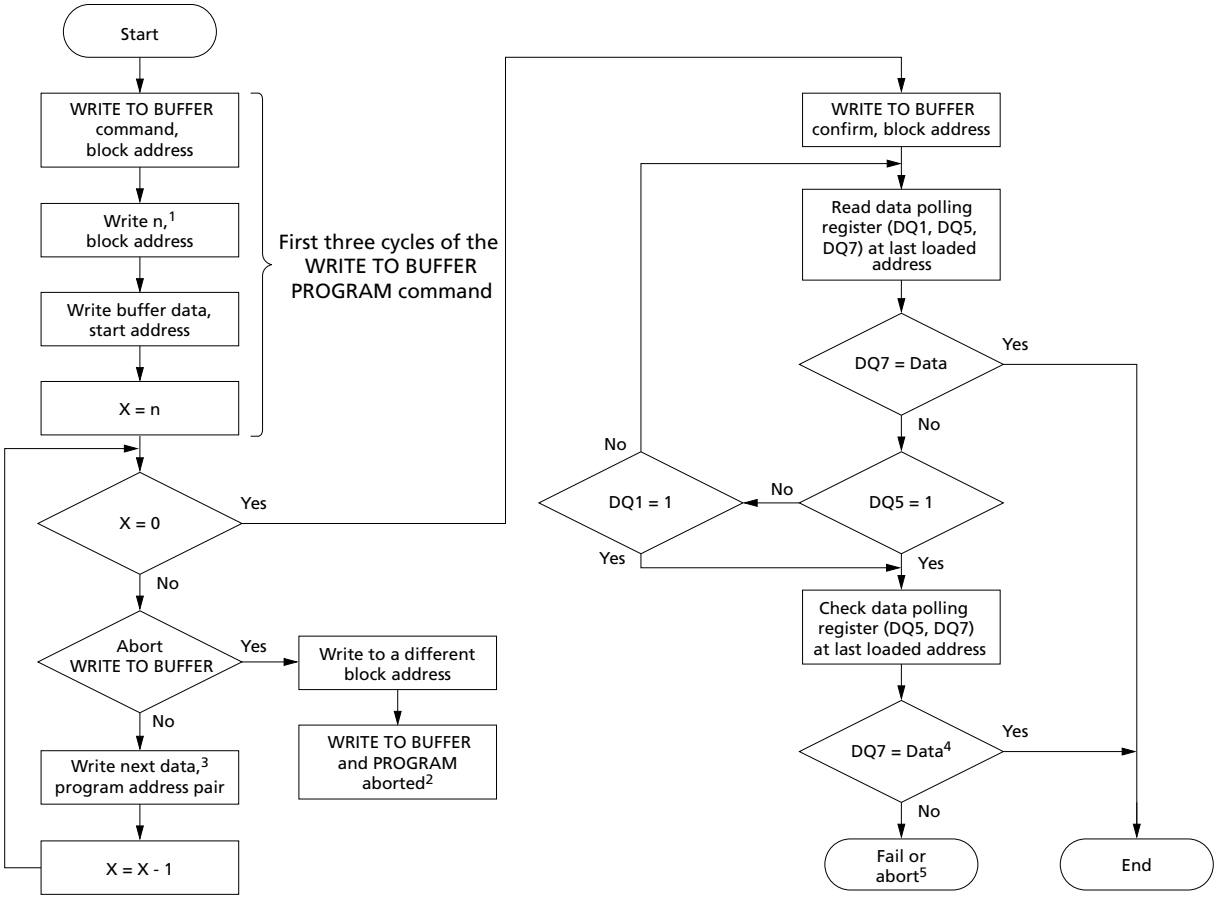

Notes:
1. *n + 1* is the number of addresses to be programmed.
2. The BUFFERED PROGRAM ABORT and RESET command must be issued to return the device to read mode.
3. When the block address is specified, any address in the selected block address space is acceptable. However, when loading program buffer address with data, all addresses must fall within the selected program buffer page.
4. DQ7 must be checked because DQ5 and DQ7 may change simultaneously.
5. If this flowchart location is reached because DQ5 = 1, then the WRITE TO BUFFER PROGRAM command failed. If this flowchart location is reached because DQ1 = 1, then the WRITE TO BUFFER PROGRAM command aborted. In both cases, the appropriate RESET command must be issued to return the device to read mode: A RESET command if the operation failed; a WRITE TO BUFFER PROGRAM ABORT AND RESET command if the operation aborted.
6. See the Standard Command Definitions – Address-Data Cycles, 8-Bit and 16-Bit table for details about the WRITE TO BUFFER PROGRAM command sequence.

UNLOCK BYPASS WRITE TO BUFFER PROGRAM Command

When the device is in unlock bypass mode, the UNLOCK BYPASS WRITE TO BUFFER (25h) command can be used to program the device in fast program mode. The com-

Micron Technology, Inc. reserves the right to change products or specifications without notice.
© 2012 Micron Technology, Inc. All rights reserved.

Downloaded from Arrow.com.

mand requires two bus WRITE operations fewer than the standard WRITE TO BUFFER PROGRAM command.

The UNLOCK BYPASS WRITE TO BUFFER PROGRAM command behaves the same way as the WRITE TO BUFFER PROGRAM command: the operation cannot be aborted, and a bus READ operation to the memory outputs the data polling register.

The WRITE TO BUFFER PROGRAM CONFIRM command is used to confirm an UNLOCK BYPASS WRITE TO BUFFER PROGRAM command and to program the $n + 1$ words/bytes loaded in the program buffer by this command.

WRITE TO BUFFER PROGRAM CONFIRM Command

The WRITE TO BUFFER PROGRAM CONFIRM (29h) command is used to confirm a WRITE TO BUFFER PROGRAM command and to program the $n + 1$ words/bytes loaded in the program buffer by this command.

BUFFERED PROGRAM ABORT AND RESET Command

A BUFFERED PROGRAM ABORT AND RESET (F0h) command must be issued to reset the device to read mode when the BUFFER PROGRAM operation is aborted. The buffer programming sequence can be aborted in the following ways:

- Load a value that is greater than the page buffer size during the number of locations to program in the WRITE TO BUFFER PROGRAM command.
- Write to an address in a different block than the one specified during the WRITE BUFFER LOAD command.
- Write an address/data pair to a different write buffer page than the one selected by the starting address during the program buffer data loading stage of the operation.
- Write data other than the CONFIRM command after the specified number of data load cycles.

The abort condition is indicated by DQ1 = 1, DQ7 = DQ7# (for the last address location loaded), DQ6 = toggle, and DQ5 = 0 (all of which are data polling register bits). A BUFFERED PROGRAM ABORT and RESET command sequence must be written to reset the device for the next operation.

Note: The full three-cycle BUFFERED PROGRAM ABORT and RESET command sequence is required when using buffer programming features in unlock bypass mode.

PROGRAM SUSPEND Command

The PROGRAM SUSPEND (B0h) command can be used to interrupt a program operation so that data can be read from another block. When the PROGRAM SUSPEND command is issued during a program operation, the device suspends the operation within the program suspend latency time and updates the data polling register bits.

After the program operation has been suspended, data can be read from any address. However, data is invalid when read from an address where a program operation has been suspended.

The PROGRAM SUSPEND command may also be issued during a PROGRAM operation while an erase is suspended. In this case, data may be read from any address not in erase suspend or program suspend mode. To read from the extended memory block

Micron Technology, Inc. reserves the right to change products or specifications without notice.
© 2012 Micron Technology, Inc. All rights reserved.

Downloaded from Arrow.com.

area (one-time programmable area), the ENTER/EXIT EXTENDED MEMORY BLOCK command sequences must be issued.

The system may also issue the AUTO SELECT command sequence when the device is in program suspend mode. The system can read as many auto select codes as required. When the device exits auto select mode, the device reverts to program suspend mode and is ready for another valid operation.

The PROGRAM SUSPEND operation is aborted by performing a device reset or power-down. In this case, data integrity cannot be ensured, and it is recommended that the words or bytes that were aborted be reprogrammed.

PROGRAM RESUME Command

The PROGRAM RESUME (30h) command must be issued to exit a program suspend mode and resume a PROGRAM operation. The controller can use DQ7 or DQ6 data polling bits to determine the status of the PROGRAM operation. After a PROGRAM RESUME command is issued, subsequent PROGRAM RESUME commands are ignored. Another PROGRAM SUSPEND command can be issued after the device has resumed programming.

Erase Operations

CHIP ERASE Command

The CHIP ERASE (80/10h) command erases the entire chip. Six bus WRITE operations are required to issue the command and start the program/erase controller.

Protected blocks are not erased. If all blocks are protected, the data remains unchanged. No error is reported when protected blocks are not erased.

During the CHIP ERASE operation, the device ignores all other commands, including ERASE SUSPEND. It is not possible to abort the operation. All bus READ operations during CHIP ERASE output the data polling register on the data I/Os. See the Data Polling Register section for more details.

After the CHIP ERASE operation completes, the device returns to read mode, unless an error has occurred. If an error occurs, the device will continue to output the data polling register.

When the operation fails, a READ/RESET command must be issued to reset the error condition and return to read mode. The status of the array must be confirmed through the BLANK CHECK operation and the BLOCK ERASE command re-issued to the failed block.

The CHIP ERASE command sets all of the bits in unprotected blocks of the device to 1. All previous data is lost.

The operation is aborted by performing a reset or by powering down the device. In this case, data integrity cannot be ensured, and it is recommended that the entire chip be erased again.

UNLOCK BYPASS CHIP ERASE Command

When the device is in unlock bypass mode, the UNLOCK BYPASS CHIP ERASE (80/10h) command can be used to erase all memory blocks at one time. The command requires

Micron Technology, Inc. reserves the right to change products or specifications without notice.
© 2012 Micron Technology, Inc. All rights reserved.

Downloaded from Arrow.com.

only two bus WRITE operations instead of six using the standard CHIP ERASE command. The final bus WRITE operation starts the program/erase controller.

The UNLOCK BYPASS CHIP ERASE command behaves the same way as the CHIP ERASE command: the operation cannot be aborted, and a bus READ operation to the memory outputs the data polling register.

BLOCK ERASE Command

The BLOCK ERASE (80/30h) command erases a list of one or more blocks. It sets all bits in the selected, unprotected blocks to 1. All previous, selected, unprotected blocks data in the selected blocks is lost.

Six bus WRITE operations are required to select the first block in the list. Each additional block in the list can be selected by repeating the sixth bus WRITE operation using the address of the additional block. After the command sequence is written, a block erase timeout occurs.

During the period specified by the block erase timeout parameter, additional block addresses and BLOCK ERASE commands can be written. Any command except BLOCK ERASE or ERASE SUSPEND during this timeout period resets that block to the read mode. The system can monitor DQ3 to determine if the block erase timer has timed out.

After the program/erase controller has started, it is not possible to select any more blocks. Each additional block must therefore be selected within the timeout period of the last block. The timeout timer restarts when an additional block is selected. After the sixth bus WRITE operation, a bus READ operation outputs the data polling register. See the WE#-Controlled Program waveforms for details on how to identify if the program/erase controller has started the BLOCK ERASE operation.

After the BLOCK ERASE operation completes, the device returns to read mode, unless an error has occurred. If an error occurs, bus READ operations will continue to output the data polling register. A READ/RESET command must be issued to reset the error condition and return to read mode.

If any selected blocks are protected, they are ignored, and all the other selected blocks are erased. If all selected blocks are protected, the data remains unchanged. No error condition is given when protected blocks are not erased.

During the BLOCK ERASE operation, the device ignores all commands except the ERASE SUSPEND command and the READ/RESET command, which is accepted only during the timeout period. The operation is aborted by performing a hardware reset or powering down the device. In this case, data integrity cannot be ensured, and it is recommended that the aborted blocks be erased again.

UNLOCK BYPASS BLOCK ERASE Command

When the device is in unlock bypass mode, the UNLOCK BYPASS BLOCK ERASE (80/30h) command can be used to erase one or more memory blocks at a time. The command requires two bus WRITE operations instead of six using the standard BLOCK ERASE command. The final bus WRITE operation latches the address of the block and starts the program/erase controller.

Micron Technology, Inc. reserves the right to change products or specifications without notice.
© 2012 Micron Technology, Inc. All rights reserved.

Downloaded from Arrow.com.

To erase multiple blocks (after the first two bus WRITE operations have selected the first block in the list), each additional block in the list can be selected by repeating the second bus WRITE operation using the address of the additional block.

Any command except BLOCK ERASE or ERASE SUSPEND during a timeout period resets that block to the read mode. The system can monitor DQ3 to determine if the block erase timer has timed out.

The UNLOCK BYPASS BLOCK ERASE command behaves the same way as the BLOCK ERASE command: the operation cannot be aborted, and a bus READ operation to the memory outputs the data polling register. See the BLOCK ERASE Command section for details.

ERASE SUSPEND Command

The ERASE SUSPEND (B0h) command temporarily suspends a BLOCK ERASE operation. One bus WRITE operation is required to issue the command. The block address is "Don't Care."

The program/erase controller suspends the ERASE operation within the erase suspend latency time of the ERASE SUSPEND command being issued. However, when the ERASE SUSPEND command is written during the block erase timeout, the device immediately terminates the timeout period and suspends the ERASE operation. After the program/erase controller has stopped, the device operates in read mode, and the erase is suspended.

During an ERASE SUSPEND operation, it is possible to execute these operations in arrays that are not suspended:

- READ (main memory array)
- PROGRAM
- WRITE TO BUFFER PROGRAM
- AUTO SELECT
- READ CFI
- UNLOCK BYPASS
- Extended memory block commands
- READ/RESET

Reading from a suspended block will output the data polling register. If an attempt is made to program in a protected or suspended block, the PROGRAM command is ignored and the data remains unchanged; also, the data polling register is not read and no error condition is given.

Before the RESUME command is initiated, the READ/RESET command must to issued to exit AUTO SELECT and READ CFI operations. In addition, the EXIT UNLOCK BYPASS and EXIT EXTENDED MEMORY BLOCK commands must be issued to exit unlock bypass and the extended memory block modes.

An ERASE SUSPEND command is ignored if it is written during a CHIP ERASE operation.

If the ERASE SUSPEND operation is aborted by performing a device hardware reset or power-down, data integrity cannot be ensured, and it is recommended that the suspended blocks be erased again.

Micron Technology, Inc. reserves the right to change products or specifications without notice.
© 2012 Micron Technology, Inc. All rights reserved.

Downloaded from Arrow.com.

ERASE RESUME Command

The ERASE RESUME (30h) command restarts the program/erase controller after an ERASE SUSPEND operation.

The device must be in read array mode before the RESUME command will be accepted. An erase can be suspended and resumed more than once.

BLANK CHECK Operation

BLANK CHECK Commands

Two commands are required to execute a BLANK CHECK operation: BLANK CHECK SETUP (EB/76h) and BLANK CHECK CONFIRM AND READ (29h).

The BLANK CHECK operation determines whether a specified block is blank (that is, completely erased). It can also be used to determine whether a previous ERASE operation was successful, including ERASE operations that might have been interrupted by power loss.

The BLANK CHECK operation checks for cells that are programmed or over-erased. If it finds any, it returns a failure status, indicating that the block is not blank. If it returns a passing status, the block is guaranteed blank (all 1s) and is ready to program.

Before executing, the ERASE operation initiates an embedded BLANK CHECK operation, and if the target block is blank, the ERASE operation is skipped, benefitting overall cycle performance; otherwise, the ERASE operation continues.

The BLANK CHECK operation can occur in only one block at a time, and during its execution, reading the data polling register is the only other operation allowed. Reading from any address in the device enables reading the data polling register to monitor blank check progress or errors. Operations such as READ (array data), PROGRAM, ERASE, and any suspended operation are not allowed.

After the BLANK CHECK operation has completed, the device returns to read mode unless an error has occurred. When an error occurs, the device continues to output data polling register data. A READ/RESET command must be issued to reset the error condition and return the device to read mode.

Micron Technology, Inc. reserves the right to change products or specifications without notice.
© 2012 Micron Technology, Inc. All rights reserved.

Downloaded from Arrow.com.

Block Protection Command Definitions – Address-Data Cycles

Table 13: Block Protection Command Definitions – Address-Data Cycles, 8-Bit and 16-Bit

Notes 1 and 2 apply to entire table

Command and Code/Subcode	Bus Size	Address and Data Cycles											Notes
		1st		2nd		3rd		4th			*n*th		
		A	D	A	D	A	D	A	D	…	A	D	
LOCK REGISTER Commands													
ENTER LOCK REGISTER COMMAND SET (40h)	x8	AAA	AA	555	55	AAA	40						3
	x16	555	AA	2AA	55	555							
PROGRAM LOCK REGISTER (A0h)	x8	X	A0	X	Data								5
	x16												
READ LOCK REGISTER	x8	X	Data										4, 5, 6
	x16												
EXIT LOCK REGISTER (90h/00h)	x8	X	90	X	00								3
	x16												
PASSWORD PROTECTION Commands													
ENTER PASSWORD PROTECTION COMMAND SET (60h)	x8	AAA	AA	555	55	AAA	60						3
	x16	555	AA	2AA	55	555							
PROGRAM PASSWORD (A0h)	x8	X	A0	PWAn	PWDn								7
	x16												
READ PASSWORD	x8	00	PWD0	01	PWD1	02	PWD2	03	PWD3	…	07	PWD 7	4, 6, 8, 9
	x16	00	PWD0	01	PWD1	02	PWD2	03	PWD3				
UNLOCK PASSWORD (25h/03h)	x8	00	25	00	03	00	PWD0	01	PWD1	…	00	29	8, 10
	x16												
EXIT PASSWORD PROTECTION (90h/00h)	x8	X	90	X	00								3
	x16												
NONVOLATILE PROTECTION Commands													
ENTER NONVOLATILE PROTECTION COMMAND SET (C0h)	x8	AAA	AA	555	55	AAA	C0						3
	x16	555	AA	2AA	55	555							
PROGRAM NONVOLATILE PROTECTION BIT (A0h)	x8	X	A0	BAd	00								11
	x16												
READ NONVOLATILE PROTECTION BIT STATUS	x8	BAd	READ (DQ0)										4, 6, 11
	x16												
CLEAR ALL NONVOLATILE PROTECTION BITS (80h/30h)	x8	X	80	00	30								12
	x16												

Micron Technology, Inc. reserves the right to change products or specifications without notice.
© 2012 Micron Technology, Inc. All rights reserved.

Downloaded from Arrow.com.

Table 13: Block Protection Command Definitions – Address-Data Cycles, 8-Bit and 16-Bit (Continued)

Notes 1 and 2 apply to entire table

Command and Code/Subcode	Bus Size	Address and Data Cycles											Notes
		1st		2nd		3rd		4th			*n*th		
		A	D	A	D	A	D	A	D	...	A	D	
EXIT NONVOLATILE PROTECTION (90h/00h)	x8	X	90	X	00								3
	x16												
NONVOLATILE PROTECTION BIT LOCK BIT Commands													
ENTER NONVOLATILE PROTECTION BIT LOCK BIT COMMAND SET (50h)	x8	AAA	AA	555	55	AAA	50						3
	x16	555	AA	2AA	55	555							
PROGRAM NONVOLATILE PROTECTION BIT LOCK BIT (A0h)	x8	X	A0	X	00								11
	x16												
READ NONVOLATILE PROTECTION BIT LOCK BIT STATUS	x8	X	READ (DQ0)										4, 6, 11
	x16												
EXIT NONVOLATILE PROTECTION BIT LOCK BIT (90h/00h)	x8	X	90	X	00								3
	x16												
VOLATILE PROTECTION Commands													
ENTER VOLATILE PROTECTION COMMAND SET (E0h)	x8	AAA	AA	555	55	AAA	E0						3
	x16	555	AA	2AA	55	555							
PROGRAM VOLATILE PROTECTION BIT (A0h)	x8	X	A0	BAd	00								11
	x16												
READ VOLATILE PROTECTION BIT STATUS	x8	BAd	READ (DQ0)										4, 6
	x16												
CLEAR VOLATILE PROTECTION BIT (A0h)	x8	X	A0	BAd	01								11
	x16												
EXIT VOLATILE PROTECTION (90h/00h)	x8	X	90	X	00								3
	x16												
EXTENDED MEMORY BLOCK Operations													
ENTER EXTENDED MEMORY BLOCK (88h)	x8	AAA	AA	555	55	AAA	88						
	x16	555		2AA		555							
PROGRAM EXTENDED MEMORY BLOCK (A0h)	x8	AAA	AA	555	55	AAA	A0	Word address	data				
	x16	555		2AA		555							
READ EXTENDED MEMORY BLOCK	x8	Word address	data										
	x16												

Micron Technology, Inc. reserves the right to change products or specifications without notice.
© 2012 Micron Technology, Inc. All rights reserved.

Downloaded from Arrow.com.

Table 13: Block Protection Command Definitions – Address-Data Cycles, 8-Bit and 16-Bit (Continued)

Notes 1 and 2 apply to entire table

Command and Code/Subcode	Bus Size	Address and Data Cycles											Notes
		1st		2nd		3rd		4th			*n*th		
		A	D	A	D	A	D	A	D	...	A	D	
EXIT EXTENDED MEMORY BLOCK (90h/00h)	x8	AAA	AA	555	55	555	90	X	00				
	x16	555		2AA									

Notes:
1. Key: A = Address and D = Data; X = "Don't Care;" BAd = Any address in the block; PWDn = Password bytes, n = 0 to 7 (×8)/words 0 to 3 (×16); PWAn = Password address, n = 0 to 7 (×8)/0 to 3 (×16); PWDn = Password words, n = 0 to 3 (×16); PWAn = Password address, n = 0 to 3(×16);Gray = Not applicable. All values in the table are hexadecimal.
2. DQ[15:8] are "Don't Care" during UNLOCK and COMMAND cycles. A[MAX:16] are "Don't Care" during UNLOCK and COMMAND cycles, unless an address is required.
3. The ENTER command sequence must be issued prior to any operation. It disables READ and WRITE operations from and to block 0. READ and WRITE operations from and to any other block are allowed. Also, when an ENTER COMMAND SET command is issued, an EXIT COMMAND SET command must be issued to return the device to READ mode.
4. READ REGISTER/PASSWORD commands have no command code; CE# and OE# are driven LOW and data is read according to a specified address.
5. Data = Lock register content.
6. All address cycles shown for this command are READ cycles.
7. Only one portion of the password can be programmed or read by each PROGRAM PASSWORD command.
8. Each portion of the password can be entered or read in any order as long as the entire 64-bit password is entered or read.
9. For the x8 READ PASSWORD command, the *n*th (and final) address cycle equals the 8th address cycle. From the 5th to the 8th address cycle, the values for each address and data pair continue the pattern shown in the table as follows: for x8, address and data = 04 and PWD4; 05 and PWD5; 06 and PWD6; 07 and PWD7.
10. For the x8 UNLOCK PASSWORD command, the *n*th (and final) address cycle equals the 11th address cycle. From the 5th to the 10th address cycle, the values for each address and data pair continue the pattern shown in the table as follows: address and data = 02 and PWD2; 03 and PWD3; 04 and PWD4; 05 and PWD5; 06 and PWD6; 07 and PWD7.

    For the x16 UNLOCK PASSWORD command, the *n*th (and final) address cycle equals the 7th address cycle. For the 5th and 6th address cycles, the values for the address and data pair continue the pattern shown in the table as follows: address and data = 02 and PWD2; 03 and PWD3.
11. Both nonvolatile and volatile protection bit settings are as follows: Protected state = 00; Unprotected state = 01.
12. The CLEAR ALL NONVOLATILE PROTECTION BITS command programs all nonvolatile protection bits before erasure. This prevents over-erasure of previously cleared nonvolatile protection bits.

Micron Technology, Inc. reserves the right to change products or specifications without notice.
© 2012 Micron Technology, Inc. All rights reserved.

Downloaded from Arrow.com.

Protection Operations

Blocks can be protected individually against accidental PROGRAM, or ERASE operations on both 8-bit and 16-bit configurations. The block protection scheme is shown in the Software Protection Scheme figure.

Memory block and extended memory block protection is configured through the lock register (see Lock Register section).

LOCK REGISTER Commands

After the ENTER LOCK REGISTER COMMAND SET (40h) command has been issued, all bus READ or PROGRAM operations can be issued to the lock register.

The PROGRAM LOCK REGISTER (A0h) command allows the lock register to be configured. The programmed data can then be checked with a READ LOCK REGISTER command by driving CE# and OE# LOW with the appropriate address data on the address bus.

PASSWORD PROTECTION Commands

After the ENTER PASSWORD PROTECTION COMMAND SET (60h) command has been issued, the commands related to password protection mode can be issued to the device.

The PROGRAM PASSWORD (A0h) command is used to program the 64-bit password used in the password protection mode. To program the 64-bit password, the complete command sequence must be entered eight times at eight consecutive addresses selected by A[1:0] plus DQ15/A-1 in 8-bit mode, or four times at four consecutive addresses selected by A[1:0] in 16-bit mode. By default, all password bits are set to 1. The password can be checked by issuing a READ PASSWORD command.

Note: To use the password protection feature on the 2Gb device, the password must be programmed to both upper die and lower die.

The READ PASSWORD command is used to verify the password used in password protection mode. To verify the 64-bit password, the complete command sequence must be entered eight times at eight consecutive addresses selected by A[1:0] plus DQ15/A-1 in 8-bit mode, or four times at four consecutive addresses selected by A[1:0] in 16-bit mode. If the password mode lock bit is programmed and the user attempts to read the password, the device will output FFh onto the I/O data bus.

The UNLOCK PASSWORD (25/03h) command is used to clear the nonvolatile protection bit lock bit, allowing the nonvolatile protection bits to be modified. The UNLOCK PASSWORD command must be issued, along with the correct password, and requires a 1µs delay between successive UNLOCK PASSWORD commands in order to prevent hackers from cracking the password by trying all possible 64-bit combinations. If this delay does not occur, the latest command will be ignored. Approximately 1µs is required for unlocking the device after the valid 64-bit password has been provided.

NONVOLATILE PROTECTION Commands

After the ENTER NONVOLATILE PROTECTION COMMAND SET (C0h) command has been issued, the commands related to nonvolatile protection mode can be issued to the device.

Micron Technology, Inc. reserves the right to change products or specifications without notice.
© 2012 Micron Technology, Inc. All rights reserved.

Downloaded from Arrow.com.

A block can be protected from program or erase by issuing a PROGRAM NONVOLATILE PROTECTION BIT (A0h) command, along with the block address. This command sets the nonvolatile protection bit to 0 for a given block.

The status of a nonvolatile protection bit for a given block or group of blocks can be read by issuing a READ NONVOLATILE MODIFY PROTECTION BIT command, along with the block address.

The nonvolatile protection bits are erased simultaneously by issuing a CLEAR ALL NONVOLATILE PROTECTION BITS (80/30h) command. No specific block address is required. If the nonvolatile protection bit lock bit is set to 0, the command fails.

Micron Technology, Inc. reserves the right to change products or specifications without notice.
© 2012 Micron Technology, Inc. All rights reserved.

Downloaded from Arrow.com.

Figure 12: Set/Clear Nonvolatile Protection Bit Algorithm Flowchart

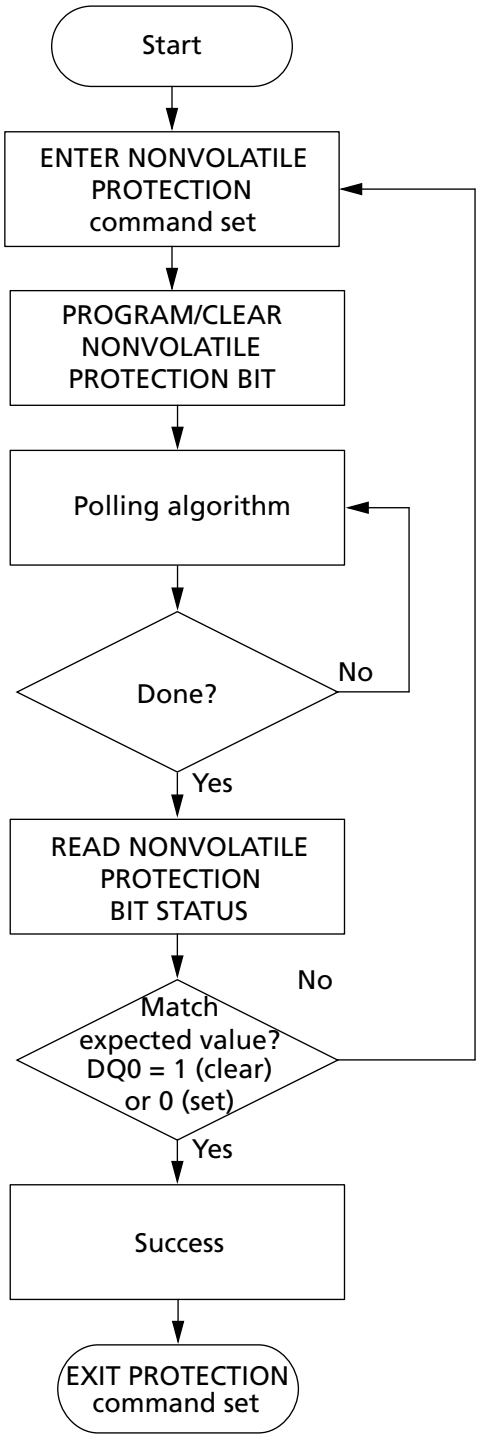

Micron Technology, Inc. reserves the right to change products or specifications without notice.
© 2012 Micron Technology, Inc. All rights reserved.

Downloaded from Arrow.com.

NONVOLATILE PROTECTION BIT LOCK BIT Commands

After the ENTER NONVOLATILE PROTECTION BIT LOCK BIT COMMAND SET (50h) command has been issued, the commands that allow the nonvolatile protection bit lock bit to be set can be issued to the device.

The PROGRAM NONVOLATILE PROTECTION BIT LOCK BIT (A0h) command is used to set the nonvolatile protection bit lock bit to 0, thus locking the nonvolatile protection bits and preventing them from being modified.

The READ NONVOLATILE PROTECTION BIT LOCK BIT STATUS command is used to read the status of the nonvolatile protection bit lock bit.

VOLATILE PROTECTION Commands

After the ENTER VOLATILE PROTECTION COMMAND SET (E0h) command has been issued, commands related to the volatile protection mode can be issued to the device.

The PROGRAM VOLATILE PROTECTION BIT (A0h) command individually sets a volatile protection bit to 0 for a given block. If the nonvolatile protection bit for the same block is set, the block is locked regardless of the value of the volatile protection bit. (See the Block Protection Status table.)

The status of a volatile protection bit for a given block can be read by issuing a READ VOLATILE PROTECTION BIT STATUS command along with the block address.

The CLEAR VOLATILE PROTECTION BIT (A0h) command individually clears (sets to 1) the volatile protection bit for a given block. If the nonvolatile protection bit for the same block is set, the block is locked regardless of the value of the volatile protection bit. (See the Block Protection Status table.)

EXTENDED MEMORY BLOCK Commands

The device has one extra 128-word extended memory block that can be accessed only by the ENTER EXTENDED MEMORY BLOCK (88h) command. The extended memory block is 128 words (x16) or 256 bytes (x8). It is used as a security block to provide a permanent 128-bit security identification number or to store additional information. The device can be shipped with the extended memory block prelocked permanently by Micron, including the 128-bit security identification number. Or, the device can be shipped with the extended memory block unlocked, enabling customers to permanently program and lock it. (See Lock Register, the AUTO SELECT command, and the Block Protection table.)

Table 14: Extended Memory Block Address and Data

Address			Data	
x8	x16	Micron prelocked	Customer Lockable	
000000h–00000Fh	000000h–000007h	Secure ID number	Determined by customer	Secure ID number
000010h–0000FFh	000008h–00007Fh	Protected and unavailable		Determined by customer

After the ENTER EXTENDED MEMORY BLOCK command has been issued, the device enters the extended memory block mode. All bus READ or PROGRAM operations are conducted on the extended memory block, and the extended memory block is ad-

Micron Technology, Inc. reserves the right to change products or specifications without notice.
© 2012 Micron Technology, Inc. All rights reserved.

Downloaded from Arrow.com.

dressed using the addresses occupied by block 0 in the other operating modes (see the Memory Map table).

In extended memory block mode, ERASE, CHIP ERASE, ERASE SUSPEND, and ERASE RESUME commands are not allowed. The extended memory block cannot be erased, and each bit of the extended memory block can only be programmed once.

The extended memory block is protected from further modification by programming lock register bit 0. Once invoked, this protection cannot be undone.

The device remains in extended memory block mode until the EXIT EXTENDED MEMORY BLOCK (90/00h) command is issued, which returns the device to read mode, or until power is removed from the device. After a power-up sequence or hardware reset, the device will revert to reading memory blocks in the main array.

EXIT PROTECTION Command

The EXIT PROTECTION COMMAND SET (90/00h) command is used to exit the lock register, password protection, nonvolatile protection, volatile protection, and nonvolatile protection bit lock bit command set modes and return the device to read mode.

Micron Technology, Inc. reserves the right to change products or specifications without notice.
© 2012 Micron Technology, Inc. All rights reserved.

Downloaded from Arrow.com.

Device Protection

Hardware Protection

The V_{PP}/WP# function provides a hardware method of protecting either the highest/lowest block. When V_{PP}/WP# is LOW, PROGRAM and ERASE operations on either of these block options is ignored to provide protection. When V_{PP}/WP# is HIGH, the device reverts to the previous protection status for the highest/lowest block. PROGRAM and ERASE operations can modify the data in either of these block options unless block protection is enabled.

Note: Micron highly recommends driving V_{PP}/WP# HIGH or LOW. If a system needs to float the V_{PP}/WP# pin, without a pull-up/pull-down resistor and no capacitor, then an internal pull-up resistor is enabled.

Table 15: V_{PP}/WP# Functions

V_{PP}/WP# Settings	Function
V_{IL}	Highest/lowest block is protected; for a 2Gb device, both the highest and the lowest blocks are hardware-protected (block 0 and block 2047)
V_{IH}	Highest/lowest block or the top/bottom two blocks are unprotected unless software protection is activated.

Software Protection

Four software protection modes are available:

- Volatile protection
- Nonvolatile protection
- Password protection
- Password access

The device is shipped with all blocks unprotected. On first use, the device defaults to the nonvolatile protection mode but can be activated in either the nonvolatile protection or password protection mode.

The desired protection mode is activated by setting either the nonvolatile protection mode lock bit or the password protection mode lock bit of the lock register (see the Lock Register section). Both bits are one-time-programmable and nonvolatile; therefore, after the protection mode has been activated, it cannot be changed, and the device is set permanently to operate in the selected protection mode. It is recommended that the desired software protection mode be activated when first programming the device.

For the lowest and highest blocks, a higher level of block protection can be achieved by locking the blocks using nonvolatile protection mode and holding V_{PP} /WP# LOW.

Blocks with volatile protection and nonvolatile protection can coexist within the memory array. If the user attempts to program or erase a protected block, the device ignores the command and returns to read mode.

The block protection status can be read by performing a read electronic signature or by issuing an AUTO SELECT command (see the Block Protection table).

Micron Technology, Inc. reserves the right to change products or specifications without notice.
© 2012 Micron Technology, Inc. All rights reserved.

Downloaded from Arrow.com.

Refer to the Block Protection Status table and the Software Protection Scheme figure for details on the block protection scheme. Refer to the Protection Operations section for a description of the command sets.

Volatile Protection Mode

Volatile protection enables the software application to protect blocks against inadvertent change and can be disabled when changes are needed. Volatile protection bits are unique for each block and can be individually modified. Volatile protection bits control the protection scheme only for unprotected blocks whose nonvolatile protection bits are cleared to 1. Issuing a PROGRAM VOLATILE PROTECTION BIT or CLEAR VOLATILE PROTECTION BIT command sets to 0 or clears to 1 the volatile protection bits and places the associated blocks in the protected (0) or unprotected (1) state, respectively. The volatile protection bit can be set or cleared as often as needed.

When the device is first shipped, or after a power-up or hardware reset, the volatile protection bits default to 1 (unprotected).

Nonvolatile Protection Mode

A nonvolatile protection bit is assigned to each block. Each of these bits can be set for protection individually by issuing a PROGRAM NONVOLATILE PROTECTION BIT command. Also, each device has one global volatile bit called the nonvolatile protection bit lock bit; it can be set to protect all nonvolatile protection bits at once. This global bit must be set to 0 only after all nonvolatile protection bits are configured to the desired settings. When set to 0, the nonvolatile protection bit lock bit prevents changes to the state of the nonvolatile protection bits. When cleared to 1, the nonvolatile protection bits can be set and cleared using the PROGRAM NONVOLATILE PROTECTION BIT and CLEAR ALL NONVOLATILE PROTECTION BITS commands, respectively.

No software command unlocks the nonvolatile protection bit lock bit unless the device is in password protection mode; in nonvolatile protection mode, the nonvolatile protection bit lock bit can be cleared only by taking the device through a hardware reset or power-up.

Nonvolatile protection bits status cannot be changed through a hardware reset or a power-down/power-up sequence. Nonvolatile protection bits cannot be cleared individually; they must be cleared all at once using a CLEAR ALL NONVOLATILE PROTECTION BITS command.

If one of the nonvolatile protection bits needs to be cleared (unprotected), additional steps are required: First, the nonvolatile protection bit lock bit must be cleared to 1, using either a power-cycle or hardware reset. Then, the nonvolatile protection bits can be changed to reflect the desired settings. Finally, the nonvolatile protection bit lock bit must be set to 0 to lock the nonvolatile protection bits. The device now will operate normally.

To achieve the best protection, the PROGRAM NONVOLATILE PROTECTION LOCK BIT command should be executed early in the boot code, and the boot code should be protected by holding V_{PP}/WP# LOW.

Nonvolatile protection bits and volatile protection bits have the same function when V_{PP}/WP# is HIGH or when V_{PP}/WP# is at the voltage for program acceleration (V_{PPH}).

Micron Technology, Inc. reserves the right to change products or specifications without notice.
© 2012 Micron Technology, Inc. All rights reserved.

Downloaded from Arrow.com.

Password Protection Mode

The password protection mode provides a higher level of security than the nonvolatile protection mode by requiring a 64-bit password to unlock the nonvolatile protection bit lock bit. In addition to this password requirement, the nonvolatile protection bit lock bit is set to 0 after power-up and reset to maintain the device in password protection mode.

Executing the UNLOCK PASSWORD command by entering the correct password clears the nonvolatile protection bit lock bit, enabling the block nonvolatile protection bits to be modified. If the password provided is incorrect, the nonvolatile protection bit lock bit remains locked, and the state of the nonvolatile protection bits cannot be modified.

To place the device in password protection mode, the following two steps are required: First, before activating the password protection mode, a 64-bit password must be set and the setting verified. Password verification is allowed only before the password protection mode is activated. Next, password protection mode is activated by programming the password protection mode lock bit to 0. This operation is irreversible. After the bit is programmed, it cannot be erased, the device remains permanently in password protection mode, and the 64-bit password can be neither retrieved nor reprogrammed. In addition, all commands to the address where the password is stored are disabled.

Note: There is no means to verify the password after password protection mode is enabled. If the password is lost after enabling the password protection mode, there is no way to clear the nonvolatile protection bit lock bit.

Password Access

Password access is a security enhancement that protects information stored in the main array blocks by preventing content alteration or reads until a valid 64-bit password is received. Password access may be combined with nonvolatile and/or volatile protection to create a multi-tiered solution. Contact your Micron sales representative for further details.

Figure 13: Software Protection Scheme

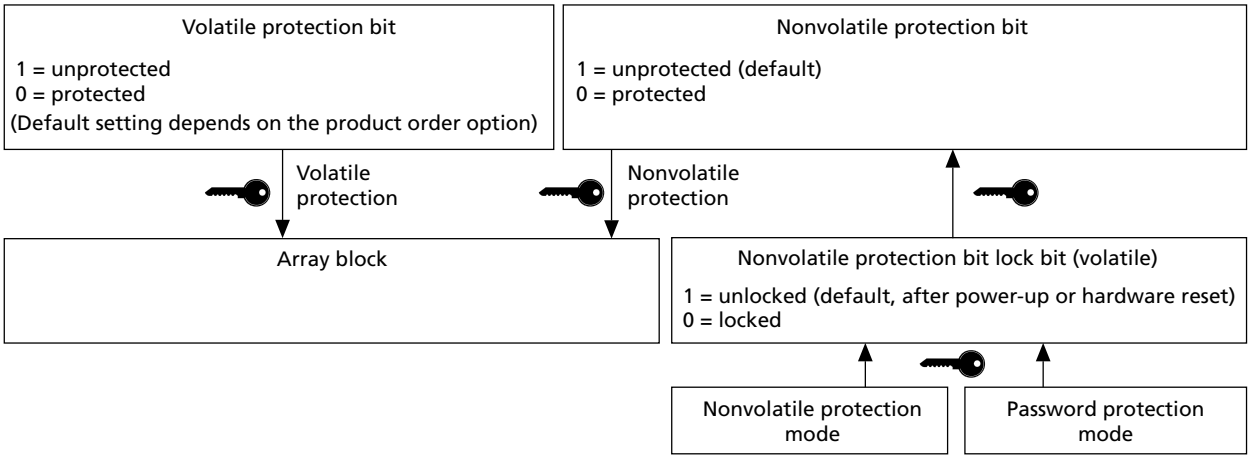

Notes: 1. Volatile protection bits are programmed and cleared individually. Nonvolatile protection bits are programmed individually and cleared collectively.

Micron Technology, Inc. reserves the right to change products or specifications without notice.
© 2012 Micron Technology, Inc. All rights reserved.

Downloaded from Arrow.com.

2. Once programmed to 0, the nonvolatile protection bit lock bit can be reset to 1 only by taking the device through a power-up or hardware reset.

Table 16: Block Protection Status

Nonvolatile Protection Bit Lock Bit *1	Nonvolatile Protection Bit *2	Volatile Protection Bit *3	Block Protection Status *4	Block Protection Status
1	1	1	00h	Block unprotected; nonvolatile protection bit changeable.
1	1	0	01h	Block protected by volatile protection bit; nonvolatile protection bit changeable.
1	0	1	01h	Block protected by nonvolatile protection bit; nonvolatile protection bit changeable.
1	0	0	01h	Block protected by nonvolatile protection bit and volatile protection bit; nonvolatile protection bit changeable.
0	1	1	00h	Block unprotected; nonvolatile protection bit unchangeable.
0	1	0	01h	Block protected by volatile protection bit; nonvolatile protection bit unchangeable.
0	0	1	01h	Block protected by nonvolatile protection bit; nonvolatile protection bit unchangeable.
0	0	0	01h	Block protected by nonvolatile protection bit and volatile protection bit; nonvolatile protection bit unchangeable.

Notes:
1. Nonvolatile protection bit lock bit: when cleared to 1, all nonvolatile protection bits are unlocked; when set to 0, all nonvolatile protection bits are locked.
2. Block nonvolatile protection bit: when cleared to 1, the block is unprotected; when set to 0, the block is protected.
3. Block volatile protection bit: when cleared to 1, the block is unprotected; when set to 0, the block is protected.
4. Block protection status is checked under AUTO SELECT mode.

Micron Technology, Inc. reserves the right to change products or specifications without notice.
© 2012 Micron Technology, Inc. All rights reserved.

Downloaded from Arrow.com.

Common Flash Interface

The common Flash interface (CFI) is a JEDEC-approved, standardized data structure that can be read from the Flash memory device. It allows a system's software to query the device to determine various electrical and timing parameters, density information, and functions supported by the memory. The system can interface easily with the device, enabling the software to upgrade itself when necessary.

When the READ CFI command is issued, the device enters CFI query mode and the data structure is read from memory. The following tables show the addresses (A-1, A[7:0]) used to retrieve the data. The query data is always presented on the lowest order data outputs (DQ[7:0]), and the other data outputs (DQ[15:8]) are set to 0.

Table 17: Query Structure Overview

Note 1 applies to the entire table

Address			
x16	x8	Subsection Name	Description
10h	20h	CFI query identification string	Command set ID and algorithm data offset
1Bh	36h	System interface information	Device timing and voltage information
27h	4Eh	Device geometry definition	Flash device layout
40h	80h	Primary algorithm-specific extended query table	Additional information specific to the primary algorithm (optional)

Note: 1. Query data are always presented on the lowest order data outputs (DQ[7:0]). DQ[15:8] are set to 0.

Table 18: CFI Query Identification String

Note 1 applies to the entire table

Address				
x16	x8	Data	Description	Value
10h	20h	0051h	Query unique ASCII string "QRY"	"Q"
11h	22h	0052h		"R"
12h	24h	0059h		"Y"
13h 14h	26h 28h	0002h 0000h	Primary algorithm command set and control interface ID code 16-bit ID code defining a specific algorithm	–
15h 16h	2Ah 2Ch	0040h 0000h	Address for primary algorithm extended query table (see the Primary Algorithm-Specific Extended Query Table)	P = 40h
17h 18h	2Eh 30h	0000h 0000h	Alternate vendor command set and control interface ID code second vendor-specified algorithm supported	–
19h 1Ah	32h 34h	0000h 0000h	Address for alternate algorithm extended query table	–

Note: 1. Query data are always presented on the lowest order data outputs (DQ[7:0]). DQ[15:8] are set to 0.

Micron Technology, Inc. reserves the right to change products or specifications without notice.
© 2012 Micron Technology, Inc. All rights reserved.

Downloaded from Arrow.com.

Table 19: CFI Query System Interface Information

Note 1 applies to the entire table

Address		Data	Description	Value
x16	x8			
1Bh	36h	0027h	V_{CC} logic supply minimum program/erase voltage Bits[7:4] BCD value in volts Bits[3:0] BCD value in 100mV	2.7V
1Ch	38h	0036h	V_{CC} logic supply maximum program/erase voltage Bits[7:4] BCD value in volts Bits[3:0] BCD value in 100mV	3.6V
1Dh	3Ah	00B5h	V_{PPH} (programming) supply minimum program/erase voltage Bits[7:4] hex value in volts Bits[3:0] BCD value in 100mV	11.5V
1Eh	3Ch	00C5h	V_{PPH} (programming) supply maximum program/erase voltage Bits[7:4] hex value in volts Bits[3:0] BCD value in 10mV	12.5V
1Fh	3Eh	0009h	Typical timeout for single byte/word program = 2^nµs	512µs
20h	40h	000Ah	Typical timeout for maximum size buffer program = 2^nµs	1024µs
21h	42h	000Ah	Typical timeout per individual block erase = 2^nms	1s
22h	44h	0012h	Typical timeout for full chip erase = 2^nms	256Mb: 262s
		0013h		512Mb: 524s
		0014h		1Gb: 1048s
		0015h		2Gb: 2097s
23h	46h	0001h	Maximum timeout for byte/word program = 2^n times typical	1024µs
24h	48h	0002h	Maximum timeout for buffer program = 2^n times typical	4096µs
25h	4Ah	0002h	Maximum timeout per individual block erase = 2^n times typical	4s
26h	4Ch	0002h	Maximum timeout for chip erase = 2^n times typical	256Mb: 1048s
		0002h		512Mb: 2096s
		0002h		1Gb: 4194s
		0002h		2Gb: 8388s

Note: 1. The values in this table are valid for both packages.

Table 20: Device Geometry Definition

Address		Data	Description	Value
x16	x8			
27h	4Eh	0019h	Device size = 2^n in number of bytes	32MB
		001Ah		64MB
		001Bh		128MB
		001Ch		256MB
28h 29h	50h 52h	0002h 0000h	Flash device interface code description	x8, x16 asynchronous

Micron Technology, Inc. reserves the right to change products or specifications without notice.
© 2012 Micron Technology, Inc. All rights reserved.

Downloaded from Arrow.com.

Table 20: Device Geometry Definition (Continued)

Address		Data	Description	Value
x16	x8			
2Ah 2Bh	54h 56h	000Ah 0000h	Maximum number of bytes in multi-byte program or page = 2^n	1024[1]
2Ch	58h	0001h	Number of erase block regions. It specifies the number of regions containing contiguous erase blocks of the same size.	1
2Dh 2Eh	5Ah 5Ch	00FFh 0000h	Erase block region 1 information Number of identical-size erase blocks = 00FFh + 1 / 01FFh + 1 / 03FFh + 1 / 07FFh + 1	256
		00FFh 0001h		512
		00FFh 0003h		1024
		00FFh 0007h		2048
2Fh 30h	5Eh 60h	0000h 0002h	Erase block region 1 information Block size in region 1 = 0200h × 256 bytes	128KB
31h 32h 33h 34h	62h 64h 66h 68h	0000h 0000h 0000h 0000h	Erase block region 2 information	0
35h 36h 37h 38h	6Ah 6Ch 6Eh 70h	0000h 0000h 0000h 0000h	Erase block region 3 information	0
39h 3Ah 3Bh 3Ch	72h 74h 76h 78h	0000h 0000h 0000h 0000h	Erase block region 4 information	0

Note: 1. For x16/x8 mode, the maximum buffer size is 1024/256 bytes, respectively.

Table 21: Primary Algorithm-Specific Extended Query Table

Note 1 applies to the entire table

Address		Data	Description	Value
x16	x8			
40h	80h	0050h	Primary algorithm extended query table unique ASCII string “PRI”	"P"
41h	82h	0052h		"R"
42h	84h	0049h		"I"
43h	86h	0031h	Major version number, ASCII	"1"
44h	88h	0033h	Minor version number, ASCII	"3"

Micron Technology, Inc. reserves the right to change products or specifications without notice.
© 2012 Micron Technology, Inc. All rights reserved.

Downloaded from Arrow.com.

Table 21: Primary Algorithm-Specific Extended Query Table (Continued)

Note 1 applies to the entire table

Address		Data	Description	Value
x16	x8			
45h	8Ah	0018h	Address sensitive unlock (bits[1:0]): 00 = Required 01 = Not required Silicon revision number (bits[7:2])	Required
46h	8Ch	0002h	Erase suspend: 00 = Not supported 01 = Read only 02 = Read and write	2
47h	8Eh	0001h	Block protection: 00 = Not supported x = Number of blocks per group	1
48h	90h	0000h	Temporary block unprotect: 00 = Not supported 01 = Supported	Not supported
49h	92h	0008h	Block protect/unprotect: 08 = M29EWH/M29EWL	8
4Ah	94h	0000h	Simultaneous operations: Not supported	–
4Bh	96h	0000h	Burst mode: 00 = Not supported 01 = Supported	Not supported
4Ch	98h	0003h	Page mode: 00 = Not supported 01 = 8-word page 02 = 8-word page 03 = 16-word page	16-word page
4Dh	9Ah	00B5h	V_{PPH} supply minimum program/erase voltage: Bits[7:4] hex value in volts Bits[3:0] BCD value in 100mV	11.5V
4Eh	9Ch	00C5h	V_{PPH} supply maximum program/erase voltage: Bits[7:4] hex value in volts Bits[3:0] BCD value in 100mV	12.5V
4Fh	9Eh	00xxh	Top/bottom boot block flag: xx = 04h: Uniform device, HW protection for lowest block xx = 05h: Uniform device, HW protection for highest block	Uniform + V_{PP}/WP# protecting highest or lowest block
50h	A0h	0001h	Program suspend: 00 = Not supported 01 = Supported	Supported

Note: 1. The values in this table are valid for both packages.

Micron Technology, Inc. reserves the right to change products or specifications without notice.
© 2012 Micron Technology, Inc. All rights reserved.

Downloaded from Arrow.com.

Power-Up and Reset Characteristics

Table 22: Power-Up Specifications

Parameter	Symbol		Min	Unit	Notes
	Legacy	JEDEC			
V_{CC} HIGH to V_{CCQ} HIGH	–	^{t}VCHVCQH	0	µs	1
V_{CC} HIGH to rising edge of RST#	^{t}VCS	^{t}VCHPH	300	µs	2, 3
V_{CCQ} HIGH to rising edge of RST#	^{t}VIOS	^{t}VCQHPH	0	µs	2, 3
RST# HIGH to chip enable LOW	^{t}RH	^{t}PHEL	50	ns	
RST# HIGH to write enable LOW	–	^{t}PHWL	150	ns	

Notes:
1. V_{CC} should attain $V_{CC,min}$ from V_{SS} simultaneously with or prior to applying V_{CCQ}, V_{PP} during power up. V_{CC} should attain V_{SS} during power down.
2. If RST# is not stable for ^{t}VCS or ^{t}VIOS, the device will not allow any READ or WRITE operations, and a hardware reset is required.
3. Power supply transitions should only occur when RST# is LOW.

Figure 14: Power-Up Timing

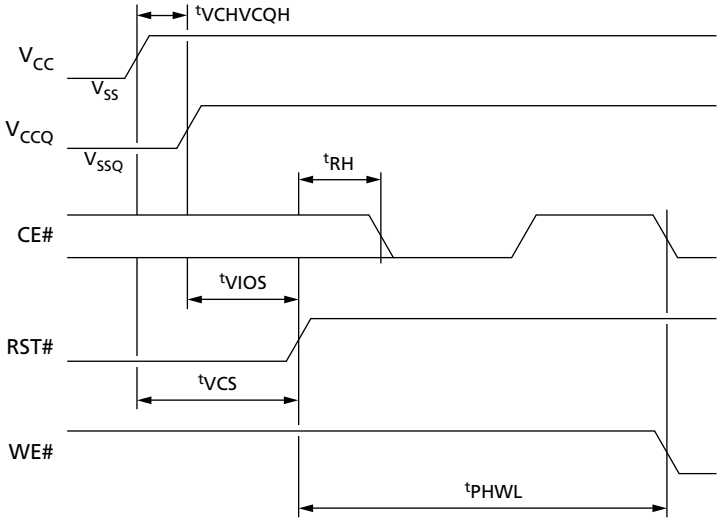

Micron Technology, Inc. reserves the right to change products or specifications without notice.
© 2012 Micron Technology, Inc. All rights reserved.

Downloaded from Arrow.com.

Table 23: Reset AC Specifications

Condition/Parameter	Symbol		Min	Max	Unit	Notes
	Legacy	JEDEC				
RST# LOW to read mode during program or erase	^{t}READY	^{t}PLRH	–	32	µs	1
RST# pulse width	^{t}RP	^{t}PLPH	100	–	ns	
RST# HIGH to CE# LOW, OE# LOW	^{t}RH	^{t}PHEL, ^{t}PHGL	50	–	ns	1
RST# LOW to standby mode during read mode	^{t}RPD	–	10	–	µs	
RST# LOW to standby mode during program or erase			50	–	µs	
RY/BY# HIGH to CE# LOW, OE# LOW	^{t}RB	^{t}RHEL, ^{t}RHGL	0	–	ns	1

Note: 1. Sampled only; not 100% tested.

Figure 15: Reset AC Timing – No PROGRAM/ERASE Operation in Progress

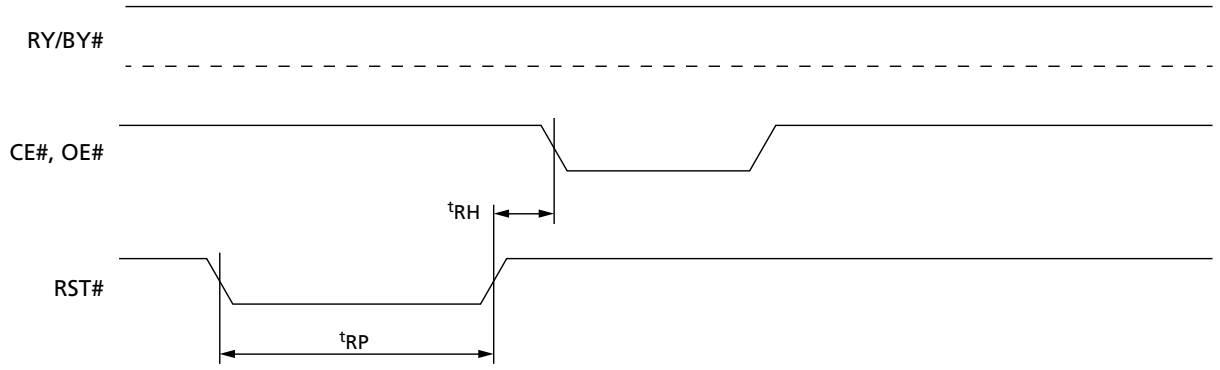

Figure 16: Reset AC Timing During PROGRAM/ERASE Operation

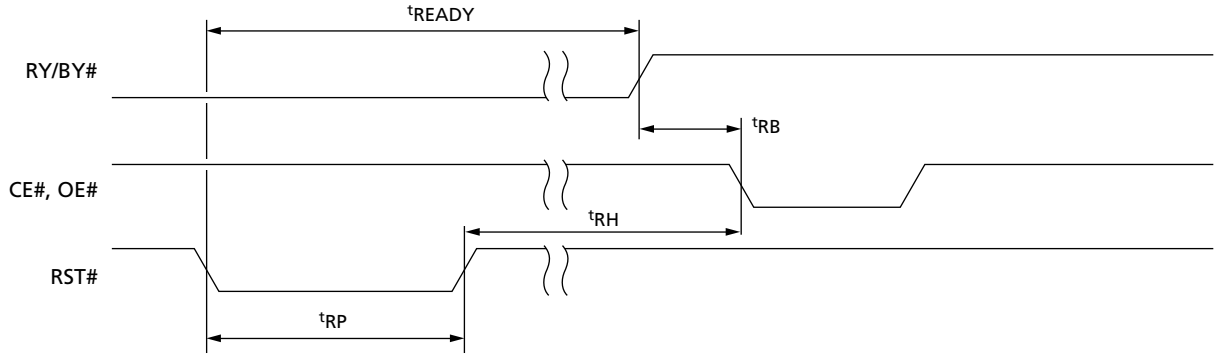

Micron Technology, Inc. reserves the right to change products or specifications without notice.
© 2012 Micron Technology, Inc. All rights reserved.

Downloaded from Arrow.com.

Absolute Ratings and Operating Conditions

Stresses greater than those listed may cause permanent damage to the device. This is a stress rating only, and functional operation of the device at these or any other conditions outside those indicated in the operational sections of this specification is not implied. Exposure to absolute maximum rating conditions for extended periods may adversely affect reliability.

Table 24: Absolute Maximum/Minimum Ratings

Parameter	Symbol	Min	Max	Unit	Notes
Temperature under bias	T_{BIAS}	–50	125	°C	
Storage temperature	T_{STG}	–65	150	°C	
Supply voltage	V_{CC}	–2	V_{CC} + 2	V	1, 2
Input/output supply voltage	V_{CCQ}	–2	V_{CCQ} + 2	V	1, 2
Program voltage	V_{PPH}	–0.6	14.5	V	3

Notes:
1. During signal transitions, minimum voltage may undershoot to –2V for periods less than 20ns.
2. During signal transitions, maximum voltage may overshoot to V_{CC} + 2V for periods less than 20ns.
3. V_{PPH} must not remain at 12V for more than 80 hours cumulative.

Table 25: Operating Conditions

Parameter	Symbol	Min	Max	Unit
Supply voltage	V_{CC}	2.7	3.6	V
Input/output supply voltage ($V_{CCQ} \le V_{CC}$)	V_{CCQ}	1.65	3.6	V
Program voltage	V_{PP}	–2.0	12.5	V
Ambient operating temperature	T_A	–40	85	°C
Load capacitance	C_L	30		pF
Input rise and fall times	–	–	10	ns
Input pulse voltages	–	0 to V_{CCQ}		V
Input and output timing reference voltages	–	$V_{CCQ}/2$		V

Micron Technology, Inc. reserves the right to change products or specifications without notice.
© 2012 Micron Technology, Inc. All rights reserved.

Downloaded from Arrow.com.

Figure 17: AC Measurement Load Circuit

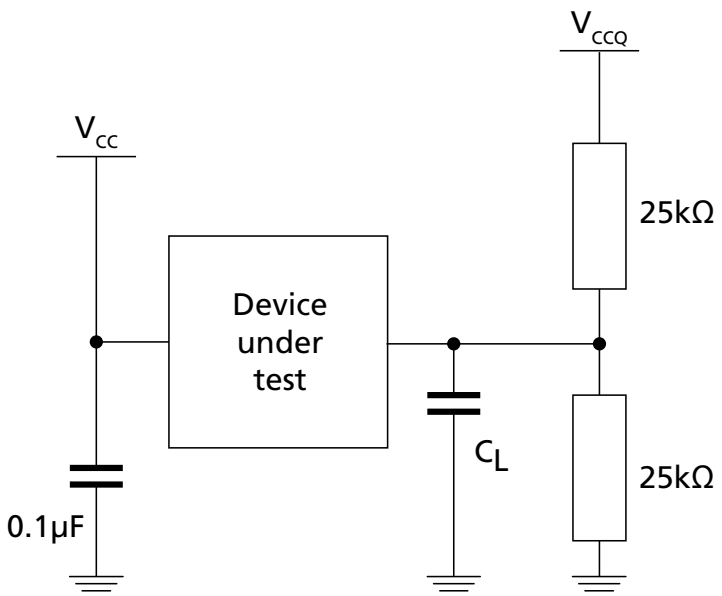

Note: 1. C_L includes jig capacitance.

Figure 18: AC Measurement I/O Waveform

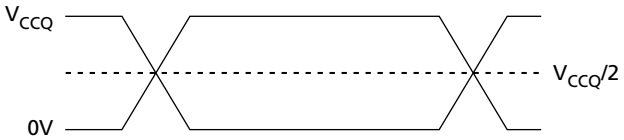

Table 26: Input/Output Capacitance

Parameter	Symbol	Test Condition	Min	Max	Unit
Input capacitance for 256Mb and 512Mb	C_{IN}	V_{IN} = 0V	3	8	pF
Input capacitance for 1Gb			4	9	pF
Input capacitance for 2Gb			8	18	pF
Output capacitance	C_{OUT}	V_{OUT} = 0V	3	6	pF

Micron Technology, Inc. reserves the right to change products or specifications without notice.
© 2012 Micron Technology, Inc. All rights reserved.

Downloaded from Arrow.com.

DC Characteristics

Table 27: DC Current Characteristics

Parameter		Symbol	Conditions		Min	Typ	Max	Unit	Notes
Input leakage current		I_{LI}	$0V \le V_{IN} \le V_{CC}$		–	–	±1	µA	1
Output leakage current		I_{LO}	$0V \le V_{OUT} \le V_{CC}$		–	–	±1	µA	
VCC read current	Random read	I_{CC1}	CE# = V_{IL}, OE# = V_{IH}, *f* = 5 MHz		–	26	31	mA	
	Page read		CE# = V_{IL}, OE# = V_{IH}, *f* = 13 MHz		–	12	16	mA	
VCC standby current	256Mb	I_{CC2}	CE# = V_{CCQ} ±0.2V, RST# = V_{CCQ} ±0.2V		–	65	210	µA	
	512Mb				–	70	225	µA	
	1Gb				–	75	240	µA	
	2Gb				–	150	480	µA	
VCC program/erase/blank check current		I_{CC3}	Program/ erase controller active	V_{PP}/WP# = V_{IL} or V_{IH}	–	35	50	mA	2
				V_{PP}/WP# = V_{PPH}	–	35	50	mA	
V_{PP} current	Read	I_{PP1}	V_{PP}/WP# ≤ V_{CC}		–	0.2	5	µA	
	Standby				–	2	15	µA	
	Reset	I_{PP2}	RST# = V_{SS} ±0.2V		–	0.2	5	µA	
	PROGRAM operation ongoing	I_{PP3}	V_{PP}/WP# = 12V ±5%		–	0.05	0.10	mA	
			V_{PP}/WP# = V_{CC}		–	0.05	0.10	mA	
	ERASE operation ongoing	I_{PP4}	V_{PP}/WP# = 12V ±5%		–	0.05	0.10	mA	
			V_{PP}/WP# = V_{CC}		–	0.05	0.10	mA	

Notes:
1. The maximum input leakage current is ±5µA on the V_{PP}/WP# pin.
2. Sampled only; not 100% tested.

Micron Technology, Inc. reserves the right to change products or specifications without notice.
© 2012 Micron Technology, Inc. All rights reserved.

Downloaded from Arrow.com.

Table 28: DC Voltage Characteristics

Parameter	Symbol	Conditions	Min	Typ	Max	Unit	Notes
Input LOW voltage	V_{IL}	$V_{CC} \geq 2.7V$	–0.5	–	0.8	V	
Input HIGH voltage	V_{IH}	$V_{CC} \geq 2.7V$	$0.7V_{CCQ}$	–	$V_{CCQ} + 0.4$	V	
Output LOW voltage	V_{OL}	$I_{OL} = 100\mu A$, $V_{CC} = V_{CC,min}$, $V_{CCQ} = V_{CCQ,min}$	–	–	$0.15V_{CCQ}$	V	
Output HIGH voltage	V_{OH}	$I_{OH} = 100\mu A$, $V_{CC} = V_{CC,min}$, $V_{CCQ} = V_{CCQ,min}$	$0.85V_{CCQ}$	–	–	V	
Voltage for V_{PP}/WP# program acceleration	V_{PPH}	–	11.5	–	12.5	V	
Program/erase lockout supply voltage	V_{LKO}	–	2.3	–	–	V	1

Note: 1. Sampled only; not 100% tested.

Micron Technology, Inc. reserves the right to change products or specifications without notice.
© 2012 Micron Technology, Inc. All rights reserved.

Downloaded from Arrow.com.

Read AC Characteristics

Table 29: Read AC Characteristics

Parameter	Symbol		Condition	Package	Min	Max	Unit	Notes
	Legacy	JEDEC						
Address valid to next address valid	^{t}RC	^{t}AVAV	CE# = V_{IL}, OE# = V_{IL}	Fortified BGA	100	–	ns	
				TSOP	110	–	ns	
Address valid to output valid	^{t}ACC	^{t}AVQV	CE# = V_{IL}, OE# = V_{IL}	Fortified BGA	–	100	ns	
				TSOP	–	110	ns	
Address valid to output valid (page)	^{t}PAGE	^{t}AVQV1	CE# = V_{IL}, OE# = V_{IL}	Fortified BGA	–	25	ns	
				TSOP	–	25	ns	
CE# LOW to output transition	^{t}LZ	^{t}ELQX	OE# = V_{IL}	Fortified BGA	0	–	ns	1
				TSOP	0	–	ns	1
CE# LOW to output valid	^{t}CE	^{t}ELQV	OE# = V_{IL}	Fortified BGA	–	100	ns	
				TSOP	–	110	ns	
OE# LOW to output transition	^{t}OLZ	^{t}GLQX	CE# = V_{IL}	Fortified BGA	0	–	ns	1
				TSOP	0	–	ns	1
OE# LOW to output valid	^{t}OE	^{t}GLQV	CE# = V_{IL}	Fortified BGA	–	25	ns	
				TSOP	–	25	ns	
CE# HIGH to output High-Z	^{t}HZ	^{t}EHQZ	OE# = V_{IL}	Fortified BGA	–	20	ns	1
				TSOP	–	20	ns	1
OE# HIGH to output High-Z	^{t}DF	^{t}GHQZ	CE# = V_{IL}	Fortified BGA	–	15	ns	1
				TSOP	–	15	ns	1
CE# HIGH, OE# HIGH, or address transition to output transition	^{t}OH	^{t}EHQX, ^{t}GHQX, ^{t}AXQX	–	Fortified BGA	0	–	ns	
				TSOP	0	–	ns	
CE# LOW to BYTE# LOW	^{t}ELFL	^{t}ELBL	–	Fortified BGA	–	10	ns	
				TSOP	–	10	ns	
CE# LOW to BYTE# HIGH	^{t}ELFH	^{t}ELBH	–	Fortified BGA	–	10	ns	
				TSOP	–	10	ns	
BYTE# LOW to output valid	^{t}FLQV	^{t}BLQV	–	Fortified BGA	–	1	µs	
				TSOP	–	1	µs	
BYTE# HIGH to output valid	^{t}FHQV	^{t}BHQV	–	Fortified BGA	–	1	µs	
				TSOP	–	1	µs	

Note: 1. Sampled only; not 100% tested.

Micron Technology, Inc. reserves the right to change products or specifications without notice.
© 2012 Micron Technology, Inc. All rights reserved.

Downloaded from Arrow.com.

Figure 19: Random Read AC Timing (8-Bit Mode)

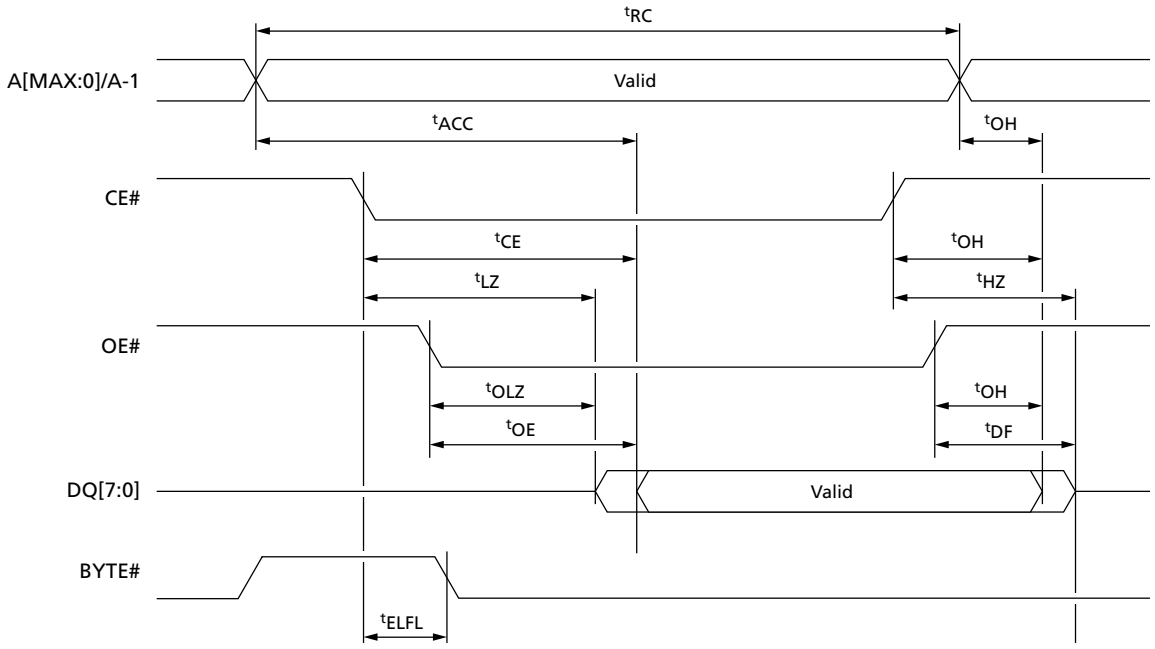

Figure 20: Random Read AC Timing (16-Bit Mode)

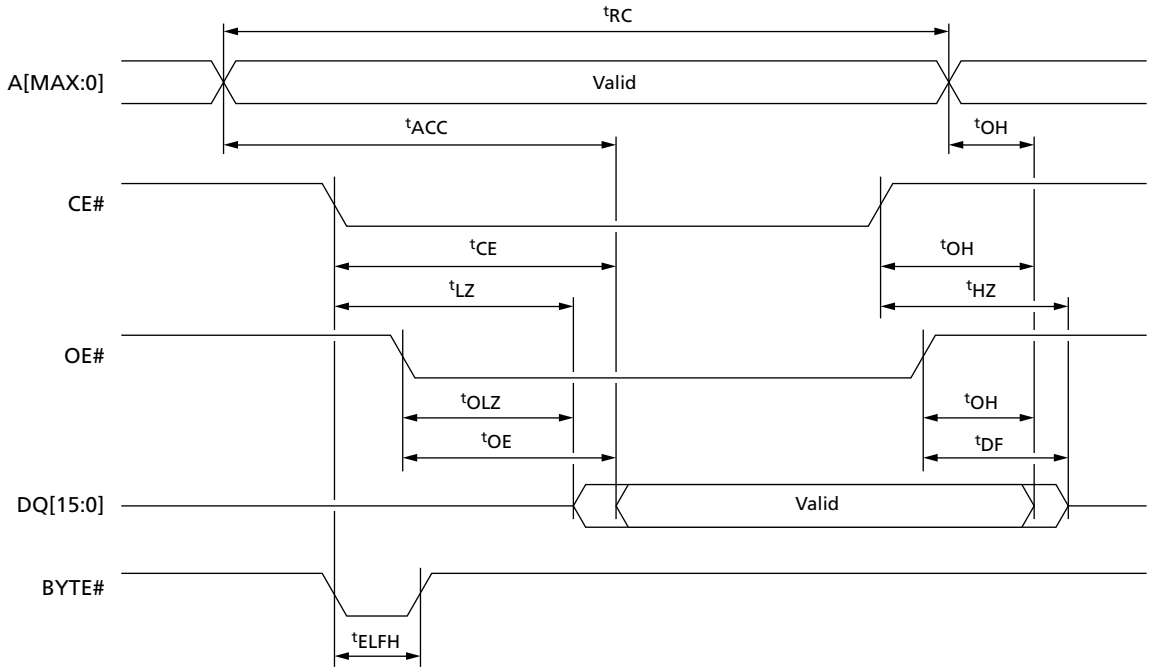

Micron Technology, Inc. reserves the right to change products or specifications without notice.
© 2012 Micron Technology, Inc. All rights reserved.

Downloaded from Arrow.com.

Figure 21: BYTE# Transition Read AC Timing

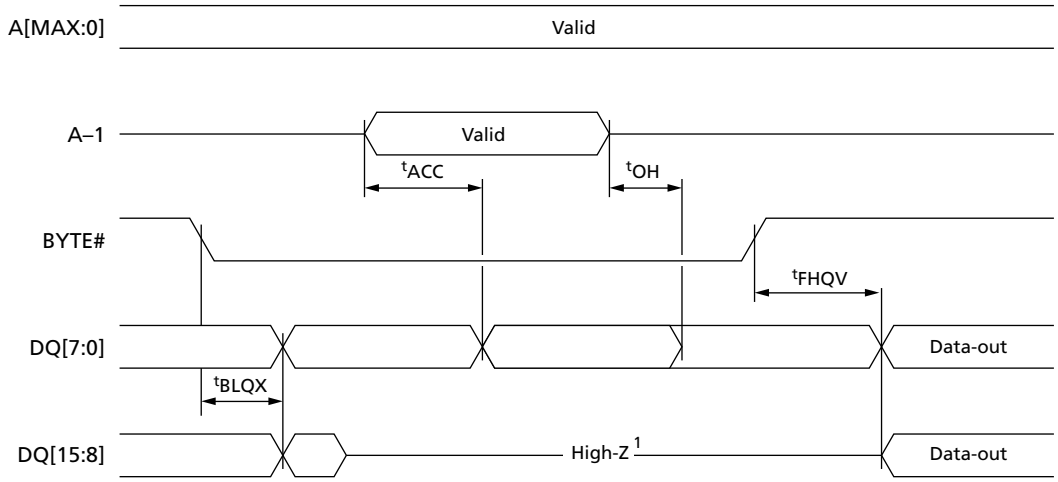

Figure 22: Page Read AC Timing

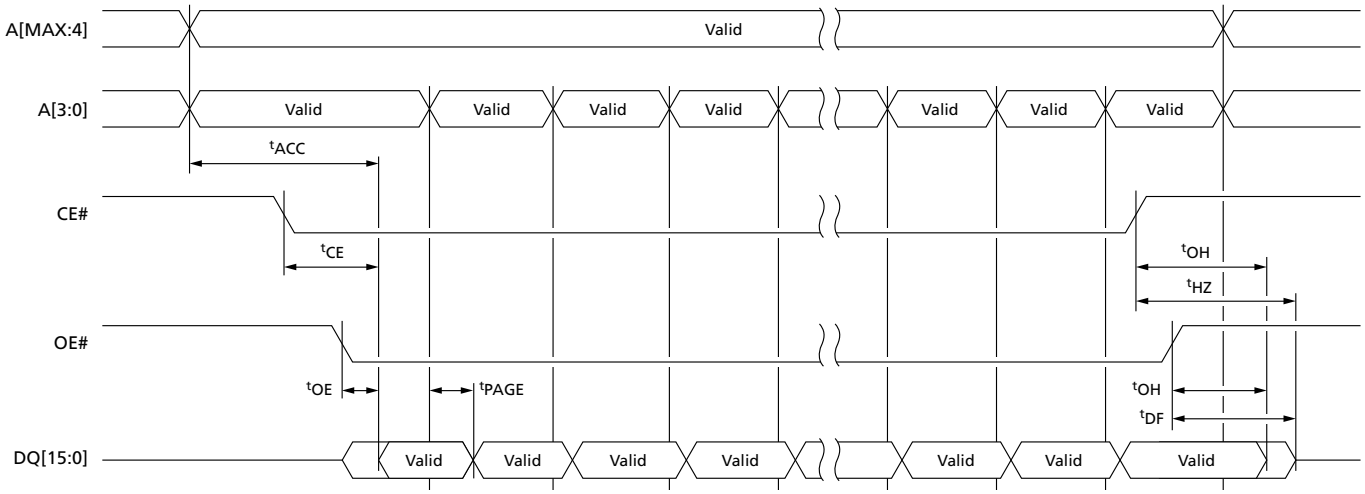

Note: 1. Page size is 16 words (32 bytes) and is addressed by address inputs A[3:0] in x16 bus mode and A[3:0] plus DQ15/A–1 in x8 bus mode.

Micron Technology, Inc. reserves the right to change products or specifications without notice.
© 2012 Micron Technology, Inc. All rights reserved.

Downloaded from Arrow.com.

Write AC Characteristics

Table 30: WE#-Controlled Write AC Characteristics

Parameter	Symbol		Package	Min	Typ	Max	Unit	Notes
	Legacy	JEDEC						
Address valid to next address valid	^{t}WC	^{t}AVAV	Fortified BGA	100	–	–	ns	
			TSOP	110	–	–	ns	
CE# LOW to WE# LOW	^{t}CS	^{t}ELWL	Fortified BGA	0	–	–	ns	
			TSOP	0	–	–	ns	
WE# LOW to WE# HIGH	^{t}WP	^{t}WLWH	Fortified BGA	35	–	–	ns	
			TSOP	35	–	–	ns	
Input valid to WE# HIGH	^{t}DS	^{t}DVWH	Fortified BGA	30	–	–	ns	1
			TSOP	30	–	–	ns	1
WE# HIGH to input transition	^{t}DH	^{t}WHDX	Fortified BGA	0	–	–	ns	
			TSOP	0	–	–	ns	
WE# HIGH to CE# HIGH	^{t}CH	^{t}WHEH	Fortified BGA	0	–	–	ns	
			TSOP	0	–	–	ns	
WE# HIGH to WE# LOW	^{t}WPH	^{t}WHWL	Fortified BGA	20	–	–	ns	
			TSOP	20	–	–	ns	
Address valid to WE# LOW	^{t}AS	^{t}AVWL	Fortified BGA	0	–	–	ns	
			TSOP	0	–	–	ns	
WE# LOW to address transition	^{t}AH	^{t}WLAX	Fortified BGA	45	–	–	ns	
			TSOP	45	–	–	ns	
OE# HIGH to WE# LOW	–	^{t}GHWL	Fortified BGA	0	–	–	ns	
			TSOP	0	–	–	ns	
WE# HIGH to OE# LOW	^{t}OEH	^{t}WHGL	Fortified BGA	0	–	–	ns	
			TSOP	0	–	–	ns	
Program/erase valid to RY/BY# LOW	^{t}BUSY	^{t}WHRL	Fortified BGA	–	–	30	ns	2
			TSOP	–	–	30	ns	2
V_{CC} HIGH to CE# LOW	^{t}VCS	^{t}VCHEL	Fortified BGA	300	–	–	µs	
			TSOP	300	–	–	µs	
WRITE TO BUFFER PROGRAM operation (512 words)	^{t}WHWH1	^{t}WHWH1	Fortified BGA	–	900	–	µs	
			TSOP	–	900	–	µs	
PROGRAM operation (single word or byte)			Fortified BGA	–	210	–	µs	
			TSOP	–	210	–	µs	

Notes:
1. The user's write timing must comply with this specification. Any violation of this write timing specification may result in permanent damage to the NOR Flash device.
2. Sampled only; not 100% tested.

Micron Technology, Inc. reserves the right to change products or specifications without notice.
© 2012 Micron Technology, Inc. All rights reserved.

Downloaded from Arrow.com.

Figure 23: WE#-Controlled Program AC Timing (8-Bit Mode)

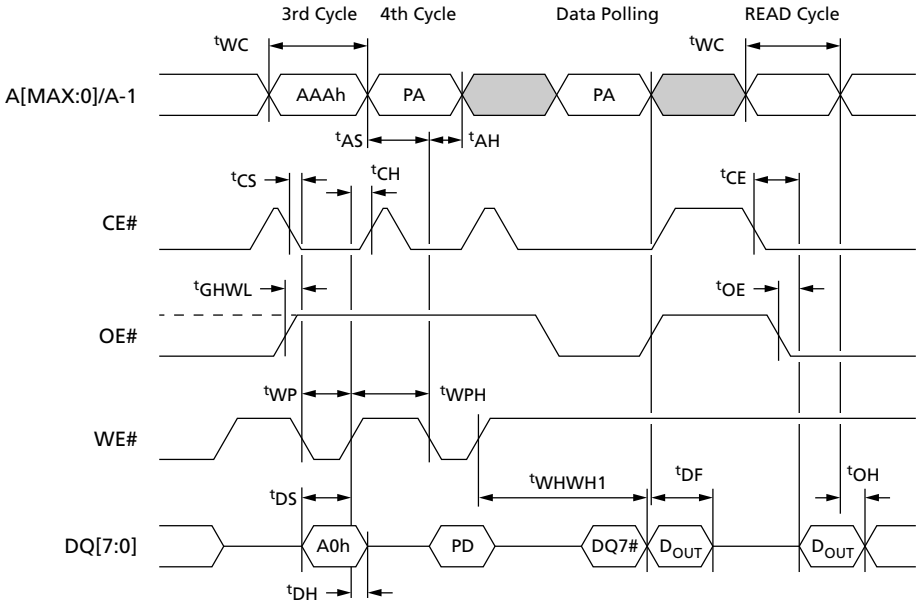

Notes:
1. Only the third and fourth cycles of the PROGRAM command are represented. The PROGRAM command is followed by checking of the data polling register bit and by a READ operation that outputs the data (D_{OUT}) programmed by the previous PROGRAM command.
2. PA is the address of the memory location to be programmed. PD is the data to be programmed.
3. DQ7 is the complement of the data bit being programmed to DQ7 (See Data Polling Bit [DQ7]).
4. See the following tables for timing details: Read AC Characteristics, WE#-Controlled Write AC Characteristics, and CE#-Controlled Write AC Characteristics.

Micron Technology, Inc. reserves the right to change products or specifications without notice.
© 2012 Micron Technology, Inc. All rights reserved.

Downloaded from Arrow.com.

Figure 24: WE#-Controlled Program AC Timing (16-Bit Mode)

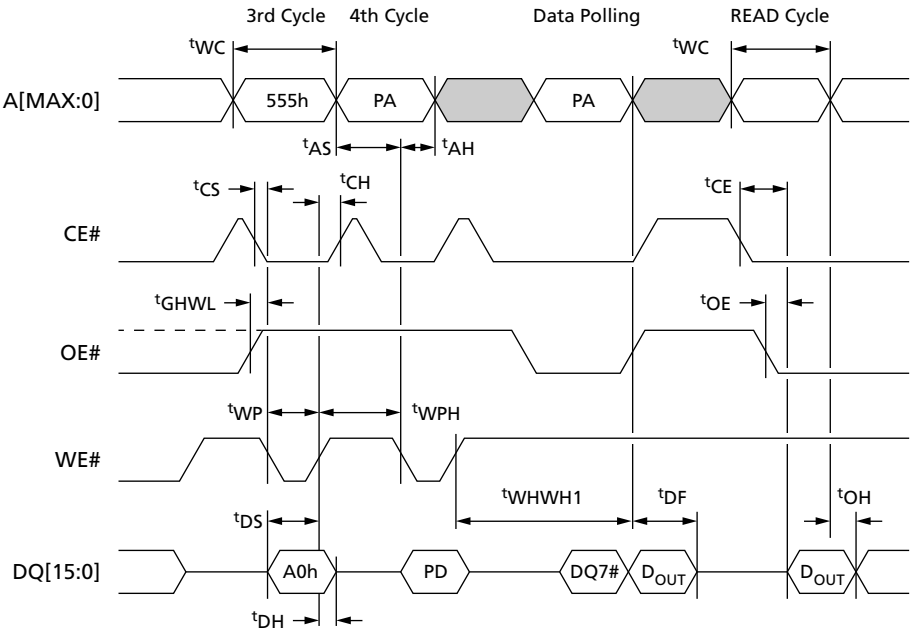

Notes:
1. Only the third and fourth cycles of the PROGRAM command are represented. The PROGRAM command is followed by checking of the data polling register bit and by a READ operation that outputs the data (D_{OUT}) programmed by the previous PROGRAM command.
2. PA is the address of the memory location to be programmed. PD is the data to be programmed.
3. DQ7 is the complement of the data bit being programmed to DQ7 (See Data Polling Bit [DQ7]).
4. See the following tables for timing details: Read AC Characteristics, WE#-Controlled Write AC Characteristics, and CE#-Controlled Write AC Characteristics.

Micron Technology, Inc. reserves the right to change products or specifications without notice.
© 2012 Micron Technology, Inc. All rights reserved.

Downloaded from Arrow.com.

Table 31: CE#-Controlled Write AC Characteristics

Parameter	Symbol		Package	Min	Typ	Max	Unit	Notes
	Legacy	JEDEC						
Address valid to next address valid	^{t}WC	^{t}AVAV	Fortified BGA	100	–	–	ns	
			TSOP	110	–	–	ns	
WE# LOW to CE# LOW	^{t}WS	^{t}WLEL	Fortified BGA	0	–	–	ns	
			TSOP	0	–	–	ns	
CE# LOW to CE# HIGH	^{t}CP	^{t}ELEH	Fortified BGA	35	–	–	ns	
			TSOP	35	–	–	ns	
Input valid to CE# HIGH	^{t}DS	^{t}DVEH	Fortified BGA	30	–	–	ns	1
			TSOP	30	–	–	ns	1
CE# HIGH to input transition	^{t}DH	^{t}EHDX	Fortified BGA	0	–	–	ns	
			TSOP	0	–	–	ns	
CE# HIGH to WE# HIGH	^{t}WH	^{t}EHWH	Fortified BGA	0	–	–	ns	
			TSOP	0	–	–	ns	
CE# HIGH to CE# LOW	^{t}CPH	^{t}EHEL	Fortified BGA	20	–	–	ns	
			TSOP	20	–	–	ns	
Address valid to CE# LOW	^{t}AS	^{t}AVEL	Fortified BGA	0	–	–	ns	
			TSOP	0	–	–	ns	
CE# LOW to address transition	^{t}AH	^{t}ELAX	Fortified BGA	45	–	–	ns	
			TSOP	45	–	–	ns	
OE# HIGH to CE# LOW	–	^{t}GHEL	Fortified BGA	0	–	–	ns	
			TSOP	0	–	–	ns	
WRITE TO BUFFER PROGRAM operation (512 words)	^{t}WHWH1	^{t}WHWH1	Fortified BGA	–	900	–	µs	
			TSOP	–	900	–	µs	
PROGRAM operation (single word or byte)			Fortified BGA	–	210	–	µs	
			TSOP	–	210	–	µs	

Note: 1. The user's write timing must comply with this specification. Any violation of this write timing specification may result in permanent damage to the NOR Flash device.

Micron Technology, Inc. reserves the right to change products or specifications without notice.
© 2012 Micron Technology, Inc. All rights reserved.

Downloaded from Arrow.com.

Figure 25: CE#-Controlled Program AC Timing (8-Bit Mode)

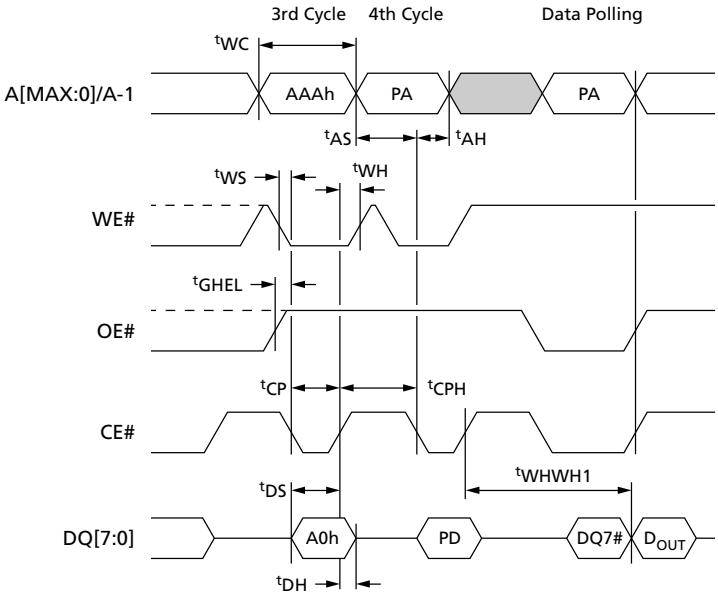

Notes:
1. Only the third and fourth cycles of the PROGRAM command are represented. The PROGRAM command is followed by checking of the data polling register bit.
2. PA is the address of the memory location to be programmed. PD is the data to be programmed.
3. DQ7 is the complement of the data bit being programmed to DQ7 (See Data Polling Bit [DQ7]).
4. See the following tables for timing details: Read AC Characteristics, WE#-Controlled Write AC Characteristics, and CE#-Controlled Write AC Characteristics.

Micron Technology, Inc. reserves the right to change products or specifications without notice.
© 2012 Micron Technology, Inc. All rights reserved.

Downloaded from Arrow.com.

Figure 26: CE#-Controlled Program AC Timing (16-Bit Mode)

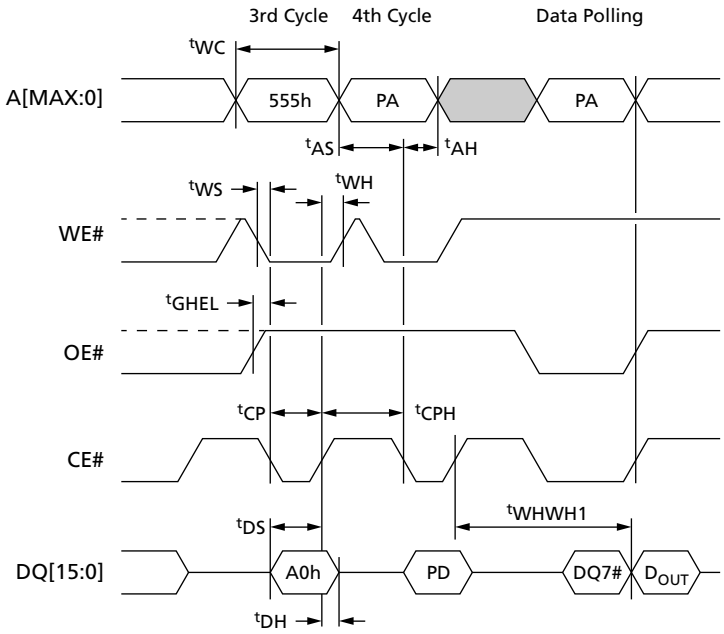

Notes:
1. Only the third and fourth cycles of the PROGRAM command are represented. The PROGRAM command is followed by checking of the data polling register bit.
2. PA is the address of the memory location to be programmed. PD is the data to be programmed.
3. DQ7 is the complement of the data bit being programmed to DQ7 (See Data Polling Bit [DQ7]).
4. See the following tables for timing details: Read AC Characteristics, WE#-Controlled Write AC Characteristics, and CE#-Controlled Write AC Characteristics.

Micron Technology, Inc. reserves the right to change products or specifications without notice.
© 2012 Micron Technology, Inc. All rights reserved.

Downloaded from Arrow.com.

Figure 27: Chip/Block Erase AC Timing (8-Bit Mode)

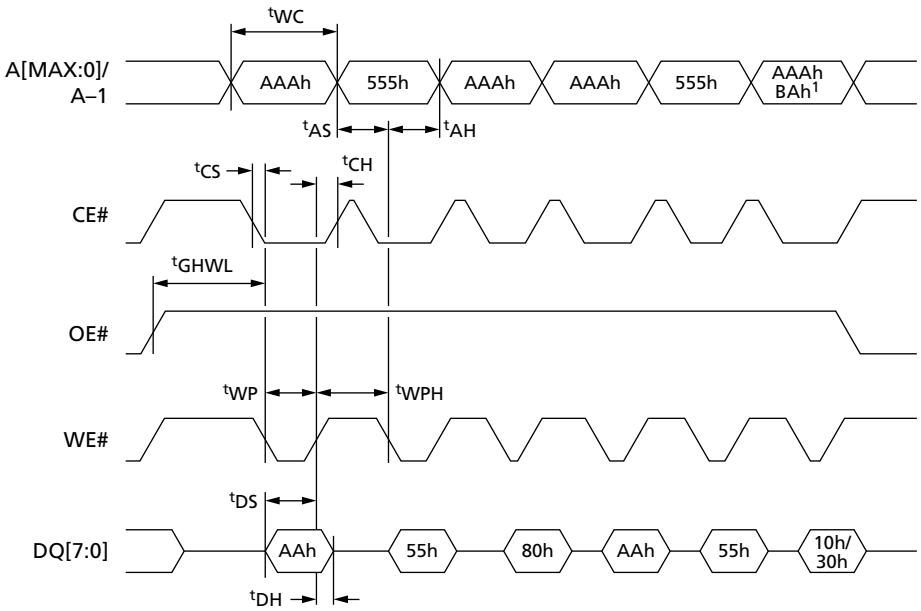

Notes:
1. For a CHIP ERASE command, the address is 555h, and the data is 10h; for a BLOCK ERASE command, the address is BAd, and the data is 30h.
2. BAd is the block address.
3. See the following tables for timing details: Read AC Characteristics, WE#-Controlled Write AC Characteristics, and CE#-Controlled Write AC Characteristics.

Micron Technology, Inc. reserves the right to change products or specifications without notice.
© 2012 Micron Technology, Inc. All rights reserved.

Downloaded from Arrow.com.

Figure 28: Chip/Block Erase AC Timing (16-Bit Mode)

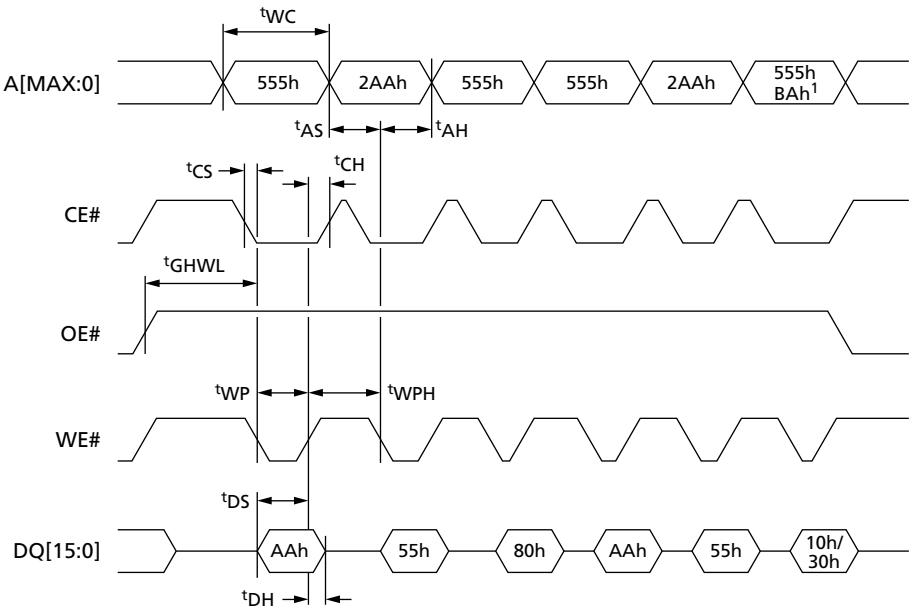

Notes:
1. For a CHIP ERASE command, the address is 555h, and the data is 10h; for a BLOCK ERASE command, the address is BAd, and the data is 30h.
2. BAd is the block address.
3. See the following tables for timing details: Read AC Characteristics, WE#-Controlled Write AC Characteristics, and CE#-Controlled Write AC Characteristics.

Micron Technology, Inc. reserves the right to change products or specifications without notice.
© 2012 Micron Technology, Inc. All rights reserved.

Downloaded from Arrow.com.

Accelerated Program, Data Polling/Toggle AC Characteristics

Table 32: Accelerated Program and Data Polling/Data Toggle AC Characteristics

Parameter	Symbol		Min	Max	Unit
	Legacy	JEDEC			
V_{PP}/WP# rising or falling time	–	^{t}VHVPP	250	–	ns
Address setup time to CE# or OE# LOW	^{t}ASO	^{t}AXGL	15	–	ns
Address hold time from OE# or CE# HIGH	^{t}AHT	^{t}GHAX, ^{t}EHAX	0	–	ns
CE# HIGH time	^{t}EPH	^{t}EHEL2	30	–	ns
WE# HIGH to OE# log (toggle and data polling)	^{t}OEH	^{t}WHGL2	20	–	ns
OE# HIGH time	^{t}OPH	^{t}GHGL2	20	–	ns
Program/erase valid to RY/BY# LOW	^{t}BUSY	^{t}WHRL	–	90	ns

Note: 1. Sampled only; not 100% tested.

Figure 29: Accelerated Program AC Timing

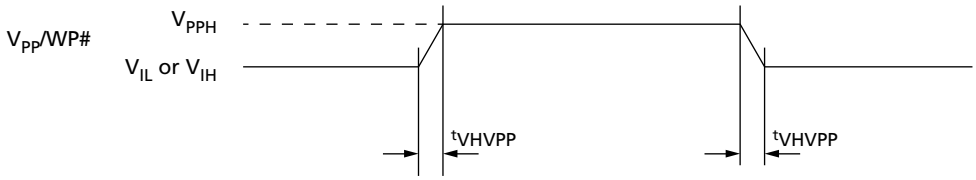

Figure 30: Data Polling AC Timing

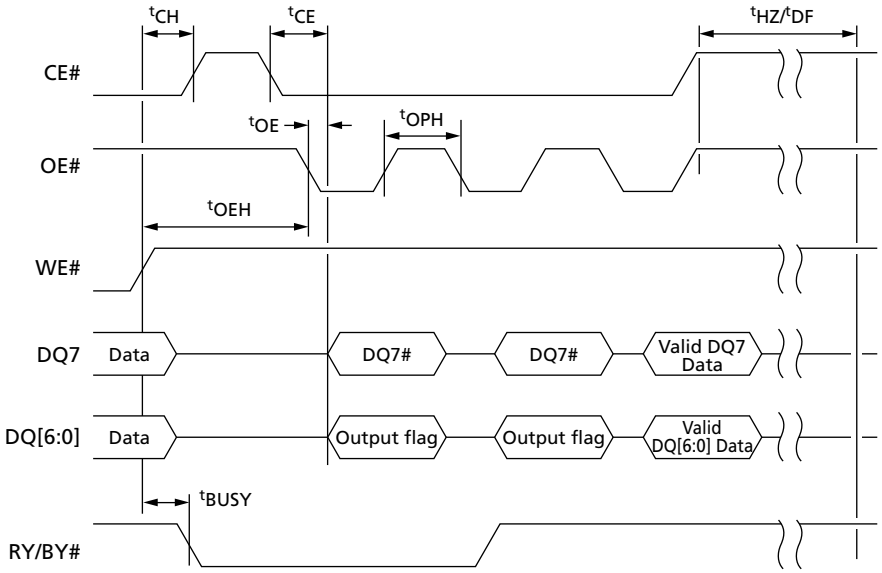

Notes: 1. DQ7 returns a valid data bit when the PROGRAM or ERASE command has completed.
2. See the following tables for timing details: Read AC Characteristics, Accelerated Program and Data Polling/Data Toggle AC Characteristics.

Micron Technology, Inc. reserves the right to change products or specifications without notice.
© 2012 Micron Technology, Inc. All rights reserved.

Downloaded from Arrow.com.

Figure 31: Toggle/Alternative Toggle Bit Polling AC Timing

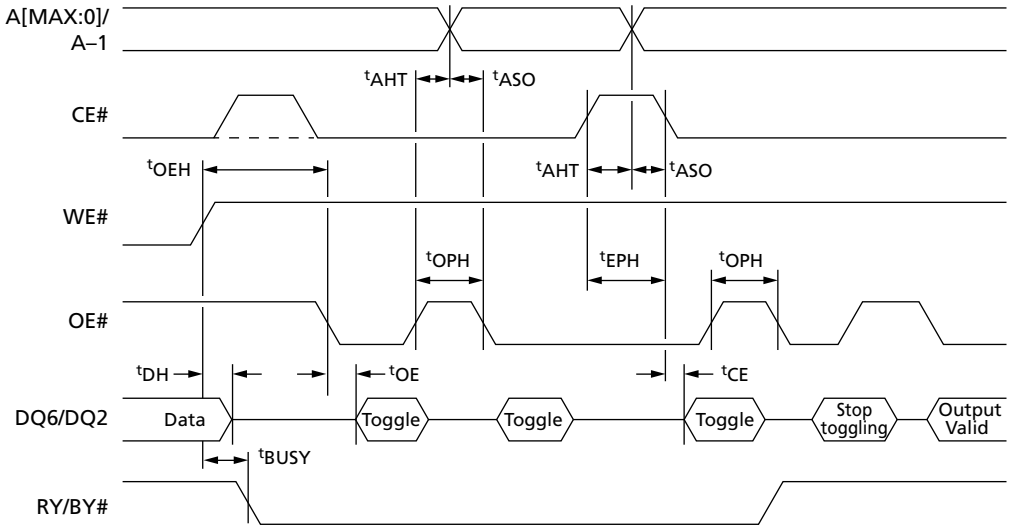

Notes:
1. DQ6 stops toggling when the PROGRAM or ERASE command has completed. DQ2 stops toggling when the CHIP ERASE or BLOCK ERASE command has completed.
2. See the following tables for timing details: Read AC Characteristics, Accelerated Program and Data Polling/Data Toggle AC Characteristics.

Micron Technology, Inc. reserves the right to change products or specifications without notice.
© 2012 Micron Technology, Inc. All rights reserved.

Downloaded from Arrow.com.

Program/Erase Characteristics

Table 33: Program/Erase Characteristics

Notes 1 and 2 apply to the entire table.

Parameter		Buffer Size	Byte	Word	Min	Typ	Max	Unit	Notes
Block erase (128KB)		–	–	–	–	0.8	4	s	
Erase suspend latency time		–	–	–	–	27	37	µs	
Block erase timeout		–	–	–	–	–	50	µs	
Byte program	Single-byte program	–	–	–	–	210	456	µs	
	Byte write to buffer program	64	64	–	–	270	716	µs	
		128	128	–	–	310	900	µs	
		256	256	–	–	375	1140	µs	
	Effective write to buffer program per byte	64	1	–	–	4.22	11.2	µs	
		128	1	–	–	2.42	7	µs	
		256	1	–	–	1.46	4.45	µs	
Word program	Single-word program	–	–	–	–	210	456	µs	
	Word write to buffer program	32	–	32	–	270	716	µs	
		64	–	64	–	310	900	µs	
		128	–	128	–	375	1140	µs	
		256	–	256	–	505	1690	µs	
		512	–	512	–	900	3016	µs	
	Effective write to buffer program per word	32	–	1	–	8.44	22.4	µs	
		64	–	1	–	4.84	14.1	µs	
		128	–	1	–	2.93	8.9	µs	
		256	–	1	–	1.97	6.6	µs	
		512	–	1	–	1.76	5.89	µs	
Program suspend latency time		–	–	–	–	27	37	µs	
Blank check		–	–	–	–	3.2	–	ms	
Set nonvolatile protection bit time		–	–	–	–	210	456	µs	
Clear nonvolatile protection bit time		–	–	–	–	0.8	4	s	
PROGRAM/ERASE cycles (per block)		–	–	–	100,000	–	–	cycles	
Erase to suspend		–	–	–	–	500	–	µs	3

Notes:
1. Typical values measured at room temperature and nominal voltages.
2. Typical and maximum values are sampled, but not 100% tested.
3. Erase to suspend is the typical time between an initial BLOCK ERASE or ERASE RESUME command and a subsequent ERASE SUSPEND command. Violating the specification repeatedly during any particular block erase may cause erase failures.

Micron Technology, Inc. reserves the right to change products or specifications without notice.
© 2012 Micron Technology, Inc. All rights reserved.

Downloaded from Arrow.com.

Package Dimensions

Figure 32: 56-Pin TSOP – 14mm x 20mm

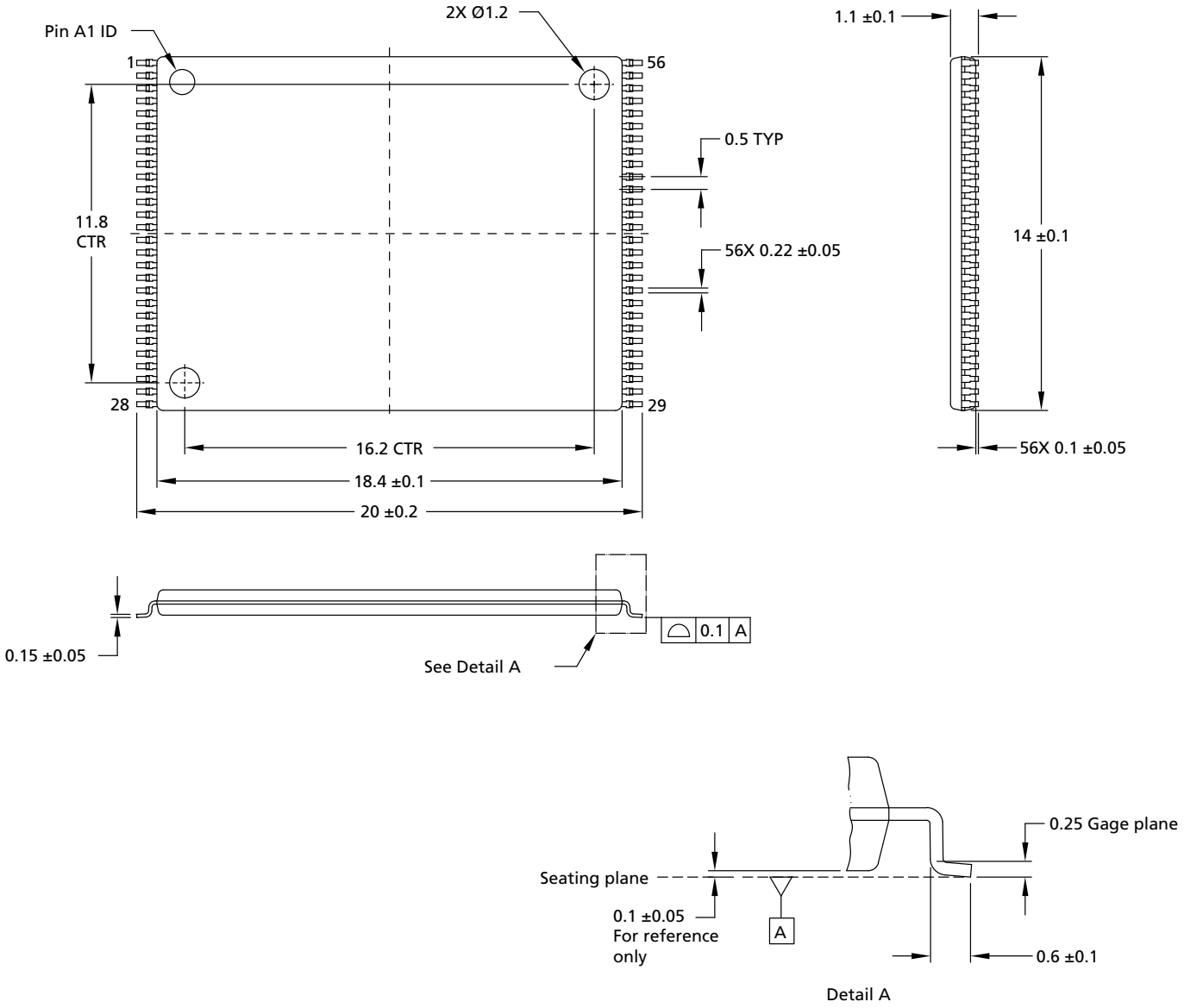

Notes:
1. All dimensions are in millimeters.
2. For the lead width value of 0.22 ±0.05, there is also a legacy value of 0.15 ±0.05.
3. Package width and length include mold flash.

Micron Technology, Inc. reserves the right to change products or specifications without notice.
© 2012 Micron Technology, Inc. All rights reserved.

Downloaded from Arrow.com.

Figure 33: 64-Ball Fortified BGA – 11mm x 13mm

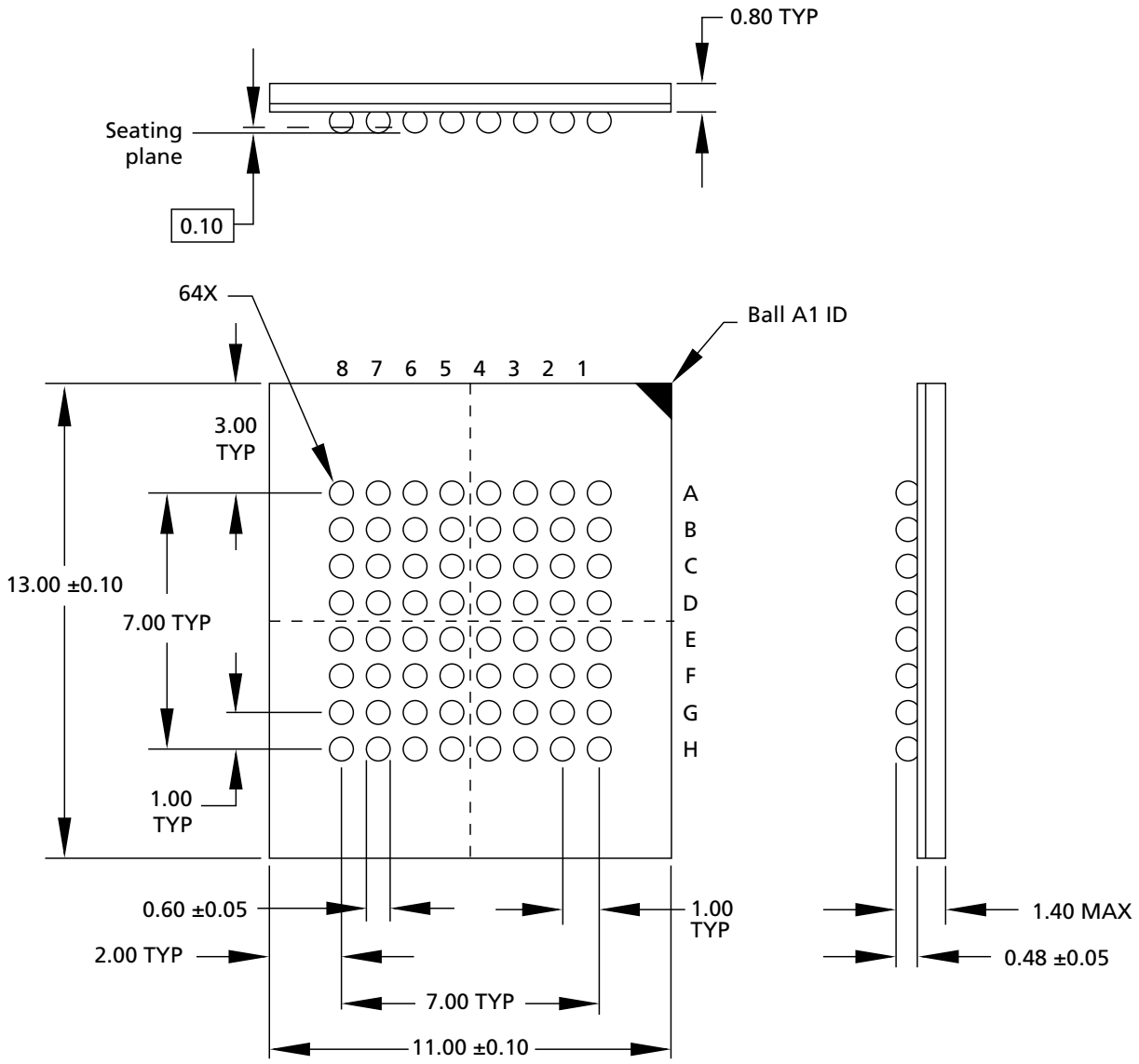

Notes: 1. All dimensions are in millimeters.
2. Only 2Gb (1Gb/1Gb) has A1 mark at the bottom.

Micron Technology, Inc. reserves the right to change products or specifications without notice.
© 2012 Micron Technology, Inc. All rights reserved.

Downloaded from Arrow.com.

Additional Resources

Table 34: Technical Notes

Visit www.micron.com to access the following documents.

Title	Reference Number
Password Protecting Flash Memory Blocks	TN-12-05
Software Driver for M29EW NOR Flash Memory	TN-13-12
Patching the Linux Kernel and U-Boot for Micron® M29 Flash Memory	TN-13-07

Micron Technology, Inc. reserves the right to change products or specifications without notice.
© 2012 Micron Technology, Inc. All rights reserved.

Downloaded from Arrow.com.

Revision History

Rev. E – 11/16

- Updated 56-pin dimension drawing
- Added Note 3 to 56-pin dimension drawing

Rev. D – 07/15

- Added a note in General Description about the 2Gb device usage.

Rev. C – 09/14

- Changed V_{CCQ} value to 1.65–V_{CC} in Feature
- Deleted note 1 of table 2: Standard Part Numbers by Density, Medium, and Package
- Deleted note 1 of table 3: Part Numbers with Security Features by Density, Medium, and Package
- Changed A26 to RFU in figure 4: 56-Pin TSOP
- Added note 6 to figure 5: 64-Ball Fortified BGA
- Added DNU and NC in table 4: Signal Descriptions
- Revised typo at STANDBY in table 6: Bus Operations
- Changed title from Status Register to Data Polling Register
- Changed description of note 2 of table 7: Data Polling Register Bit Definitions
- Revised typo at BLANK CHECK Error in table 8: Operations and Corresponding Bit Settings
- Changed figure 9: Lock Register Program Flowchart
- Revised typo at READ CFI and AUTO SELECT in table 10: Standard Command Definitions
- Changed note 1 and note 8 of table 10: Standard Command Definitions
- Changed description in Erase Operations, BLANK CHECK Operation, and Protection Operations
- Added PROGRAM EXTENDED MEMORY BLOCK and READ EXTENDED MEMORY BLOCK in EXTENDED MEMORY BLOCK Operations, table 13: Block Protection Command Definitions
- Changed note 1 of table 13: Block Protection Command Definitions
- Changed title of figure 12 from Program/Erase Nonvolatile Protection Bit Algorithm to Set/Clear Nonvolatile Protection Bit Algorithm Flowchart
- Changed figure 12
- Changed description in Hardware Protection and Nonvolatile Protection Mode, Device Protection
- Added note 4 to table 16: Block Protection Status, Block protection status is checked under AUTO SELECT mode
- Changed note 1 of table 22: Power-Up Specifications
- Added note 3 to table 22: Power-Up Specifications
- Deleted Input/output voltage from table 24: Absolute Maximum/Minimum Ratings
- Changed V_{CC} and V_{CCQ} in table 24: Absolute Maximum/Minimum Ratings
- Revised typo at ^{t}CE, ^{t}OH, ^{t}ELFL, and ^{t}ELFH in table 29: Read AC Characteristics

Micron Technology, Inc. reserves the right to change products or specifications without notice.
© 2012 Micron Technology, Inc. All rights reserved.

Downloaded from Arrow.com.

- Added parameter ^{t}OPH to table 32: Accelerated Program and Data Polling/Data Toggle AC Characteristics
- Changed figure 31: 56-Pin TSOP – 14mm x 20mm
- Added note 2 to figure 32: 64-Ball Fortified BGA – 11mm x 13mm

Rev. B – 08/12

- Added Table 3: Part Numbers with Security Features by Density, Medium, and Package
- Updated Table 8: Operations and Corresponding Bit Settings

Rev. A – 04/12

- Initial Micron brand release

8000 S. Federal Way, P.O. Box 6, Boise, ID 83707-0006, Tel: 208-368-4000
www.micron.com/products/support Sales inquiries: 800-932-4992
Micron and the Micron logo are trademarks of Micron Technology, Inc.
All other trademarks are the property of their respective owners.
This data sheet contains minimum and maximum limits specified over the power supply and temperature range set forth herein. Although considered final, these specifications are subject to change, as further product development and data characterization sometimes occur.

Micron Technology, Inc. reserves the right to change products or specifications without notice.
© 2012 Micron Technology, Inc. All rights reserved.

Downloaded from Arrow.com.