Document Number: MWE6IC9080N
Rev. 0, 4/2010

RoHS

RF LDMOS Wideband Integrated Power Amplifiers

MWE6IC9080NR1
MWE6IC9080GNR1
MWE6IC9080NBR1

865-960 MHz, 80 W CW, 28 V GSM, GSM EDGE RF LDMOS WIDEBAND INTEGRATED POWER AMPLIFIERS

The MWE6IC9080N wideband integrated circuit is designed with on-chip matching that makes it usable from 865 to 960 MHz. This multi-stage structure is rated for 26 to 32 Volt operation and covers all typical cellular base station modulations.

- Typical GSM Performance: V_{DD} = 28 Volts, I_{DQ1} = 230 mA, I_{DQ2} = 630 mA, P_{out} = 80 Watts CW

Frequency	G_{ps} (dB)	PAE (%)
920 MHz	29.0	49.7
940 MHz	28.8	51.6
960 MHz	28.5	52.3

- Capable of Handling 10:1 VSWR, @ 32 Vdc, 940 MHz, P_{out} = 128 Watts CW (3 dB Input Overdrive from Rated P_{out}), Designed for Enhanced Ruggedness
- Stable into a 5:1 VSWR. All Spurs Below -60 dBc @ 1 mW to 80 Watts CW P_{out}
- Typical P_{out} @ 1 dB Compression Point ≃ 90 Watts CW
- Typical GSM EDGE Performance: V_{DD} = 28 Volts, I_{DQ1} = 230 mA, I_{DQ2} = 630 mA, P_{out} = 35 Watts Avg.

Frequency	G_{ps} (dB)	PAE (%)	SR1 @ 400 kHz (dBc)	SR2 @ 600 kHz (dBc)	EVM (% rms)
920 MHz	30.0	37.0	-62	-75	0.8
940 MHz	30.0	37.8	-62	-75	1.2
960 MHz	29.5	38.0	-62	-75	1.5

CASE 1618-02
TO-270 WB-14
PLASTIC
MWE6IC9080NR1

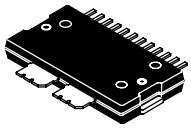

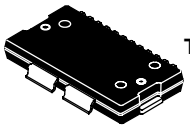

CASE 1621-02
TO-270 WB-14 GULL
PLASTIC
MWE6IC9080GNR1

CASE 1617-02
TO-272 WB-14
PLASTIC
MWE6IC9080NBR1

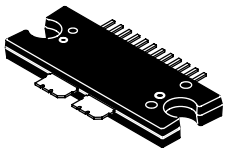

Features

- Characterized with Series Equivalent Large-Signal Impedance Parameters and Common Source Scattering Parameters
- On-Chip Matching (50 Ohm Input, DC Blocked)
- Integrated Quiescent Current Temperature Compensation with Enable/Disable Function (1)
- Integrated ESD Protection
- 225°C Capable Plastic Package
- RoHS Compliant
- In Tape and Reel. R1 Suffix = 500 Units per 44 mm, 13 inch Reel.

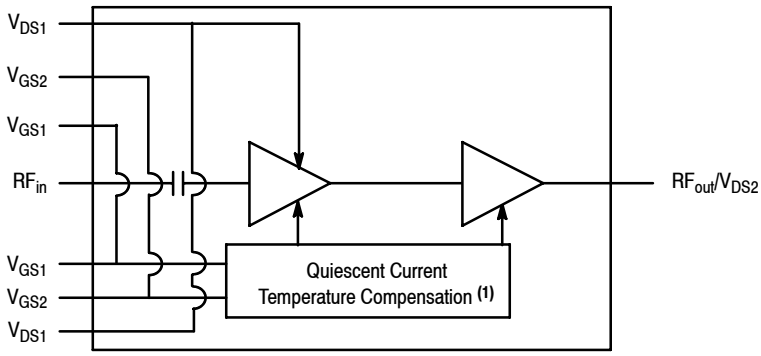

Figure 1. Functional Block Diagram

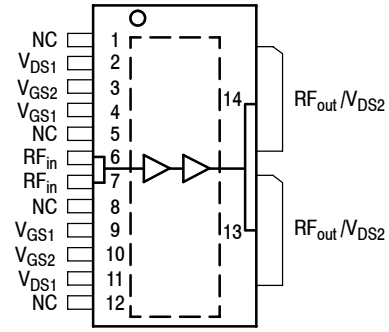

(Top View)

Note: Exposed backside of the package is the source terminal for the transistors.

Figure 2. Pin Connections

1. Refer to AN1977, *Quiescent Current Thermal Tracking Circuit in the RF Integrated Circuit Family* and to AN1987, *Quiescent Current Control for the RF Integrated Circuit Device Family*. Go to http://www.freescale.com/rf. Select Documentation/Application Notes - AN1977 or AN1987.

© Freescale Semiconductor, Inc., 2010. All rights reserved.

Downloaded from Arrow.com.

Table 1. Maximum Ratings

Rating	Symbol	Value	Unit
Drain-Source Voltage	V_{DSS}	-0.5, +66	Vdc
Gate-Source Voltage	V_{GS}	-0.5, +6	Vdc
Storage Temperature Range	T_{stg}	-65 to +150	°C
Case Operating Temperature	T_C	150	°C
Operating Junction Temperature [1,2]	T_J	225	°C
Input Power	P_{in}	20.5	dBm

Table 2. Thermal Characteristics

Characteristic		Symbol	Value [2,3]	Unit
Thermal Resistance, Junction to Case		$R_{\theta JC}$		°C/W
GSM Application				
(Case Temperature 80°C,	Stage 1, 28 Vdc, I_{DQ1} = 230 mA		3.5	
P_{out} = 80 W CW, 940 MHz)	Stage 2, 28 Vdc, I_{DQ2} = 630 mA		0.52	
GSM EDGE Application				
(Case Temperature 80°C,	Stage 1, 28 Vdc, I_{DQ1} = 230 mA		3.6	
P_{out} = 40 W CW, 940 MHz)	Stage 2, 28 Vdc, I_{DQ2} = 630 mA		0.54	

Table 3. ESD Protection Characteristics

Test Methodology	Class
Human Body Model (per JESD22-A114)	1B (Minimum)
Machine Model (per EIA/JESD22-A115)	A (Minimum)
Charge Device Model (per JESD22-C101)	III (Minimum)

Table 4. Moisture Sensitivity Level

Test Methodology	Rating	Package Peak Temperature	Unit
Per JESD22-A113, IPC/JEDEC J-STD-020	3	260	°C

Table 5. Electrical Characteristics (T_A = 25°C unless otherwise noted)

Characteristic	Symbol	Min	Typ	Max	Unit
Stage 1 — Off Characteristics					
Zero Gate Voltage Drain Leakage Current (V_{DS} = 66 Vdc, V_{GS} = 0 Vdc)	I_{DSS}	—	—	10	μAdc
Zero Gate Voltage Drain Leakage Current (V_{DS} = 28 Vdc, V_{GS} = 0 Vdc)	I_{DSS}	—	—	1	μAdc
Gate-Source Leakage Current (V_{GS} = 1.5 Vdc, V_{DS} = 0 Vdc)	I_{GSS}	—	—	1	μAdc
Stage 1 — On Characteristics					
Gate Threshold Voltage (V_{DS} = 10 Vdc, I_D = 33 μAdc)	$V_{GS(th)}$	1.5	2	3.5	Vdc
Gate Quiescent Voltage (V_{DS} = 28 Vdc, I_{DQ1} = 230 mAdc)	$V_{GS(Q)}$	—	2.7	—	Vdc
Fixture Gate Quiescent Voltage (V_{DD} = 28 Vdc, I_{DQ1} = 230 mAdc, Measured in Functional Test)	$V_{GG(Q)}$	15	17	19	Vdc

1. Continuous use at maximum temperature will affect MTTF.
2. MTTF calculator available at http://www.freescale.com/rf. Select Software & Tools/Development Tools/Calculators to access MTTF calculators by product.
3. Refer to AN1955, *Thermal Measurement Methodology of RF Power Amplifiers.* Go to http://www.freescale.com/rf. Select Documentation/Application Notes - AN1955.

(continued)

Downloaded from Arrow.com.

Table 5. Electrical Characteristics (T_A = 25°C unless otherwise noted) **(continued)**

Characteristic	Symbol	Min	Typ	Max	Unit
Stage 2 — Off Characteristics					
Zero Gate Voltage Drain Leakage Current (V_{DS} = 66 Vdc, V_{GS} = 0 Vdc)	I_{DSS}	—	—	10	μAdc
Zero Gate Voltage Drain Leakage Current (V_{DS} = 28 Vdc, V_{GS} = 0 Vdc)	I_{DSS}	—	—	1	μAdc
Gate-Source Leakage Current (V_{GS} = 1.5 Vdc, V_{DS} = 0 Vdc)	I_{GSS}	—	—	1	μAdc
Stage 2 — On Characteristics					
Gate Threshold Voltage (V_{DS} = 10 Vdc, I_D = 270 μAdc)	$V_{GS(th)}$	1.5	2	3.5	Vdc
Gate Quiescent Voltage (V_{DS} = 28 Vdc, I_{DQ2} = 630 mAdc)	$V_{GS(Q)}$	—	2.7	—	Vdc
Fixture Gate Quiescent Voltage (V_{DD} = 28 Vdc, I_{DQ2} = 630 mAdc, Measured in Functional Test)	$V_{GG(Q)}$	16.5	18.5	20.5	Vdc
Drain-Source On-Voltage (V_{GS} = 10 Vdc, I_D = 1 Adc)	$V_{DS(on)}$	0.1	0.45	0.8	Vdc
Functional Tests [1] (In Freescale Test Fixture, 50 ohm system) V_{DD} = 28 Vdc, P_{out} = 80 W CW, I_{DQ1} = 230 mA, I_{DQ2} = 630 mA, f = 960 MHz					
Power Gain	G_{ps}	27.0	28.5	30.5	dB
Power Added Efficiency	PAE	48.0	52.3	—	%
Input Return Loss	IRL	—	-28	-10	dB

Typical Broadband Performance (In Freescale Test Fixture, 50 ohm system) V_{DD} = 28 Vdc, P_{out} = 80 W CW, I_{DQ1} = 230 mA, I_{DQ2} = 630 mA

Frequency	G_{ps} (dB)	PAE (%)	IRL (dB)
920 MHz	29.0	49.7	-24
940 MHz	28.8	51.6	-28
960 MHz	28.5	52.3	-28

Typical Performances (In Freescale Test Fixture, 50 ohm system) V_{DD} = 28 Vdc, I_{DQ1} = 230 mA, I_{DQ2} = 630 mA, 920-960 MHz Bandwidth

Characteristic	Symbol	Min	Typ	Max	Unit
P_{out} @ 1 dB Compression Point, CW	P1dB	—	90	—	W
IMD Symmetry @ 100 W PEP, P_{out} where IMD Third Order Intermodulation ≅ 30 dBc (Delta IMD Third Order Intermodulation between Upper and Lower Sidebands > 2 dB)	IMD_{sym}	—	28	—	MHz
VBW Resonance Point (IMD Third Order Intermodulation Inflection Point)	VBW_{res}	—	30	—	MHz
Quiescent Current Accuracy over Temperature [2] with 4.12 kΩ Gate Feed Resistors (-30 to 85°C) Stage 1 Stage 2	ΔI_{QT}	—	 2.6 2.6	—	%
Gain Flatness in 40 MHz Bandwidth @ P_{out} = 80 W CW	G_F	—	0.7	—	dB
Gain Variation over Temperature (-30°C to +85°C)	ΔG	—	0.039	—	dB/°C
Output Power Variation over Temperature (-30°C to +85°C)	ΔP1dB	—	0.008	—	dBm/°C

1. Part internally matched both on input and output.
2. Refer to AN1977, *Quiescent Current Thermal Tracking Circuit in the RF Integrated Circuit Family* and to AN1987, *Quiescent Current Control for the RF Integrated Circuit Device Family*. Go to http://www.freescale.com/rf. Select Documentation/Application Notes - AN1977 or AN1987.

(continued)

Downloaded from Arrow.com.

Table 5. Electrical Characteristics (T_A = 25°C unless otherwise noted) **(continued)**

Typical GSM EDGE Performances (In Freescale GSM EDGE Test Fixture, 50 ohm system) V_{DD} = 28 Vdc, P_{out} = 35 W Avg., I_{DQ1} = 230 mA, I_{DQ2} = 630 mA, 920–960 MHz EDGE Modulation

Frequency	G_{ps} (dB)	PAE (%)	SR1 @ 400 kHz (dBc)	SR2 @ 600 kHz (dBc)	EVM (% rms)
920 MHz	30.0	37.0	-62	-75	0.8
940 MHz	30.0	37.8	-62	-75	1.2
960 MHz	29.5	38.0	-62	-75	1.5

Downloaded from Arrow.com.

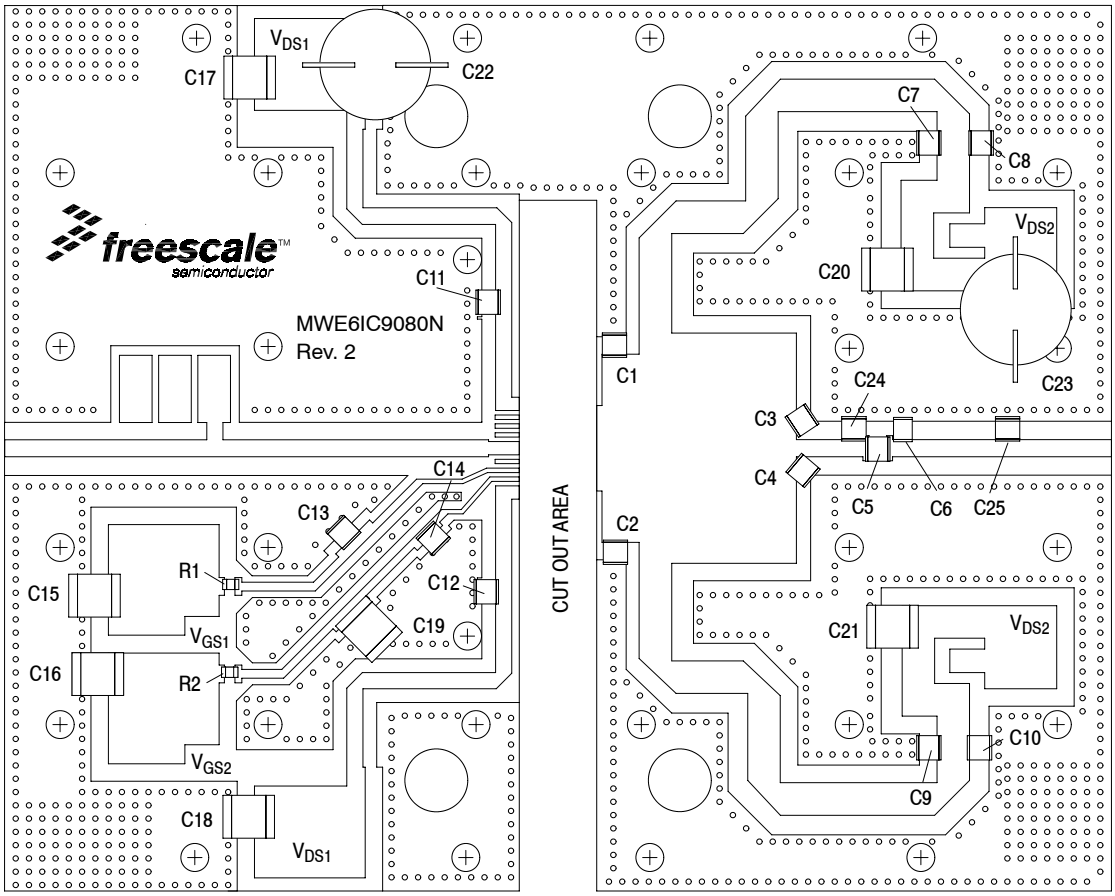

*C6 is mounted vertically.

Figure 3. MWE6IC9080NR1(GNR1)(NBR1) Test Circuit Component Layout

Table 6. MWE6IC9080NR1(GNR1)(NBR1) Test Circuit Component Designations and Values

Part	Description	Part Number	Manufacturer
C1, C2	6.8 pF Chip Capacitors	ATC100B6R8CT500XT	ATC
C3, C4	4.7 pF Chip Capacitors	ATC100B4R7CT500XT	ATC
C5, C7, C8, C9, C10, C11, C12, C13, C14	33 pF Chip Capacitors	ATC100B330JT500XT	ATC
C6	4.3 pF Chip Capacitor	ATC100B4R3CT500XT	ATC
C15, C16, C17, C18, C19, C20, C21	10 μF, 50 V Chip Capacitors	GRM55DR61H106KA88L	Murata
C22, C23	470 μF, 63 V Electrolytic Capacitors, Radial	MCGPR63V477M13X26-RH	Multicomp
C24	0.1 pF Chip Capacitor	ATC100B0R1BT500XT	ATC
C25	1.0 pF Chip Capacitor	ATC100B1R0BT500XT	ATC
R1, R2	4.12 KΩ, 1/4 W Chip Resistors	CRCW12064K12FKEA	Vishay
PCB	0.030″, ε_r = 2.8	IS680–280	Isola

Downloaded from Arrow.com.

TYPICAL CHARACTERISTICS

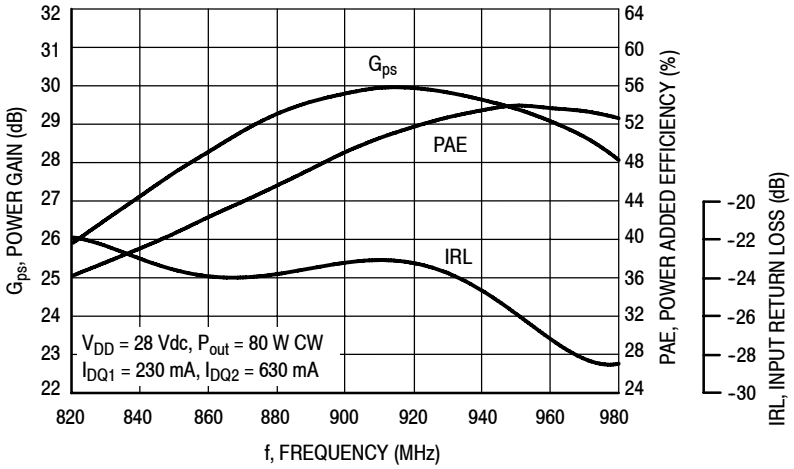

Figure 4. Power Gain, Input Return Loss and Power Added Efficiency versus Frequency @ P_{out} = 80 Watts CW

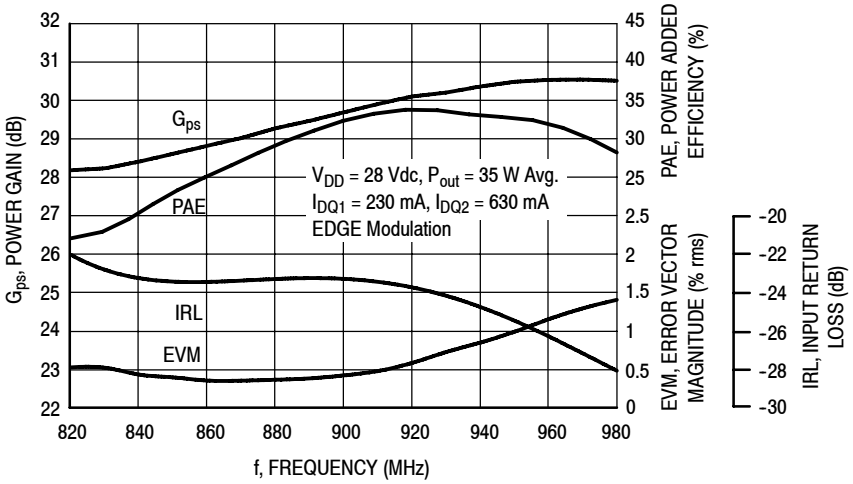

Figure 5. Power Gain, Input Return Loss, EVM and Power Added Efficiency versus Frequency @ P_{out} = 35 Watts Avg.

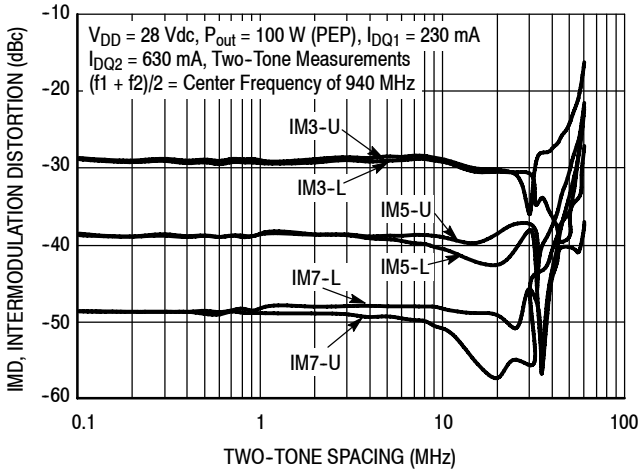

Figure 6. Intermodulation Distortion Products versus Two-Tone Spacing

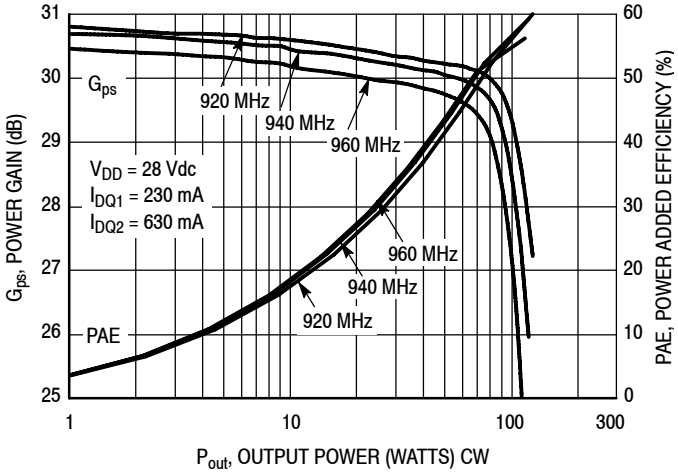

Figure 7. Power Gain and Power Added Efficiency versus Output Power

Downloaded from Arrow.com.

TYPICAL CHARACTERISTICS

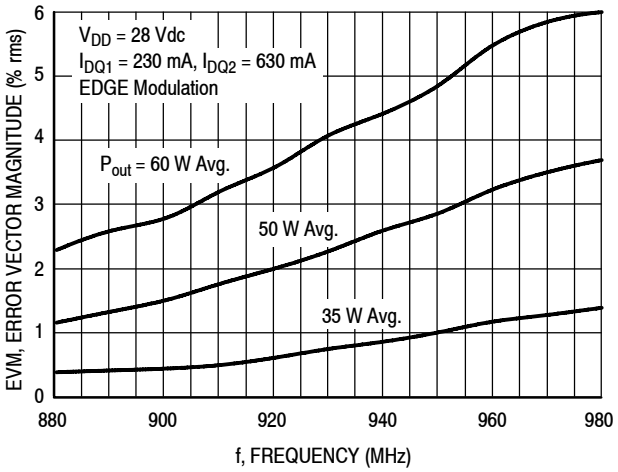

Figure 8. EVM versus Frequency

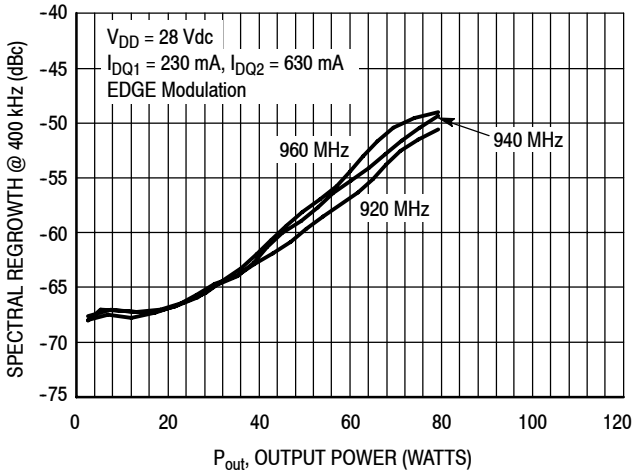

Figure 9. Spectral Regrowth at 400 kHz versus Output Power

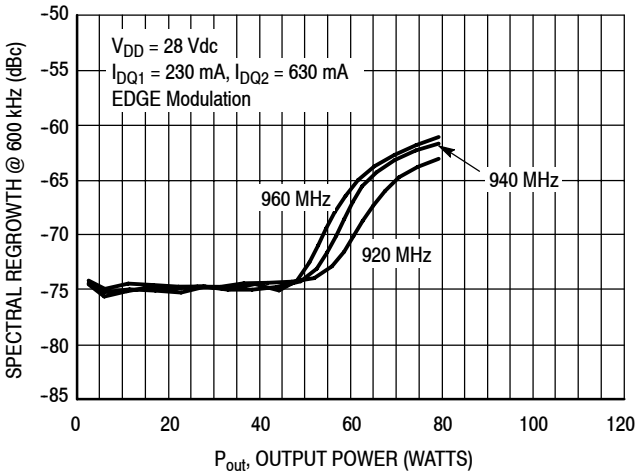

Figure 10. Spectral Regrowth at 600 kHz versus Output Power

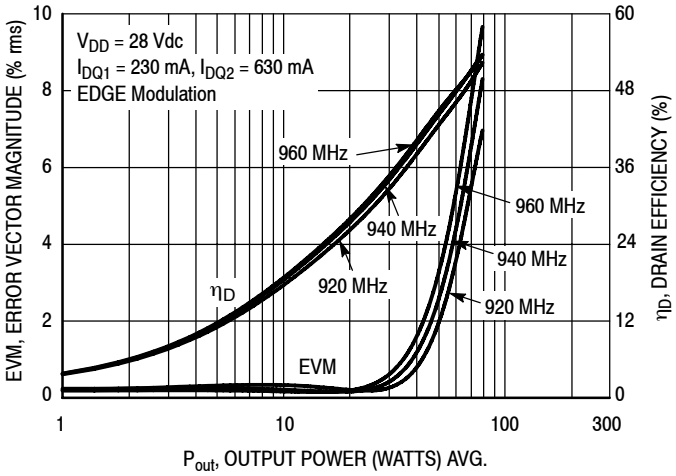

Figure 11. EVM and Drain Efficiency versus Output Power

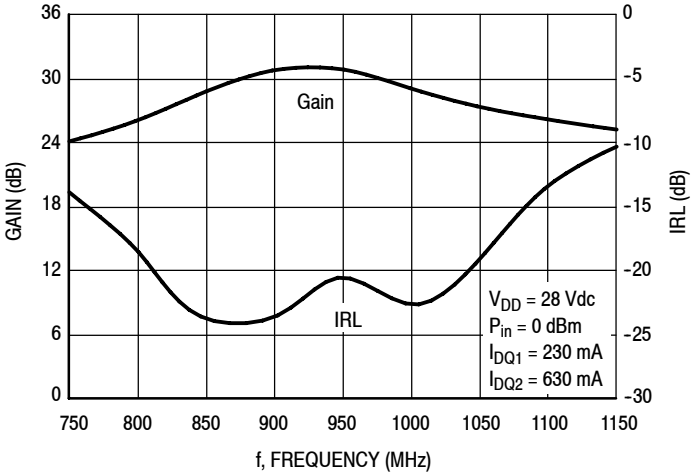

Figure 12. Broadband Frequency Response

Downloaded from Arrow.com.

GSM TEST SIGNAL

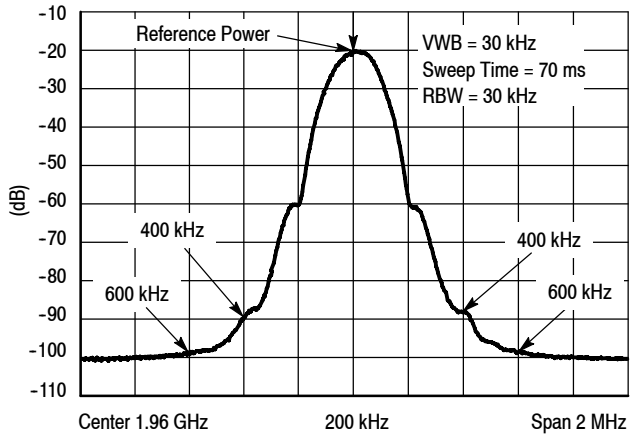

Figure 13. EDGE Spectrum

V_{DD} = 28 Vdc, I_{DQ1} = 230 mA, I_{DQ2} = 630 mA, P_{out} = 80 W CW

f MHz	Z_{in} Ω	Z_{load} Ω
820	56.91 – j7.34	1.22 – j0.47
840	52.38 – j6.36	1.26 – j0.26
860	49.30 – j5.92	1.35 – j0.58
880	45.68 – j4.07	1.44 + j0.14
900	44.22 – j2.13	1.54 + j0.33
920	42.43 – j0.62	1.62 + j0.49
940	41.50 + j1.76	1.74 + j0.66
960	42.19 + j3.25	1.91 + j0.82
980	43.07 + j3.14	2.08 + j0.94

Z_{in} = Device input impedance as measured from gate to ground.

Z_{load} = Test circuit impedance as measured from drain to ground.

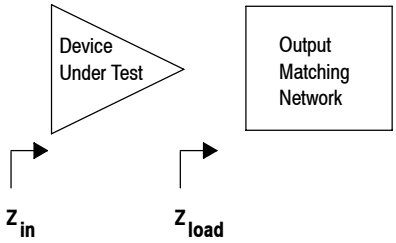

Figure 14. Series Equivalent Input and Load Impedance

Downloaded from Arrow.com.

PACKAGE DIMENSIONS

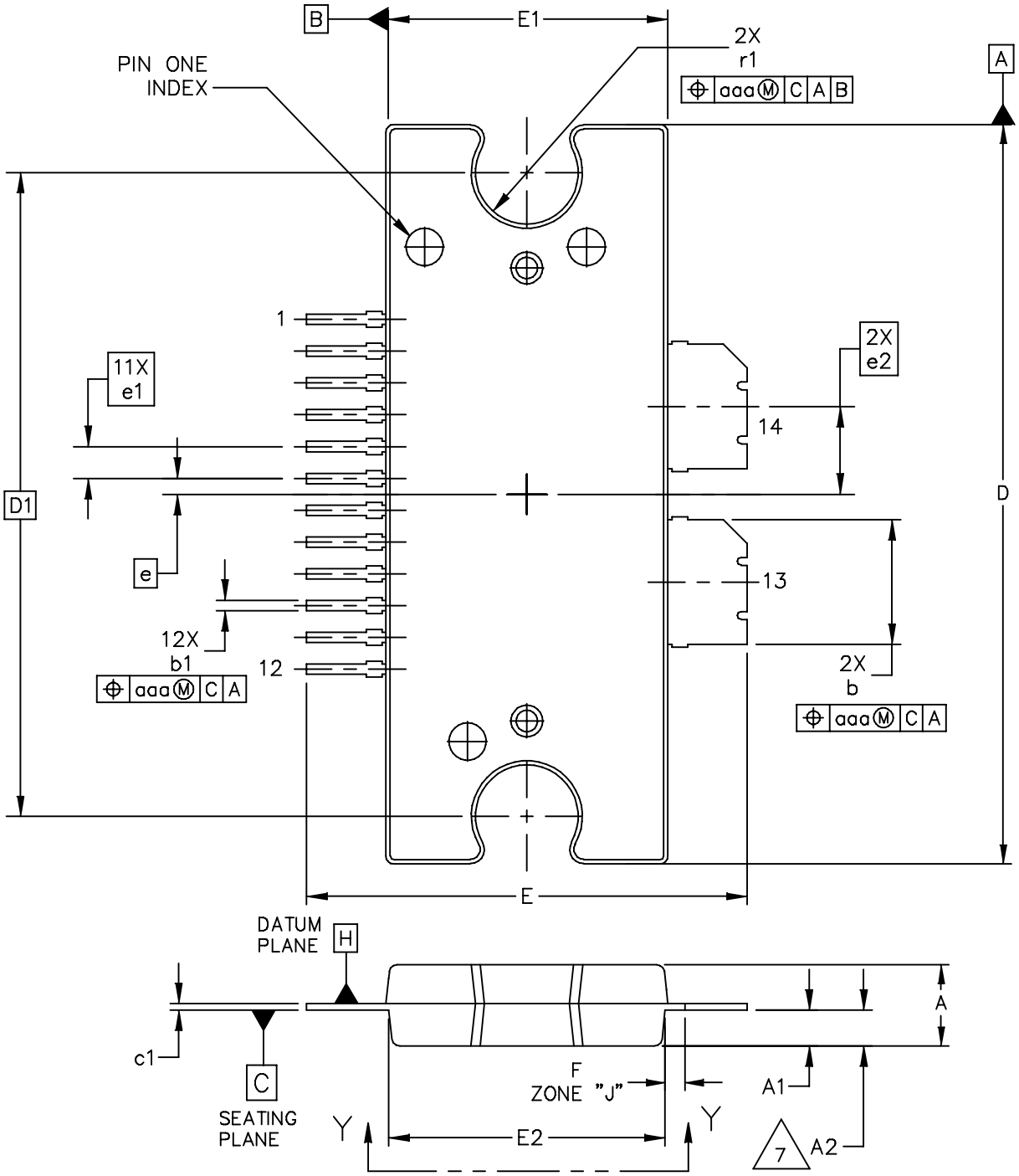

© FREESCALE SEMICONDUCTOR, INC. ALL RIGHTS RESERVED.	MECHANICAL OUTLINE	PRINT VERSION NOT TO SCALE
TITLE: TO-272 WIDE BODY 14 LEAD	DOCUMENT NO: 98ASA10649D	REV: A
	CASE NUMBER: 1617-02	27 JUN 2007
	STANDARD: NON-JEDEC	

Downloaded from Arrow.com.

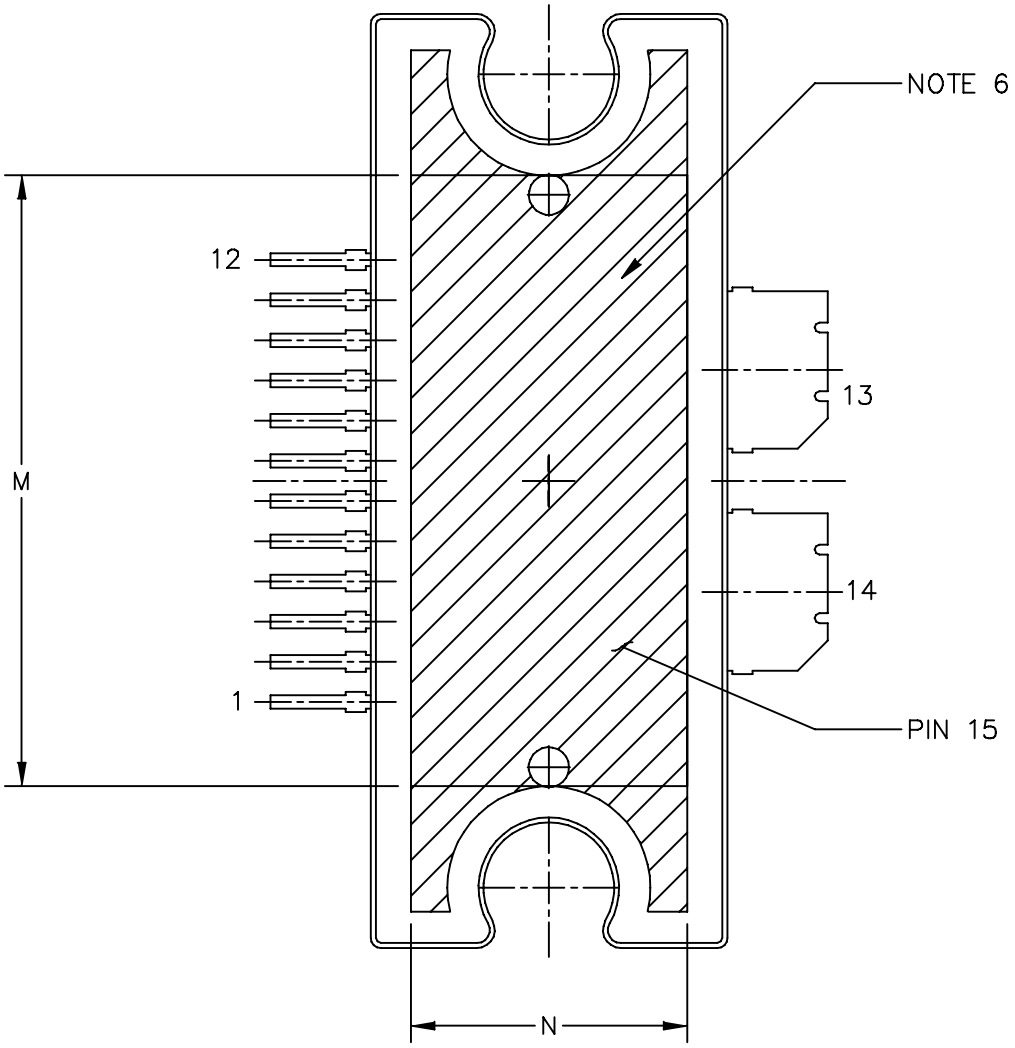

VIEW Y–Y

© FREESCALE SEMICONDUCTOR, INC. ALL RIGHTS RESERVED.	MECHANICAL OUTLINE	PRINT VERSION NOT TO SCALE
TITLE: TO–272 WIDE BODY 14 LEAD	DOCUMENT NO: 98ASA10649D	REV: A
	CASE NUMBER: 1617–02	27 JUN 2007
	STANDARD: NON–JEDEC	

Downloaded from Arrow.com.

NOTES:

1. CONTROLLING DIMENSION: INCH

2. INTERPRET DIMENSIONS AND TOLERANCES PER ASME Y14.5M-1994.

3. DATUM PLANE -H- IS LOCATED AT THE TOP OF LEAD AND IS COINCIDENT WITH THE LEAD WHERE THE LEAD EXITS THE PLASTIC BODY AT THE TOP OF THE PARTING LINE.

4. DIMENSIONS "D" AND "E1" DO NOT INCLUDE MOLD PROTRUSION. ALLOWABLE PROTRUSION IS .006 (0.15) PER SIDE. DIMENSIONS "D" AND "E1" DO INCLUDE MOLD MISMATCH AND ARE DETERMINED AT DATUM PLANE -H-.

5. DIMENSIONS "b" AND "b1" DO NOT INCLUDE DAMBAR PROTRUSION. ALLOWABLE DAMBAR PROTRUSION SHALL BE .005 (0.13) TOTAL IN EXCESS OF THE "b" AND "b1" DIMENSIONS AT MAXIMUM MATERIAL CONDITION.

6. HATCHING REPRESENTS THE EXPOSED AREA OFTHE HEAT SLUG.

7. DIM A2 APPLIES WITHIN ZONE "J" ONLY.

DIM	INCH MIN	INCH MAX	MILLIMETER MIN	MILLIMETER MAX	DIM	INCH MIN	INCH MAX	MILLIMETER MIN	MILLIMETER MAX
A	.100	.104	2.54	2.64	b	.154	.160	3.91	4.06
A1	.039	.043	0.99	1.09	b1	.010	.016	0.25	0.41
A2	.040	.042	1.02	1.07	c1	.007	.011	0.18	0.28
D	.928	.932	23.57	23.67	e	.020 BSC		0.51 BSC	
D1	.810 BSC		20.57 BSC		e1	.040 BSC		1.02 BSC	
E	.551	.559	14.00	14.20	e2	.1105 BSC		2.807 BSC	
E1	.353	.357	8.97	9.07	r1	.063	.068	1.6	1.73
E2	.346	.350	8.79	8.89					
F	.025 BSC		0.64 BSC		aaa	.004		0.10	
M	.600	----	15.24	----					
N	.270	----	6.86	----					

© FREESCALE SEMICONDUCTOR, INC.
ALL RIGHTS RESERVED.

MECHANICAL OUTLINE | PRINT VERSION NOT TO SCALE

TITLE:	DOCUMENT NO: 98ASA10649D	REV: A
TO-272 WIDE BODY 14 LEAD	CASE NUMBER: 1617-02	27 JUN 2007
	STANDARD: NON-JEDEC	

Downloaded from Arrow.com.

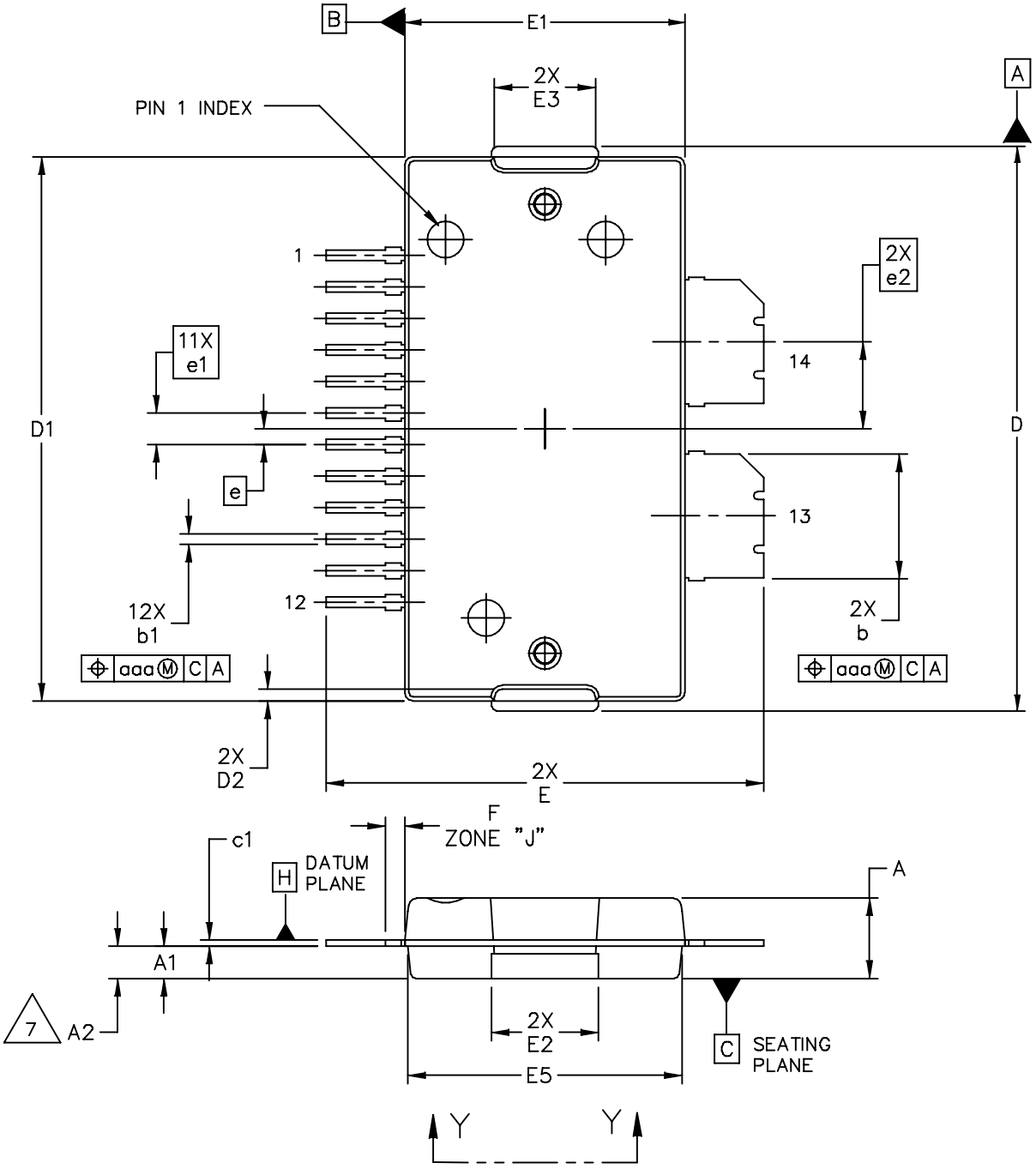

© FREESCALE SEMICONDUCTOR, INC. ALL RIGHTS RESERVED.	MECHANICAL OUTLINE	PRINT VERSION NOT TO SCALE
TITLE: TO-270 WIDE BODY 14 LEAD	DOCUMENT NO: 98ASA10650D	REV: A
	CASE NUMBER: 1618-02	19 JUN 2007
	STANDARD: NON-JEDEC	

Downloaded from Arrow.com.

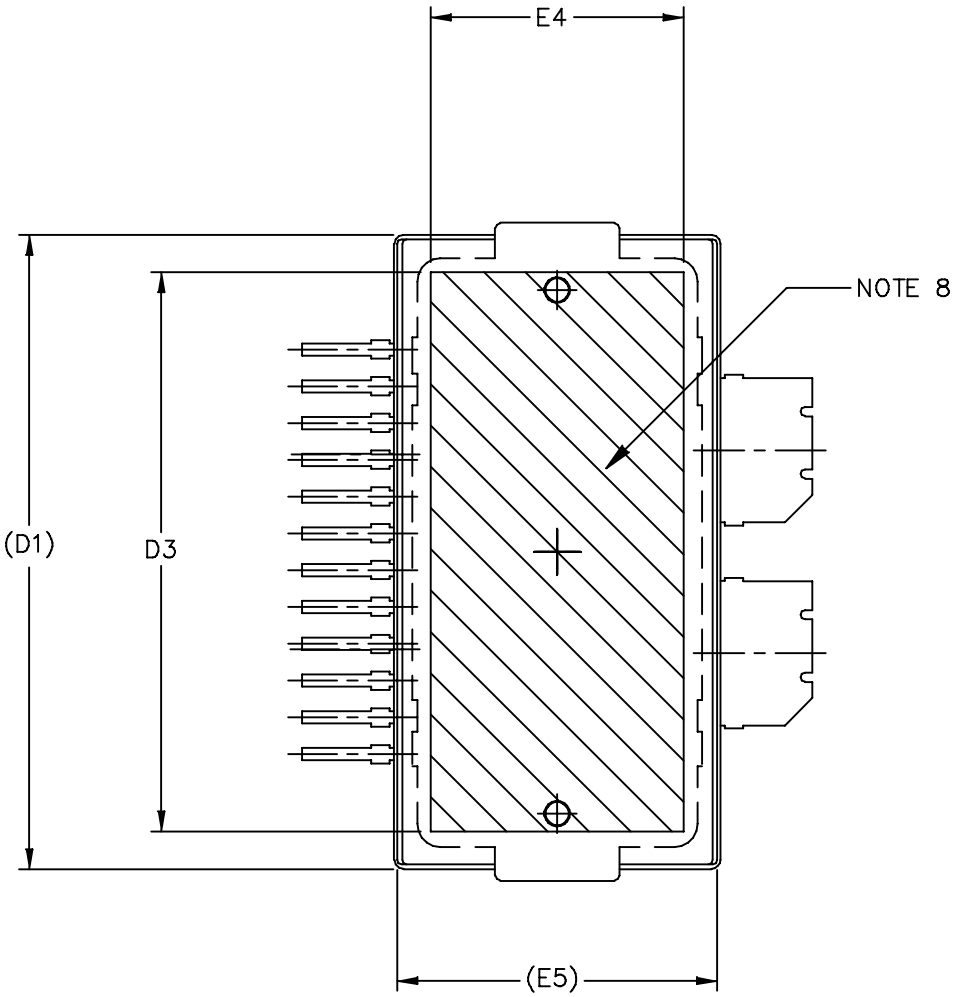

VIEW Y–Y

© FREESCALE SEMICONDUCTOR, INC. ALL RIGHTS RESERVED.	MECHANICAL OUTLINE	PRINT VERSION NOT TO SCALE
TITLE: TO–270 WIDE BODY 14 LEAD	DOCUMENT NO: 98ASA10650D	REV: A
	CASE NUMBER: 1618–02	19 JUN 2007
	STANDARD: NON–JEDEC	

Downloaded from Arrow.com.

NOTES:

1. CONTROLLING DIMENSION: INCH
2. INTERPRET DIMENSIONS AND TOLERANCES PER ASME Y14.5M–1994.
3. DATUM PLANE –H– IS LOCATED AT THE TOP OF LEAD AND IS COINCIDENT WITH THE LEAD WHERE THE LEAD EXITS THE PLASTIC BODY AT THE TOP OF THE PARTING LINE.
4. DIMENSIONS "D" AND "E1" DO NOT INCLUDE MOLD PROTRUSION. ALLOWABLE PROTRUSION IS .006 PER SIDE. DIMENSIONS "D" AND "E1" DO INCLUDE MOLD MISMATCH AND ARE DETERMINED AT DATUM PLANE –H–.
5. DIMENSIONS "b" AND "b1" DOES NOT INCLUDE DAMBAR PROTRUSION. ALLOWABLE DAMBAR PROTRUSION SHALL BE .005 TOTAL IN EXCESS OF THE "b" AND "b1" DIMENSION AT MAXIMUM MATERIAL CONDITION.
6. DATUMS –A– AND –B– TO BE DETERMINED AT DATUM PLANE –H–.
7. DIMENSION A2 APPLIES WITHIN ZONE "J" ONLY.
8. HATCHING REPRESENTS THE EXPOSED AREA OF THE HEAT SLUG.

	INCH		MILLIMETER			INCH		MILLIMETER	
DIM	MIN	MAX	MIN	MAX	DIM	MIN	MAX	MIN	MAX
A	.100	.104	2.54	2.64	F	.025 BSC		0.64 BSC	
A1	.039	.043	0.99	1.09	b	.154	.160	3.91	4.06
A2	.040	.042	1.02	1.07	b1	.010	.016	0.25	0.41
D	.712	.720	18.08	18.29	c1	.007	.011	.18	.28
D1	.688	.692	17.48	17.58	e	.020 BSC		0.51 BSC	
D2	.011	.019	0.28	0.48	e1	.040 BSC		1.02 BSC	
D3	.600	---	15.24	---	e2	.1105 BSC		2.807 BSC	
E	.551	.559	14	14.2					
E1	.353	.357	8.97	9.07	aaa	.004		.10	
E2	.132	.140	3.35	3.56					
E3	.124	.132	3.15	3.35					
E4	.270	---	6.86	---					
E5	.346	.350	8.79	8.89					

© FREESCALE SEMICONDUCTOR, INC.
ALL RIGHTS RESERVED.

MECHANICAL OUTLINE | PRINT VERSION NOT TO SCALE

TITLE: TO–270 WIDE BODY 14 LEAD

DOCUMENT NO: 98ASA10650D | REV: A

CASE NUMBER: 1618–02 | 19 JUN 2007

STANDARD: NON–JEDEC

Downloaded from Arrow.com.

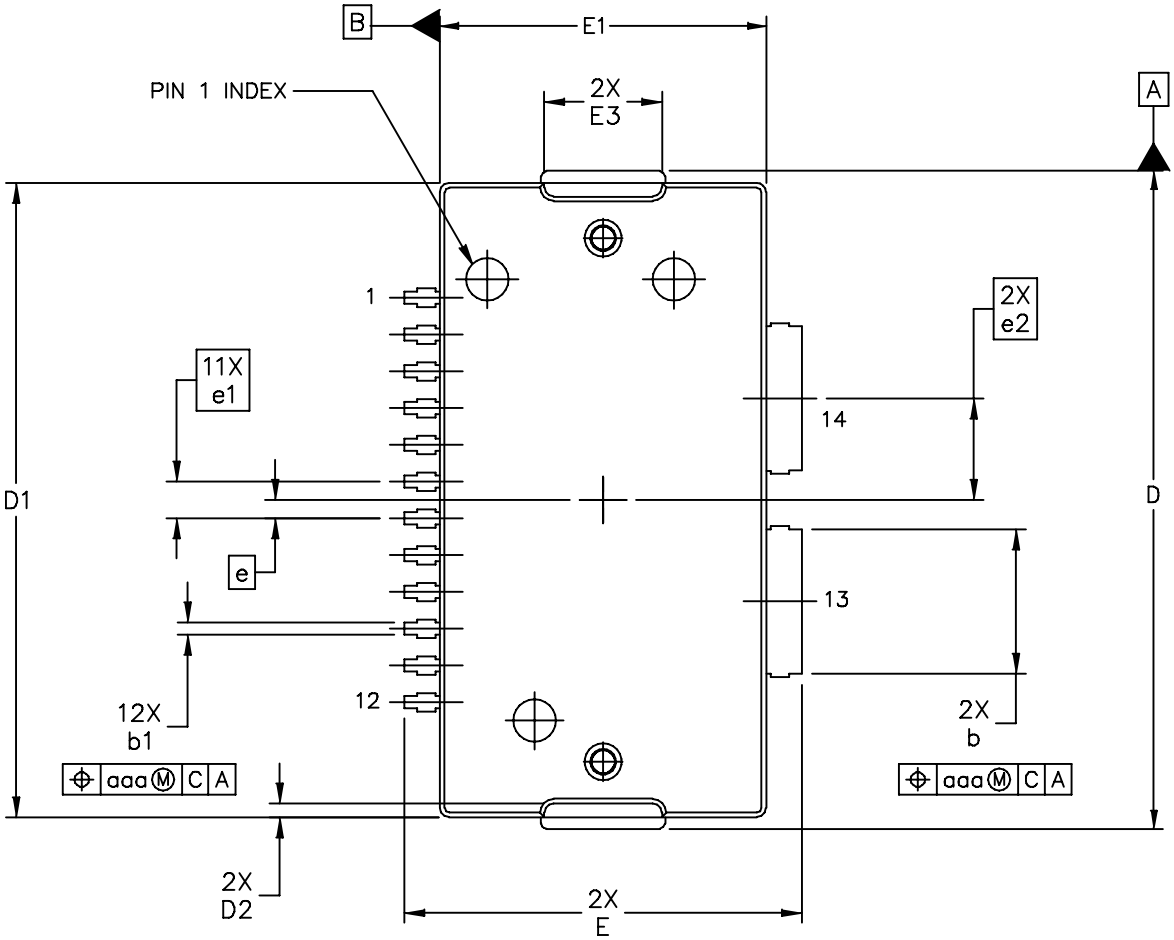

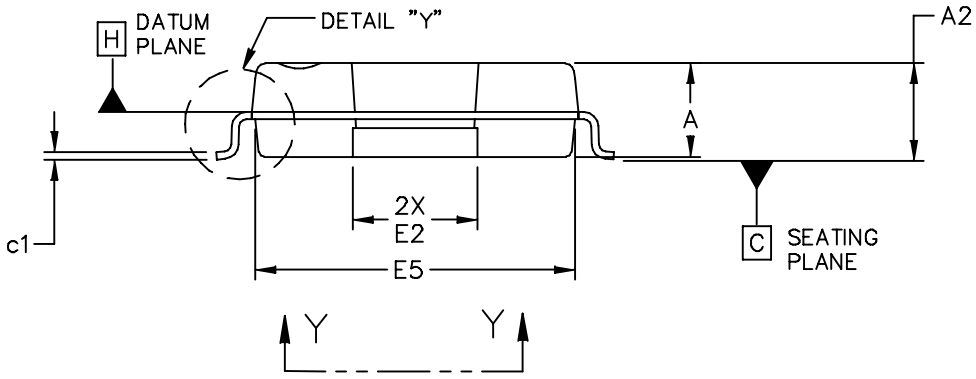

© FREESCALE SEMICONDUCTOR, INC. ALL RIGHTS RESERVED.	MECHANICAL OUTLINE	PRINT VERSION NOT TO SCALE
TITLE: TO-270 WIDE BODY 14 LEAD GULL WING	DOCUMENT NO: 98ASA10653D	REV: A
	CASE NUMBER: 1621-02	19 JUN 2007
	STANDARD: NON-JEDEC	

Downloaded from Arrow.com.

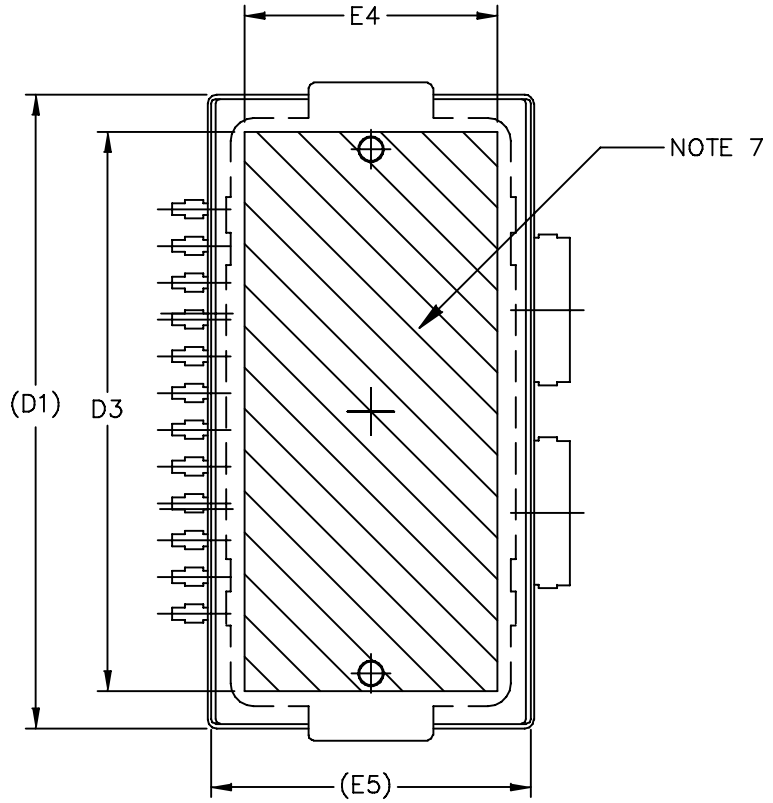

VIEW Y–Y

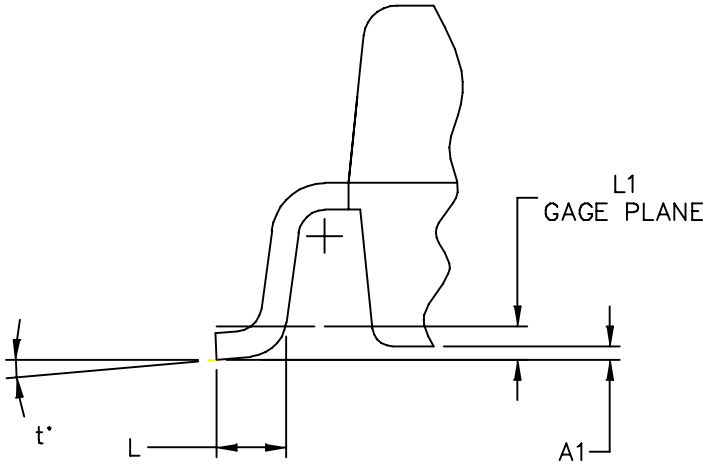

DETAIL "Y"

© FREESCALE SEMICONDUCTOR, INC. ALL RIGHTS RESERVED.	MECHANICAL OUTLINE	PRINT VERSION NOT TO SCALE
TITLE: TO–270 WIDE BODY 14 LEAD GULL WING	DOCUMENT NO: 98ASA10653D	REV: A
	CASE NUMBER: 1621–02	19 JUN 2007
	STANDARD: NON–JEDEC	

Downloaded from Arrow.com.

NOTES:

1. CONTROLLING DIMENSION: INCH
2. INTERPRET DIMENSIONS AND TOLERANCES PER ASME Y14.5M–1994.
3. DATUM PLANE –H– IS LOCATED AT THE TOP OF LEAD AND IS COINCIDENT WITH THE LEAD WHERE THE LEAD EXITS THE PLASTIC BODY AT THE TOP OF THE PARTING LINE.
4. DIMENSIONS "D" AND "E1" DO NOT INCLUDE MOLD PROTRUSION. ALLOWABLE PROTRUSION IS .006 PER SIDE. DIMENSIONS "D" AND "E1" DO INCLUDE MOLD MISMATCH AND ARE DETERMINED AT DATUM PLANE –H–.
5. DIMENSIONS "b" AND "b1" DOES NOT INCLUDE DAMBAR PROTRUSION. ALLOWABLE DAMBAR PROTRUSION SHALL BE .005 TOTAL IN EXCESS OF THE "b" AND "b1" DIMENSION AT MAXIMUM MATERIAL CONDITION.
6. DATUMS –A– AND –B– TO BE DETERMINED AT DATUM PLANE –H–.
7. HATCHING REPRESENTS THE EXPOSED AREA OF THE HEAT SLUG.

	INCH		MILLIMETER			INCH		MILLIMETER	
DIM	MIN	MAX	MIN	MAX	DIM	MIN	MAX	MIN	MAX
A	.100	.104	2.54	2.64	L	.018	.024	0.46	0.61
A1	.001	.004	0.02	0.10	L1	.010 BSC		0.25 BSC	
A2	.099	.110	2.51	2.79	b	.154	.160	3.91	4.06
D	.712	.720	18.08	18.29	b1	.010	.016	0.25	0.41
D1	.688	.692	17.48	17.58	c1	.007	.011	.18	.28
D2	.011	.019	0.28	0.48	e	.020 BSC		0.51 BSC	
D3	.600	---	15.24	---	e1	.040 BSC		1.02 BSC	
E	.429	.437	10.9	11.1	e2	.1105 BSC		2.807 BSC	
E1	.353	.357	8.97	9.07	t	2°	8°	2°	8°
E2	.132	.140	3.35	3.56					
E3	.124	.132	3.15	3.35	aaa	.004		.10	
E4	.270	---	6.86	---					
E5	.346	.350	8.79	8.89					

© FREESCALE SEMICONDUCTOR, INC.
ALL RIGHTS RESERVED.

MECHANICAL OUTLINE | PRINT VERSION NOT TO SCALE

TITLE: TO–270 WIDE BODY
14 LEAD
GULL WING

DOCUMENT NO: 98ASA10653D | REV: A

CASE NUMBER: 1621–02 | 19 JUN 2007

STANDARD: NON–JEDEC

Downloaded from Arrow.com.

PRODUCT DOCUMENTATION AND SOFTWARE

Refer to the following documents to aid your design process.

Application Notes

- AN1907: Solder Reflow Attach Method for High Power RF Devices in Plastic Packages
- AN1955: Thermal Measurement Methodology of RF Power Amplifiers
- AN1977: Quiescent Current Thermal Tracking Circuit in the RF Integrated Circuit Family
- AN1987: Quiescent Current Control for the RF Integrated Circuit Device Family
- AN3263: Bolt Down Mounting Method for High Power RF Transistors and RFICs in Over-Molded Plastic Packages
- AN3789: Clamping of High Power RF Transistors and RFICs in Over-Molded Plastic Packages

Engineering Bulletins

- EB212: Using Data Sheet Impedances for RF LDMOS Devices

Software

- Electromigration MTTF Calculator
- RF High Power Model
- .s2p File

For Software, do a Part Number search at http://www.freescale.com, and select the “Part Number” link. Go to the Software & Tools tab on the part’s Product Summary page to download the respective tool.

REVISION HISTORY

The following table summarizes revisions to this document.

Revision	Date	Description
0	Apr. 2010	• Initial Release of Data Sheet

Downloaded from Arrow.com.

How to Reach Us:

Home Page:
www.freescale.com

Web Support:
http://www.freescale.com/support

USA/Europe or Locations Not Listed:
Freescale Semiconductor, Inc.
Technical Information Center, EL516
2100 East Elliot Road
Tempe, Arizona 85284
1-800-521-6274 or +1-480-768-2130
www.freescale.com/support

Europe, Middle East, and Africa:
Freescale Halbleiter Deutschland GmbH
Technical Information Center
Schatzbogen 7
81829 Muenchen, Germany
+44 1296 380 456 (English)
+46 8 52200080 (English)
+49 89 92103 559 (German)
+33 1 69 35 48 48 (French)
www.freescale.com/support

Japan:
Freescale Semiconductor Japan Ltd.
Headquarters
ARCO Tower 15F
1-8-1, Shimo-Meguro, Meguro-ku,
Tokyo 153-0064
Japan
0120 191014 or +81 3 5437 9125
support.japan@freescale.com

Asia/Pacific:
Freescale Semiconductor China Ltd.
Exchange Building 23F
No. 118 Jianguo Road
Chaoyang District
Beijing 100022
China
+86 10 5879 8000
support.asia@freescale.com

For Literature Requests Only:
Freescale Semiconductor Literature Distribution Center
1-800-441-2447 or +1-303-675-2140
Fax: +1-303-675-2150
LDCForFreescaleSemiconductor@hibbertgroup.com

Information in this document is provided solely to enable system and software implementers to use Freescale Semiconductor products. There are no express or implied copyright licenses granted hereunder to design or fabricate any integrated circuits or integrated circuits based on the information in this document.

Freescale Semiconductor reserves the right to make changes without further notice to any products herein. Freescale Semiconductor makes no warranty, representation or guarantee regarding the suitability of its products for any particular purpose, nor does Freescale Semiconductor assume any liability arising out of the application or use of any product or circuit, and specifically disclaims any and all liability, including without limitation consequential or incidental damages. “Typical” parameters that may be provided in Freescale Semiconductor data sheets and/or specifications can and do vary in different applications and actual performance may vary over time. All operating parameters, including “Typicals”, must be validated for each customer application by customer’s technical experts. Freescale Semiconductor does not convey any license under its patent rights nor the rights of others. Freescale Semiconductor products are not designed, intended, or authorized for use as components in systems intended for surgical implant into the body, or other applications intended to support or sustain life, or for any other application in which the failure of the Freescale Semiconductor product could create a situation where personal injury or death may occur. Should Buyer purchase or use Freescale Semiconductor products for any such unintended or unauthorized application, Buyer shall indemnify and hold Freescale Semiconductor and its officers, employees, subsidiaries, affiliates, and distributors harmless against all claims, costs, damages, and expenses, and reasonable attorney fees arising out of, directly or indirectly, any claim of personal injury or death associated with such unintended or unauthorized use, even if such claim alleges that Freescale Semiconductor was negligent regarding the design or manufacture of the part.

Freescale™ and the Freescale logo are trademarks of Freescale Semiconductor, Inc.
All other product or service names are the property of their respective owners.
© Freescale Semiconductor, Inc. 2010. All rights reserved.

Document Number: MWE6IC9080N
Rev. 0, 4/2010

Downloaded from Arrow.com.