DS0141

Datasheet

PolarFire

Production

June 2019

Microsemi

a Microchip company

Contents

1 Revision History 1
1.1 Revision 1.6 1
1.2 Revision 1.5 1
1.3 Revision 1.4 1
1.4 Revision 1.3 1
1.5 Revision 1.2 2
1.6 Revision 1.1 2
1.7 Revision 1.0 2

2 Overview 3

3 References 4

4 Device Offering 5

5 Silicon and Libero Tool Status 6

6 DC Characteristics 7
6.1 Absolute Maximum Rating 7
6.2 Recommended Operating Conditions 7
6.2.1 DC Characteristics over Recommended Operating Conditions 9
6.2.2 Maximum Allowed Overshoot and Undershoot 10
6.3 Input and Output 14
6.3.1 DC Input and Output Levels 14
6.3.2 Differential DC Input and Output Levels 16
6.3.3 Complementary Differential DC Input and Output Levels 19
6.3.4 HSIO On-Die Termination 21
6.3.5 GPIO On-Die Termination 22

7 AC Switching Characteristics 23
7.1 I/O Standards Specifications 23
7.1.1 Input Delay Measurement Methodology Maximum PHY Rate for Memory Interface IP 23
7.1.2 Output Delay Measurement Methodology 27
7.1.3 Input Buffer Speed 29
7.1.4 Output Buffer Speed 31
7.1.5 Maximum PHY Rate for Memory Interface IP 33
7.1.6 User I/O Switching Characteristics 34
7.2 Clocking Specifications 38
7.2.1 Clocking 38
7.2.2 PLL 39
7.2.3 DLL 41

7.2.4 RC Oscillators ... 42
7.3 Fabric Specifications ... 43
7.3.1 Math Blocks ... 43
7.3.2 SRAM Blocks ... 44
7.4 Transceiver Switching Characteristics ... 46
7.4.1 Transceiver Performance ... 46
7.4.2 Transceiver Reference Clock Performance ... 47
7.4.3 Transceiver Reference Clock I/O Standards ... 48
7.4.4 Transmitter Performance ... 49
7.4.5 Receiver Performance ... 55
7.4.6 Transceiver and Receiver Return Loss Characteristics ... 58
7.5 Transceiver Protocol Characteristics ... 59
7.5.1 PCI Express ... 59
7.5.2 Interlaken ... 60
7.5.3 10GbE (10GBASE-R and 10GBASE-KR) ... 60
7.5.4 1GbE (1000BASE-X) ... 61
7.5.5 SGMII and QSGMII ... 61
7.5.6 CPRI ... 62
7.5.7 JESD204B ... 62
7.5.8 Display Port ... 63
7.5.9 Serial RapidIO ... 63
7.5.10 SDI ... 64
7.5.11 OTN ... 64
7.5.12 Fiber Channel ... 65
7.5.13 HiGig and HiGig+ ... 65
7.5.14 HiGig II ... 65
7.6 Non-Volatile Characteristics ... 66
7.6.1 FPGA Programming Cycle and Retention ... 66
7.6.2 FPGA Programming Time ... 66
7.6.3 FPGA Bitstream Sizes ... 67
7.6.4 Digest Cycles ... 68
7.6.5 Digest Time ... 69
7.6.6 Zeroization Time ... 70
7.6.7 Verify Time ... 72
7.6.8 Authentication Time ... 73
7.6.9 Secure NVM Performance ... 74
7.6.10 Secure NVM Programming Cycles ... 74
7.7 System Services ... 75
7.7.1 System Services Throughput Characteristics ... 75
7.8 Fabric Macros ... 76
7.8.1 UJTAG Switching Characteristics ... 76

7.8.2 UJTAG_SEC Switching Characteristics 76
7.8.3 USPI Switching Characteristics 77
7.8.4 Tamper Detectors 78
7.8.5 System Controller Suspend Switching Characteristics 80
7.8.6 Dynamic Reconfiguration Interface 80
7.8.7 User Voltage Detector Characteristics 80
7.9 Power-Up to Functional Timing 81
7.9.1 Power-On (Cold) Reset Initialization Sequence 81
7.9.2 Warm Reset Initialization Sequence 82
7.9.3 Power-On Reset Voltages 82
7.9.4 User Design Dependence of Power-Up Times 83
7.9.5 Cold Reset to Fabric and I/Os (Low Speed) Functional 83
7.9.6 Warm Reset to Fabric and I/Os (Low Speed) Functional 84
7.9.7 Miscellaneous Initialization Parameters 84
7.9.8 I/O Calibration 85
7.10 Dedicated Pins 86
7.10.1 JTAG Switching Characteristics 86
7.10.2 SPI Switching Characteristics 86
7.10.3 SmartDebug Probe Switching Characteristics 87
7.10.4 DEVRST_N Switching Characteristics 87
7.11 User Crypto 87
7.11.1 TeraFire 5200B Switching Characteristics 87
7.11.2 TeraFire 5200B Throughput Characteristics 88

1 Revision History

The revision history describes the changes that were implemented in the document. The changes are listed by revision, starting with the most current publication.

1.1 Revision 1.6

Revision 1.6 was published in June 2019. The following is a summary of changes.

- The parameter RX_DDRX_B_G_FA (for Video7 applications) was added. For more information, see table I/O Digital Receive Double-Data Rate Switching Characteristics (see page 34).
- I/O CDR switching characteristics were added. For more information, see table I/O CDR Switching Characteristics (see page 37).
- High-speed I/O clock skew with bridging was added. For more information, see table High-Speed I/O Clock Characteristics (–40 °C to 100 °C) (see page 38).
- PCS and PMA minimum reset pulse widths were added. For more information, see table PolarFire Transceiver and TXPLL Performance (see page 46).
- Auto adaptive calibration was added to CDR lock times, Burst Mode Receiver (BMR) high-gain lock time, and BMR high-gain state time. For more information, see table PolarFire Transceiver Receiver Characteristics (see page 55).
- Fiber channel rates were corrected. For more information, see table Fiber Channel (see page 65).
- HiGig and HiGig+ specifications were updated. For more information, see table HiGig and HiGig+ (see page 65).
- HiGig II specifications were updated. For more information, see table HiGigII (see page 65).
- The DEVRST_N parameter was correctly classified as ramp time. For more information, see section Dedicated Pins (see page 86).
- Transmitter and receiver return loss characteristics were added. For more information, see section Transceiver Switching Characteristics (see page 46).
- Voltage detector specifications were added and the voltage glitch detector was removed. For more information, see section User Voltage Detector Characteristics (see page 80).

1.2 Revision 1.5

- All tables have been reviewed and updated to reflect production silicon characteristics for the 200T, 200TL, 200TS, 200TLS, 100T, 100TL, 100TS, and 100TLS devices in all packages, speed grades, and temperature grades.
- The maximum transceiver reference clock input rate was changed from 800 MHz to 400 MHz due to a typo in version 1.4. For more information, see table PolarFire Transceiver Reference Clock AC Requirements (see page 47).

1.3 Revision 1.4

Revision 1.4 was published September 2018. The following is a summary of changes.

- All tables have been reviewed and updated to reflect production silicon characteristics for the 300T, 300TL, 300TS, and 300TLS devices in all packages, speed grades, and temperature grades.

1.4 Revision 1.3

Revision 1.3 was published in June 2018. The following is a summary of changes.

- The System Services section was updated. For more information, see System Services (see page 75).
- The Non-Volatile Characteristics section was updated. For more information, see Non-Volatile Characteristics (see page 66).

- The Fabric Macros section was updated. For more information, see Fabric Macros (see page 76).
- The Transceiver Switching Characteristics section was updated. For more information, see Transceiver Switching Characteristics (see page 46).

1.5 Revision 1.2

Revision 1.2 was published in June 2018. The following is a summary of changes.

- The datasheet has moved to preliminary status. Every table has been updated.

1.6 Revision 1.1

Revision 1.1 was published in August 2017. The following is a summary of changes.

- LVDS specifications changed to 1.25G. For more information, see HSIO Maximum Input Buffer Speed and HSIO Maximum Output Buffer Speed.
- LVDS18, LVDS25/LVDS33, and LVDS25 specifications changed to 800 Mbps. For more information, see I/O Standards Specifications.
- A note was added indicting a zeroization cycle counts as a programming cycle. For more information, see Non-Volatile Characteristics.
- A note was added defining power down conditions for programming recovery conditions. For more information, see Power-Supply Ramp Times.

1.7 Revision 1.0

Revision 1.0 was the first publication of this document.

2 Overview

This datasheet describes PolarFire® FPGA device characteristics with industrial temperature range (–40 °C to 100 °C T_J) and extended commercial temperature range (0 °C to 100 °C T_J). The devices are provided with a standard speed grade (STD) and a –1 speed grade with higher performance. The FPGA core supply V_{DD} can operate at 1.0 V for lower-power or 1.05 V for higher performance. Similarly, the transceiver core supply V_{DDA} can also operate at 1.0 V or 1.05 V. Users select the core operating voltage while creating the Libero project.

3 References

The following documents are recommended references. For more information about PolarFire static and dynamic power data, see the PolarFire Power Estimator Spreadsheet.

- PO0137: PolarFire FPGA Product Overview
- ER0217: PolarFire FPGA Pre-Production Device Errata
- UG0722: PolarFire FPGA Packaging and Pin Descriptions User Guide
- UG0726: PolarFire FPGA Board Design User Guide
- UG0686: PolarFire FPGA User I/O User Guide
- UG0680: PolarFire FPGA Fabric User Guide
- UG0714: PolarFire FPGA Programming User Guide
- UG0684: PolarFire FPGA Clocking Resources User Guide
- UG0687: PolarFire FPGA 1G Ethernet Solutions User Guide
- UG0727: PolarFire FPGA 10G Ethernet Solutions User Guide
- UG0748: PolarFire FPGA Low Power User Guide
- UG0676: PolarFire FPGA DDR Memory Controller User Guide
- UG0743: PolarFire FPGA Debugging User Guide
- UG0725: PolarFire FPGA Device Power-Up and Resets User Guide
- UG0677: PolarFire FPGA Transceiver User Guide
- UG0685: PolarFire FPGA PCI Express User Guide
- UG0753: PolarFire FPGA Security User Guide
- UG0752: PolarFire FPGA Power Estimator User Guide

4 Device Offering

The following table lists the PolarFire FPGA device options using the MPF300T as an example. The MPF100T, MPF200T, and MPF500T device densities have identical offerings.

Table 1 • PolarFire FPGA Device Options

Device Options	Extended Commercial 0 °C–100 °C	Industrial –40 °C–100 °C	STD	–1	Transceivers T	Lower Static Power L	Data Security S
MPF300T	Yes	Yes	Yes	Yes	Yes		
MPF300TL	Yes	Yes	Yes		Yes	Yes	
MPF300TS		Yes	Yes	Yes	Yes		Yes
MPF300TLS		Yes	Yes		Yes	Yes	Yes

5 Silicon and Libero Tool Status

There are three status levels:

- **Advanced**—initial estimated information based on simulations
- **Preliminary**—information based on simulation and/or initial characterization
- **Production**—final production data

The following tables list the status of the PolarFire FPGA silicon and Libero Timing and Power tool.

Table 2 • PolarFire FPGA Silicon Status

Product	Silicon
MPF100T, TS, TL, TLS	Production
MPF200T, TS, TL, TLS	Production
MPF300T, TS, TL, TLS	Production
MPF500T, TS, TL, TLS	Production

Table 3 • PolarFire FPGA Tool Status

Product	Status	Libero Version							
		Timing				Power			
		Extended Commercial		Industrial		Extended Commercial		Industrial	
		STD	–1	STD	–1	STD	–1	STD	–1
MPF100T, TS, TL, TLS	Preliminary	12.0	12.0	12.0	12.0	12.0	12.0	12.0	12.0
	Production Vdd = 1.0 V	12.1	12.1	12.1	12.1	12.1	12.1	12.1	12.1
	Production Vdd = 1.05 V								
MPF200T, TS, TL, TLS	Preliminary	12.0	12.0	12.0	12.0	12.0	12.0	12.0	12.0
	Production Vdd = 1.0 V	12.1	12.1	12.1	12.1	12.1	12.1	12.1	12.1
	Production Vdd = 1.05 V								
MPF300T, TS, TL, TLS	Preliminary	12.0		12.0	12.0	12.0	12.0	12.0	12.0
	Production Vdd = 1.0 V	12.1	12.0	12.1	12.1	12.1	12.1	12.1	12.1
	Production Vdd = 1.05 V								
MPF500T, TS, TL, TLS	Preliminary	12.0	12.0	12.0	12.0	12.0	12.0	12.0	12.0
	Production Vdd = 1.0 V								
	Production Vdd = 1.05 V								

6 DC Characteristics

This section lists the DC characteristics of the PolarFire FPGA device.

6.1 Absolute Maximum Rating

The following table lists the absolute maximum ratings for PolarFire devices.

Table 4 • Absolute Maximum Rating

Parameter	Symbol	Min	Max	Unit
FPGA core power supply	V_{DD}	–0.5	1.13	V
Transceiver Tx and Rx lanes supply	V_{DDA}	–0.5	1.13	V
Programming and HSIO receiver supply	V_{DD18}	–0.5	2.0	V
FPGA core and FPGA PLL high-voltage supply	V_{DD25}	–0.5	2.7	V
Transceiver PLL high-voltage supply	V_{DDA25}	–0.5	2.7	V
Transceiver reference clock supply	$V_{DD_XCVR_CLK}$	–0.5	3.6	V
Global V_{REF} for transceiver reference clocks	$XCVR_{VREF}$	–0.5	3.6	V
HSIO DC I/O supply[2]	V_{DDIx}	–0.5	2.0	V
GPIO DC I/O supply[2]	V_{DDIx}	–0.5	3.6	V
Dedicated I/O DC supply for JTAG and SPI	V_{DDI3}	–0.5	3.6	V
GPIO auxiliary power supply for I/O bank x[2]	V_{DDAUXx}	–0.5	3.6	V
Maximum DC input voltage on GPIO	V_{IN}	–0.5	3.8	V
Maximum DC input voltage on HSIO	V_{IN}	–0.5	2.2	V
Transceiver receiver absolute input voltage	Transceiver V_{IN}	–0.5	1.26	V
Transceiver reference clock absolute input voltage	Transceiver REFCLK V_{IN}	–0.5	3.6	V
Storage temperature (ambient)[1]	T_{STG}	–65	150	°C
Junction temperature[1]	T_J	–55	135	°C
Maximum soldering temperature RoHS	$T_{SOLROHS}$		260	°C

1. See FPGA Programming Cycles vs Retention Characteristics (see page 66) for retention time vs temperature. The total time used in calculating the device retention includes the device operating temperature time and temperature during storage time.
2. The power supplies for a given I/O bank x are shown as VDDIx and VDDAUXx.

6.2 Recommended Operating Conditions

The following table lists the recommended operating conditions.

Table 5 • Recommended Operating Conditions

Parameter	Symbol	Min	Typ	Max	Unit	Condition
FPGA core supply at 1.0 V mode[1]	V_{DD}	0.97	1.00	1.03	V	
FPGA core supply at 1.05 V mode[1]	V_{DD}	1.02	1.05	1.08	V	

Parameter	Symbol	Min	Typ	Max	Unit	Condition
Transceiver TX and RX lanes supply (1.0 V mode)	V_{DDA}	0.97	1.00	1.03	V	When all lane rates are 10.3125 Gbps or less.[1]
Transceiver TX and RX lanes supply (1.05 V mode)	V_{DDA}	1.02	1.05	1.08	V	Must when any lane rate is greater than 10.3125 Gbps. Lane rates 10.3125 Gbps or less may also be powered in 1.05 V mode.[1]
Programming and HSIO receiver supply	V_{DD18}	1.71	1.80	1.89	V	
FPGA core and FPGA PLL high-voltage supply	V_{DD25}	2.425	2.50	2.575	V	
Transceiver PLL high-voltage supply	V_{DDA25}	2.425	2.50	2.575	V	
Transceiver reference clock supply	$V_{DD_XCVR_CLK}$	3.135	3.3	3.465	V	3.3 V nominal
		2.375	2.5	2.625	V	2.5 V nominal
Global V_{REF} for transceiver reference clocks[3]	$XCVR_{VREF}$	Ground		$V_{DD_XCVR_CLK}$	V	
HSIO DC I/O supply	V_{DDIx}	1.14	Various	1.89	V	Allowed nominal options: 1.2 V, 1.35 V, 1.5 V, and 1.8 V[4, 5]
GPIO DC I/O supply	V_{DDIx}	1.14	Various	3.465	V	Allowed nominal options: 1.2 V, 1.5 V, 1.8 V, 2.5 V, and 3.3 V[2, 4, 5]
Dedicated I/O DC supply for JTAG and SPI (GPIO Bank 3)	V_{DDI3}	1.71	Various	3.465	V	Allowed nominal options: 1.8 V, 2.5 V, and 3.3 V
GPIO auxiliary supply	V_{DDAUXx}	3.135	3.3	3.465	V	For I/O bank x with V_{DDIx} = 3.3 V nominal[2, 4, 5]
		2.375	2.5	2.625	V	For I/O bank x with V_{DDIx} = 2.5 V nominal or lower[2, 4, 5]
Extended commercial temperature range	T_J	0		100	°C	
Industrial temperature range	T_J	–40		100	°C	
Extended commercial programming temperature range	T_{PRG}	0		100	°C	
Industrial programming temperature range	T_{PRG}	–40		100	°C	

1. V_{DD} and V_{DDA} can independently operate at 1.0 V or 1.05 V nominal. These supplies are not dynamically adjustable.
2. For GPIO buffers where I/O bank is designated as bank number, if V_{DDIx} is 2.5 V nominal or 3.3 V nominal, V_{DDAUXx} must be connected to the V_{DDIx} supply for that bank. If V_{DDIx} for a given GPIO bank is <2.5 V nominal, V_{DDAUXx} per I/O bank must be powered at 2.5 V nominal.
3. $XCVR_{VREF}$ globally sets the reference voltage of the transceiver's single-ended reference clock input buffers. It is typically near $V_{DD_XCVR_CLK}$/2 V but is allowed in the specified range.
4. The power supplies for a given I/O bank x are shown as VDDIx and VDDAUXx.
5. At power up and power down the VDDIx and VDDAUXx supply sequencing can cause signal glitches. Refer to UG0686: PolarFire FPGA I/O User Guide and UG0726: PolarFire FPGA Board Design User Guide for detailed explanation and recommended steps.

6.2.1 DC Characteristics over Recommended Operating Conditions

The following table lists the DC characteristics over recommended operating conditions.

Table 6 • DC Characteristics over Recommended Operating Conditions

Parameter	Symbol	Min	Max	Unit	Condition
Input pin capacitance[1]	C_{IN} (dedicated GPIO)		5.6	pf	
	C_{IN} (GPIO)		5.6	pf	
	C_{IN} (HSIO)		2.8	pf	
Input or output leakage current per pin	I_L (GPIO)		10	µA	I/O disabled, high—Z
	I_L (HSIO)		10	µA	I/O disabled, high—Z
Pad pull-up when V_{IN} = 0	I_{PU}	137	220	µA	V_{DDIx} = 3.3 V
Pad pull-up when V_{IN} = 0		102	166	µA	V_{DDIx} = 2.5 V
Pad pull-up when V_{IN} = 0		68	115	µA	V_{DDIx} = 1.8 V
Pad pull-up when V_{IN} = 0		51	88	µA	V_{DDIx} = 1.5 V
Pad pull-up when V_{IN} = 0		29	73	µA	V_{DDIx} = 1.35 V
Pad pull-up when V_{IN} = 0		16	46	µA	V_{DDIx} = 1.2 V
Pad pull-down when V_{IN} = 3.3 V (GPIO only)	I_{PD}	65	187	µA	V_{DDIx} = 3.3 V
Pad pull-down when V_{IN} = 2.5 V (GPIO only)		63	160	µA	V_{DDIx} = 2.5 V
Pad pull-down when V_{IN} = 1.8 V		60	117	µA	V_{DDIx} = 1.8 V
Pad pull-down when V_{IN} = 1.5 V		57	95	µA	V_{DDIx} = 1.5 V
Pad pull-down when V_{IN} = 1.35 V		52	86	µA	V_{DDIx} = 1.35 V
Pad pull-down when V_{IN} = 1.2 V		47	79	µA	V_{DDIx} = 1.2 V

1. Represents the die input capacitance at the pad (not the package).

Table 7 • Minimum and Maximum Rise and Fall times

Parameter	Symbol	Min	Max	Unit	Maximum frequency	Condition
Input rise time[1,4]	T_{RISE}	200 ps[2,3]	10% bit period	ps	100 KHz	Not to exceed 1 µs
Input fall time[1,4]	T_{FALL}		12.5% bit period	ps	400 KHz	Not to exceed 300 ns
			20% bit period	ps	50 MHz	Not to exceed 50 ns
			4	ns	800 MHz	

1. Voltage ramp must be monotonic. For single-ended IO standards, input rise time is specified from 10%–90% of VDDIx and input fall time is specified from 90%–10% of VDDIx. For voltage referenced and differential IO configurations, ramp times must always comply with I/O standard requirements to ensure compliance.
2. Input slew rates must be controlled to never exceed PAD overshoot/undershoot requirements. Input pad overshoot and undershoot specifications are shown in section Maximum Allowed Overshoot and Undershoot (see page 10).
3. Rise and fall times in this table are for unterminated inputs. When inputs are terminated, minimum ramp time is not restricted. Recommended minimum ramp time is 25% of bit period, not to exceed a rate of 5 V/ns.
4. Ramp times must not exceed I/O standard requirements to ensure compliance.

6.2.2 Maximum Allowed Overshoot and Undershoot

The following table lists the maximum AC input voltage (V_{IN}) overshoot duration for HSIO.

During transitions, input signals may overshoot and undershoot the voltage listed as follows. Input currents must be limited to less than 100 mA per latch-up specifications.

The maximum overshoot duration is specified as a high-time percentage over the lifetime of the device. A DC signal is equivalent to 100% of the duty-cycle.

Table 8 • Maximum Overshoot During Transitions for HSIO

AC (V_{IN}) Overshoot Duration as % at T_J = 100 °C	Condition (V)
100	1.8
100	1.85
100	1.9
100	1.95
100	2
100	2.05
100	2.1
100	2.15
100	2.2
90	2.25
30	2.3
7.5	2.35
1.9	2.4

Note: Overshoot level is for VDDI at 1.8 V.

The following table lists the maximum AC input voltage (V_{IN}) undershoot duration for HSIO.

Table 9 • Maximum Undershoot During Transitions for HSIO

AC (V_{IN}) Undershoot Duration as % at T_J = 100 °C	Condition (V)
100	–0.05
100	–0.1
100	–0.15
100	–0.2
100	–0.25
100	–0.3
100	–0.35
100	–0.4
44	–0.45
14	–0.5

AC (V_{IN}) Undershoot Duration as % at T_J = 100 °C	Condition (V)
4.8	–0.55
1.6	–0.6

The following table lists the maximum AC input voltage (V_{IN}) overshoot duration for GPIO.

Table 10 • Maximum Overshoot During Transitions for GPIO

AC (V_{IN}) Overshoot Duration as % at T_J = 100 °C	Condition (V)
100	3.8
100	3.85
100	3.9
100	3.95
70	4
50	4.05
33	4.1
22	4.15
14	4.2
9.8	4.25
6.5	4.3
4.4	4.35
3	4.4
2	4.45
1.4	4.5
0.9	4.55
0.6	4.6

Note: Overshoot level is for V_{DDI} at 3.3 V.

The following table lists the maximum AC input voltage (V_{IN}) undershoot duration for GPIO.

Table 11 • Maximum Undershoot During Transitions for GPIO

AC (V_{IN}) Undershoot Duration as % at T_J = 100 °C	Condition (V)
100	–0.5
100	–0.55
100	–0.6
100	–0.65
100	–0.7
100	–0.75
100	–0.8
100	–0.85
100	–0.9

AC (V_{IN}) Undershoot Duration as % at T_J = 100 °C	Condition (V)
100	–0.95
100	–1
100	–1.05
100	–1.1
100	–1.15
100	–1.2
69	–1.25
45	–1.3

6.2.2.1 Power Supply Ramp Times

The following table lists the allowable power-up ramp times. Times shown correspond to the ramp of the supply from 0 V to the minimum recommended voltage as specified in the section Recommended Operating Conditions (see page 7). All supplies must rise and fall monotonically.

Table 12 • Power Supply Ramp Times

Parameter	Symbol	Min	Max	Unit
FPGA core supply	V_{DD}	0.2	50	ms
Transceiver core supply	V_{DDA}	0.2	50	ms
Must connect to 1.8 V supply	V_{DD18}	0.2	50	ms
Must connect to 2.5 V supply	V_{DD25}	0.2	50	ms
Must connect to 2.5 V supply	V_{DDA25}	0.2	50	ms
HSIO bank I/O power supplies	$V_{DDI[0,1,6,7]}$	0.2	50	ms
GPIO bank I/O power supplies	$V_{DDI[2,4,5]}$	0.2	50	ms
Bank 3 dedicated I/O buffers (GPIO)	V_{DDI3}	0.2	50	ms
GPIO bank auxiliary power supplies	$V_{DDAUX[2,4,5]}$	0.2	50	ms
Transceiver reference clock supply	$V_{DD_XCVR_CLK}$	0.2	50	ms
Global V_{REF} for transceiver reference clocks	$XCVR_{VREF}$	0.2	50	ms

Note: For proper operation of programming recovery mode, if a VDD supply brownout occurs during programming, a minimum supply ramp down time for only the VDD supply is recommended to be 10 ms or longer by using a programmable regulator or on-board capacitors.

6.2.2.2 Hot Socketing

The following table lists the hot socketing DC characteristics over recommended operating conditions.

Table 13 • Hot Socketing DC Characteristics over Recommended Operating Conditions

Parameter	Symbol	Min	Typ	Max	Unit	Condition
Current per transceiver Rx input pin (P or N single-ended)[1, 2]	I_{XCVRRX_HS}			±4	mA	V_{DDA} = 0 V
Current per transceiver Tx output pin (P or N single-ended)[3]	I_{XCVRTX_HS}			±10	mA	V_{DDA} = 0 V
Current per transceiver reference clock input pin (P or N single-ended)[4]	$I_{XCVRREF_HS}$			±1	mA	$V_{DD_XCVR_CLK}$ = 0 V
Current per GPIO pin (P or N single-ended)[5]	I_{GPIO_HS}			±1	mA	V_{DDIx} = 0 V
Current per HSIO pin (P or N single-ended)						Hot socketing is not supported in HSIO.

1. Assumes device is powered-down, all supplies are grounded, AC-coupled interface, and input pin pairs are driven by a CML driver at the maximum amplitude (1 V pk–pk) that is toggling at any rate with PRBS7 data.
2. Each P and N transceiver input has less than the specified maximum input current.
3. Each P and N transceiver output is connected to a 40 Ω resistor (50 Ω CML termination—20% tolerance) to the maximum allowed output voltage (V_{DDAmax} + 0.3 V = 1.4 V) through an AC-coupling capacitor with all PolarFire device supplies grounded. This shows the current for a worst-case DC coupled interface. As an AC-coupled interface, the output signal will settle at ground and no hot socket current will be seen.
4. $V_{DD_XCVR_CLK}$ is powered down and the device is driven to –0.3 V < V_{IN} < $V_{DD_XCVR_CLK}$.
5. V_{DDIx} is powered down and the device is driven to –0.3 V < V_{IN} < GPIO V_{DDImax}.

Note: The following dedicated pins do not support hot socketing: TMS, TDI, TRSTB, and DEVRST_N. Weak pull-up (as specified in GPIO) is always enabled.

6.3 Input and Output

The following section describes DC I/O levels, differential and complementary differential DC I/O levels, HSIO and GPIO on-die termination specifications, and LVDS specifications.

6.3.1 DC Input and Output Levels

The following tables list the DC I/O levels.

Table 14 • DC Input Levels

I/O Standard	V_{DDI} Min (V)	V_{DDI} Typ (V)	V_{DDI} Max (V)	V_{IL} Min (V)	V_{IL} Max (V)	V_{IH} Min (V)	V_{IH}[1] Max (V)
PCI	3.15	3.3	3.45	–0.3	0.3 × V_{DDI}	0.5 × V_{DDI}	3.45
LVTTL	3.15	3.3	3.45	–0.3	0.8	2	3.45
LVCMOS33	3.15	3.3	3.45	–0.3	0.8	2	3.45
LVCMOS25	2.375	2.5	2.625	–0.3	0.7	1.7	2.625
LVCMOS18	1.71	1.8	1.89	–0.3	0.35 × V_{DDI}	0.65 × V_{DDI}	1.89
LVCMOS15	1.425	1.5	1.575	–0.3	0.35 × V_{DDI}	0.65 × V_{DDI}	1.575
LVCMOS12	1.14	1.2	1.26	–0.3	0.35 × V_{DDI}	0.65 × V_{DDI}	1.26
SSTL25I[2]	2.375	2.5	2.625	–0.3	V_{REF} – 0.15	V_{REF} + 0.15	2.625
SSTL25II[2]	2.375	2.5	2.625	–0.3	V_{REF} – 0.15	V_{REF} + 0.15	2.625
SSTL18I[2]	1.71	1.8	1.89	–0.3	V_{REF} – 0.125	V_{REF} + 0.125	1.89
SSTL18II[2]	1.71	1.8	1.89	–0.3	V_{REF} – 0.125	V_{REF} + 0.125	1.89
SSTL15I	1.425	1.5	1.575	–0.3	V_{REF} – 0.1	V_{REF} + 0.1	1.575
SSTL15II	1.425	1.5	1.575	–0.3	V_{REF} – 0.1	V_{REF} + 0.1	1.575
SSTL135I	1.283	1.35	1.418	–0.3	V_{REF} – 0.09	V_{REF} + 0.09	1.418
SSTL135II	1.283	1.35	1.418	–0.3	V_{REF} – 0.09	V_{REF} + 0.09	1.418
HSTL15I	1.425	1.5	1.575	–0.3	V_{REF} – 0.1	V_{REF} + 0.1	1.575
HSTL15II	1.425	1.5	1.575	–0.3	V_{REF} – 0.1	V_{REF} + 0.1	1.575
HSTL135I	1.283	1.35	1.418	–0.3	V_{REF} – 0.09	V_{REF} + 0.09	1.418
HSTL135II	1.283	1.35	1.418	–0.3	V_{REF} – 0.09	V_{REF} + 0.09	1.418
HSTL12I	1.14	1.2	1.26	–0.3	V_{REF} – 0.1	V_{REF} + 0.1	1.26
HSTL12II	1.14	1.2	1.26	–0.3	V_{REF} – 0.1	V_{REF} + 0.1	1.26
HSUL18I	1.71	1.8	1.89	–0.3	0.3 × V_{DDI}	0.7 × V_{DDI}	1.89
HSUL18II	1.71	1.8	1.89	–0.3	0.3 × V_{DDI}	0.7 × V_{DDI}	1.89
HSUL12I	1.14	1.2	1.26	–0.3	V_{REF} – 0.1	V_{REF} + 0.1	1.26
POD12I	1.14	1.2	1.26	–0.3	V_{REF} – 0.08	V_{REF} + 0.08	1.26
POD12II	1.14	1.2	1.26	–0.3	V_{REF} – 0.08	V_{REF} + 0.08	1.26

1. GPIO V_{IH} max is 3.45 V with PCI clamp diode turned off regardless of mode, that is, over-voltage tolerant.
2. For external stub-series resistance. This resistance is on-die for GPIO.

Note: 3.3 V and 2.5 V are only supported in GPIO banks.

Table 15 • DC Output Levels

I/O Standard	V_{DDI} Min (V)	V_{DDI} Typ (V)	V_{DDI} Max (V)	V_{OL} Max (V)	V_{OH} Min (V)	I_{OL}[2,6] mA	I_{OH}[2,6] mA
PCI[1]	3.15	3.3	3.45	0.1 × V_{DDI}	0.9 × V_{DDI}	1.5	0.5
LVTTL	3.15	3.3	3.45	0.4	2.4	Refer to note 2	
LVCMOS33	3.15	3.3	3.45	0.4	V_{DDI} – 0.4		
LVCMOS25	2.375	2.5	2.625	0.4	V_{DDI} – 0.4		
LVCMOS18	1.71	1.8	1.89	0.45	V_{DDI} – 0.45		
LVCMOS15	1.425	1.5	1.575	0.25 × V_{DDI}	0.75 × V_{DDI}		
LVCMOS12	1.14	1.2	1.26	0.25 × V_{DDI}	0.75 × V_{DDI}		
SSTL25I[3]	2.375	2.5	2.625	V_{TT} – 0.608	V_{TT} + 0.608	8.1	8.1
SSTL25II[3]	2.375	2.5	2.625	V_{TT} – 0.810	V_{TT} + 0.810	16.2	16.2
SSTL18I[3]	1.71	1.8	1.89	V_{TT} – 0.603	V_{TT} + 0.603	6.7	6.7
SSTL18II[3]	1.71	1.8	1.89	V_{TT} – 0.603	V_{TT} + 0.603	13.4	13.4
SSTL15I[4]	1.425	1.5	1.575	0.2 × V_{DDI}	0.8 × V_{DDI}	V_{OL}/40	(V_{DDI} – V_{OH})/40
SSTL15II[4]	1.425	1.5	1.575	0.2 × V_{DDI}	0.8 × V_{DDI}	V_{OL}/34	(V_{DDI} – V_{OH})/34
SSTL135I[4]	1.283	1.35	1.418	0.2 × V_{DDI}	0.8 × V_{DDI}	V_{OL}/40	(V_{DDI} – V_{OH})/40
SSTL135II[4]	1.283	1.35	1.418	0.2 × V_{DDI}	0.8 × V_{DDI}	V_{OL}/34	(V_{DDI} – V_{OH})/34
HSTL15I	1.425	1.5	1.575	0.4	V_{DDI} – 0.4	8	8
HSTL15II	1.425	1.5	1.575	0.4	V_{DDI} – 0.4	16	16
HSTL135I[4]	1.283	1.35	1.418	0.2 × V_{DDI}	0.8 × V_{DDI}	V_{OL}/50	(V_{DDI} – V_{OH})/50
HSTL135II[4]	1.283	1.35	1.418	0.2 × V_{DDI}	0.8 × V_{DDI}	V_{OL}/25	(V_{DDI} – V_{OH})/25
HSTL12I[4]	1.14	1.2	1.26	0.1 × V_{DDI}	0.9 × V_{DDI}	V_{OL}/50	(V_{DDI} – V_{OH})/50
HSTL12II[4]	1.14	1.2	1.26	0.1 × V_{DDI}	0.9 × V_{DDI}	V_{OL}/25	(V_{DDI} – V_{OH})/25
HSUL18I[4]	1.71	1.8	1.89	0.1 × V_{DDI}	0.9 × V_{DDI}	V_{OL}/55	(V_{DDI} – V_{OH})/55
HSUL18II[4]	1.71	1.8	1.89	0.1 × V_{DDI}	0.9 × V_{DDI}	V_{OL}/25	(V_{DDI} – V_{OH})/25
HSUL12I[4]	1.14	1.2	1.26	0.1 × V_{DDI}	0.9 × V_{DDI}	V_{OL}/40	(V_{DDI} – V_{OH})/40
POD12I[4,5]	1.14	1.2	1.26	0.5 × V_{DDI}		V_{OL}/48	(V_{DDI} – V_{OH})/48
POD12II[4,5]	1.14	1.2	1.26	0.5 × V_{DDI}		V_{OL}/34	(V_{DDI} – V_{OH})/34

1. Drive strengths per PCI specification V/I curves.
2. Refer to UG0686: PolarFire FPGA User I/O User Guide for details on supported drive strengths.
3. For external stub-series resistance. This resistance is on-die for GPIO.
4. I_{OL}/I_{OH} units for impedance standards in amps (not mA).
5. VOH_MAX based on external pull-up termination (pseudo-open drain).
6. The total DC sink/source current of all IOs within a lane is limited as follows:
   a. HSIO lane: 120 mA per 12 IO buffers.
   b. GPIO lane: 160 mA per 12 IO buffers.

Note: 3.3 V and 2.5 V are only supported in GPIO banks.

6.3.2 Differential DC Input and Output Levels

The follow tables list the differential DC I/O levels.

Table 16 • Differential DC Input Levels

I/O Standard	Bank Type	VICM_RANGE Libero Setting	V_{ICM}[1,3] Min (V)	V_{ICM}[1,3] Typ (V)	V_{ICM}[1,3] Max (V)	V_{ID}[2] Min (V)	V_{ID} Typ (V)	V_{ID} Max (V)
LVDS33	GPIO	Mid (default)	0.6	1.25	2.35	0.1	0.35	0.6
		Low	0.05	0.4	0.8	0.1	0.35	0.6
LVDS25	GPIO	Mid (default)	0.6	1.25	2.35	0.1	0.35	0.6
		Low	0.05	0.4	0.8	0.1	0.35	0.6
LVDS18[4]	GPIO	Mid (default)	0.6	1.25	1.65	0.1	0.35	0.6
		Low	0.05	0.4	0.8	0.1	0.35	0.6
LVDS18	HSIO	Mid (default)	0.6	1.25	1.65	0.1	0.35	0.6
		Low	0.05	0.4	0.8	0.1	0.35	0.6
LCMDS33	GPIO	Mid (default)	0.6	1.25	2.35	0.1	0.35	0.6
		Low	0.05	0.4	0.8	0.1	0.35	0.6
LCMDS18	HSIO	Mid (default)	0.6	1.25	1.65	0.1	0.35	0.6
		Low	0.05	0.4	0.8	0.1	0.35	0.6
LCMDS25	GPIO	Mid (default)	0.6	1.25	2.35	0.1	0.35	0.6
		Low	0.05	0.4	0.8	0.1	0.35	0.6
RSDS33	GPIO	Mid (default)	0.6	1.25	2.35	0.1	0.2	0.6
		Low	0.05	0.4	0.8	0.1	0.2	0.6
RSDS25	GPIO	Mid (default)	0.6	1.25	2.35	0.1	0.2	0.6
		Low	0.05	0.4	0.8	0.1	0.2	0.6
RSDS18[5]	HSIO	Mid (default)	0.6	1.25	1.65	0.1	0.2	0.6
		Low	0.05	0.4	0.8	0.1	0.2	0.6
MINILVDS33	GPIO	Mid (default)	0.6	1.25	2.35	0.1	0.3	0.6
		Low	0.05	0.4	0.8	0.1	0.3	0.6
MINILVDS25	GPIO	Mid (default)	0.6	1.25	2.35	0.1	0.3	0.6
		Low	0.05	0.4	0.8	0.1	0.3	0.6
MINILVDS18[5]	HSIO	Mid (default)	0.6	1.25	1.65	0.1	0.3	0.6
		Low	0.05	0.4	0.8	0.1	0.3	0.6
SUBLVDS33	GPIO	Mid (default)	0.6	0.9	2.35	0.1	0.15	0.3
		Low	0.05	0.4	0.8	0.1	0.15	0.3
SUBLVDS25	GPIO	Mid (default)	0.6	0.9	2.35	0.1	0.15	0.3
		Low	0.05	0.4	0.8	0.1	0.15	0.3
SUBLVDS18[5]	HSIO	Mid (default)	0.6	0.9	1.65	0.1	0.15	0.3
		Low	0.05	0.4	0.8	0.1	0.15	0.3
PPDS33	GPIO	Mid (default)	0.6	0.8	2.35	0.1	0.2	0.6
		Low	0.05	0.4	0.8	0.1	0.2	0.6

I/O Standard	Bank Type	VICM_RANGE Libero Setting	V_{ICM}[1,3] Min (V)	V_{ICM}[1,3] Typ (V)	V_{ICM}[1,3] Max (V)	V_{ID}[2] Min (V)	V_{ID} Typ (V)	V_{ID} Max (V)
PPDS25	GPIO	Mid (default)	0.6	0.8	2.35	0.1	0.2	0.6
		Low	0.05	0.4	0.8	0.1	0.2	0.6
PPDS18[5]	HSIO	Mid (default)	0.6	0.8	1.65	0.1	0.2	0.6
		Low	0.05	0.4	0.8	0.1	0.2	0.6
SLVS33[6]	GPIO	Mid (default)	0.6	1.25	2.35	0.1	0.2	0.3
		Low	0.05	0.2	0.8	0.1	0.2	0.3
SLVS25[6]	GPIO	Mid (default)	0.6	1.25	2.35	0.1	0.2	0.3
		Low	0.05	0.2	0.8	0.1	0.2	0.3
SLVS18[5]	HSIO	Mid (default)	0.6	1.00	1.65	0.1	0.2	0.3
		Low	0.05	0.4	0.8	0.1	0.2	0.3
HCSL33[6]	GPIO	Mid (default)	0.6	1.25	2.35	0.1	0.55	1.1
		Low	0.05	0.35	0.8	0.1	0.55	1.1
HCSL25[6]	GPIO	Mid (default)	0.6	1.25	2.35	0.1	0.55	1.1
		Low	0.05	0.35	0.8	0.1	0.55	1.1
HCSL18[5]	HSIO	Mid (default)	0.6	1.0	1.65	0.1	0.55	1.1
		Low	0.05	0.4	0.8	0.1	0.55	1.1
BUSLVDSE25	GPIO	Mid (default)	0.6	1.25	2.35	0.05	0.1	V_{DDIn}
		Low	0.05	0.4	0.8	0.05	0.1	V_{DDIn}
MLVDSE25	GPIO	Mid (default)	0.6	1.25	2.35	0.05	0.35	2.4
		Low	0.05	0.4	0.8	0.05	0.35	2.4
LVPECL33	GPIO	Mid (default)	0.6	1.65	2.35	0.05	0.8	2.4
		Low	0.05	0.4	0.8	0.05	0.8	2.4
LVPECLE33	GPIO	Mid (default)	0.6	1.65	2.35	0.05	0.8	2.4
		Low	0.05	0.4	0.8	0.05	0.8	2.4
MIPI25	GPIO	Mid (default)	0.6	1.25	2.35	0.05	0.2	0.3
		Low	0.05	0.2	0.8	0.05	0.2	0.3

1. V_{ICM} is the input common mode.
2. V_{ID} is the input differential voltage.
3. V_{ICM} rules are as follows:
   a. V_{ICM} must be less than V_{DDI} – 0.4 V;
   b. $V_{ICM} + V_{ID}/2$ must be $<V_{DDI} + 0.4$ V;
   c. $V_{ICM} – V_{ID}/2$ must be >VSS – 0.3 V;
   d. Any differential input with V_{ICM} ≤0.6 V requires the low common mode setting in Libero (VICM_RANGE=LOW).
4. VDDI = 1.8 V, VDDAUX = 2.5 V.
5. HSIO receiver only.
6. GPIO receiver only.

Table 17 • Differential DC Output Levels

I/O Standard	Bank Type	V_{OCM}[1] Min (V)	V_{OCM} Typ (V)	V_{OCM} Max (V)	V_{OD}[2] Min (V)	V_{OD}[2] Typ (V)	V_{OD}[2] Max (V)
LVDS33	GPIO	1.125	1.2	1.375	0.25	0.35	0.45
LVDS25	GPIO	1.125	1.2	1.375	0.25	0.35	0.45
LCMDS33	GPIO	0.45	0.6	0.7	0.25	0.35	0.45
LCMDS25	GPIO	0.45	0.6	0.7	0.25	0.35	0.45
RSDS33	GPIO	1.125	1.2	1.375	0.17	0.2	0.23
RSDS25	GPIO	1.125	1.2	1.375	0.17	0.2	0.23
MINILVDS33	GPIO	1.125	1.2	2.375	0.3	0.4	0.6
MINILVDS25	GPIO	1.125	1.2	2.375	0.3	0.4	0.6
SUBLVDS33	GPIO	0.8	0.9	1.0	0.1	0.15	0.3
SUBLVDS25	GPIO	0.8	0.9	1.0	0.1	0.15	0.3
PPDS33	GPIO	0.05	0.8	1.4	0.17	0.2	0.23
PPDS25	GPIO	0.05	0.8	1.4	0.17	0.2	0.23
SLVSE15[3]	GPIO, HSIO	0.1	0.2	0.3	0.12	0.135	0.15
BUSLVDSE25[3]	GPIO	1.15	1.25	1.31	0.24	0.262	0.272
MLVDSE25[3]	GPIO	1.15	1.25	1.31	0.396	0.442	0.453
LVPECLE33[3]	GPIO	1.51	1.65	1.74	0.664	0.722	0.755
MIPIE25 [3]	GPIO	0.15	0.25	0.35	0.1	0.22	0.3

1. V_{OCM} is the output common mode voltage.
2. V_{OD} is the output differential voltage.
3. Emulated output only, using external resistors.

6.3.3 Complementary Differential DC Input and Output Levels

The following tables list the complementary differential DC I/O levels.

Table 18 • Complementary Differential DC Input Levels

I/O Standard	V_{DDI} Min (V)	V_{DDI} Typ (V)	V_{DDI} Max (V)	V_{ICM}[1,3] Min (V)	V_{ICM}[1,3] Typ (V)	V_{ICM}[1,3] Max (V)	V_{ID}[2] Min (V)	V_{ID}[2] Max (V)
SSTL25I	2.375	2.5	2.625	1.164	1.250	1.339	0.1	V_{DDAUX} (GPIO)
SSTL25II	2.375	2.5	2.625	1.164	1.250	1.339	0.1	V_{DDAUX} (GPIO)
SSTL18I	1.71	1.8	1.89	0.838	0.900	0.964	0.1	V_{DDAUX} (GPIO) V_{DDI} (HSIO)
SSTL18II	1.71	1.8	1.89	0.838	0.900	0.964	0.1	V_{DDAUX} (GPIO) V_{DDI} (HSIO)
SSTL15I	1.425	1.5	1.575	0.698	0.750	0.803	0.1	V_{DDAUX} (GPIO) V_{DDI} (HSIO)
SSTL15II	1.425	1.5	1.575	0.698	0.750	0.803	0.1	V_{DDAUX} (GPIO) V_{DDI} (HSIO)
SSTL135I	1.283	1.35	1.418	0.629	0.675	0.723	0.1	V_{DDI} (HSIO)
SSTL135II	1.283	1.35	1.418	0.629	0.675	0.723	0.1	V_{DDI} (HSIO)
HSTL15I	1.425	1.5	1.575	0.698	0.750	0.803	0.1	V_{DDAUX} (GPIO) V_{DDI} (HSIO)
HSTL15II	1.425	1.5	1.575	0.698	0.750	0.803	0.1	V_{DDAUX} (GPIO) V_{DDI} (HSIO)
HSTL135I	1.283	1.35	1.418	0.629	0.675	0.723	0.1	V_{DDI} (HSIO)
HSTL135II	1.283	1.35	1.418	0.629	0.675	0.723	0.1	V_{DDI} (HSIO)
HSTL12I	1.14	1.2	1.26	0.559	0.600	0.643	0.1	V_{DDI} (HSIO)
HSTL12II	1.14	1.2	1.26	0.559	0.600	0.643	0.1	V_{DDI} (HSIO)
HSUL18I	1.71	1.8	1.89	0.838	0.900	0.964	0.1	V_{DDI} (HSIO)
HSUL18II	1.71	1.8	1.89	0.838	0.900	0.964	0.1	V_{DDI} (HSIO)
HSUL12I	1.14	1.2	1.26	0.559	0.600	0.643	0.1	V_{DDI} (HSIO)
POD12I	1.14	1.2	1.26	0.787	0.840	0.895	0.1	V_{DDI} (HSIO)
POD12II	1.14	1.2	1.26	0.787	0.840	0.895	0.1	V_{DDI} (HSIO)

1. V_{ICM} is the input common mode voltage.
2. V_{ID} is the input differential voltage.
3. V_{ICM} rules are as follows:
   a. V_{ICM} must be less than V_{DDI} – 0.4 V;
   b. $V_{ICM} + V_{ID}/2$ must be $<V_{DDI} + 0.4$ V;
   c. $V_{ICM} – V_{ID}/2$ must be >VSS – 0.3 V.

Table 19 • Complementary Differential DC Output Levels

I/O Standard	V_{DDI} Min (V)	V_{DDI} Typ (V)	V_{DDI} Max (V)	V_{OL} Min (V)	V_{OL} Max (V)	V_{OH}[1,3] Min (V)	I_{OL}[2] Min (mA)	I_{OH}[2] Min (mA)
SSTL25I	2.375	2.5	2.625		V_{TT} – 0.608	V_{TT} + 0.608	8.1	8.1
SSTL25II	2.375	2.5	2.625		V_{TT} – 0.810	V_{TT} + 0.810	16.2	16.2
SSTL18I	1.71	1.8	1.89		V_{TT} – 0.603	V_{TT} + 0.603	6.7	6.7
SSTL18II	1.71	1.8	1.89		V_{TT} – 0.603	V_{TT} + 0.603	13.4	13.4
SSTL15I[4]	1.425	1.5	1.575		0.2 × V_{DDI}	0.8 × V_{DDI}	V_{OL}/40	(V_{DDI} – V_{OH})/40
SSTL15II[4]	1.425	1.5	1.575		0.2 × V_{DDI}	0.8 × V_{DDI}	V_{OL}/34	(V_{DDI} – V_{OH})/34
SSTL135I[4]	1.283	1.35	1.418		0.2 × V_{DDI}	0.8 × V_{DDI}	V_{OL}/40	(V_{DDI} – V_{OH})/40
SSTL135II[4]	1.283	1.35	1.418		0.2 × V_{DDI}	0.8 × V_{DDI}	V_{OL}/34	(V_{DDI} – V_{OH})/34
HSTL15I	1.425	1.5	1.575		0.4	V_{DDI} – 0.4	8	8
HSTL15II	1.425	1.5	1.575		0.4	V_{DDI} – 0.4	16	16
HSTL135I[4]	1.283	1.35	1.418		0.2 × V_{DDI}	0.8 × V_{DDI}	V_{OL}/50	(V_{DDI} – V_{OH})/50
HSTL135II[4]	1.283	1.35	1.418		0.2 × V_{DDI}	0.8 × V_{DDI}	V_{OL}/25	(V_{DDI} – V_{OH})/25
HSTL12I[4]	1.14	1.2	1.26		0.1 × V_{DDI}	0.9 × V_{DDI}	V_{OL}/50	(V_{DDI} – V_{OH})/50
HSTL12II[4]	1.14	1.2	1.26		0.1 × V_{DDI}	0.9 × V_{DDI}	V_{OL}/25	(V_{DDI} – V_{OH})/25
HSUL18I[4]	1.71	1.8	1.89		0.1 × V_{DDI}	0.9 × V_{DDI}	V_{OL}/55	(V_{DDI} – V_{OH})/55
HSUL18II[4]	1.71	1.8	1.89		0.1 × V_{DDI}	0.9 × V_{DDI}	V_{OL}/25	(V_{DDI} – V_{OH})/25
HSUL12I[4]	1.14	1.2	1.26		0.1 × V_{DDI}	0.9 × V_{DDI}	V_{OL}/40	(V_{DDI} – V_{OH})/40
POD12I[3,4]	1.14	1.2	1.26		0.5 × V_{DDI}		V_{OL}/48	(V_{DDI} – V_{OH})/48
POD12II[3,4]	1.14	1.2	1.26		0.5 × V_{DDI}		V_{OL}/34	(V_{DDI} – V_{OH})/34

1. V_{OH} is the single-ended high-output voltage.
2. The total DC sink/source current of all I/Os within a lane is limited as follows:
   a. HSIO lane: 120 mA per 12 I/O buffers.
   b. GPIO lane: 160 mA per 12 I/O buffers.
3. V_{OH_MAX} is based on external pull-up termination (pseudo-open drain).
4. I_{OL}/I_{OH} units for impedance standards are in amps (not mA).

6.3.4 HSIO On-Die Termination

The following tables list the on-die termination calibration accuracy specifications for the HSIO bank.

Table 20 • Single-Ended (Internal Parallel) Thevenin Termination

Min (%)	Typ	Max (%)	Unit	Condition
–40	50	20	Ω	V_{DDI} = 1.8 V/1.5 V/1.35 V/1.2 V
–40	75	20	Ω	V_{DDI} = 1.8 V
–40	150	20	Ω	V_{DDI} = 1.8 V
–20	20	20	Ω	V_{DDI} = 1.5 V/1.35 V
–20	30	20	Ω	V_{DDI} = 1.5 V/1.35 V
–20	40	20	Ω	V_{DDI} = 1.5 V/1.35 V
–20	60	20	Ω	V_{DDI} = 1.5 V/1.35 V
–20	120	20	Ω	V_{DDI} = 1.5 V/1.35 V
–20	60	20	Ω	V_{DDI} = 1.2 V
–20	120	20	Ω	V_{DDI} = 1.2 V

Note: Thevenin impedance is calculated based on independent P and N as measured at 50% of V_{DDI}. For 50 Ω/75 Ω/150 Ω cases, the nearest supported values of 40 Ω/60 Ω/120 Ω are used.

Table 21 • Single-Ended (Internal Parallel) Termination to VDDI

Min (%)	Typ	Max (%)	Unit	Condition
–20	34	20	Ω	V_{DDI} = 1.2 V
–20	40	20	Ω	V_{DDI} = 1.2 V
–20	48	20	Ω	V_{DDI} = 1.2 V
–20	60	20	Ω	V_{DDI} = 1.2 V
–20	80	20	Ω	V_{DDI} = 1.2 V
–20	120	20	Ω	V_{DDI} = 1.2 V
–20	240	20	Ω	V_{DDI} = 1.2 V

Note: Measured at 80% of V_{DDI}.

Table 22 • Single-Ended (Internal Parallel) Termination to VSS

Min (%)	Typ	Max (%)	Unit	Condition
–20	120	20	Ω	V_{DDI} = 1.8 V/1.5 V
–20	240	20	Ω	V_{DDI} = 1.8 V/1.5 V
–20	120	20	Ω	V_{DDI} = 1.2 V
–20	240	20	Ω	V_{DDI} = 1.2 V

Note: Measured at 50% of V_{DDI}.

6.3.5 GPIO On-Die Termination

The following table lists the on-die termination calibration accuracy specifications for the GPIO bank.

Table 23 • On-Die Termination Calibration Accuracy Specifications for GPIO Bank

Parameter	Description	Min (%)	Typ	Max (%)	Unit	Condition
Differential termination[1]	Internal differential termination	–20	100	20	Ω	V_{ICM} < 0.8 V [6]
		–20	100	40	Ω	0.6 V < V_{ICM} < 1.65 V [6]
		–20	100	80	Ω	1.4 V < V_{ICM} [6]
Single-ended thevenin termination[2, 3]	Internal parallel thevenin termination	–40	50	20	Ω	V_{DDI} = 1.8 V/1.5 V
		–40	75	20	Ω	V_{DDI} = 1.8 V
		–40	150	20	Ω	V_{DDI} = 1.8 V
		–20	20	20	Ω	V_{DDI} = 1.5 V
		–20	30	20	Ω	V_{DDI} = 1.5 V
		–20	40	20	Ω	V_{DDI} = 1.5 V
		–20	60	20	Ω	V_{DDI} = 1.5 V
		–20	120	20	Ω	V_{DDI} = 1.5 V
Single-ended termination to V_{SS}[4, 5]	Internal parallel termination to V_{SS}	–20	120	20	Ω	V_{DDI} = 2.5 V/1.8 V/1.5 V/1.2 V
		–20	240	20	Ω	V_{DDI} = 2.5 V/1.8 V/1.5 V/1.2 V

1. Measured across P to N with 400 mV bias.
2. Thevenin impedance is calculated based on independent P and N as measured at 50% of V_{DDI}.
3. For 50 Ω/75 Ω/150 Ω cases, the nearest supported values of 40 Ω/60 Ω/120 Ω are used.
4. Measured at 50% of V_{DDI}.
5. Supported terminations vary with the I/O type regardless of V_{DDI} nominal voltage. Refer to Libero for available combinations.
6. When V_{ICM} complies with more than one range, use the maximum percentage tolerance of the two ranges.

7 AC Switching Characteristics

This section contains the AC switching characteristics of the PolarFire FPGA device.

7.1 I/O Standards Specifications

This section describes I/O delay measurement methodology, buffer speed, switching characteristics, digital latency, gearing training calibration, and maximum physical interface (PHY) rate for memory interface IP.

7.1.1 Input Delay Measurement Methodology Maximum PHY Rate for Memory Interface IP

The following table provides information about the methodology for input delay measurement.

Table 24 • Input Delay Measurement Methodology

Standard	Description	V_L[1]	V_H[1]	V_{ID}[2]	V_{ICM}[2]	V_{MEAS}[3, 4]	V_{REF}[1, 5]	Unit
PCI	PCIE 3.3 V	0	VDDI			VDDI/2		V
LVTTL	LVTTL 3.3 V	0	VDDI			VDDI/2		V
LVCMOS33	LVCMOS 3.3 V	0	VDDI			VDDI/2		V
LVCMOS25	LVCMOS 2.5 V	0	VDDI			VDDI/2		V
LVCMOS18	LVCMOS 1.8 V	0	VDDI			VDDI/2		V
LVCMOS15	LVCMOS 1.5 V	0	VDDI			VDDI/2		V
LVCMOS12	LVCMOS 1.2 V	0	VDDI			VDDI/2		V
SSTL25I	SSTL 2.5 V Class I	V_{REF} – 0.5	V_{REF} + 0.5			V_{REF}	1.25	V
SSTL25II	SSTL 2.5 V Class II	V_{REF} – 0.5	V_{REF} + 0.5			V_{REF}	1.25	V
SSTL18I	SSTL 1.8 V Class I	V_{REF} – 0.5	V_{REF} + 0.5			V_{REF}	0.90	V
SSTL18II	SSTL 1.8 V Class II	V_{REF} – 0.5	V_{REF} + 0.5			V_{REF}	0.90	V
SSTL15I	SSTL 1.5 V Class I	V_{REF} – .175	V_{REF} + .175			V_{REF}	0.75	V
SSTL15II	SSTL 1.5 V Class II	V_{REF} – .175	V_{REF} + .175			V_{REF}	0.75	V
SSTL135I	SSTL 1.35 V Class I	V_{REF} – .16	V_{REF} + .16			V_{REF}	0.675	V
SSTL135II	SSTL 1.35 V Class II	V_{REF} – .16	V_{REF} + .16			V_{REF}	0.675	V
HSTL15I	HSTL 1.5 V Class I	V_{REF} – .5	V_{REF} + .5			V_{REF}	0.75	V
HSTL15II	HSTL 1.5 V Class II	V_{REF} – .5	V_{REF} + .5			V_{REF}	0.75	V
HSTL135I	HSTL 1.35 V Class I	V_{REF} – .45	V_{REF} + .45			V_{REF}	0.675	V

Standard	Description	V_L[1]	V_H[1]	V_{ID}[2]	V_{ICM}[2]	V_{MEAS}[3, 4]	V_{REF}[1, 5]	Unit
HSTL135II	HSTL 1.35 V Class II	V_{REF} – .45	V_{REF} + .45			V_{REF}	0.675	V
HSTL12I	HSTL 1.2 V Class I	V_{REF} – .4	V_{REF} + .4			V_{REF}	0.60	V
HSTL12II	HSTL 1.2 V Class II	V_{REF} – .4	V_{REF} + .4			V_{REF}	0.60	V
HSUL18I	HSUL 1.8 V Class I	V_{REF} – .54	V_{REF} + .54			V_{REF}	0.90	V
HSUL18II	HSUL 1.8 V Class II	V_{REF} – .54	V_{REF} + 0.54			V_{REF}	0.90	V
HSUL12I	HSUL 1.2 V	V_{REF} – .22	V_{REF} + .22			V_{REF}	0.60	V
POD12I	Pseudo open drain (POD) logic 1.2 V Class I	V_{REF} – .15	V_{REF} + .15			V_{REF}	0.84	V
POD12II	POD 1.2 V Class II	V_{REF} – .15	V_{REF} + .15			V_{REF}	0.84	V
LVDS33	Low-voltage differential signaling (LVDS) 3.3 V	V_{ICM} – .125	V_{ICM} + .125	0.250	1.250	0		V
LVDS25	LVDS 2.5 V	V_{ICM} – .125	V_{ICM} + .125	0.250	1.250	0		V
LVDS18	LVDS 1.8 V	V_{ICM} – .125	V_{ICM} + .125	0.250	1.250	0		V
LCMDS33	Low-common mode differential signaling (LCMDS) 3.3 V	V_{ICM} – .125	V_{ICM} + .125	0.250	1.250	0		V
LCMDS25	LCMDS 2.5 V	V_{ICM} – .125	V_{ICM} + .125	0.250	1.250	0		V
LCMDS18	LCMDS 1.8 V	V_{ICM} – .125	V_{ICM} + .125	0.250	1.250	0		V
RSDS33	RSDS 3.3 V	V_{ICM} – .125	V_{ICM} + .125	0.250	1.250	0		V
RSDS25	RSDS 2.5 V	V_{ICM} – .125	V_{ICM} + .125	0.250	1.250	0		V
RSDS18	RSDS 1.8 V	V_{ICM} – .125	V_{ICM} + .125	0.250	1.250	0		V
MINILVDS33	Mini-LVDS 3.3 V	V_{ICM} – .125	V_{ICM} + .125	0.250	1.250	0		V
MINILVDS25	Mini-LVDS 2.5 V	V_{ICM} – .125	V_{ICM} + .125	0.250	1.250	0		V
MINILVDS18	Mini-LVDS 1.8 V	V_{ICM} – .125	V_{ICM} + .125	0.250	1.250	0		V
SUBLVDS33	Sub-LVDS 3.3 V	V_{ICM} – .125	V_{ICM} + .125	0.250	0.900	0		V
SUBLVDS25	Sub-LVDS 2.5 V	V_{ICM} – .125	V_{ICM} + .125	0.250	0.900	0		V
SUBLVDS18	Sub-LVDS 1.8 V	V_{ICM} – .125	V_{ICM} + .125	0.250	0.900	0		V

Standard	Description	V_L[1]	V_H[1]	V_{ID}[2]	V_{ICM}[2]	V_{MEAS}[3, 4]	V_{REF}[1, 5]	Unit
PPDS33	Point-to-point differential signaling 3.3 V	V_{ICM} – .125	V_{ICM} + .125	0.250	0.800	0		V
PPDS25	PPDS 2.5 V	V_{ICM} – .125	V_{ICM} + .125	0.250	0.800	0		V
PPDS18	PPDS 1.8 V	V_{ICM} – .125	V_{ICM} + .125	0.250	0.800	0		V
SLVS33	Scalable low-voltage signaling 3.3 V	V_{ICM} – .125	V_{ICM} + .125	0.250	0.200	0		V
SLVS25	SLVS 2.5 V	V_{ICM} – .125	V_{ICM} + .125	0.250	0.200	0		V
SLVS18	SLVS 1.8 V	V_{ICM} – .125	V_{ICM} + .125	0.250	0.200	0		V
HCSL33	High-speed current steering logic (HCSL) 3.3 V	V_{ICM} – .125	V_{ICM} + .125	0.250	0.350	0		V
HCSL25	HCSL 2.5 V	V_{ICM} – .125	V_{ICM} + .125	0.250	0.350	0		V
HCSL18	HCSL 1.8 V	V_{ICM} – .125	V_{ICM} + .125	0.250	0.350	0		V
BLVDSE25[6]	Bus LVDS 2.5 V	V_{ICM} – .125	V_{ICM} + .125	0.250	1.250	0		V
MLVDSE25[6]	Multipoint LVDS 2.5 V	V_{ICM} – .125	V_{ICM} + .125	0.250	1.250	0		V
LVPECL33	Low-voltage positive emitter coupled logic	V_{ICM} – .125	V_{ICM} + .125	0.250	1.650	0		V
LVPECLE33[6]	Low-voltage positive emitter coupled logic	V_{ICM} – .125	V_{ICM} + .125	0.250	1.650	0		V
SSTL25I	Differential SSTL 2.5 V Class I	V_{ICM} – .125	V_{ICM} + .125	0.250	1.250	0		V
SSTL25II	Differential SSTL 2.5 V Class II	V_{ICM} – .125	V_{ICM} + .125	0.250	1.250	0		V
SSTL18I	Differential SSTL 1.8 V Class I	V_{ICM} – .125	V_{ICM} + .125	0.250	0.900	0		V
SSTL18II	Differential SSTL 1.8 V Class II	V_{ICM} – .125	V_{ICM} + .125	0.250	0.900	0		V
SSTL15 I	Differential SSTL 1.5 V Class I	V_{ICM} – .125	V_{ICM} + .125	0.250	0.750	0		V
SSTL15II	Differential SSTL 1.5 V Class II	V_{ICM} – .125	V_{ICM} + .125	0.250	0.750	0		V
SSTL135I	Differential SSTL 1.35 V Class I	V_{ICM} – .125	V_{ICM} + .125	0.250	0.675	0		V
SSTL135II	Differential SSTL 1.35 V Class I	V_{ICM} – .125	V_{ICM} + .125	0.250	0.675	0		V
HSTL15I	Differential HSTL 1.5 V Class I	V_{ICM} – .125	V_{ICM} + .125	0.250	0.750	0		V

Standard	Description	V_L[1]	V_H[1]	V_{ID}[2]	V_{ICM}[2]	V_{MEAS}[3, 4]	V_{REF}[1, 5]	Unit
HSTL15II	Differential HSTL 1.5 V Class II	V_{ICM} – .125	V_{ICM} + .125	0.250	0.750	0		V
HSTL135I	Differential HSTL 1.35 V Class I	V_{ICM} – .125	V_{ICM} + .125	0.250	0.675	0		V
HSTL135II	Differential HSTL 1.35 V Class II	V_{ICM} – .125	V_{ICM} + .125	0.250	0.675	0		V
HSTL12I	Differential HSTL 1.2 V Class I	V_{ICM} – .125	V_{ICM} + .125	0.250	0.600	0		V
HSTL12II	Differential HSTL 1.2 V Class II	V_{ICM} – .125	V_{ICM} + .125	0.250	0.600	0		V
HSUL18I	Differential HSUL 1.8 V Class I	V_{ICM} – .125	V_{ICM} + .125	0.250	0.900	0		V
HSUL18II	Differential HSUL 1.8 V Class II	V_{ICM} – .125	V_{ICM} + .125	0.250	0.900	0		V
HSUL12I	Differential HSUL 1.2 V	V_{ICM} – .125	V_{ICM} + .125	0.250	0.600	0		V
POD12I	Differential POD 1.2 V Class I	V_{ICM} – .125	V_{ICM} + .125	0.250	0.840	0		V
POD12II	Differential POD 1.2 V Class II	V_{ICM} – .125	V_{ICM} + .125	0.250	0.840	0		V
MIPI25	Mobile Industry Processor Interface	V_{ICM} – .125	V_{ICM} + .125	0.250	0.200	0		V

1. Measurements are made at typical, minimum, and maximum V_{REF} values. Reported delays reflect worst-case of these measurements. V_{REF} values listed are typical. Input waveform switches between V_{IL} and V_{IH}. All rise and fall rates must be 1 V/ns for non-mixed mode input buffers as one-third the minimum period for mixed-mode input buffers.
2. Differential receiver standards all use 250 mV V_{ID} for timing. V_{CM} is different between different standards.
3. Input voltage level from which measurement starts.
4. The value given is the differential input voltage.
5. This is an input voltage reference that bears no relation to the V_{REF}/V_{MEAS} parameters found in IBIS models or shown in the figure Output Delay Measurement—Single-Ended Test Setup (see page 29).
6. Emulated bidirectional interface.

7.1.2 Output Delay Measurement Methodology

The following section provides information about the methodology for output delay measurement.

Table 25 • Output Delay Measurement Methodology

Standard	Description	R_{REF} (Ω)	C_{REF} (pF)	V_{MEAS} (V)	V_{REF} (V)
PCI	PCIE 3.3 V	25	10	1.65	
LVTTL	LVTTL 3.3 V	1M	0	1.65	
LVCMOS33	LVCMOS 3.3 V	1M	0	1.65	
LVCMOS25	LVCMOS 2.5 V	1M	0	1.25	
LVCMOS18	LVCMOS 1.8 V	1M	0	0.90	
LVCMOS15	LVCMOS 1.5 V	1M	0	0.75	
LVCMOS12	LVCMOS 1.2 V	1M	0	0.60	
SSTL25I	Stub-series terminated logic 2.5 V Class I	50	0	V_{REF}	1.25
SSTL25II	SSTL 2.5 V Class II	50	0	V_{REF}	1.25
SSTL18I	SSTL 1.8 V Class I	50	0	V_{REF}	0.9
SSTL18II	SSTL 1.8 V Class II	50	0	V_{REF}	0.9
SSTL15I	SSTL 1.5 V Class I	50	0	V_{REF}	0.75
SSTL15II	SSTL 1.5 V Class II	50	0	V_{REF}	0.75
SSTL135I	SSTL 1.35 V Class I	50	0	V_{REF}	0.675
SSTL135II	SSTL 1.35 V Class II	50	0	V_{REF}	0.675
HSTL15I	High-speed transceiver logic (HSTL) 1.5 V Class I	50	0	V_{REF}	0.75
HSTL15II	HSTL 1.5 V Class II	50	0	V_{REF}	0.75
HSTL135I	HSTL 1.35 V Class I	50	0	V_{REF}	0.675
HSTL135II	HSTL 1.35 V Class II	50	0	V_{REF}	0.675
HSTL12I	HSTL 1.2 V Class I	50	0	V_{REF}	0.6
HSTL12II	HSTL 1.2 V Class II	50	0	V_{REF}	0.6
HSUL18I	High-speed unterminated logic 1.8 V Class I	50	0	V_{REF}	0.9
HSUL18II	HSUL 1.8 V Class II	50	0	V_{REF}	0.9
HSUL12I	HSUL 1.2 V Class I	50	0	V_{REF}	0.6
POD12I	Pseudo open drain (POD) logic 1.2 V Class I	50	0	V_{REF}	0.84
POD12II	POD 1.2 V Class II	50	0	V_{REF}	0.84
LVDS33	LVDS 3.3 V	100	0	0[1]	0
LVDS25	LVDS 2.5 V	100	0	0[1]	0
LCMDS33	Low-common mode differential signaling (LCMDS) 3.3 V	100	0	0[1]	0
LCMDS25	LCMDS 2.5 V	100	0	0	0
RSDS33	Reduced swing differential signaling 3.3 V	100	0	0[1]	0

Standard	Description	R_{REF} (Ω)	C_{REF} (pF)	V_{MEAS} (V)	V_{REF} (V)
RSDS25	RSDS 2.5 V	100	0	0[1]	0
MINILVDS33	Mini-LVDS 3.3 V	100	0	0[1]	0
MINILVDS25	Mini-LVDS 2.5 V	100	0	0[1]	0
SUBLVDS33	Sub-LVDS 3.3 V	100	0	0[1]	0
SUBLVDS25	Sub-LVDS 2.5 V	100	0	0[1]	0
PPDS33	Point-to-point differential signaling 3.3 V	100	0	0[1]	0
PPDS25	PPDS 2.5 V	100	0	0[1]	0
SLVS33	Scalable low-voltage signaling 3.3 V	100	0	0[1]	0
SLVS25	SLVS 2.5 V	100	0	0[1]	0
SLVSE15	SLVS 1.5 V	100	0	0[1]	0
HCSL33	High-speed current steering logic 3.3 V	100	0	0[1]	0
HCSL25	HCSL 2.5 V	100	0	0[1]	0
BUSLVDSE25	Bus LVDS	100	0	0[1]	0
MLVDSE25	Multipoint LVDS 2.5 V	100	0	0[1]	0
LVPECLE33	Low-voltage positive emitter-coupled logic	100	0	0[1]	0
MIPIE25	Mobile industry processor interface 2.5 V	100	0	0[1]	0
SSTL25I	Differential SSTL 2.5 V Class I	50	0	0[1]	0
SSTL25II	Differential SSTL 2.5 V Class II	50	0	0[1]	0
SSTL18I	Differential SSTL 1.8 V Class I	50	0	0[1]	0
SSTL18II	Differential SSTL 1.8 V Class II	50	0	0[1]	0
SSTL15I	Differential SSTL 1.5 V Class I	50	0	0[1]	0
SSTL15II	Differential SSTL 1.5 V Class II	50	0	0[1]	0
SSTL135I	Differential SSTL 1.35 V Class I	50	0	0[1]	0
SSTL135II	Differential SSTL 1.35 V Class II	50	0	0[1]	0
HSTL15I	Differential HSTL 1.5 V Class I	50	0	0[1]	0
HSTL15II	Differential HSTL 1.5 V Class II	50	0	0[1]	0
HSTL135I	Differential HSTL 1.35 V Class I	50	0	0[1]	0
HSTL135II	Differential HSTL 1.35 V Class II	50	0	0[1]	0
HSTL12I	Differential HSTL 1.2 V Class I	50	0	0[1]	0
HSTL12II	Differential HSTL 1.2 V Class II	50	0	0[1]	0
HSUL18I	Differential HSUL 1.8 V Class I	50	0	0[1]	0
HSUL18II	Differential HSUL 1.8 V Class II	50	0	0[1]	0
HSUL12I	Differential HSUL 1.2 V Class I	50	0	0[1]	0
POD12I	Differential POD 1.2 V Class II	50	0	0[1]	0
POD12II	Differential POD 1.2 V Class II	50	0	0[1]	0

1. The value given is the differential output voltage.

Figure 1 • Output Delay Measurement—Single-Ended Test Setup

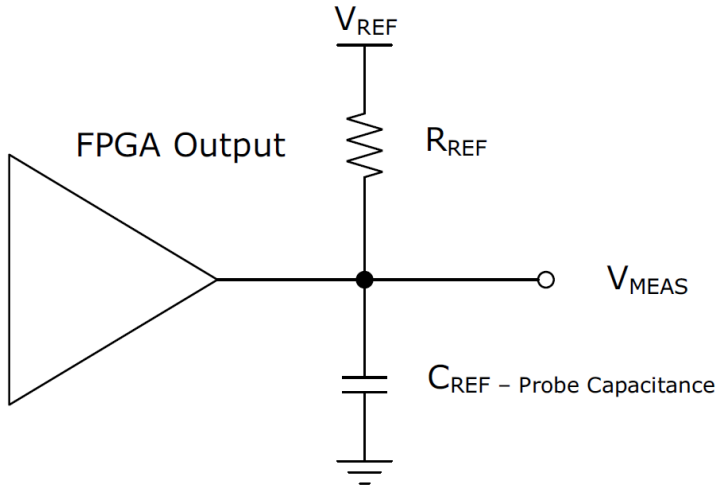

Figure 2 • Output Delay Measurement—Differential Test Setup

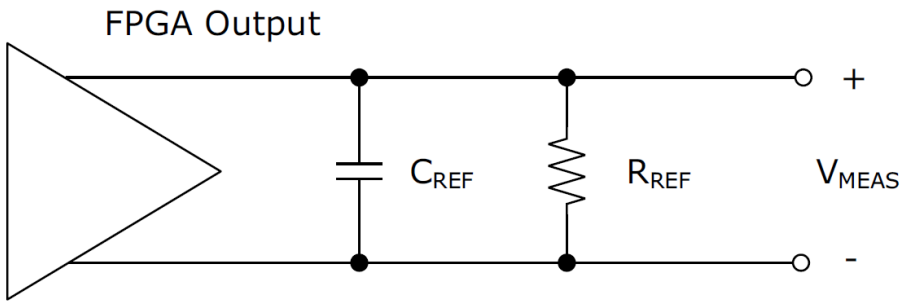

7.1.3 Input Buffer Speed

The following tables describe input buffer speed.

Table 26 • HSIO Maximum Input Buffer Speed

Standard	STD	–1	Unit
LVDS18	1250	1250	Mbps
LCMDS18	1250	1250	Mbps
HCSL18	800	800	Mbps
RSDS18	800	800	Mbps
MINILVDS18	800	800	Mbps
SUBLVDS18	800	800	Mbps
PPDS18	800	800	Mbps
SLVS18	800	800	Mbps
SSTL18I	800	1066	Mbps
SSTL18II	800	1066	Mbps
SSTL15I	1066	1333	Mbps

Standard	STD	–1	Unit
SSTL15II	1066	1333	Mbps
SSTL135I	1066	1333	Mbps
SSTL135II	1066	1333	Mbps
HSTL15I	900	1100	Mbps
HSTL15II	900	1100	Mbps
HSTL135I	1066	1066	Mbps
HSTL135II	1066	1066	Mbps
HSUL18I	400	400	Mbps
HSUL18II	400	400	Mbps
HSUL12I	1066	1333	Mbps
HSTL12I	1066	1266	Mbps
HSTL12II	1066	1266	Mbps
POD12I	1333	1600	Mbps
POD12II	1333	1600	Mbps
LVCMOS18 (12 mA)	500	500	Mbps
LVCMOS15 (10 mA)	500	500	Mbps
LVCMOS12 (8 mA)	300	300	Mbps

1. Performance is achieved with V_{ID} ≥200 mV.

Table 27 • GPIO Maximum Input Buffer Speed

Standard	STD	–1	Unit
LVDS25/LVDS33/LCMDS25/LCMDS33	1250	1600	Mbps
RSDS25/RSDS33	800	800	Mbps
MINILVDS25/MINILVDS33	800	800	Mbps
SUBLVDS25/SUBLVDS33	800	800	Mbps
PPDS25/PPDS33	800	800	Mbps
SLVS25/SLVS33	800	800	Mbps
SLVSE15	800	800	Mbps
HCSL25/HCSL33	800	800	Mbps
BUSLVDSE25	800	800	Mbps
MLVDSE25	800	800	Mbps
LVPECL33	800	800	Mbps
SSTL25I	800	800	Mbps
SSTL25II	800	800	Mbps
SSTL18I	800	800	Mbps
SSTL18II	800	800	Mbps
SSTL15I	800	1066	Mbps
SSTL15II	800	1066	Mbps
HSTL15I	800	900	Mbps

Standard	STD	–1	Unit
HSTL15II	800	900	Mbps
HSUL18I	400	400	Mbps
HSUL18II	400	400	Mbps
PCI	500	500	Mbps
LVTTL	500	500	Mbps
LVCMOS33	500	500	Mbps
LVCMOS25	500	500	Mbps
LVCMOS18	500	500	Mbps
LVCMOS15	500	500	Mbps
LVCMOS12	300	300	Mbps
MIPI25			Mbps

1. All SSTLD/HSTLD/HSULD/LVSTLD/POD type receivers use the LVDS differential receiver.
2. Performance is achieved with V_{ID} ≥200 mV.

7.1.4 Output Buffer Speed

The following tables describe output buffer speed.

Table 28 • HSIO Maximum Output Buffer Speed

Standard	STD	–1	Unit
SSTL18I	800	1066	Mbps
SSTL18II	800	1066	Mbps
SSTL18I (differential)	800	1066	Mbps
SSTL18II (differential)	800	1066	Mbps
SSTL15I	1066	1333	Mbps
SSTL15II	1066	1333	Mbps
SSTL15I (differential)	1066	1333	Mbps
SSTL15II (differential)	1066	1333	Mbps
SSTL135I	1066	1333	Mbps
SSTL135II	1066	1333	Mbps
SSTL135I (differential)	1066	1333	Mbps
SSTL135II (differential)	1066	1333	Mbps
HSTL15I	900	1100	Mbps
HSTL15II	900	1100	Mbps
HSTL15I (differential)	900	1100	Mbps
HSTL15II (differential)	900	1100	Mbps
HSTL135I	1066	1066	Mbps
HSTL135II	1066	1066	Mbps
HSTL135I (differential)	1066	1066	Mbps
HSTL135II (differential)	1066	1066	Mbps

Standard	STD	–1	Unit
HSUL18I	400	400	Mbps
HSUL18II	400	400	Mbps
HSUL18I (differential)	400	400	Mbps
HSUL18II (differential)	400	400	Mbps
HSUL12I	1066	1333	Mbps
HSUL12I (differential)	1066	1333	Mbps
HSTL12I	1066	1266	Mbps
HSTL12II	1066	1266	Mbps
HSTL12I (differential)	1066	1266	Mbps
HSTL12II (differential)	1066	1266	Mbps
POD12I	1333	1600	Mbps
POD12II	1333	1600	Mbps
LVCMOS18 (12 mA)	500	500	Mbps
LVCMOS15 (10 mA)	500	500	Mbps
LVCMOS12 (8 mA)	250	300	Mbps

Table 29 • GPIO Maximum Output Buffer Speed

Standard	STD	–1	Unit
LVDS25/LCMDS25	1250	1250	Mbps
LVDS33/LCMDS33	1250	1600	Mbps
RSDS25	800	800	Mbps
MINILVDS25	800	800	Mbps
SUBLVDS25	800	800	Mbps
PPDS25	800	800	Mbps
SLVSE15	500	500	Mbps
BUSLVDSE25	500	500	Mbps
MLVDSE25	500	500	Mbps
LVPECLE33	500	500	Mbps
SSTL25I	800	800	Mbps
SSTL25II	800	800	Mbps
SSTL25I (differential)	800	800	Mbps
SSTL25II (differential)	800	800	Mbps
SSTL18I	800	800	Mbps
SSTL18II	800	800	Mbps
SSTL18I (differential)	800	800	Mbps
SSTL18II (differential)	800	800	Mbps
SSTL15I	800	1066	Mbps
SSTL15II	800	1066	Mbps
SSTL15I (differential)	800	1066	Mbps

Standard	STD	–1	Unit
SSTL15II (differential)	800	1066	Mbps
HSTL15I	900	900	Mbps
HSTL15II	900	900	Mbps
HSTL15I (differential)	900	900	Mbps
HSTL15II (differential)	900	900	Mbps
HSUL18I	400	400	Mbps
HSUL18II	400	400	Mbps
HSUL18I (differential)	400	400	Mbps
HSUL18II (differential)	400	400	Mbps
PCI	500	500	Mbps
LVTTL (20 mA)	500	500	Mbps
LVCMOS33 (20 mA)	500	500	Mbps
LVCMOS25 (16 mA)	500	500	Mbps
LVCMOS18 (12 mA)	500	500	Mbps
LVCMOS15 (10 mA)	500	500	Mbps
LVCMOS12 (8 mA)	250	300	Mbps
MIPIE25			Mbps

7.1.5 Maximum PHY Rate for Memory Interface IP

The following tables describe the maximum PHY rate for memory interface IP.

Table 30 • Maximum PHY Rate for Memory Interfaces IP for HSIO Banks

Memory Standard	Gearing Ratio	V_{DDAUX}	V_{DDI}	STD (Mbps)	–1 (Mbps)	Fabric STD (MHz)	Fabric –1 (MHz)
DDR4	8:1	1.8 V	1.2 V	1333	1600	167	200
DDR3	8:1	1.8 V	1.5 V	1067	1333	133	167
DDR3L[1]	8:1	1.8 V	1.35 V	1067	1333	133	167
LPDDR3	8:1	1.8 V	1.2 V	800	1333	133	167
QDRII+	8:1	1.8 V	1.5 V	900	1100	112.5	137.5
RLDRAM3[1]	8:1	1.8 V	1.35 V	1067	1067	133	133
RLDRAM3[1]	4:1	1.8 V	1.35 V	667	800	167	200
RLDRAM3[1]	2:1	1.8 V	1.35 V	333	400	167	200
RLDRAMII [1]	8:1	1.8 V	1.8 V	800	1067	100	133
RLDRAMII [1]	4:1	1.8 V	1.8 V	667	800	167	200
RLDRAMII [1]	2:1	1.8 V	1.8 V	333	400	167	200

1. Simulation data only. Microchip does not provide a soft controller for RLDRAMII, RLDRAM3, or DDR3L.

Table 31 • Maximum PHY Rate for Memory Interfaces IP for GPIO Banks

Memory Standard	Gearing Ratio	V_{DDAUX}	V_{DDI}	STD (Mbps)	–1 (Mbps)	Fabric STD (MHz)	Fabric –1 (MHz)
DDR3	8:1	2.5 V	1.5 V	800	1067	100	133
QDRII+	8:1	2.5 V	1.5 V	900	900	113	113
RLDRAMII[1]	4:1	2.5 V	1.8 V	800	800	200	200
RLDRAMII[1]	2:1	2.5 V	1.8 V	400	400	200	200

1. Simulation data only. RLDRAMII is currently not supported with a soft IP controller.

7.1.6 User I/O Switching Characteristics

The following section describes user I/O switching characteristics. For more information about user I/O timing, see the PolarFire I/O Timing Spreadsheet (to be released).

7.1.6.1 I/O Digital

The following tables describe I/O digital.

Table 32 • I/O Digital Receive Single-Data Rate Switching Characteristics

Parameter	Interface Name	Topology	I/O Type	STD (MHz)	–1 (MHz)	STD (Mbps)	–1 (Mbps)	Clock-to-Data Condition
Input F_{MAX}	RX_SDR_G_A	Rx SDR	HSIO, GPIO	500	500	500	500	From a global clock source, aligned
Input F_{MAX}	RX_SDR_R_A	Rx SDR	HSIO, GPIO	250	250	250	250	From a regional clock source, aligned
Input F_{MAX}	RX_SDR_G_C	Rx SDR	HSIO, GPIO	500	500	500	500	From a global clock source, centered
Input F_{MAX}	RX_SDR_R_C	Rx SDR	HSIO, GPIO	250	250	250	250	From a regional clock source, centered

Table 33 • I/O Digital Receive Double-Data Rate Switching Characteristics

Parameter	Interface Name	Topology	I/O Type	STD (MHz)	–1 (MHz)	STD (Mbps)	–1 (Mbps)	Clock-to-Data Condition
Input F_{MAX}	RX_DDR_G_A	Rx DDR	HSIO	335	345	670	690	From a global clock source, aligned
			GPIO	310	325	620	650	
Input F_{MAX}	RX_DDR_R_A	Rx DDR	HSIO	250	250	500	500	From a regional clock source, aligned
			GPIO	250	250	500	500	
Input F_{MAX}	RX_DDR_G_C	Rx DDR	HSIO	335	345	670	690	From a global clock source, centered
			GPIO	310	325	620	650	
Input F_{MAX}	RX_DDR_R_C	Rx DDR	HSIO	250	250	500	500	From a regional clock source, centered
			GPIO	250	250	500	500	
Input F_{MAX} 2:1	RX_DDRX_B_G_A		HSIO	350	350	700	700	

Parameter	Interface Name	Topology	I/O Type	STD (MHz)	–1 (MHz)	STD (Mbps)	–1 (Mbps)	Clock-to-Data Condition
		Rx DDR digital mode	GPIO	300	310	600	620	From a HS_IO_CLK clock source, aligned, global fabric clock
Input F_{MAX} 4:1	RX_DDRX_B_G_A	Rx DDR digital mode	HSIO	350	350	700	700	From a HS_IO_CLK clock source, aligned, global fabric clock
			GPIO	300	310	600	620	
Input F_{MAX} 3.5:1	RX_DDRX_B_G_FA	Rx DDR digital mode for fractional	HSIO	350	350	700	700	From a HS_IO_CLK clock source, aligned, global fabric clock, fractional input
			GPIO	320	320	640	640	
Input F_{MAX} 2:1	RX_DDRX_B_G_C	Rx DDR digital mode	HSIO	350	350	700	700	From a HS_IO_CLK clock source, centered, global fabric clock
			GPIO	300	310	600	620	
Input F_{MAX} 4:1	RX_DDRX_B_G_C	Rx DDR digital mode	HSIO	350	350	700	700	From a HS_IO_CLK clock source, centered, global fabric clock
			GPIO	300	310	600	620	
Input F_{MAX} 4:1	RX_DDRX_B_G_C_ MIPI	Rx DDR digital mode for MIPI	GPIO					From a HS_IO_CLK clock source, centered, global fabric clock
Input F_{MAX} 2:1	RX_DDRX_B_R_A	Rx DDR digital mode	HSIO	220	270	440	540	From a HS_IO_CLK clock source, aligned, regional fabric clock
			GPIO	205	250	410	500	
Input F_{MAX} 4:1	RX_DDRX_B_R_A	Rx DDR digital mode	HSIO	220	270	440	540	From a HS_IO_CLK clock source, aligned, regional fabric clock
			GPIO	205	250	410	500	
Input F_{MAX} 2:1	RX_DDRX_B_R_C	Rx DDR digital mode	HSIO	220	270	440	540	From a HS_IO_CLK clock source, centered, regional fabric clock
			GPIO	205	250	410	500	
Input F_{MAX} 4:1	RX_DDRX_B_R_C	Rx DDR digital mode	HSIO	220	270	440	540	From a HS_IO_CLK clock source, centered, regional fabric clock
			GPIO	205	250	410	500	

Table 34 • I/O Digital Transmit Single-Data Rate Switching Characteristics

Parameter	Interface Name	Topology	I/O Type	STD (MHz)	–1 (MHz)	STD (Mbps)	–1 (Mbps)	Forwarded Clock-to-Data Skew
Output F_{MAX}	TX_SDR_G_A	Tx SDR	HSIO, GPIO	500	500	500	500	From a global clock source, aligned[1]
	TX_SDR_G_C	Tx SDR	HSIO, GPIO	500	500	500	500	From a global clock source, centered[1]

1. A centered clock-to-data interface can be created with a negedge launch of the data.

Table 35 • I/O Digital Transmit Double-Data Rate Switching Characteristics

Parameter	Interface Name	Topology	I/O Type	STD (MHz)	–1 (MHz)	STD (Mbps)	–1 (Mbps)	Forwarded Clock-to-Data Skew
Output F_{MAX}	TX_DDR_G_A	Tx DDR	HSIO, GPIO	500	500	1000	1000	From a global clock source, aligned
	TX_DDR_G_C	Tx DDR	HSIO, GPIO	500	500	1000	1000	From a global clock source, centered
Output F_{MAX} 2:1	TX_DDRX _B_A	Tx DDR digital mode	HSIO	667	800	1333	1600	From a HS_IO_CLK clock source, aligned
Output F_{MAX} 4:1	TX_DDRX_B_A	Tx DDR digital mode	HSIO	667	800	1333	1600	From a HS_IO_CLK clock source, aligned
Output F_{MAX} 2:1	TX_DDRX_B_C	Tx DDR digital mode	HSIO	667	800	1333	1600	From a HS_IO_CLK clock source, centered with PLL
Output F_{MAX} 4:1	TX_DDRX_B_C	Tx DDR digital mode	HSIO	667	800	1333	1600	From a HS_IO_CLK clock source, centered with PLL
Output F_{MAX} 2:1	TX_DDRX_B_A	Tx DDR digital mode	GPIO	625	800	1250	1600	From a HS_IO_CLK clock source, aligned
Output F_{MAX} 4:1	TX_DDRX_B_A	Tx DDR digital mode	GPIO	625	800	1250	1600	From a HS_IO_CLK clock source, aligned
Output F_{MAX} 2:1	TX_DDRX_B_C	Tx DDR digital mode	GPIO	625	800	1250	1600	From a HS_IO_CLK clock source, centered with PLL
Output F_{MAX} 4:1	TX_DDRX_B_C	Tx DDR digital mode	GPIO	625	800	1250	1600	From a HS_IO_CLK clock source, centered with PLL
Output F_{MAX} 4:1	TX_DDRX_B_C_ MIPI	Tx DDR digital mode for MIPI	GPIO					From a HS_IO_CLK clock source, centered with PLL

Table 36 • Programmable Delay

Parameter	STD Min	STD Typ	STD Max	–1 Min	–1 Typ	–1 Max	Unit
In delay, out delay, DLL delay step sizes	12.7	30	35	12.7	25	29.5	ps

Figure 3 • LVDS Jitter Tolerance Plot

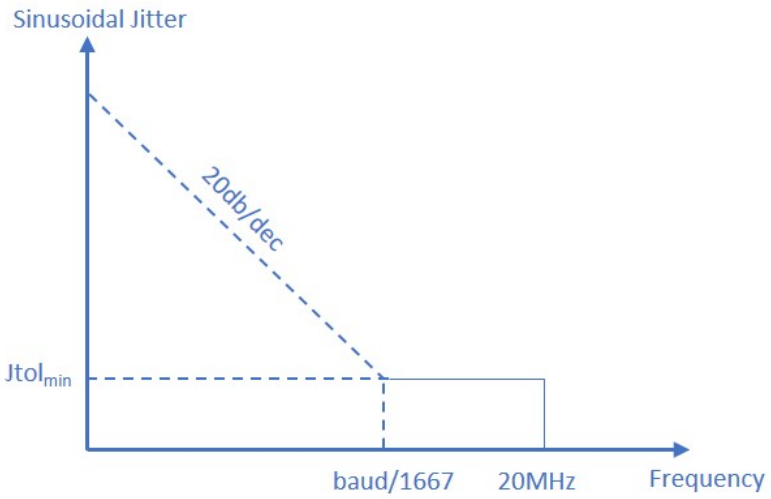

Table 37 • I/O CDR Switching Characteristics

Buffer Type	I/O Configuration	Min Data Rate (Mbps)	Max Data Rate (Mbps)	Max Tx to Rx Frequency Offset (ppm)	$Jtol_{min}$ (UI)
HSIO[1, 2]	LVDS	266	1250	±200	0.08
HSIO[1, 2]	LVDS	266	1250	±100	0.1
GPIO[1, 3]	LVDS	266	1250	±100	0.1

1. Jitter tolerance of applied sinusoidal jitter from 1 KHz to 120 MHz, as shown in figure LVDS Jitter Tolerance Plot (see page 37). It is measured in addition to a stressed eye of T_j= 0.24 UI with V_{ICM} of 1.25 V and V_{IDmin} of 250 mV, with the CDR operating at a rate of 1250 Mbps plus or minus the ppm offset listed.
2. HSIO LVDS uses an external 100 Ω differential termination resistor. For more information, see LVDS specification in table Differential DC Input Levels (see page 16).
3. GPIO LVDS uses an internal 100 Ω differential termination resistor. For more information, see LVDS specification in table Differential DC Input Levels (see page 16).

7.2 Clocking Specifications

This section describes the PLL and DLL clocking and oscillator specifications.

7.2.1 Clocking

The following table describes clocking specifications.

Table 38 • Global and Regional Clock Characteristics (–40 °C to 100 °C)

Parameter	Symbol	V_{DD} = 1.0 V STD	V_{DD} = 1.0 V –1	V_{DD} = 1.05 V STD	V_{DD} = 1.05 V –1	Unit	Condition
Global clock F_{MAX}	F_{MAXG}	500	500	500	500	MHz	
Regional clock F_{MAX}	F_{MAXR}	375	375	375	375	MHz	Transceiver interfaces only
	F_{MAXR}	250	250	250	250	MHz	All other interfaces
Global clock duty cycle distortion	T_{DCDG}	190	190	190	190	ps	At 500 MHz
Regional clock duty cycle distortion	T_{DCDR}	120	120	120	120	ps	At 250 MHz

The following table describes clocking specifications from –40 °C to 100 °C.

Table 39 • High-Speed I/O Clock Characteristics (–40 °C to 100 °C)

Parameter	Symbol	V_{DD} = 1.0 V STD	V_{DD} = 1.0 V –1	V_{DD} = 1.05 V STD	V_{DD} = 1.05 V –1	Unit	Condition
High-speed I/O clock F_{MAX}	F_{MAXB}	1000	1250	1000	1250	MHz	HSIO and GPIO
High-speed I/O clock skew[1]	F_{SKEWB}	30	20	30	20	ps	HSIO without bridging
	F_{SKEWB}	See table HSIO Clock Skew with Bridging (see page 39)				ps	HSIO with bridging
	F_{SKEWB}	45	35	45	35	ps	GPIO without bridging
	F_{SKEWB}	75	60	75	60	ps	GPIO with bridging
High-speed I/O clock duty cycle distortion[2]	T_{DCB}	90	90	90	90	ps	HSIO without bridging
	T_{DCB}	115	115	115	115	ps	HSIO with bridging
	T_{DCB}	90	90	90	90	ps	GPIO without bridging
	T_{DCB}	115	115	115	115	ps	GPIO with bridging

1. F_{SKEWB} is the worst-case clock-tree skew observable between sequential I/O elements. Clock-tree skew is significantly smaller at I/O registers close to each other because they are fed by the same or adjacent clock-tree branches. Use the Microsemi Timing Analyzer tool to evaluate clock skew specific to the design.

2. Parameters listed in this table correspond to the worst-case duty cycle distortion observable at the I/O flip flops. IBIS should be used to calculate any additional duty cycle distortion that might be caused by asymmetrical rise/fall times for any I/O standard.

The following table describes high-speed I/O clock skew (F_{SKEWB}) with bridging from –40 °C to 100 °C.

Note: F_{SKEWB} is the worst-case clock-tree skew observable between sequential I/O elements. Clock-tree skew is significantly smaller at I/O registers close to each other and fed by the same or adjacent clock-tree branches. Use the Microsemi Timing Analyzer tool to evaluate clock skew specific to the design.

Table 40 • HSIO Clock Skew with Bridging (–40 °C to 100 °C)

Device	Total I/O Banks	Bridging Source	V_{DD} = 1.0 V STD	V_{DD} = 1.0 V –1	V_{DD} = 1.05 V STD	V_{DD} = 1.05 V –1	Unit
MPF100T	2	NNW[1]	120	80	120	80	ps
	2	NNE[2]	110	70	110	70	ps
MPF200T	2	NNW[1]	120	80	120	80	ps
	2	NNE[2]	110	70	110	70	ps
MPF300T	3	NNW[1]	120	80	120	80	ps
	3	NNE[2]	280	200	280	200	ps
MPF500T	3	NNW[1]	125	85	125	85	ps
	3	NNE[2]	300	220	300	220	ps

1. NNW source designates bridging that originates from the North West Corner or PIOs inside I/O bank 0 (the most western I/O bank at the north edge).
2. NNE source designates bridging that originates from the North East Corner or PIOs inside I/O bank 1 (the most eastern I/O bank at the north edge).

7.2.2 PLL

The following table describes PLL.

Table 41 • PLL Electrical Characteristics

Parameter	Symbol	Min	Typ	Max	Unit	Condition
Input clock frequency (integer mode)	F_{INI}	1		1250	MHz	
Input clock frequency (fractional mode)	F_{INF}	10		1250	MHz	
Minimum reference or feedback pulse width[1]	$F_{INPULSE}$	200			ps	
Frequency at the Frequency Phase Detector (PFD) (integer mode)	F_{PHDETI}	1		312	MHz	
Frequency at the PFD (fractional mode)	F_{PHDETF}	10		225	MHz	
Allowable input duty cycle	F_{INDUTY}	25		75	%	

Parameter	Symbol	Min	Typ	Max	Unit	Condition
Maximum input period clock jitter (reference and feedback clocks)[2]	F_{MAXINJ}		120	1000	ps	
PLL VCO frequency	F_{VCO}	800		5000	MHz	
Loop bandwidth (Int)[3]	F_{BW}	F_{PHDET}/55	F_{PHDET}/44	F_{PHDET}/30	MHz	
Loop bandwidth (FRAC)[3]	F_{BW}	F_{PHDET}/91	F_{PHDET}/77	F_{PHDET}/56	MHz	
Static phase offset of the PLL outputs[4]	T_{SPO}			Max (±60 ps, ±0.5 degrees)	ps	
PLL output period jitter[10]	$T_{OUTJITTER}$			0.025*output_ period	ps	1.5 MHz ≤ Fout < 15 MHz
				135	ps	Fout ≥ 15 MHz
PLL output duty cycle precision	$T_{OUTDUTY}$	48		54	%	
PLL lock time[5]	T_{LOCK}			Max (6.0 µs, 625 PFD cycles)	µs	
PLL unlock time[6]	T_{UNLOCK}	2		8	PFD cycles	
PLL output frequency	F_{OUT}	0.050		1250	MHz	
Minimum power-down pulse width	T_{MPDPW}	1			µs	
Maximum delay in the feedback path[7]	F_{MAXDFB}			1.5	PFD cycles	
Spread spectrum modulation spread[8]	Mod_Spread	0.1		3.1	%	
Spread spectrum modulation frequency[9]	Mod_Freq	F_{PHDETF}/ (128x63)	32	F_{PHDETF}/(128)	KHz	

1. Minimum time for high or low pulse width.
2. Maximum jitter the PLL can tolerate without losing lock.
3. Default bandwidth setting of BW_PROP_CTRL = "01" for Integer and Fraction modes leads to the typical estimated bandwidth. This bandwidth can be lowered by setting BW_PROP_CTRL = "00" and can be increased if BW_PROP_CTRL = "10" and will be at the highest value if BW_PROP_CTRL = "11".
4. Maximum (±3-Sigma) phase error between any two outputs with nominally aligned phases.
5. Input clock cycle is REFDIV/F_{REF}. For example, F_{REF} = 25 MHz, REFDIV = 1, lock time = 10.0 (assumes LOCKCOUNTSEL setting = 4'd8 (256 cycles)).
6. Unlock occurs if two cycles slip within LOCKCOUNT/4 PFD cycles.
7. Maximum propagation delay of external feedback path in Deskew mode.
8. Programmable capability for depth of down spread or center spread modulation.
9. Programmable modulation rate based on the modulation divider setting (1 to 63).
10. Period jitter is measured at the output of the device using HSUL12 output buffers and includes the jitter effects of the reference clock source, PLL, clock routing networks, and output buffer. PLL is configured with internal feedback enabled and in integer mode. FPGA fabric is active during testing (75% utilization).

Note: In order to meet all datasheet specifications, the PLL must be programmed such that the PLL Loop Bandwidth < (0.0017 * VCO Frequency) – 0.4863 MHz. The Libero PLL configuration tool will enforce this rule when creating PLL configurations.

7.2.3 DLL

The following table provides information about DLL.

Table 42 • DLL Electrical Characteristics

Parameter[1]	Symbol	Min	Typ	Max	Unit
Input reference clock frequency	F_{INF}	133		800	MHz
Input feedback clock frequency	F_{INFDBF}	133		800	MHz
Primary output clock frequency	F_{OUTPF}	133		800	MHz
Secondary output clock frequency[2]	F_{OUTSF}	33.3		800	MHz
Input clock cycle-to-cycle jitter	F_{INJ}			200	ps
Output clock cycle-to-cycle jitter (with clean input clock)	$T_{OUTJITTERCC}$			Max (250 ps, 15% of clock period)	ps
Output clock period jitter (with clean input clock)	$T_{OUTJITTERP}$			Max (300 ps, 20% of clock period)	ps
Output clock-to-clock skew between two outputs with the same phase settings	T_{SKEW}			±150	ps
DLL lock time	T_{LOCK}	16		16K	Reference clock cycles
Minimum reset pulse width	T_{MRPW}	3			ns
Minimum input pulse width[3]	T_{MIPW}	20			ns
Minimum input clock pulse width high	T_{MPWH}	400			ps
Minimum input clock pulse width low	T_{MPWL}	400			ps
Delay step size	T_{DEL}	12.7	30	35	ps
Maximum delay block delay[4]	T_{DELMAX}	1.8		4.8	ns
Output clock duty cycle (with 50% duty cycle input)[5]	T_{DUTY}	40		60	%
Output clock duty cycle (with 50% duty cycle input)[6]	T_{DUTY50}	45		55	%

1. For all DLL modes.
2. Secondary output clock divided by four option.
3. On load, direction, move, hold, and update input signals.
4. 128 delay taps in one delay block.
5. Without duty cycle correction enabled.
6. With duty cycle correction enabled.

7.2.4 RC Oscillators

The following tables describe internal RC clock resources for user designs. They also describe system design with RF front-end information about emitters generated on-chip to support programming operations.

Table 43 • 2 MHz RC Oscillator Electrical Characteristics

Parameter	Symbol	Min	Typ	Max	Unit
Operating frequency	RC_{2FREQ}		2		MHz
Accuracy	RC_{2FACC}	–4		4	%
Duty cycle	RC_{2DC}	46		54	%
Peak-to-peak output period jitter	RC_{2PJIT}		5	10	ns
Peak-to-peak output cycle-to-cycle jitter	RC_{2CJIT}		5	10	ns
Operating current (V_{DD25})	RC_{2IVPPA}			60	µA
Operating current (V_{DD})	RC_{2IVDD}			2.6	µA

Table 44 • 160 MHz RC Oscillator Electrical Characteristics

Parameter	Symbol	Min	Typ	Max	Unit
Operating frequency	RC_{SCFREQ}		160		MHz
Accuracy	RC_{SCFACC}	–4		4	%
Duty cycle	RC_{SCDC}	47		52	%
Peak-to-peak output period jitter	RC_{SCPJIT}			600	ps
Peak-to-peak output cycle-to-cycle jitter	RC_{SCCJIT}			172	ps
Operating current (V_{DD25})	RC_{SCVPPA}			599	µA
Operating current (V_{DD18})	RC_{SCVPP}			0.1	µA
Operating current (V_{DD})	RC_{SCVDD}			60.7	µA

7.3 Fabric Specifications

The following section describes specifications for the fabric.

7.3.1 Math Blocks

The following table lists the maximum operating frequency (F_{MAX}) of the math block in the extended commercial temperature range (0 °C to 100 °C).

Table 45 • Math Block Performance Extended Commercial Range (0 °C to 100 °C)

Modes	V_{DD} = 1.0 V – STD	V_{DD} = 1.0 V – 1	V_{DD} = 1.05 V – STD	V_{DD} = 1.05 V – 1	Unit
18 × 18 multiplication	370	470	440	500	MHz
18 × 18 multiplication summed with 48-bit input	370	470	440	500	MHz
18 × 19 multiplier pre-adder ROM mode	365	465	435	500	MHz
Two 9 × 9 multiplication	370	470	440	500	MHz
9 × 9 dot product (DOTP)	370	470	440	500	MHz
Complex 18 × 19 multiplication	360	455	430	500	MHz

The following table lists the maximum operating frequency (F_{MAX}) of the math block in the industrial temperature range (–40 °C to 100 °C).

Table 46 • Math Block Performance Industrial Range (–40 °C to 100 °C)

Modes	V_{DD} = 1.0 V – STD	V_{DD} = 1.0 V – 1	V_{DD} = 1.05 V – STD	V_{DD} = 1.05 V – 1	Unit
18 × 18 multiplication	365	465	435	500	MHz
18 × 18 multiplication summed with 48-bit input	365	465	435	500	MHz
18 × 19 multiplier pre-adder ROM mode	355	460	430	500	MHz
Two 9 × 9 multiplication	365	465	435	500	MHz
9 × 9 DOTP	365	465	435	500	MHz
Complex 18 × 19 multiplication	350	450	425	500	MHz

7.3.2 SRAM Blocks

The following table lists the maximum operating frequency (F_{MAX}) of the LSRAM block in the industrial temperature range (–40 °C to 100 °C).

Table 47 • LSRAM Performance Industrial Temperature Range (–40 °C to 100 °C)

V_{DD} = 1.0 V – STD	V_{DD} = 1.0 V – 1	V_{DD} = 1.05 V – STD	V_{DD} = 1.05 V – 1	Unit	Condition
343	428	343	428	MHz	Two-port, all supported widths, pipelined, simple-write, and write-feed-through
309	428	309	428	MHz	Two-port, all supported widths, non-pipelined, simple-write, and write-feed-through
343	428	343	428	MHz	Dual-port, all supported widths, pipelined, simple-write, and write-feed-through
309	428	309	428	MHz	Dual-port, all supported widths, non-pipelined, simple-write, and write-feed-through
343	428	343	428	MHz	Two-port pipelined ECC mode, pipelined, simple-write, and write-feed-through
279	295	279	295	MHz	Two-port non-pipelined ECC mode, pipelined, simple-write, and write-feed-through
343	428	343	428	MHz	Two-port pipelined ECC mode, non-pipelined, simple-write, and write-feed-through
196	285	196	285	MHz	Two-port non-pipelined ECC mode, non-pipelined, simple-write, and write-feed-through
274	285	274	285	MHz	Two-port, all supported widths, pipelined, and read-before-write
274	285	274	285	MHz	Two-port, all supported widths, non-pipelined, and read-before-write
274	285	274	285	MHz	Dual-port, all supported widths, pipelined, and read-before-write
274	285	274	285	MHz	Dual-port, all supported widths, non-pipelined, and read-before-write
274	285	274	285	MHz	Two-port pipelined ECC mode, pipelined, and read-before-write
274	285	274	285	MHz	Two-port non-pipelined ECC mode, pipelined, and read-before-write
274	285	274	285	MHz	Two-port pipelined ECC mode, non-pipelined, and read-before-write
193	285	193	285	MHz	Two-port non-pipelined ECC mode, non-pipelined, and read-before-write

The following table lists the maximum operating frequency (F_{MAX}) of the µSRAM block in the industrial temperature range (–40 °C to 100 °C).

Table 48 • µSRAM Performance

Parameter	Symbol	V_{DD} = 1.0 V – STD	V_{DD} = 1.0 V – 1	V_{DD} = 1.05 V – STD	V_{DD} = 1.05 V – 1	Unit	Condition
Operating frequency	F_{MAX}	400	415	450	480	MHz	Write-port
Read access time	Tac		2		2	ns	Read-port

The following table lists the maximum operating frequency (F_{MAX}) of the µPROM block in the industrial temperature range (–40 °C to 100 °C).

Table 49 • µPROM Performance

Parameter	Symbol	V_{DD} = 1.0 V – STD	V_{DD} = 1.0 V – 1	V_{DD} = 1.05 V – STD	V_{DD} = 1.05 V – 1	Unit
Read access time	Tac	10	10	10	10	ns

7.4 Transceiver Switching Characteristics

This section describes transceiver switching characteristics.

7.4.1 Transceiver Performance

The following table describes transceiver performance.

Table 50 • PolarFire Transceiver and TXPLL Performance

Parameter	Symbol	STD Min	STD Typ	STD Max	–1 Min	–1 Typ	–1 Max	Unit
Tx data rate[1,2]	F_{TXRate}	0.25		10.3125	0.25		12.7	Gbps
Tx OOB (serializer bypass) data rate	$F_{TXRateOOB}$	DC		1.5	DC		1.5	Gbps
Rx data rate when AC coupled[2]	$F_{RxRateAC}$	0.25		10.3125	0.25		12.7	Gbps
Rx data rate when DC coupled	$F_{RxRateDC}$	0.25		3.2	0.25		3.2	Gbps
Rx OOB (deserializer bypass) data rate	$F_{TXRateOOB}$	DC		1.25	DC		1.25	Gbps
TXPLL output frequency[3]	F_{TXPLL}	1.6		5.1563	1.6		6.35	GHz
Rx CDR mode	F_{RXCDR}	0.25		10.3125	0.25		10.3125	Gbps
Rx DFE and CDR auto-calibration modes[2]	$F_{RXAUTOCAL}$	3.0		10.3125	3.0		12.7	Gbps
Rx Eye Monitor mode [2]	$F_{RXEyeMon}$	3.0		10.3125	3.0		12.7	Gbps
PCS reset minimum pulse width	MPW_{PCS_RESET}	16			16			[Tx|Rx]_CLK Cycles[4]
PMA reset minimum pulse width	MPW_{PMA_RESET}	16			16			[Tx|Rx]_CLK Cycles[4]

1. The reference clock is required to be a minimum of 75 MHz for data rates of 10 Gbps and above.
2. F or data rates greater than 10.3125 Gbps, VDDA must be set to 1.05 V mode. See supply tolerance in the section Recommended Operating Conditions (see page 7).
3. The Tx PLL rate is between 0.5x to 5.5x the Tx data rate. The Tx data rate depends on per XCVR lane Tx post-divider settings.
4. Minimum pulse width should reference TX_CLK when Tx only or both Tx and Rx are used. Reference RX_CLK if only Rx is used.

7.4.2 Transceiver Reference Clock Performance

The following table describes performance of the transceiver reference clock.

Table 51 • PolarFire Transceiver Reference Clock AC Requirements

Parameter	Symbol	STD Min	STD Typ	STD Max	–1 Min	–1 Typ	–1 Max	Unit
Reference clock input rate[1, 2]	$F_{TXREFCLK}$	20		400	20		400	MHz
Reference clock input rate[1, 2, 3]	$F_{XCVRREFCLKMAX\ CASCADE}$	20		156	20		156	MHz
Reference clock rate at the Tx PLL PFD[4]	$F_{TXREFCLKPFD}$	20		156	20		175	MHz
Reference clock rate recommended at the PFD for Tx rates 10 Gbps and above[4]	$F_{TXREFCLKPFD10G}$	75		156	75		175	MHz
Tx reference clock phase noise requirements to meet jitter specifications (156 MHz clock at reference clock input)[5]	$F_{TXREFPN}$			–110			–110	dBc /Hz
Phase noise at 10 KHz	$F_{TXREFPN}$			–110			–110	dBc /Hz
Phase noise at 100 KHz	$F_{TXREFPN}$			–115			–115	dBc /Hz
Phase noise at 1 MHz	$F_{TXREFPN}$			–135			–135	dBc /Hz
Reference clock input rise time (10%–90%)	$T_{REFRISE}$		200	500		200	500	ps
Reference clock input fall time (90%–10%)	$T_{REFFALL}$		200	500		200	500	ps
Reference clock rate at RX CDR	$F_{RXREFCLKCDR}$	20		156	20		156	MHz
Reference clock duty cycle	$T_{REFDUTY}$	40		60	40		60	%
Spread spectrum modulation spread[6]	Mod_Spread	0.1		3.1	0.1		3.1	%
Spread spectrum modulation frequency[7]	Mod_Freq	TxREF CLKPFD/ (128)	32	TxREF CLKPFD/ (128*63)	TxREF CLKPFD/ (128)	32	TxREF CLKPFD/ (128*63)	KHz

1. See the maximum reference clock rate allowed per input buffer standard.
2. The minimum value applies to this clock when used as an XCVR reference clock. It does not apply when used as a non-XCVR input buffer (DC input allowed).
3. Cascaded reference clock.
4. After reference clock input divider.

5. Required maximum phase noise is scaled based on actual $F_{TxRefClkPFD}$ value by 20 × log10 (TxRefClkPFD /156 MHz). It is assumed that the reference clock divider of 4 is used for these calculations to always meet the maximum PFD frequency specification.
6. Programmable capability for depth of down-spread or center-spread modulation.
7. Programmable modulation rate based on the modulation divider setting (1 to 63).

7.4.3 Transceiver Reference Clock I/O Standards

The following differential I/O standards are supported as transceiver reference clocks.

- LVDS25/33
- HCLS25 (for PCIe)
- RSDS25/33
- MINILVDS25/33
- SUBLVDS25/33
- PPDS25/33
- SLVS25/33
- BUSLVDS25
- MLVDS25
- LVPECL33
- MIPI25

For DC input levels, see table Differential DC Input and Output Levels.

Note: The transceiver reference clock differential receiver supports V_{ICM} common mode.

Note: The amount of jitter from the input receiver increases at common modes of less 0.2 V or greater than VDDSREF–0.4 V. Therefore, for improved SerDes operation, it is recommended that the V_{CM} of the signal into the SerDes reference clock input be at a minimum of 0.2 V and below VDDSREF–0.4 V.

The following single-ended I/O standards are supported as transceiver reference clocks.

- LVTTL
- LVCMOS33
- LVCMOS25
- LVCMOS18
- SSTL25I/II
- SSTL18I/II
- HSUL18I/II

For DC input levels, see table DC Input and Output Levels.

Note: Generally, Hysteresis = Off is recommended. In extremely high noise systems with degraded reference clock input, Hysteresis = On may improve results.

7.4.4 Transmitter Performance

The following tables describe performance of the transmitter.

Table 52 • Transceiver Reference Clock Input Termination

Parameter	Symbol	Min	Typ	Max	Unit
Single-ended termination	RefTerm		50		Ω
Single-ended termination	RefTerm		75		Ω
Single-ended termination	RefTerm		150		Ω
Differential termination	RefDiffTerm		115[1]		Ω
Power-up termination			>50K		Ω

1. Measured at VCM= 1.2 V and VID= 350 mV.

Note: All pull-ups are disabled at power-up to allow hot plug capability.

The following tables describe the PolarFire Transceiver User Interface Clocks

Note: Until specified, all modes are non-deterministic. For more information, see UG0677: PolarFire FPGA Transceiver User Guide.

Table 53 • Transceiver TX_CLK Range (Nondeterministic PCS Mode with Global or Regional Fabric Clocks)

Mode	STD Min	STD Max	–1 Min	–1 Max	Unit
8-bit, max data rate = 1.6 Gbps		200		200	MHz
10-bit, max data rate = 1.6 Gbps		160		160	MHz
16-bit, max data rate = 4.8 Gbps		300		300	MHz
20-bit, max data rate = 6.0 Gbps		300		300	MHz
32-bit, max data rate = 10.3125 Gbps (–STD) / 12.7 Gbps (–1)[1]		325		325	MHz
40-bit, max data rate = 10.3125 Gbps (–STD) / 12.7 Gbps (–1)[1]		260		320	MHz
64-bit, max data rate = 10.3125 Gbps (–STD) / 12.7 Gbps (–1)[1]		165		200	MHz
80-bit, max data rate = 10.3125 Gbps (–STD) / 12.7 Gbps (–1)[1]		130		160	MHz
Fabric pipe mode 32-bit, max data rate = 6.0 Gbps		150		150	MHz

1. For data rates greater than 10.3125 Gbps, VDDA must be set to 1.05 V mode. See supply tolerance in the section Recommended Operating Conditions (see page 7).

Table 54 • Transceiver RX_CLK Range (Non-Deterministic PCS Mode with Global or Regional Fabric Clocks)

Mode	STD Min	STD Max	–1 Min	–1 Max	Unit
8-bit, max data rate = 1.6 Gbps		200		200	MHz
10-bit, max data rate = 1.6 Gbps		160		160	MHz
16-bit, max data rate = 4.8 Gbps		300		300	MHz
20-bit, max data rate = 6.0 Gbps		300		300	MHz
32-bit, max data rate = 10.3125 Gbps		325		325	MHz
40-bit, max data rate = 10.3125 Gbps (–STD) / 12.7 Gbps (–1)[1]		260		320	MHz
64-bit, max data rate = 10.3125 Gbps (–STD) / 12.7 Gbps (–1)[1]		165		200	MHz
80-bit, max data rate = 10.3125 Gbps (–STD) / 12.7 Gbps (–1)[1]		130		160	MHz
Fabric pipe mode 32-bit, max data rate = 6.0 Gbps		150		150	MHz

1. For data rates greater than 10.3125 Gbps, VDDA must be set to 1.05 V mode. See supply tolerance in the section Recommended Operating Conditions (see page 7).

Table 55 • Transceiver TX_CLK Range (Deterministic PCS Mode with Regional Fabric Clocks)

Mode	STD Min	STD Max	–1 Min	–1 Max	Unit
8-bit, max data rate = 1.6 Gbps		200		200	MHz
10-bit, max data rate = 1.6 Gbps		160		160	MHz
16-bit, max data rate = 3.6 Gbps (–STD) / 4.25 Gbps (–1)		225		266	MHz
20-bit, max data rate = 4.5 Gbps (–STD) / 5.32 Gbps (–1)		225		266	MHz
32-bit, max data rate = 7.2 Gbps (–STD) / 8.5 Gbps (–1)		225		266	MHz
40-bit, max data rate = 9.0 Gbps (–STD) / 10.6 Gbps (–1)[1]		225		266	Mhz
64-bit, max data rate = 10.3125 Gbps (–STD) / 12.7 Gbps (–1)[1]		165		200	MHz
80-bit, max data rate = 10.3125 Gbps (–STD) / 12.7 Gbps (–1)[1]		130		160	MHz

1. For data rates greater than 10.3125 Gbps, VDDA must be set to 1.05 V mode. See supply tolerance in the section Recommended Operating Conditions (see page 7).

Table 56 • Transceiver RX_CLK Range (Deterministic PCS Mode with Regional Fabric Clocks)

Mode	STD Min	STD Max	–1 Min	–1 Max	Unit
8-bit, max data rate = 1.6 Gbps		200		200	MHz
10-bit, max data rate = 1.6 Gbps		160		160	MHz
16-bit, max data rate = 3.6 Gbps (–STD) / 4.25 Gbps (–1)		225		266	MHz
20-bit, max data rate = 4.5 Gbps (–STD) / 5.32 Gbps (–1)		225		266	MHz
32-bit, max data rate = 7.2 Gbps (–STD) / 8.5 Gbps (–1)		225		266	MHz
40-bit, max data rate = 9.0 Gbps (–STD) / 10.6 Gbps (–1)[1]		225		266	MHz
64-bit, max data rate = 10.3125 Gbps (–STD) / 12.7 Gbps (–1)[1]		165		200	MHz
80-bit, max data rate = 10.3125 Gbps (–STD) / 12.7 Gbps (–1)[1]		130		160	MHz

1. For data rates greater than 10.3125 Gbps, VDDA must be set to 1.05 V mode. See supply tolerance in the section Recommended Operating Conditions (see page 7).

Table 57 • PolarFire Transceiver Transmitter Characteristics

Parameter	Symbol	Min	Typ	Max	Unit	Condition
Differential termination	V_{OTERM}		85		Ω	
	V_{OTERM}		100		Ω	
	V_{OTERM}		150		Ω	
Common mode voltage[1]	V_{OCM}	0.44 × V_{DDA}	0.525 × V_{DDA}	0.59 × V_{DDA}	V	DC coupled 50% setting
	V_{OCM}	0.52 × V_{DDA}	0.6 × V_{DDA}	0.66 × V_{DDA}	V	DC coupled 60% setting
	V_{OCM}	0.61 × V_{DDA}	0.7 × V_{DDA}	0.75 × V_{DDA}	V	DC coupled 70% setting
	V_{OCM}	0.63 × V_{DDA}	0.8 × V_{DDA}	0.83 × V_{DDA}	V	DC coupled 80% setting
Rise time[2] Fall time[2]	T_{TxRF}	40		61	ps	20% to 80%
		39		58	ps	80% to 20%
Differential peak-to-peak amplitude	V_{ODPP}	1080	1140	1320	mV	1000 mV setting
	V_{ODPP}	1010	1060	1220	mV	800 mV setting
	V_{ODPP}	550	580	670	mV	500 mV setting
	V_{ODPP}	465	490	560	mV	400 mV setting
	V_{ODPP}	350	370	425	mV	300 mV setting
	V_{ODPP}	250	260	300	mV	200 mV setting
	V_{ODPP}	150	160	185	mV	100 mV setting
Transmit lane P to N skew[3]	T_{OSKEW}		8	15	ps	
Lane to lane transmit skew[4]	T_{LLSKEW}			75	ps	Single PLL, 2–4 bonded lanes, 8–40-bit fabric width[10]
				8	UI	Single PLL, 2–4 bonded lanes, 64–80-bit fabric width[11]
				8 + Refclk skew	UI	Multiple PLL, 2–4 bonded lanes, 8–40-bit fabric width[11, 12]
				32 + Refclk skew	UI	Multiple PLL, 2–4 bonded lanes, 64–80-bit fabric width[11, 12]
Electrical idle transition entry time[7]	TTxEITrEntry			20	ns	
Electrical idle transition exit time[7]	TTxEITrExit			19	ns	
Electrical idle amplitude	VTxEIpp			7	mV	
TXPLL lock time	T_{TXLock}			1600	PFD cycles	
Digital PLL lock time[8]	$T_{DPLLLock}$			75,000	REFCLK UIs	Frequency lock
				150,000	REFCLK UIs	Phase lock

Parameter	Symbol	Min	Typ	Max	Unit	Condition
Total jitter[5, 6, 13] Deterministic jitter[5, 6]	T_J T_{DJ}			0.22 0.1	UI UI	Data rate ≥10.3125 Gbps to 12.7 Gbps[9] (Tx V_{CO} rate 5.16 GHz to 6.35 GHz) TXPLL in integer mode
Total jitter[5, 6, 13] Deterministic jitter[5, 6]	T_J T_{DJ}			0.28 0.1	UI UI	Data rate ≥10.3125 to 12.7 Gbps[9] (Tx V_{CO} rate 5.16 GHz to 6.35 GHz) TXPLL in fractional mode
Total jitter[5, 6, 13] Deterministic jitter[5, 6]	T_J T_{DJ}			0.22 0.09	UI UI	Data rate ≥8.5 Gbps to 10.3125 Gbps (Tx V_{CO} rate 4.25 GHz to 5.16 GHz) TXPLL in integer mode
Total jitter[5, 6, 13] Deterministic jitter[5, 6]	T_J T_{DJ}			0.28 0.09	UI UI	Data rate ≥8.5 Gbps to 10.3125 Gbps (Tx V_{CO} rate 4.25 GHz to 5.16 GHz) TXPLL in fractional mode
Total jitter[5, 6, 13] Deterministic jitter[5,6]	T_J T_{DJ}			0.21 0.09	UI UI	Data rate ≥5.0 Gbps to 8.5 Gbps (Tx V_{CO} rate 2.5 GHz to 4.25 GHz) TXPLL in integer mode
Total jitter[5, 6, 13] Deterministic jitter[5, 6]	T_J T_{DJ}			0.25 0.09	UI UI	Data rate ≥5.0 Gbps to 8.5 Gbps (Tx V_{CO} rate 2.5 GHz to 4.25 GHz) TXPLL in fractional mode
Total jitter[5, 6, 13] Deterministic jitter[5, 6]	T_J T_{DJ}			0.17 0.03	UI UI	Data rate ≥1.6 Gbps to 5.0 Gbps (Tx V_{CO} rate 1.6 GHz to 2.5 GHz) TXPLL in integer mode
Total jitter[5, 6, 13] Deterministic jitter[5, 6]	T_J T_{DJ}			0.2 0.03	UI UI	Data rate ≥1.6 Gbps to 5.0 Gbps (Tx V_{CO} rate 1.6 GHz to 2.5 GHz) TXPLL in fractional mode
Total jitter[5, 6, 13] Deterministic jitter[5, 6]	T_J T_{DJ}			0.08 0.02	UI UI	Data rate ≥ 800 Mbps to 1.6 Gbps (Tx V_{CO} rate 1.6 GHz) TXPLL in integer mode

Parameter	Symbol	Min	Typ	Max	Unit	Condition
Total jitter[5, 6, 13] Deterministic jitter[5, 6]	T_J T_{DJ}			0.11 0.02	UI UI	Data rate ≥ 800 Mbps to 1.6 Gbps (Tx V_{CO} rate 1.6 GHz) TXPLL in fractional mode
Total jitter[5, 6, 13] Deterministic jitter[5, 6]	T_J T_{DJ}			0.05 0.01	UI UI	Data rate = 250 Mbps to 800 Mbps (Tx V_{CO} rate 1.48 GHz to 1.6 GHz) TXPLL in integer mode
Total jitter[5, 6, 13] Deterministic jitter[5, 6]	T_J T_{DJ}			0.06 0.01	UI UI	Data rate = 250 Mbps to 800 Mbps (Tx V_{CO} rate 1.48 GHz to 1.6 GHz) TXPLL in fractional mode

1. Increased DC common mode settings above 50% reduce allowed V_{OD} output swing capabilities.
2. Adjustable through transmit emphasis.
3. With estimated package differences.
4. Single PLL applies to all four lanes in the same quad location with the same T xPLL. Multiple PLL applies to N lanes using multiple TxPLLs from different quad locations.
5. Improved jitter characteristics for a specific industry standard are possible in many cases due to improved reference clock or higher V_{CO} rate used.
6. Tx jitter is specified with all transmitters on the device enabled, a 10–12-bit error rate (BER) and Tx data pattern of PRBS7.
7. From the PMA mode, the TX_ELEC_IDLE port to the XVCR TXP/N pins.
8. FTxRefClk = 75 MHz with typical settings.
9. For data rates greater than 10.3125 Gbps, VDDA must be set to 1.05 V mode. See supply tolerance in the section Recommended Operating Conditions (see page 7).
10. Transmit alignment in this case will automatically align upon the TX PLL obtaining lock. For details on transmit alignment, see UG0677: PolarFire FPGA Transceiver User Guide.
11. In order to obtain the required alignment for these configurations, an FPGA fabric TX alignment circuit must be implemented. For details on transmit alignment, see UG0677: PolarFire FPGA Transceiver User Guide.
12. Re fclk skew is the amount of skew between the reference clocks of the two PLL.
13. Jitter decomposition can be found in the protocol characterization reports.

7.4.5 Receiver Performance

The following table describes performance of the receiver.

Table 58 • PolarFire Transceiver Receiver Characteristics

Parameter	Symbol	Min	Typ	Max	Unit	Condition
Input voltage range	V_{IN}	0		V_{DDA} + 0.3	V	
Differential peak-to-peak amplitude	V_{IDPP}	140		1250	mV	
Differential termination	V_{ITERM}		85		Ω	
			100		Ω	
			150		Ω	
Common mode voltage	V_{ICMDC}[1]	0.7 × V_{DDA}		0.9 × V_{DDA}	V	DC coupled
Exit electrical idle detection time	T_{EIDET}		50	100	ns	
Run length of consecutive identical digits (CID)	C_{ID}			200	UI	
CDR PPM tolerance[2]	C_{DRPPM}			1.17	%UI	
CDR lock-to-data time[13]	T_{LTD}	512 * CDR_{REFDIV}		1024 * CDR_{REFDIV}	CDR_{REFCLK} cycles	Disabled: Enhanced Receiver Management 14
		(1900/T_{CDRREF} + (512 + (1020 * ($W_{XCVRFABRX}$/ CDR_{FBDIV})) * CDR_{REFDIV})		(5200/T_{CDRREF} + (1024 + (6380 * ($W_{XCVRFABRX}$/ CDR_{FBDIV})) * CDR_{REFDIV})		Enabled: Enhanced Receiver Management 14
CDR lock-to-ref time[13]	T_{LTF}	(1000/T_{CDRREF}) + (1024 * CDR_{REFDIV})		(13000/T_{CDRREF}) + (1536 * CDR_{REFDIV})	CDR_{REFCLK} cycles	
High-gain lock time	T_{HGLT}	10.8			ns	For Burst mode receiver (BMR)
High-gain state time[12]	$T_{HGSTATE}$			3264	ns	For Burst mode receiver (BMR)
Loss-of-signal detect (peak detect range setting= high)[9,10]	$V_{DETHIGH}$	145		295	mV	Setting= 3
		155		340	mV	Setting= 4
		180		365	mV	Setting= 5
		195		375	mV	Setting= 6
		210		385	mV	Setting= 7

Parameter	Symbol	Min	Typ	Max	Unit	Condition
Loss-of-signal detect (peak detect range setting=low)[9,10]	V_{DETLOW}	65		175	mV	Setting= PCIe[3, 7]
		95		190	mV	Setting= SATA[4, 8]
		75		170	mV	Setting= 1
		95		185	mV	Setting= 2
		100		190	mV	Setting= 3
		140		210	mV	Setting= 4
		155		240	mV	Setting= 5
		165		245	mV	Setting= 6
		170		250	mV	Setting= 7
Sinusoidal jitter tolerance	T_{SJTOL}	0.34			UI	>8.5 Gbps –12.7 Gbps[5, 11]
		0.43			UI	>8.0–8.5 Gbps[5]
		0.45			UI	>3.2–8.0 Gbps[5]
		0.45			UI	>1.6 to 3.2 Gbps[5]
		0.42			UI	>0.8 to 1.6 Gbps[5]
		0.41			UI	250 to 800 Mbps[5]
Total jitter tolerance with stressed eye	$T_{TJTOLSE}$	0.65			UI	3.125 Gbps[5]
		0.65			UI	6.25 Gbps[6]
		0.7			UI	10.3125 Gbps[6]
		0.7			UI	12.7 Gbps[6, 11]
Sinusoidal jitter tolerance with stressed eye	$T_{SJTOLSE}$	0.1			UI	3.125 Gbps[5]
		0.05			UI	6.25 Gbps[6]
		0.05			UI	10.3125 Gbps[6]
		0.05			UI	12.7 Gbps[6, 11]
CTLE DC gain (all stages, max settings)		0.1		10	dB	
CTLE AC gain (all stages, max settings)		0.05		16	dB	
DFE AC gain (per 5 stages, max settings)		0.05		7.5	dB	
Auto adaptive calibration time (CTLE)	T_{CTLE}	12		45	ms	
Auto adaptive calibration time (CTLE+DFE)	$T_{CTLE+DFE}$		1.4		s	

Parameter	Symbol	Min	Typ	Max	Unit	Condition
Enhanced receiver mangement control clock input (CTRL_CLK)	$F_{ERMCTRLCLK}$	38.4	40	41.6	MHz	

1. Valid at 3.2 Gbps and below.
2. Data vs Rx reference clock frequency.
3. Achieves compliance with PCIe electrical idle detection.
4. Achieves compliance with SATA OOB specification.
5. Rx jitter values based on bit error ratio (BER) of 10–12, AC-coupled input with 400 mV V_{ID}, all stages of Rx CTLE enabled, DFE disabled, 80 MHz sinusoidal jitter injected to Rx data.
6. Rx jitter values based on bit error ratio (BER) of 10–12, AC-coupled input with 400 mV V_{ID}, all stages of Rx CTLE enabled, DFE enabled, 80 MHz sinusoidal jitter injected to Rx data.
7. For PCIe: Low Threshold Setting= 0, High Threshold Setting= 2.
8. For SATA: Low Threshold Setting= 2, High Threshold Setting= 3.
9. Loss of signal is valid for data rates of 1 Gbps to 5 Gbps for PRBS7 (8B/10B) or PRBS31 (64b/6xb) data formats. It is also valid for detection of SATA out-of-band signals at data rates up to 6 Gbps. If the default settings for the low threshold (0x0) and high threshold (0x2) using the low range option for the peak detector are used, then the Rx $V_{Amplitude}$ pk-pk (outside of data eye) at the receiver input package pins must be a minimum of 300 mV for short reach (6.5 dB insertion loss at 5 GHz) applications, 350 mV for medium reach (17.0 dB insertion loss at 5 GHz) applications, and 450 mV for long reach (25.0 dB insertion loss at 5 GHz) applications—generally the settings are less limiting than what is required for good BER operation of the SerDes. Note that if the option to force CDR Lock2Ref upon Rx Idle is set (default at data rates of 5 Gbps and below), this minimum $V_{Amplitude}$ pk-pk must be enforced for proper CDR operation.
10. Detect values measured at 1.5 Gbps with PRBS7 data pattern.
11. For data rates greater than 10.3125 Gbps, VDDA must be set to 1.05 V mode. See supply tolerance in the section Recommended Operating Conditions (see page 7).
12. $T_{HGSTATE}$ is based on the condition where the CDR was in lock (to reference or data) for at least 5.2 µs before moving to the high-gain state. At this point, if the receive data is outside the ppm tolerance of the CDR, the CDR will unlock after the time specified by the parameter.
13. The following definitions apply:
    a. T_{CDRREF} is the transceiver CDR reference clock period in nanoseconds.
    b. $W_{XCVRFABRX}$ is the parallel interface width of the transceiver receive fabric interface.
    c. CDR_{FBDIV} is the feedback divider of the transceiver.
    d. $CDR_{CDRREFDIV}$ is the reference divider of the transceiver CDR.
14. For details on the Enhanced Receiver Management feature, refer to UG0677: PolarFire FPGA Transceiver User Guide.

7.4.6 Transceiver and Receiver Return Loss Characteristics

This section describes transmitter and receiver return loss characteristics compliant with OIF-CEI-03.1.

Figure 4 • Differential Return Loss

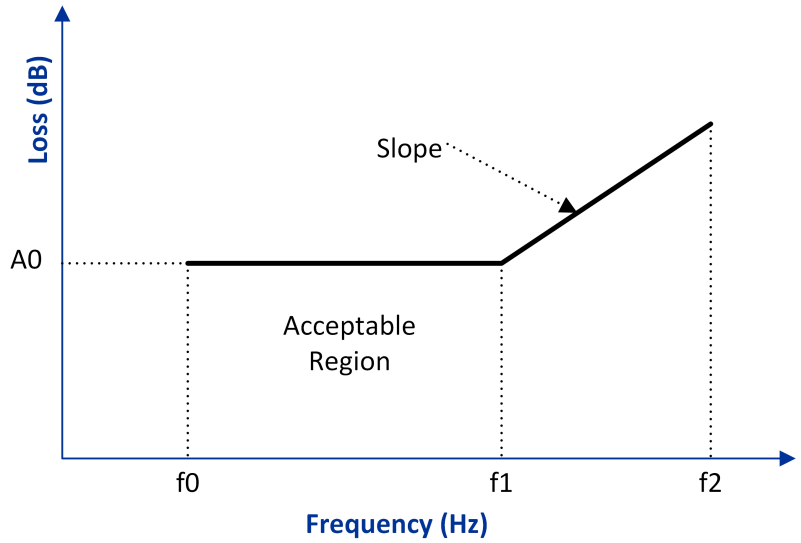

Table 59 • Differential Return Loss

Parameter	Value	Unit
A0	–8	dB
f0	100	MHz
f1	(3/4) * T_Baud	Hz
f2	T_Baud	Hz
Slope	16.6	dB/dec

Figure 5 • Common Mode Return Loss

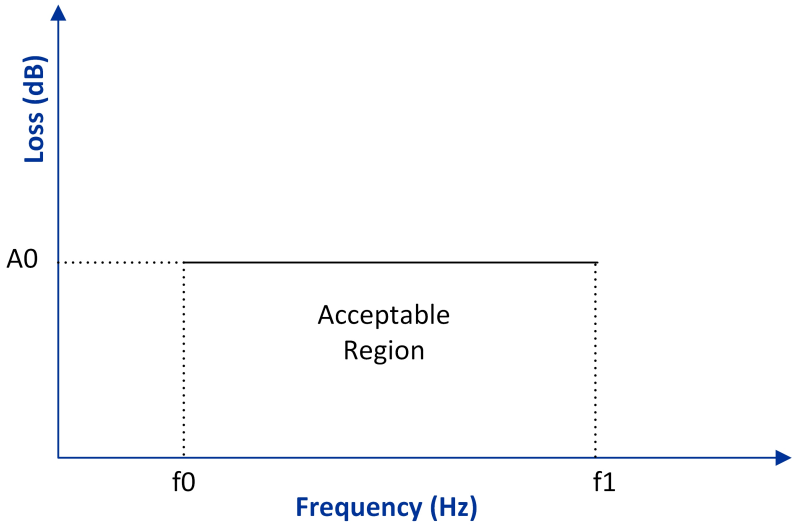

Table 60 • Common Mode Return Loss

Parameter	Value	Unit
A0	–6	dB
f0	100	MHz
f1	(3/4) * T_Baud	Hz

7.5 Transceiver Protocol Characteristics

The following section describes transceiver protocol characteristics.

7.5.1 PCI Express

The following tables describe the PCI express.

Table 61 • PCI Express Gen1

Parameter	Data Rate	Min	Max	Unit
Total transmit jitter	2.5 Gbps		0.25	UI
Receiver jitter tolerance	2.5 Gbps	0.4		UI

Note: With add-in card, as specified in PCI Express CEM Rev 2.0.

Table 62 • PCI Express Gen2

Parameter	Data Rate	Min	Max	Unit
Total transmit jitter	5.0 Gbps		0.35	UI
Receiver jitter tolerance	5.0 Gbps	0.4		UI

Note: With add-in card as specified in PCI Express CEM Rev 2.0.

7.5.2 Interlaken

The following table describes Interlaken.

Table 63 • Interlaken

Parameter	Data Rate	Min	Max	Unit
Total transmit jitter	6.375 Gbps		0.3	UI
	10.3125 Gbps		0.3	UI
	12.7 Gbps[1]		0.3	UI
Receiver jitter tolerance	6.375 Gbps	0.6		UI
	10.3125 Gbps	0.65		UI
	12.7 Gbps[1]	0.65		UI

1. For data rates greater than 10.3125 Gbps, VDDA must be set to 1.05 V mode. See supply tolerance in the section Recommended Operating Conditions (see page 7).

7.5.3 10GbE (10GBASE-R and 10GBASE-KR)

The following table describes 10GbE (10GBASE-R).

Table 64 • 10GbE (10GBASE-R)

Parameter	Data Rate	Min	Max	Unit
Total transmit jitter	10.3125 Gbps		0.28	UI
Receiver jitter tolerance	10.3125 Gbps	0.7		UI

The following table describes 10GbE (10GBASE-KR).

Table 65 • 10GbE (10GBASE-KR)

Parameter	Data Rate	Min	Max	Unit
Total transmit jitter	10.3125 Gbps		0.28	UI
Receiver jitter tolerance (SJ)	10.3125 Gbps	0.115		UI
Receiver jitter tolerance (RJ)	10.3125 Gbps	0.13		UI
Receiver jitter tolerance (DCD)	10.3125 Gbps	0.035		UI

The following table describes 10GbE (XAUI).

Table 66 • 10GbE (XAUI)

Parameter	Data Rate	Min	Max	Unit
Total transmit jitter (near end)	3.125 Gbps		0.35	UI
Total transmit jitter (far end)			0.55	UI
Receiver jitter tolerance	3.125 Gbps	0.65		UI

The following table describes 10GbE (RXAUI).

Table 67 • 10GbE (RXAUI)

Parameter	Data Rate	Min	Max	Unit
Total transmit jitter (near-end)	6.25 Gbps		0.35	UI
Total transmit jitter (far-end)	6.25 Gbps		0.55	UI
Receiver jitter tolerance	6.25 Gbps	0.65		UI

7.5.4 1GbE (1000BASE-X)

The following table describes 1GbE (1000BASE-X).

Table 68 • 1GbE (1000BASE-X)

Parameter	Data Rate	Min	Max	Unit
Total transmit jitter	1.25 Gbps		0.24	UI
Receiver jitter tolerance	1.25 Gbps	0.749		UI

7.5.5 SGMII and QSGMII

The following table describes SGMII.

Table 69 • SGMII

Parameter	Data Rate	Min	Max	Unit
Total transmit jitter	1.25 Gbps		0.24	UI
Receiver jitter tolerance	1.25 Gbps	0.749		UI

The following table describes QSGMII.

Table 70 • QSGMII

Parameter	Data Rate	Min	Max	Unit
Total transmit jitter	5.0 Gbps		0.3	UI
Receiver jitter tolerance	5.0 Gbps	0.65		UI

7.5.6 CPRI

The following table describes CPRI.

Table 71 • CPRI

Parameter	Data Rate	Min	Max	Unit
Total transmit jitter	0.6144 Gbps		0.35	UI
	1.2288 Gbps		0.35	UI
	2.4576 Gbps		0.35	UI
	3.0720 Gbps		0.35	UI
	4.9152 Gbps		0.3	UI
	6.1440 Gbps		0.3	UI
	8.11008 Gbps		0.335	UI
	9.8304 Gbps		0.335	UI
Receive jitter tolerance	0.6144 Gbps	0.75		UI
	1.2288 Gbps	0.75		UI
	2.4576 Gbps	0.75		UI
	3.0720 Gbps	0.75		UI
	4.9152 Gbps	0.7		UI
	6.1440 Gbps	0.7		UI
	8.11008 Gbps	0.7		UI
	9.8304 Gbps	0.7		UI

7.5.7 JESD204B

The following table describes JESD204B.

Table 72 • JESD204B

Parameter	Data Rate	Min	Max	Unit
Total transmit jitter	3.125 Gbps		0.35	UI
	6.25 Gbps		0.3	UI
	12.5 Gbps[1]		0.3	UI
Receive jitter tolerance	3.125 Gbps	0.56		UI
	6.25 Gbps	0.6		UI
	12.5 Gbps[1]	0.7		UI

1. For data rates greater than 10.3125 Gbps, VDDA must be set to 1.05 V mode. See supply tolerance in the section Recommended Operating Conditions (see page 7).

7.5.8 Display Port

The following table describes Display Port.

Table 73 • Display Port

Parameter	Data Rate	Condition	Min	Max	Unit
Total transmit jitter	1.62 Gbps	Test point: TP2		0.27	UI
	2.7 Gbps	Test point: TP2		0.42	UI
	5.4 Gbps	Test point: TP3_EQ		0.62	UI
Receive jitter tolerance	1.62 Gbps	SJ at 20 MHz	0.747		UI
	2.7 Gbps	SJ at 100 MHz	0.491		UI
	5.4 Gbps	SJ at 10 MHz	0.636		UI

7.5.9 Serial RapidIO

The following table describes Serial RapidIO.

Table 74 • Serial RapidIO

Parameter	Data Rate	Condition	Min	Max	Unit
Total transmit jitter	1.25 Gbps			0.35	UI
	2.5 Gbps			0.35	UI
	3.125 Gbps			0.35	UI
	5.0 Gbps			0.3	UI
	6.25 Gbps			0.3	UI
	10.3125 Gbps			0.28	UI
Receive jitter tolerance	1.25 Gbps		0.65		UI
	2.5 Gbps		0.65		UI
	3.125 Gbps		0.65		UI
	5.0 Gbps	Short reach	0.6		UI
		Long reach	0.95		UI
	6.25 Gbps	Short reach	0.6		UI
		Long reach	0.95		UI
	10.3125 Gbps	Short reach	0.62		UI

7.5.10 SDI

The following table describes SDI.

Table 75 • SDI

Parameter	Data Rate	Condition	Min	Max	Unit
Total transmit jitter	270 Mbps	Timing jitter (10 Hz–27 MHz)			UI
		Alignment jitter (1 KHz–27 MHz)			UI
	1.485 Gbps	Timing jitter (10 Hz–148.5 MHz)		1.0	UI
		Alignment jitter (100 KHz–148.5 MHz)		0.2	UI
	2.97 Gbps	Timing jitter (10 Hz–297 MHz)		2.0	UI
		Alignment jitter (100 KHz–297 MHz)		0.3	UI
Receive jitter tolerance	270 Mbps	Alignment jitter			UI
	1.485 Gbps	Alignment jitter	0.2		UI
	2.97 Gbps	Alignment jitter	0.3		UI

7.5.11 OTN

The following table describes OTN.

Table 76 • OTN

Parameter	Data Rate	Condition	Min	Max	Unit
Total transmit jitter	2.66 Gbps	3 dB BW: 5 KHz to 20 MHz		0.3	UI
		3 dB BW: 1 MHz to 20 MHz		0.1	UI
	10.70 Gbps	3 dB BW: 20 KHz to 80 MHz		0.3	UI
		3 dB BW: 4 MHz to 80 MHz		0.1	UI
	11.09 Gbps[1]	3 dB BW: 20 KHz to 80 MHz		0.3	UI
		3 dB BW: 4 MHz to 80 MHz		0.1	UI
Receive jitter tolerance	2.66 Mbps	SJ at 5 KHz	1.5		UI
		SJ at 20 MHz	0.15		UI
	10.70 Gbps	SJ at 20 KHz	1.5		UI
		SJ at 80 MHz	0.15		UI
	11.09 Gbps[1]	SJ at 20 KHz	1.5		UI
		SJ at 80 MHz	0.15		UI

1. For data rates greater than 10.3125 Gbps, VDDA must be set to 1.05 V mode. See supply tolerance in the section Recommended Operating Conditions (see page 7).

7.5.12 Fiber Channel

The following table describes Fiber Channel.

Table 77 • Fiber Channel

Parameter	Data Rate	Condition	Min	Max	Unit
Total transmit jitter	1.0625 Gbps			0.23	UI
	2.125 Gbps			0.33	UI
	4.25 Gbps			0.52	UI
	8.5 Gbps			0.31	UI
Receive jitter tolerance	1.0625 Gbps	0.68			UI
	2.125 Gbps	0.62			UI
	4.24 Gbps	0.62			UI
	8.5 Gbps	0.71			UI

7.5.13 HiGig and HiGig+

The following table describes HiGig and HiGig+.

Table 78 • HiGig and HiGig+

Parameter	Data Rate	Condition	Min	Max	Unit
Total transmit jitter	3.75 Gbps	Near-end		0.35	UI
	3.75 Gbps	Far-end		0.55	UI
Receive jitter tolerance	3.75 Gbps		0.65		UI

7.5.14 HiGig II

The following table describes HiGig II.

Table 79 • HiGig II

Parameter	Data Rate	Condition	Min	Max	Unit
Total transmit jitter	6.875 Gbps	Near-end		0.35	UI
	6.875 Gbps	Far-end		0.55	UI
Receive jitter tolerance	6.875 Gbps		0.65		UI

7.6 Non-Volatile Characteristics

The following section describes non-volatile characteristics.

7.6.1 FPGA Programming Cycle and Retention

The following table describes FPGA programming cycle and retention.

Table 80 • FPGA Programming Cycles vs Retention Characteristics

Programming T_J	Programming Cycles, Max	Retention Years	Retention Years at T_J
0 °C to 85 °C	1000	20	85 °C
0 °C to 100 °C	500	20	100 °C
–20 °C to 100 °C	500	20	100 °C
–40 °C to 100 °C	500	20	100 °C
–40 °C to 85 °C	1000	16	100 °C
–40 °C to 55 °C	2000	12	100 °C

Note: Power supplied to the device must be valid during programming operations such as programming and verify . Programming recovery mode is available only for in-application programming mode and requires an external SPI flash.

7.6.2 FPGA Programming Time

The following tables describe FPGA programming time.

Table 81 • Master SPI Programming Time (IAP)

Parameter	Symbol	Devices	Typ	Max	Unit
Programming time	T_{PROG}	MPF100T, TL, TS, TLS	17	25	s
		MPF200T, TL, TS, TLS	17	25	s
		MPF300T, TL, TS, TLS	26	32	s
		MPF500T, TL, TS, TLS	31	37	s

Table 82 • Slave SPI Programming Time

Parameter	Symbol	Devices	Typ	Max	Unit
Programming time	T_{PROG}	MPF100T, TL, TS, TLS[1]	27	33	s
		MPF200T, TL, TS, TLS[1]	41	50	s
		MPF300T, TL, TS, TLS[1]	50	60	s
		MPF500T, TL, TS, TLS[1]	90	108	s

1. SmartFusion2 as SPI Master with MSS running at 100 MHz, MSS_SPI_0 port running at 6.67 MHz. Bitstream stored in DDR. DirectC version 4.1.

Table 83 • JTAG Programming Time

Parameter	Symbol	Devices	Typ	Max	Unit
Programming time	T_{PROG}	MPF100T, TL, TS, TLS[1]	35	42	s
		MPF200T, TL, TS, TLS[1]	56	68	s
		MPF300T, TL, TS, TLS[1]	95	114	s
		MPF500T, TL, TS, TLS[1]	122	147	s

1. Programmer: FlashPro5 with TCK 10 MHz. PC Configuration: Intel i7 at 3.6 GHz, 32 GB RAM, Windows 10.

7.6.3 FPGA Bitstream Sizes

The following table describes FPGA bitstream sizes.

Table 84 • Initialization Client Sizes

Device	Plaintext	Ciphertext
MPF100T, TL, TS, TLS	1580 KB	1630 KB
MPF200T, TL, TS, TLS	2916 KB	3006 KB
MPF300T, TL, TS, TLS	4265 KB	4403 KB
MPF500T, TL, TS, TLS	6835 KB	7045 KB

Note: Worst case initializing all fabric LSRAM, USRAM, and UPROM.

Table 85 • Bitstream Sizes

File	Devices	FPGA	Security	SNVM (all pages)	FPGA+ SNVM	FPGA+ Sec	SNVM+ Sec	FPGA+ SNVM+ Sec
SPI	MPF100T, TL, TS, TLS	3.4 MB	3.5 KB	59.7 KB	3.5 MB	3.5 MB	62.2 KB	3.5 MB
DAT	MPF100T, TL, TS, TLS	3.4 MB	7.6 KB	61.2 KB	3.5 MB	3.4 MB	66.3 KB	3.5 MB
SPI	MPF200T, TL, TS, TLS	5.9 MB	3.5 KB	59.7 KB	5.9 MB	5.9 MB	62.2 KB	6.0 MB
DAT	MPF200T, TL, TS, TLS	5.9 MB	7.6 KB	61.2 KB	6.0 MB	5.9 MB	66.3 KB	6.0 MB
SPI	MPF300T, TL, TS, TLS	9.3 MB	3.5 KB	59.7 KB	9.6 MB	9.5 MB	62.2 KB	9.6 MB
DAT	MPF300T, TL, TS, TLS	9.3 MB	7.6 KB	61.2 KB	9.6 MB	9.5 MB	66.3 KB	9.6 MB
SPI	MPF500T, TL, TS, TLS	14.3 MB	3.5 KB	59.7 KB	14.4 MB	14.3 MB	62.2 KB	14.4 MB
DAT	MPF500T, TL, TS, TLS	14.3 MB	7.6 KB	61.2 KB	14.4 MB	14.3 MB	66.3 KB	14.4 MB

7.6.4 Digest Cycles

Digests verify the integrity of the programmed non-volatile data. Digests are a cryptographic hash of various data areas. Any digest that reports back an error raises the digest tamper flag.

Table 86 • Maximum Number of Digest Cycles

		Retention Since Programmed (N = Number Digests During that Time)[1]								
Digest T_J	Storage and Operating T_J	N ≤300	N = 500	N = 1000	N = 1500	N = 2000	N = 4000	N = 6000	Unit	Retention
–40 to 100	–40 to 100	20 × LF	17 × LF	12 × LF	10 × LF	8 × LF	4 × LF	2 × LF	°C	Years
–40 to 100	0 to 100	20 × LF	17 × LF	12 × LF	10 × LF	8 × LF	4 × LF	2 × LF	°C	Years
–40 to 85	–40 to 85	20 × LF	20 × LF	20 × LF	20 × LF	16 × LF	8 × LF	4 × LF	°C	Years
–40 to 55	–40 to 55	20 × LF	20 × LF	20 × LF	20 × LF	20 × LF	20 × LF	20 × LF	°C	Years

1. LF = Lifetime factor as defined by the number of programming cycles the device has seen under the conditions listed in the following table.

Table 87 • FPGA Programming Cycles Lifetime Factor

Programming T_J	Programming Cycles	LF
–40 °C to 100 °C	500	1
–40 °C to 85 °C	1000	0.8
–40 °C to 55 °C	2000	0.6

Notes:

- The maximum number of device digest cycles is 100K.
- Digests are operational only over the –40 °C to 100 °C temperature range.
- After a program cycle, an additional N digests cycles are allowed with the resultant retention characteristics for the total operating and storage temperature shown.
- Retention is specified for total device storage and operating temperature.
- All temperatures are junction temperatures (T_J).
- Example 1—500 digests cycles are performed between programming cycles. N = 500. The operating conditions are –40 °C to 85 °C T_J. 501 programming cycles have occurred. The retention under these operating conditions is 20 × LF = 20 × .8 = 16 years.
- Example 2—one programming cycle has occurred, N = 1500 digest cycles have occurred. Temperature range is –40 °C to 100 °C. The resultant retention is 10 × LF or 10 years over the industrial temperature range.

7.6.5 Digest Time

The following table describes digest time.

Table 88 • Digest Times

Parameter	Devices	Typ	Max	Unit
Setup time	All	2		µs
Fabric digest run time	MPF100T, TL, TS, TLS	880	910	ms
	MPF200T, TL, TS, TLS	1005	1072	ms
	MPF300T, TL, TS, TLS	1503.9	1582	ms
	MPF500T, TL, TS, TLS	2085	2150	ms
UFS CC digest run time	MPF100T, TL, TS, TLS	33.5	35	µs
	MPF200T, TL, TS, TLS	33.5	35	µs
	MPF300T, TL, TS, TLS	33.5	35	µs
	MPF500T, TL, TS, TLS	33.5	35	µs
sNVM digest run time[1]	MPF100T, TL, TS, TLS	4.5	5	ms
	MPF200T, TL, TS, TLS	4.5	5	ms
	MPF300T, TL, TS, TLS	4.5	5	ms
	MPF500T, TL, TS, TLS	4.5	5	ms
UFS UL digest run time	MPF100T, TL, TS, TLS	47	49	µs
	MPF200T, TL, TS, TLS	47	49	µs
	MPF300T, TL, TS, TLS	47	49	µs
	MPF500T, TL, TS, TLS	47	49	µs
User key digest run time[2]	MPF100T, TL, TS, TLS	526	544	µs
	MPF200T, TL, TS, TLS	526	544	µs
	MPF300T, TL, TS, TLS	526	544	µs
	MPF500T, TL, TS, TLS	526	544	µs
UFS UPERM digest run time	MPF100T, TL, TS, TLS	33.2	35	µs
	MPF200T, TL, TS, TLS	33.2	35	µs
	MPF300T, TL, TS, TLS	33.2	35	µs
	MPF500T, TL, TS, TLS	33.2	35	µs
Factory digest run time	MPF100T, TL, TS, TLS	494	511	µs
	MPF200T, TL, TS, TLS	494	511	µs
	MPF300T, TL, TS, TLS	494	511	µs
	MPF500T, TL, TS, TLS	494	511	µs

1. The entire sNVM is used as ROM.
2. Valid for user key 0 through 6.

Note: These times do not include the power-up to functional timing overhead when using digest checks on power-up.

7.6.6 Zeroization Time

This section describes zeroization time. A zeroization operation counts as one programming cycle.

Table 89 • Zeroization Times for MPF100T, TL, TS, and TLS Devices

Parameter	Typ	Max	Unit	Conditions
Time to enter zeroization	8	9	ms	Zip flag set
Time to destroy the fabric data[1]	248	253	ms	Data erased
Time to destroy data in non-volatile memory (like new)[1, 2]	507	522	ms	One iteration of scrubbing
Time to destroy data in non-volatile memory (non-recoverable)[1, 3]	520	536	ms	One iteration of scrubbing
Time to scrub the fabric data[1]	0.8	0.9	s	Full scrubbing
Time to scrub the pNVM data (like new)[1, 2]	1.5	1.6	s	Full scrubbing
Time to scrub the fabric data pNVM data (non-recoverable)[1, 3]	1.7	1.8	s	Full scrubbing
Time to verify[5]	1.1	1.2	s	
Total time to zeroize (like new)[1, 2]	2.8	2.9	s	
Total time to zeroize (non-recoverable)[1, 3]	3.1	3.2	s	

1. Total completion time after entering zeroization.
2. Like new mode—zeroizes user design security setting and sNVM content.
3. Non-recoverable mode—zeroizes user design security setting, sNVM and factory keys, and factory data required for programming.
4. Time to verify after scrubbing completes.

Table 90 • Zeroization Times for MPF200T, TL, TS, and TLS Devices

Parameter	Typ	Max	Unit	Conditions
Time to enter zeroization	8	9	ms	Zip flag set
Time to destroy the fabric data[1]	250	255	ms	Data erased
Time to destroy data in non-volatile memory (like new)[1, 2]	507	522	ms	One iteration of scrubbing
Time to destroy data in non-volatile memory (non-recoverable)[1, 3]	520	536	ms	One iteration of scrubbing
Time to scrub the fabric data[1]	0.9	1.0	s	Full scrubbing
Time to scrub the pNVM data (like new)[1, 2]	1.5	1.6	s	Full scrubbing
Time to scrub the fabric data PNVM data (non-recoverable)[1, 3]	1.7	1.8	s	Full scrubbing
Time to verify[5]	1.4	1.5	s	
Total time to zeroize (like new)[1, 2]	2.9	3.0	s	
Total time to zeroize (non-recoverable)[1, 3]	3.1	3.2	s	

1. Total completion time after interning zeroization.
2. Like new mode—zeroizes user design security setting and sNVM content.
3. Non-recoverable mode—zeroizes user design security setting, sNVM and factory keys, and factory data required for programming.
4. Time to verify after scrubbing completes.

Table 91 • Zeroization Times for MPF300T, TL, TS, and TLS Devices

Parameter	Typ	Max	Unit	Conditions
Time to enter zeroization	8	9	ms	Zip flag set
Time to destroy the fabric data[1]	390	420	ms	One iteration of scrubbing
Time to destroy data in non-volatile memory (like new)[1, 2]	507	522	ms	One iteration of scrubbing
Time to destroy data in non-volatile memory (non- recoverable)[1, 3]	520	536	ms	One iteration of scrubbing
Time to scrub the fabric data[1]	1.3	1.4	s	Full scrubbing
Time to scrub the pNVM data (like new)[1, 2]	1.5	1.6	s	Full scrubbing
Time to scrub the fabric data pNVM data (non-recoverable)[1, 3]	1.7	1.8	s	Full scrubbing
Time to verify[5]	1.8	1.9	s	
Total time to zeroize (like new)[1, 2]	3.7	3.8	s	
Total time to zeroize (non-recoverable)[1, 3]	3.9	4	s	

1. Total completion time after interning zeroization.
2. Like new mode—zeroizes user design security setting and sNVM content.
3. Non-recoverable mode—zeroizes user design security setting, sNVM and factory keys, and factory data required for programming.
4. Time to verify after scrubbing completes.

Table 92 • Zeroization Times for MPF500T, TL, TS, and TLS Devices

Parameter	Typ	Max	Unit	Conditions
Time to enter zeroization	8	9	ms	Zip flag set
Time to destroy the fabric data[1]	392	422	ms	One iteration of scrubbing
Time to destroy data in non-volatile memory (like new)[1, 2]	507	522	ms	One iteration of scrubbing
Time to destroy data in non-volatile memory (non-recoverable)[1, 3]	520	536	ms	One iteration of scrubbing
Time to scrub the fabric data[1]	1.4	1.5	s	Full scrubbing
Time to scrub the pNVM data (like new)[1, 2]	1.5	1.6	s	Full scrubbing
Time to scrub the fabric data pNVM data (non-recoverable)[1, 3]	1.7	1.8	s	Full scrubbing
Time to verify[5]	1.9	2.0	s	
Total time to zeroize (like new)[1, 2]	3.8	3.9	s	
Total time to zeroize (non-recoverable)[1, 3]	4.0	4.1	s	

1. Total completion time after entering zeroization.
2. Like new mode—zeroizes user design security setting and sNVM content.
3. Non-recoverable mode—zeroizes user design security setting, sNVM and factory keys, and factory data required for programming.
4. Time to verify after scrubbing completes.

7.6.7 Verify Time

The following tables describe verify time.

Table 93 • Standalone Fabric Verify Times

Parameter	Devices	Max	Unit
Standalone verification over JTAG	MPF100T, TL, TS, TLS[1]	33	s
	MPF200T, TL, TS, TLS[1]	53	s
	MPF300T, TL, TS, TLS[1]	90	s
	MPF500T, TL, TS, TLS[1]	114	s
Standalone verification over SPI	MPF100T, TL, TS, TLS[2]	24	s
	MPF200T, TL, TS, TLS[2]	37	s
	MPF300T, TL, TS, TLS[2]	55	s
	MPF500T, TL, TS, TLS[2]	89	s

1. Programmer: FlashPro5, TCK 10 MHz; PC configuration: Intel i7 at 3.6 GHz, 32 GB RAM, Windows 10.
2. SmartFusion2 with MSS running at 100 MHz, MSS_SPI_0 port r unning at 6.67 MHz. Bitstream stored in DDR. DirectC version 4.1.

Notes:

- Standalone verify is limited to 2,000 total device hours over the industrial –40 °C to 100 °C temperature.
- Use the digest system service, for verify device time more than 2,000 hours.
- Standalone verify checks the programming margin on both the P and N gates of the push-pull cell.
- Digest checks only the P side of the push-pull gate. However, the push-pull gates work in tandem. Digest check is recommended if users believe they will exceed the 2,000-hour verify time specification.

Table 94 • Verify Time by Programming Hardware

Devices	IAP	FlashPro4	FlashPro5	BP	Silicon Sculptor	Units
MPF100T, TL, TS, TLS	6	42	33			s
MPF200T, TL, TS, TLS	9	67	53			s
MPF300T, TL, TS, TLS	14	95	90			s
MPF500T, TL, TS, TLS	15	169	114			s

Notes:

- FlashPro4 4 MHz TCK.
- FlashPro5 10 MHz TCK.
- PC configuration: Intel i7 at 3.6 GHz, 32 GB RAM, Windows 10.

Table 95 • Verify System Services

Parameter	Symbol	ServiceID	Devices	Typ	Max	Unit
In application verify by index	$T_{IAP_Ver_Index}$	44H	MPF100T, TL, TS, TLS	5.9	6.2	s
			MPF200T, TL, TS, TLS	8.2	9	s
			MPF300T, TL, TS, TLS	12.4	13	s
			MPF500T, TL, TS, TLS	13.4	14	s
In application verify by SPI address	$T_{IAP_Ver_Addr}$	45H	MPF100T, TL, TS, TLS	5.9	6.2	s
			MPF200T, TL, TS, TLS	8.2	9	s
			MPF300T, TL, TS, TLS	12.4	13	s
			MPF500T, TL, TS, TLS	13.4	14	s

7.6.8 Authentication Time

The following tables describe authentication system service time.

Table 96 • Authentication Services

Parameter	Symbol	ServiceID	Devices	Typ	Max	Unit
Bitstream Authentication	T_{BIT_AUTH}	22H	MPF100T, TL, TS, TLS	2.1	2.4	s
			MPF200T, TL, TS, TLS	3.3	3.7	s
			MPF300T, TL, TS, TLS	4.9	5.4	s
			MPF500T, TL, TS, TLS	7.6	7.8	s
IAP Image Authentication	T_{IAP_AUTH}	23H	MPF100T, TL, TS, TLS	2.1	2.4	s
			MPF200T, TL, TS, TLS	3.3	3.7	s
			MPF300T, TL, TS, TLS	4.9	5.4	s
			MPF500T, TL, TS, TLS	7.6	7.8	s

7.6.9 Secure NVM Performance

The following table describes secure NVM performance.

Table 97 • sNVM Read/Write Characteristics

Parameter	Symbol	Min	Typ	Max	Unit	Conditions
Plain text programming		7.0	7.2	7.9	ms	
Authenticated text programming		7.2	7.4	9.4	ms	
Authenticated and encrypted text programming		7.2	7.4	9.4	ms	
Authentication R/W 1st access from power-up overhead	T_{PUF_OVHD}	10	13	111	ms	From T_{FAB_READY}
Plain text read		8	8.5	9	µs	
Authenticated text read		113	114.5	119	µs	
Authenticated and decrypted text read		159	161	167	µs	

Notes:

- Page size= 252 bytes (non-authenticated), 236 bytes (authenticated).
- Only page reads and writes allowed.
- T_{PUF_OVHD} is an additional time that occurs on the first R/W, after cold or warm boot, to sNVM using authenticated or authenticated and encrypted text.

7.6.10 Secure NVM Programming Cycles

The following table describes secure NVM programming cycles.

Table 98 • sNVM Programming Cycles vs. Retention Characteristics

Programming Temperature	Programming Cycles per Page, Max	Programming Cycles per Block, Max	Retention Years
–40 °C to 100 °C	10,000	100,000	20
–40 °C to 85 °C	10,000	100,000	20
–40 °C to 55 °C	10,000	100,000	20

Note: Page size = 128 bytes. Block size = 56 KBytes.

7.7 System Services

This section describes system switching and throughput characteristics.

7.7.1 System Services Throughput Characteristics

The following table describes system services throughput characteristics.

Table 99 • System Services Throughput Characteristics

Parameter	Symbol	Service ID	Typ	Max	Unit	Conditions
Serial number	T_{Serial}	00H	65	67	µs	
User code	T_{User}	01H	0.8	1.2	µs	
Design information	T_{Design}	02H	2.5	3	µs	
Device certificate	T_{Cert}	03H	255	271	ms	
Read digests	T_{digest_read}	04H	201	215	µs	
Query security locks	T_{sec_Query}	05H	15	17	µs	
Read debug information	T_{Rd_debug}	06H	34	38	µs	
Reserved		07H–0FH				
Secure NVM write plain text	$T_{SNVM_Wr_Plain}$	10H				Note 1
Secure NVM write authenticated plain text	$T_{SNVM_Wr_Auth}$	11H				Note 1
Secure NVM write authenticated cipher text	$T_{SNVM_Wr_Cipher}$	12H				Note 1
Reserved		13H–17H				
Secure NVM read	T_{SNVM_Rd}	18H				Note 1
Digital signature service raw	T_{SIG_RAW}	19H	174	187	ms	
Digital signature service DER	T_{SIG_DER}	1AH	174	187	ms	
Reserved		1BH–1FH				
PUF emulation	$T_{Challenge}$	20H	1.8	2.0	ms	
Nonce service	T_{Nonce}	21H	1.2	1.5	ms	
Bitstream authentication	TBIT_AUTH	22H				Note 4
IAP Image authentication	TIAP_AUTH	23H				Note 4
Reserved		26H–3FH				
In application programming by index	$T_{IAP_Prg_Index}$	42H				Note 2
In application programming by SPI address	$T_{IAP_Prg_Addr}$	43H				Note 2
In application verify by index	TIAP_Ver_Index	44H				Note 5
In application verify by SPI address	TIAP_Ver_Addr	45H				Note 5
Auto update	$T_{AutoUpdate}$	46H				Note 2
Digest check	T_{digest_chk}	47H				Note 3

1. See sNVM Read/Write Characteristics (see page 74).
2. See SPI Master Programming Time (see page 66).
3. See Digest Times (see page 69).
4. See Authentication Services Time (see page 73).
5. See Verify Services Time (see page 73).
6. Throughputs described are measured from SS_REQ assertion to BUSY de-assertion.

7.8 Fabric Macros

This section describes switching characteristics of UJTAG, UJTAG_SEC, USPI, system controller, and temper detectors and dynamic reconfiguration.

7.8.1 UJTAG Switching Characteristics

The following section describes characteristics of UJTAG switching.

Table 100 • UJTAG Performance Characteristics

Parameter	Symbol	Min	Typ	Max	Unit	Condition
TCK frequency	F_{TCK}			25	MHz	

Figure 6 • UJTAG Timing Diagram

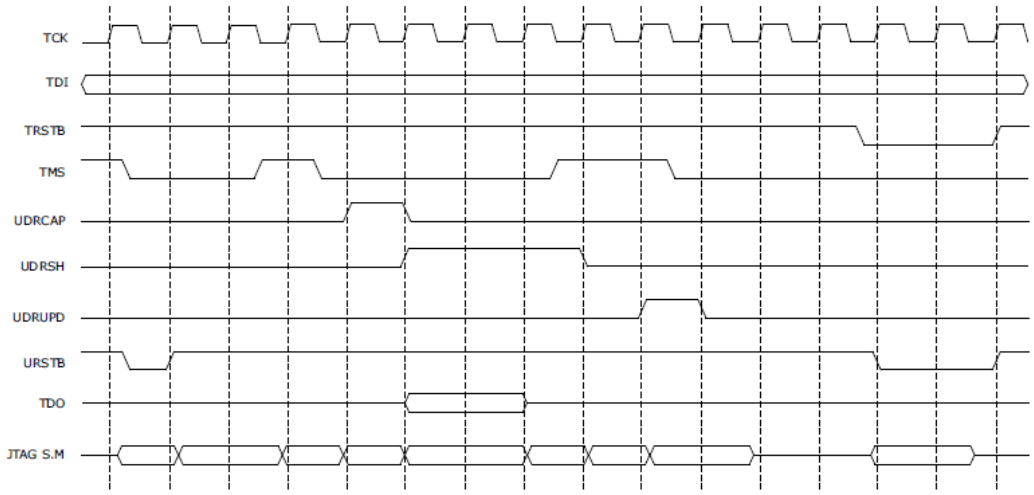

7.8.2 UJTAG_SEC Switching Characteristics

The following table describes characteristics of UJTAG_SEC switching.

Table 101 • UJTAG Security Performance Characteristics

Parameter	Symbol	Min	Typ	Max	Unit	Condition
TCK frequency	F_{TCK}				MHz	

7.8.3 USPI Switching Characteristics

The following section describes characteristics of USPI switching.

Table 102 • SPI Macro Interface Timing Characteristics

Parameter	Symbol	V_{DDI} = 3.3 V Max	V_{DDI} = 2.5 V Max	V_{DDI} = 1.8 V Max	V_{DDI} = 1.5 V Max	V_{DDI} = 1.2 V Max	Unit
Propagation delay from the fabric to pins[1]	TPD_MOSI	0.8	1	1.2	1.4	1.6	ns
	TPD_MISO	3.5	3.75	4	4.25	4.5	ns
	TPD_SS	3.5	3.75	4	4.25	4.5	ns
	TPD_SCK	3.5	3.75	4	4.25	4.5	ns
	TPD_MOSI_OE	3.5	3.75	4	4.25	4.5	ns
	TPD_SS_OE	3.5	3.75	4	4.25	4.5	ns
	TPD_SCK_OE	3.5	3.75	4	4.25	4.5	ns

1. Assumes CL of the relevant I/O standard as described in the input and output delay measurement tables.

Figure 7 • USPI Switching Characteristics

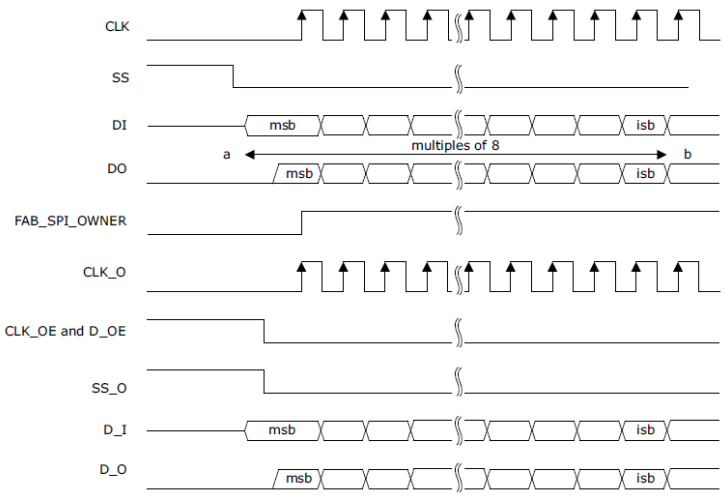

7.8.4 Tamper Detectors

The following section describes tamper detectors.

Table 103 • ADC Conversion Rate

Parameter	Description	Min	Typ[1]	Max	Unit
T_{CONV1}	Time from enable changing from zero to non-zero value to first conversion completes. Minimum value applies when POWEROFF = 0.	350		470	µs
T_{CONVN}	Time between subsequent channel conversions.		480		µs
T_{SETUP}	Data channel and output to valid asserted. Data is held until next conversion completes, that is >480 µs.	0			ns
T_{VALID}[2]	Width of the valid pulse.	1.5		2.5	µs
T_{RATE}	Time from start of first set of conversions to the start of the next set. Can be considered as the conversion rate. Is set by the conversion rate parameter.		Rate × 32		µs

1. Min, typ, and max refer to variation due to functional configuration and the raw TVS value. The actual internal correction time will vary based on the raw TVS value.
2. The pulse width varies depending on the time taken to complete the internal calibration multiplication, this can be up to 375 ns.

Note: Once the TVS block is active, the enable signal is sampled 25 ns before the falling edge of valid. The next enabled channel in the sequence 0-1-2-3 is started; that is, if channel 0 has just completed and only channels 0 and 3 are enabled, the next channel will be 3. When all the enabled channels in the sequence 0-1-2-3 are completed, the TVS waits for the conversion rate timer to expire. The enable signal may be changed at any time if it changes to 4’b0000 while valid is asserted (and 25 ns before valid is de-asserted), then no further conversions will be started.

Table 104 • Temperature and Voltage Sensor Electrical Characteristics

Parameter	Min	Typ	Max	Unit	Condition
Temperature sensing range	–40		125	°C	
Temperature sensing accuracy	–10		10	°C	
Voltage sensing range	0.9		2.8	V	
Voltage sensing accuracy	–3.0		3.0	%	

Table 105 • Tamper Macro Timing Characteristics—Flags and Clearing

Parameter	Symbol	Typ	Max	Unit
From event detection to flag generation	T_{JTAG_ACTIVE}[1]	28	35	ns
	T_{MESH_ERR}[1]	1.8	2.5	µs
	T_{CLK_GLITCH}[1]		50	ns
	T_{CLK_FREQ}[1]		4	µs
	T_{LOW_VDD}[1, 3]	70	1000	µs
	T_{HIGH_VDD18}[1, 3]	85	1000	µs
	T_{HIGH_VDD25}[1, 3]	130	1000	µs
	T_{SECDEC}[1]		5	ns
	T_{DRI_ERR}[1]	14	18	µs
	T_{WDOG}[1]		5	ns
	T_{LOCK_ERR}[1]		5	ns
Time from system controller instruction execution to flag generation	$T_{INST_BUF_ACCESS}$[1, 2]	4	5	µs
	T_{INST_DEBUG}[1, 2]	3.3	4	µs
	$T_{INST_CHK_DIGEST}$[1, 2]	1.8	3	µs
	$T_{INST_EC_SETUP}$[1, 2]	1.8	2	µs
	$T_{INST_FACT_PRIV}$[1, 2]	3.8	5	µs
	$T_{INST_KEY_VAL}$[1, 2]	2.5	3.5	µs
	T_{INST_MISC}[1, 2]	1.5	2	µs
	$T_{INST_PASSCODE_MATCH}$[1, 2]	2.5	3	µs
	$T_{INST_PASSCODE_SETUP}$[1, 2]	4.2	5	µs
	T_{INST_PROG}[1, 2]	3.8	4.5	µs
	$T_{INST_PUB_INFO}$[1, 2]	4	4.5	µs
	$T_{INST_ZERO_RECO}$[1, 2]	2.5	3	µs
	$T_{INST_PASSCODE_FAIL}$[1, 2]	170	180	µs
	$T_{INST_KEY_VAL_FAIL}$[1, 2]	92	110	µs
	T_{INST_UNUSED}[1, 2]	4	5	µs
Time from sending the CLEAR to deassertion on FLAG	T_{CLEAR_FLAG}	17	23	ns

1. The timing does not impact the user design, but it is useful for security analysis.
2. System service requests from the fabric will interrupt the system controller delaying the generation of the flag.
3. Timing of these depends highly on supply ramp rate.

Table 106 • Tamper Macro Response Timing Characteristics

Parameter	Symbol	Typ	Max	Unit
Time from triggering the response to all I/Os disabled	$T_{IO_DISABLE}$	45	63	ns
Time from negation of RESPONSE to all I/Os re-enabled	$T_{CLR_IO_DISABLE}$	34	51	ns
Time from triggering the response to security locked	$T_{LOCKDOWN}$		20	ns
Time from negation of RESPONSE to earlier security unlock condition	$T_{CLR_LOCKDOWN}$		20	ns

Parameter	Symbol	Typ	Max	Unit
Time from triggering the response to device enters RESET	T_{tr_RESET}	11.7	14	µs
Time from triggering the response to start of zeroization	$T_{tr_ZEROLISE}$	7.4	8.2	ms

7.8.5 System Controller Suspend Switching Characteristics

The following table describes the characteristics of system controller suspend switching.

Table 107 • System Controller Suspend Entry and Exit Characteristics

Parameter	Symbol	Definition	Typ	Max	Unit
Time from TRSTb falling edge to SUSPEND_EN signal assertion	$T_{suspend_Tr}$[1, 2]	Suspend entry time from TRST_N assertion	42	44	ns
Time from TRSTb rising edge to ACTIVE signal assertion	$T_{suspend_exit}$	Suspend exit time from TRST_N negation	361	372	ns

1. ACTIVE indicates that the system controller is inactive or active regardless of the state of SUSPEND_EN.
2. ACTIVE signal must never be asserted with SUSPEND_EN is asserted.

7.8.6 Dynamic Reconfiguration Interface

The following table provides interface timing information for the DRI, which is an embedded APB slave interface within the FPGA fabric that does not use FPGA resources.

Table 108 • Dynamic Reconfiguration Interface Timing Characteristics

Parameter	Symbol	Max	Unit
PCLK frequency	F_{PD_PCLK}	200	MHz

7.8.7 User Voltage Detector Characteristics

The following table provides the electrical characteristics of the VDD (1.0 V), VDD18, and VDD25 voltage detectors. For proper operation of the voltage detectors, Vdd must be set to 1.0 V.

Table 109 • User Voltage Detector Electrical Characteristics

Parameter	Min	Typ	Max	Unit	Condition
$V_{DD_HIGH_DET}$	1.04		1.07	V	Temp= –40 ºC to 100 ºC; V_{DD18} = 1.8 V ±5%; V_{DD25}= 2.5 V ±5%
$V_{DD18_HIGH_DET}$	1.9		1.96	V	Temp= –40 ºC to 100 ºC; V_{DD} = 1.0 V ±3%; V_{DD25}= 2.5 V ±5%
$V_{DD25_HIGH_DET}$	2.66		2.74	V	Temp= –40 ºC to 100 ºC; V_{DD} = 1.0 V ±3%; V_{DD18}= 1.8 V ±5%
$V_{DD_LOW_DET}$	0.945		0.915	V	Temp= –40 ºC to 100 ºC; V_{DD18} = 1.8 ±5%; V_{DD25}= 2.5 V ±5%
$V_{DD18_LOW_DET}$	1.62		1.57	V	Temp= –40 ºC to 100 ºC; V_{DD} = 1.0 ±3%; V_{DD25}= 2.5 V ±5%
$V_{DD25_LOW_DET}$	2.31		2.21	V	Temp= –40 ºC to 100 ºC; V_{DD} = 1.0 ±3%; V_{DD18}= 1.8 V ±5%

7.9 Power-Up to Functional Timing

Microsemi non-volatile FPGA technology offers the fastest boot-time of any mid-range FPGA in the market. The following tables describes both cold-boot (from power-on) and warm-boot (assertion of DEVRST_N pin or assertion of reset from the tamper macro) timing. The power-up diagrams assume all power supplies to the device are stable.

7.9.1 Power-On (Cold) Reset Initialization Sequence

The following cold reset timing diagram shows the initialization sequencing of the device.

Figure 8 • Cold Reset Timing

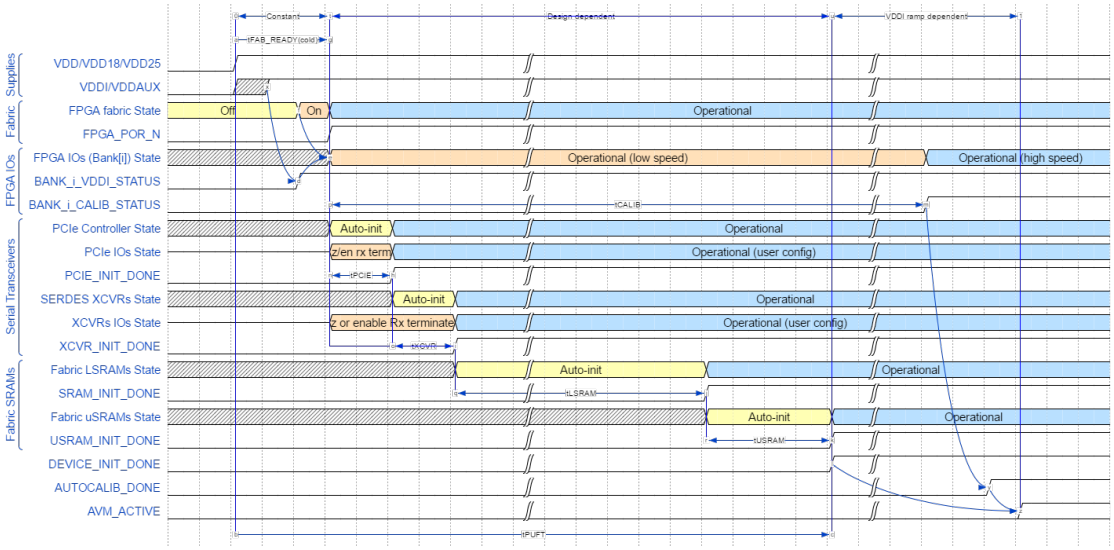

Notes:

- The previous diagram shows the case where VDDI/VDDAUX of I/O banks are powered either before or sufficiently soon after VDD/VDD18/VDD25 that the I/O bank enable time is measured from the assertion time of VDD/VDD18/VDD25 (that is, the PUFT specification). If VDDI/VDDAUX of I/O banks are powered sufficiently after VDD/VDD18/VDD25, then the I/O bank enable time is measured from the assertion of VDDI/VDDAUX and is not specified by the PUFT specification. In this case, I/O operation is indicated by the assertion of BANK_i_VDDI_STATUS, rather than being measured relative to FABRIC_POR_N negation.
- AUTOCALIB_DONE assertion indicates the completion of calibration for any I/O banks specified by the user for auto-calibration. AUTOCALIB_DONE asserts independently of DEVICE_INIT_DONE. It may assert before or after DEVICE_INIT_DONE and is determined by the following:
  - How long after VDD/VDD18/VDD25 that VDDI/VDDAUX are powered on. Note that if any of the user-specified I/O banks are not powered on within the auto-calibration timeout window, then AUTOCALIB_DONE doesn't assert until after this timeout.
  - The specified ramp times of VDDI of each I/O bank designated for auto-calibration.
  - How much auto-initialization is to be performed for the PCIe, SERDES transceivers, and fabric LSRAMs.
- If any of the I/O banks specified for auto-calibration do not have their VDDI/VDDAUX powered on within the auto-calibration timeout window, then it will be approximately auto-calibrated whenever VDDI/VDDAUX is subsequently powered on. To obtain an accurate calibration however, on such IO banks, it is necessary to initiate a re-calibration (using CALIB_START from fabric).

- AVM_ACTIVE only asserts if avionics mode is being used. It is asserted when the later of DEVICE_INIT_DONE or AUTOCALIB_DONE assert.

7.9.2 Warm Reset Initialization Sequence

The following warm reset timing diagram shows the initialization sequencing of the device when either DEVRST_N or TAMPER_RESET_DEVICE signals are asserted.

Figure 9 • Warm Reset Timing

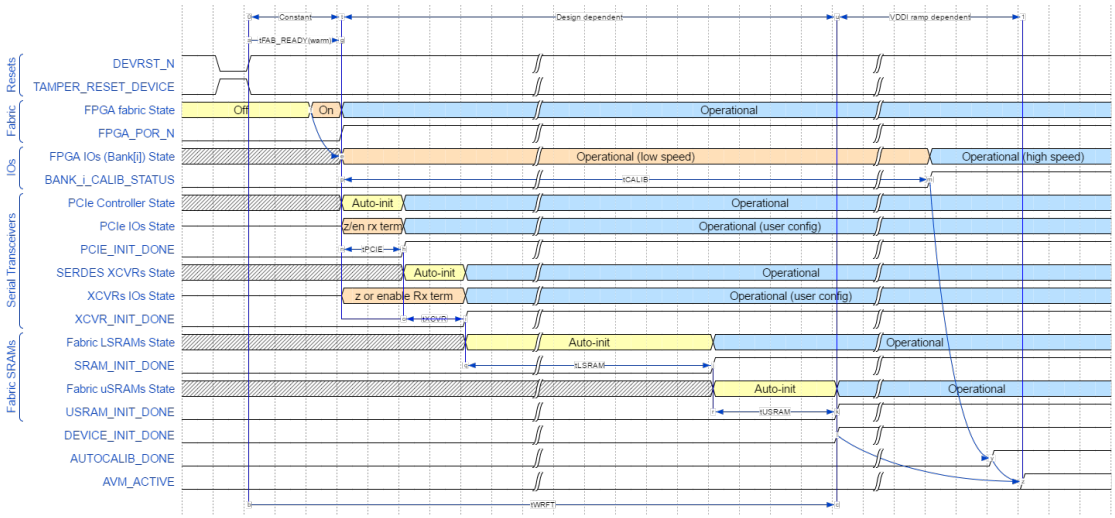

7.9.3 Power-On Reset Voltages

The following sections describe the power-on reset voltages.

7.9.3.1 Main Supplies

The start of power-up to functional time (T_{PUFT}) is defined as the point at which the latest of the main supplies (VDD, VDD18, VDD25) reach the reference voltage levels specified in the following table. This starts the process of releasing the reset of the device and powering on the FPGA fabric and IOs.

Table 110 • POR Ref Voltages

Supply	Power-On Reset Start Point (V)	Note
VDD	0.95	Applies to both 1.0 V and 1.05 V operation.
VDD18	1.71	
VDD25	2.25	

7.9.3.2 I/O-Related Supplies

For the I/Os to become functional (for low speed, sub-400 MHz operation), the (per-bank) I/O supplies (VDDI, VDDAUX) must reach the trip point voltage levels specified in the following table and the main supplies above must also be powered on.

Table 111 • I/O-Related Supplies

Supply	I/O Power-Up Start Point (V)
VDDI	0.85
VDDAUX	1.6

There are no sequencing requirements for the power supplies. However, VDDI3 and must be valid at same time as the main supplies. The other I/O supplies (VDDI, VDDAUX) have no effect on power-up of FPGA fabric (that is, the fabric still powers up even if the I/O supplies of some I/O banks remain powered off).

7.9.4 User Design Dependence of Power-Up Times

Some phases of the device initialization are user design dependent, as the device automatically initializes certain resources to user-specified configurations if those resources are used in the design. It is necessary to compute the overall power-up to functional time by referencing the following tables and adding the relevant phases, according to the design configuration. The following equation refers to timing parameters specified in the above timing diagrams. Please note T_{PCIE} , T_{XCVR}, T_{LSRAM}, and T_{USRAM} can be found in the PolarFire FPGA device power-up and resets user guide UG0725.

$$T_{PUFT} = T_{FAB_READY(cold)} + \max((T_{PCIE} + T_{XCVR} + T_{LSRAM} + T_{USRAM}), T_{CALIB})$$

$$T_{WRFT} = T_{FAB_READY(warm)} + \max((T_{PCIE} + T_{XCVR} + T_{LSRAM} + T_{USRAM}), T_{CALIB})$$

Note: T_{PCIE}, T_{XCVR}, T_{LSRAM}, T_{USRAM}, and T_{CALIB} are common to both cold and warm reset scenarios.

Auto-initialization of FPGA (if required) occurs in parallel with I/O calibration. The device may be considered fully functional only when the later of these two activities has finished, which may be either one, depending on the configuration, as may be calculated from the following tables. Note that I/O calibration may extend beyond T_{PUFT} (as I/O calibration process is independent of main device power-on and is instead dependent on I/O bank supply relative power-on time and ramp times). The previous timing diagram for power-on initialization shows the earliest that I/Os could be enabled, if the I/O power supplies are powered on before or at the same time as the main supplies.

7.9.5 Cold Reset to Fabric and I/Os (Low Speed) Functional

The following table specifies the minimum, typical, and maximum times from the power supplies reaching the above trip point levels until the FPGA fabric is operational and the FPGA IOs are functional for low-speed (sub-400 MHz) operation.

Table 112 • Cold Boot

Power-On (Cold) Reset to Fabric and I/O Operational	Min	Typ	Max	Unit
Time when input pins start working – $T_{IN_ACTIVE(cold)}$	0.92	4.38	7.84	ms
Time when weak pull-ups are enabled – $T_{PU_PD_ACTIVE(cold)}$	0.92	4.38	7.84	ms
Time when fabric is operational – $T_{FAB_READY(cold)}$	0.95	4.41	7.87	ms
Time when output pins start driving – $T_{OUT_ACTIVE(cold)}$	0.97	4.43	7.89	ms

7.9.6 Warm Reset to Fabric and I/Os (Low Speed) Functional

The following table specifies the minimum, typical, and maximum times from the negation of the warm reset event until the FPGA fabric is operational and the FPGA IOs are functional for low-speed (sub-400 MHz) operation.

Table 113 • Warm Boot

Warm Reset to Fabric and I/O Operational	Min	Typ	Max	Unit
Time when input pins start working – $T_{IN_ACTIVE(warm)}$	0.65	1.63	2.62	ms
Time when weak pull-ups/pull-downs are enabled – $T_{PU_PD_ACTIVE(warm)}$	0.65	1.63	2.62	ms
Time when fabric is operational – $T_{FAB_READY(warm)}$	0.68	1.66	2.65	ms
Time when output pins start driving – $T_{OUT_ACTIVE(warm)}$	0.70	1.68	2.67	ms

7.9.7 Miscellaneous Initialization Parameters

In the following table, T_{FAB_READY} refers to either $T_{FAB_READY(cold)}$ or $T_{FAB_READY(warm)}$ as specified in the previous tables, depending on whether the initialization is occurring as a result of a cold or warm reset, respectively.

Table 114 • Cold and Warm Boot

Parameter	Symbol	Min	Typ	Max	Unit	Condition
The time from T_{FAB_READY} to ready to program through JTAG/SPI-Slave		0	0	0	ms	
The time from T_{FAB_READY} to auto-update start			T_{PUF_OVHD}[1]	T_{PUF_OVHD}[1]	ms	
The time from T_{FAB_READY} to programming recovery start			T_{PUF_OVHD}[1]	T_{PUF_OVHD}[1]	ms	
The time from T_{FAB_READY} to the tamper flags being available	T_{TAMPER_READY}	0	0	0	ms	
The time from T_{FAB_READY} to the Athena Crypto co-processor being available (for S devices only)	T_{CRYPTO_READY}	0	0	0	ms	

1. Programming depends on the PUF to power up. Refer to T_{PUF_OVHD} at section Secure NVM Performance (see page 74).

7.9.8 I/O Calibration

The following tables specify the initial I/O calibration time for the fastest and slowest supported VDDI ramp times of 0.2 ms to 50 ms, respectively. This only applies to I/O banks specified by the user to be auto-calibrated.

Table 115 • I/O Initial Calibration Time (TCALIB)

Ramp Time	Min (ms)	Max (ms)	Condition
0.2 ms	0.98	2.63	Applies to HSIO and GPIO banks
50 ms	41.62	62.19	Applies to HSIO and GPIO banks

Notes:

- The user may specify any VDDI ramp time in the range specified above. The nominal initial calibration time is given by the specified VDDI ramp time plus 2 ms.
- In order for IO calibration to start, VDDI and VDDAUX of the I/O bank must be higher than the trip point levels specified in I/O-Related Supplies (see page 83).

Table 116 • I/O Fast Recalibration Time (TRECALIB)

I/O Type	Min (ms)	Typ (ms)	Max (ms)	Condition
GPIO bank	0.04	0.14	0.24	GPIO configured for 3.3 V operation
HSIO bank	0.11	0.20	0.30	HSIO configured for 1.8 V operation

Note: In order to obtain fast re-calibration, the user must assert the relevant clock request signal from the FPGA fabric to the I/O bank controller.

7.10 Dedicated Pins

The following section describes the dedicated pins.

7.10.1 JTAG Switching Characteristics

The following table describes characteristics of JTAG switching.

Table 117 • JTAG Electrical Characteristics

Symbol	Description	Min	Typ	Max	Unit	Condition
T_{DISU}	TDI input setup time	0.0			ns	
T_{DIHD}	TDI input hold time	2.0			ns	
T_{TMSSU}	TMS input setup time	1.5			ns	
T_{TMSHD}	TMS input hold time	1.5			ns	
F_{TCK}	TCK frequency			25	MHz	
T_{TCKDC}	TCK duty cycle	40		60	%	
T_{TDOCQ}	TDO clock to Q out			8.4	ns	C_{LOAD} = 40 pf
T_{RSTBCQ}	TRSTB clock to Q out			23.5	ns	C_{LOAD} = 40 pf
T_{RSTBPW}	TRSTB min pulse width	50			ns	
$T_{RSTBREM}$	TRSTB removal time	0.0			ns	
$T_{RSTBREC}$	TRSTB recovery time	12.0			ns	
CIN_{TDI}	TDI input pin capacitance			5.3	pf	
CIN_{TMS}	TMS input pin capacitance			5.3	pf	
CIN_{TCK}	TCK input pin capacitance			5.3	pf	
CIN_{TRSTB}	TRSTB input pin capacitance			5.3	pf	

7.10.2 SPI Switching Characteristics

The following tables describe characteristics of SPI switching.

Table 118 • SPI Master Mode (PolarFire Master) During Programming

Parameter	Symbol	Min	Typ	Max	Unit	Condition
SCK frequency	F_{MSCK}			20	MHz	

Table 119 • SPI Master Mode (PolarFire Master) During Device Initialization

Parameter	Symbol	Min	Typ	Max	Unit	Condition
SCK frequency	F_{MSCK}			40	MHz	

Table 120 • SPI Slave Mode (PolarFire Slave)

Parameter	Symbol	Min	Typ	Max	Unit	Condition
SCK frequency	F_{SSCK}			80	MHz	

7.10.3 SmartDebug Probe Switching Characteristics

The following table describes characteristics of SmartDebug probe switching.

Table 121 • SmartDebug Probe Performance Characteristics

Parameter	Symbol	V_{DD} = 1.0 V STD	V_{DD} = 1.0 V – 1	V_{DD} = 1.05 V STD	V_{DD} = 1.05 V – 1	Unit
Maximum frequency of probe signal	F_{MAX}	100	100	100	100	MHz
Minimum delay of probe signal	T_{Min_delay}					ns
Maximum delay of probe signal	T_{Max_delay}					ns

7.10.4 DEVRST_N Switching Characteristics

The following table describes characteristics of DEVRST_N switching.

Table 122 • DEVRST_N Electrical Characteristics

Parameter	Symbol	Min	Typ	Max	Unit	Condition
DEVRST_N ramp time	DR_{RAMP}		10		µs	It must be a normal clean digital signal, with typical rise and fall times
DEVRST_N assert time	DR_{ASSERT}	1			µs	The minimum time for DEVRST_N assertion to be recognized
DEVRST_N de-assert time	$DR_{DEASSERT}$	2.75			ms	The minimum time DEVRST_N needs to be de-asserted before assertion

7.11 User Crypto

The following section describes user crypto.

7.11.1 TeraFire 5200B Switching Characteristics

The following table describes TeraFire 5200B switching characteristics.

Table 123 • TeraFire F5200B Switching Characteristics

Parameter	Symbol	VDD = 1.0 V STD	VDD = 1.0 V – 1	VDD = 1.05 V STD	VDD = 1.05 V – 1	Unit	Condition
F_{MAX} with DLL	F_{MAX_DLL}	189	189	189	189	MHz	–40 °C to 100 °C
F_{MIN} with DLL	F_{MIN_DLL}	125	125	125	125	MHz	–40 °C to 100 °C
F_{MAX} with DLL in bypass mode	$F_{MAX_DLL_BYPASS}$	70	70	70	70	MHz	–40 °C to 100 °C
F_{MIN} with DLL in bypass mode	$F_{MIN_DLL_BYPASS}$	0	0	0	0	MHz	–40 °C to 100 °C

7.11.2 TeraFire 5200B Throughput Characteristics

The following tables for each algorithm describe the TeraFire 5200B throughput characteristics.

Note: Throughput cycle count collected with Athena TeraFire Core and RISCV running at 70 MHz.

Table 124 • AES

Modes	Message Size (Bits)	Athena TeraFire Crypto Core Clock-Cycles	CAL Delay in CPU Clock-Cycles
AES-ECB-128 encrypt[1]	128	511	1011
	64K	48109	927
AES-ECB-128 decrypt[1]	128	557	1328
	64K	48385	1282
AES-ECB-256 encrypt[1]	128	527	1333
	64K	56301	1303
AES-ECB-256 decrypt[1]	128	589	1356
	64K	56673	1410
AES-CBC-256 encrypt[1]	128	588	1316
	64K	58691	1286
AES-CBC-256 decrypt[1]	128	617	1676
	64K	56853	1730
AES-GCM-128 encrypt[1], 128-bit tag, (full message encrypted /authenticated)	128	1921	1701
	64K	58022	1640
AES-GCM-256 encrypt[1], 128-bit tag, (full message encrypted /authenticated)	128	1969	1718
	64K	58054	1803

1. With DPA counter measures.

Table 125 • GMAC

Modes	Message Size (Bits)	Athena TeraFire Crypto Core Clock-Cycles	CAL Delay In CPU Clock-Cycles
AES-GCM-256[1], 128-bit tag, (message is only authenticated)	128	1859	1752
	64K	47659	1854

1. With DPA counter measures.

Table 126 • HMAC

Modes	Message Size (Bits)	Athena TeraFire Crypto Core Clock-Cycles	CAL Delay In CPU Clock-Cycles
HMAC-SHA-256[1], 256-bit key	512	7461	1616
	64K	86319	1350
HMAC-SHA-384[1], 384-bit key	1024	13017	1438
	64K	104055	1438

1. With DPA counter measures.

Table 127 • CMAC

Modes	Message Size (Bits)	Athena TeraFire Crypto Core Clock-Cycles	CAL Delay In CPU Clock-Cycles
AES-CMAC-256[1] (message is only authenticated)	128	446	8434
	64K	45494	110209

1. With DPA counter measures.

Table 128 • KEY TREE

Modes	Message Size (Bits)	Athena TeraFire Crypto Core Clock-Cycles	CAL Delay In CPU Clock-Cycles
128-bit nonce + 8-bit optype		102457	2173
256-bit nonce + 8-bit optype		103218	2359

Table 129 • SHA

Modes	Message Size (Bits)	Athena TeraFire Crypto Core Clock-Cycles	CAL Delay In CPU Clock-Cycles
SHA-1[1]	512	2370	816
	64K	75528	709
SHA-256[1]	512	2500	656
	64K	82704	656
SHA-384[1]	1024	4122	712
	64K	98174	656
SHA-512[1]	1024	4122	652
	64K	98174	653

1. With DPA counter measures.

Table 130 • ECC

Modes	Message Size (Bits)	Athena TeraFire Crypto Core Clock-Cycles	CAL Delay In CPU Clock-Cycles
ECDSA SigGen, P-384/SHA-384[1]	1024	12525647	5072
	8K	12540387	5072
ECDSA SigGen, P-384/SHA-384	1024	5502896	5071
	8K	5513718	5071
ECDSA SigVer, P-384/SHA-384[1]	1024	6243821	4683
	8K	6321110	4422
ECDSA SigVer, P-384/SHA-384	1024	6243821	4422
	8K	6321110	4422
Key Agreement (KAS), P-384		5039125	10318
Point Multiply, P-256[1]		5177474	4434
Point Multiply, P-384[1]		12055519	5086
Point Multiply, P-521[1]		26889271	6470
Point Addition, P-384		3018067	5303
KeyGen (PKG), P-384		12052230	7909
Point Verification, P-384		5091	3354

1. With DPA counter measures.

Table 131 • IFC (RSA)

Modes	Message Size (Bits)	Athena TeraFire Crypto Core Clock-Cycles	CAL Delay In CPU Clock-Cycles
Encrypt, RSA-2048, e=65537	2048	436972	8287
Encrypt, RSA-3072, e=65537	3072	962162	12063
Decrypt, RSA-2048[1], CRT	2048	26847616	15261
Decrypt, RSA-3072[1], CRT	3072	75168689	22488
Decrypt, RSA-4096, CRT	4096	88789629	23585
Decrypt, RSA-3072, CRT	3072	38202717	18838
SigGen, RSA-3072/SHA-384[1] ,CRT, PKCS #1 V 1 1.5	1024	75156973	19562
	8K	75222026	18880
SigGen, RSA-3072/SHA-384, PKCS #1, V 1.5	1024	148092303	13622
	8K	148102319	13622
SigVer, RSA-3072/SHA-384, e = 65537, PKCS #1 V 1.5	1024	970959	11769
	8K	981755	11769
SigVer, RSA-2048/SHA-256, e = 65537, PKCS #1 V 1.5	1024	443593	8490
	8K	452751	8443
SigGen, RSA-3072/SHA-384, ANSI X9.31	1024	147143879	13624
	8K	147153109	13417

Modes	Message Size (Bits)	Athena TeraFire Crypto Core Clock-Cycles	CAL Delay In CPU Clock-Cycles
SigVer, RSA-3072/SHA-384, e = 65537, ANSI X9.31	1024	972788	11268
	8K	983643	11215

1. With DPA counter measures.

Table 132 • FFC (DH)

Modes	Message Size (Bits)	Athena TeraFire Crypto Core Clock-Cycles	CAL Delay In CPU Clock-Cycles
SigGen, DSA-3072/SHA-384[1]	1024	27932434	13271
	8K	27946636	13166
SigGen, DSA-3072/SHA-384	1024	12086324	13028
	8K	12097138	12862
SigVer, DSA-3072/SHA-384	1024	24711796	14689
	8K	24418930	14689
SigVer, DSA-2048/SHA-256	1024	9673222	10717
	8K	9803028	10717
Key Agreement (KAS), DH-3072 (p=3072, security=256)		4920705	9519
Key Agreement (KAS), DH-3072 (p=3072, security=256)[1]		78871914	9495

1. With DPA counter measures.

Table 133 • NRBG

Modes	Message Size (Bits)	Athena TeraFire Crypto Core Clock-Cycles	CAL Delay In CPU Clock-Cycles
Instantiate: strength, s=256, 384-bit nonce, 384-bit personalization string		18221	3076
Reseed: no additional input, s=256		13585	1056
Reseed: 384-bit additional input, s=256		15922	995
Generate: (no additional input), prediction resistance enabled, s=256	128	15262	1672
	8K	27169	7837
Generate: (no additional input), prediction resistance disabled, s=256	128	2138	781
	8K	14045	7837
Generate: (384-bit additional input), prediction resistance enabled, s=256	128	21299	1620
	8K	33206	8563
Generate: (384-bit additional input), prediction resistance disabled, s=256	128	11657	1507
	8K	23564	8563
Un-instantiate		761	502

Microsemi Headquarters
One Enterprise, Aliso Viejo,
CA 92656 USA
Within the USA: +1 (800) 713-4113
Outside the USA: +1 (949) 380-6100
Sales: +1 (949) 380-6136
Fax: +1 (949) 215-4996
Email: sales.support@microsemi.com
www.microsemi.com

© 2017–2019 Microsemi. All rights reserved. Microsemi and the Microsemi logo are trademarks of Microsemi Corporation. All other trademarks and service marks are the property of their respective owners.

Microsemi makes no warranty, representation, or guarantee regarding the information contained herein or the suitability of its products and services for any particular purpose, nor does Microsemi assume any liability whatsoever arising out of the application or use of any product or circuit. The products sold hereunder and any other products sold by Microsemi have been subject to limited testing and should not be used in conjunction with mission-critical equipment or applications. Any performance specifications are believed to be reliable but are not verified, and Buyer must conduct and complete all performance and other testing of the products, alone and together with, or installed in, any end-products. Buyer shall not rely on any data and performance specifications or parameters provided by Microsemi. It is the Buyer's responsibility to independently determine suitability of any products and to test and verify the same. The information provided by Microsemi hereunder is provided "as is, where is" and with all faults, and the entire risk associated with such information is entirely with the Buyer. Microsemi does not grant, explicitly or implicitly, to any party any patent rights, licenses, or any other IP rights, whether with regard to such information itself or anything described by such information. Information provided in this document is proprietary to Microsemi, and Microsemi reserves the right to make any changes to the information in this document or to any products and services at any time without notice.

Microsemi, a wholly owned subsidiary of Microchip Technology Inc. (Nasdaq: MCHP), offers a comprehensive portfolio of semiconductor and system solutions for aerospace & defense, communications, data center and industrial markets. Products include high-performance and radiation-hardened analog mixed-signal integrated circuits, FPGAs, SoCs and ASICs; power management products; timing and synchronization devices and precise time solutions, setting the world's standard for time; voice processing devices; RF solutions; discrete components; enterprise storage and communication solutions; security technologies and scalable anti-tamper products; Ethernet solutions; Power-over-Ethernet ICs and midspans; as well as custom design capabilities and services. Microsemi is headquartered in Aliso Viejo, California, and has approximately 4,800 employees globally. Learn more at www microsemi.com.

51700141