Freescale Semiconductor
Data Sheet: Technical Data

Document Number: MPC5200BDS
Rev. 4, 02/2010

MPC5200B Data Sheet

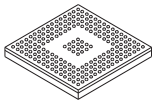

TEPBGA–272
27 mm x 27 mm

Key features are shown below.

- MPC603e series e300 core
  - Superscalar architecture
  - 760 MIPS at 400 MHz (–40 °C to +85 °C)
  - 16 KB Instruction cache, 16 KB Data cache
  - Double precision FPU
  - Instruction and Data MMU
  - Standard and Critical interrupt capability
- SDRAM / DDR Memory Interface
  - Up to 133 MHz operation
  - SDRAM and DDR SDRAM support
  - 256 MB addressing range per CS, two CS available
  - 32-bit data bus
  - Built-in initialization and refresh
- Flexible multi-function External Bus Interface
  - Supports interfacing to ROM/Flash/SRAM memories or other memory mapped devices
  - 8 programmable Chip Selects
  - Non-multiplexed data access using 8-/16-/32-bit databus with up to 26-bit address
  - Short or Long Burst capable
  - Multiplexed data access using 8-/16-/32-bit databus with up to 25-bit address
- Peripheral Component Interconnect (PCI) Controller
  - Version 2.2 PCI compatibility
  - PCI initiator and target operation
  - 32-bit PCI Address/Data bus
  - 33 and 66 MHz operation
  - PCI arbitration function
- ATA Controller
  - Version 4 ATA compatible external interface—IDE Disk Drive connectivity
- BestComm DMA subsystem
  - Intelligent virtual DMA Controller
  - Dedicated DMA channels to control peripheral reception and transmission
  - Local memory (SRAM 16 KB)
- 6 Programmable Serial Controllers (PSC)
  - UART or RS232 interface
  - CODEC interface for Soft Modem, Master/Slave CODEC Mode, I^2S and AC97
  - Full duplex SPI mode
  - IrDA mode from 2400 bps to 4 Mbps
- Fast Ethernet Controller (FEC)
  - Supports 100Mbps IEEE 802.3 MII, 10 Mbps IEEE 802.3 MII, 10 Mbps 7-wire interface
- Universal Serial Bus Controller (USB)
  - USB Revision 1.1 Host
  - Open Host Controller Interface (OHCI)
  - Integrated USB Hub, with two ports.
- Two Inter-Integrated Circuit Interfaces (I^2C)
- Serial Peripheral Interface (SPI)
- Dual CAN 2.0 A/B Controller (MSCAN)
  - Implementation of version 2.0A/B CAN protocol
  - Standard and extended data frames
- J1850 Byte Data Link Controller (BDLC)
- J1850 Class B data communication network interface compatible and ISO compatible for low speed (<125 kbps) serial data communications in automotive applications.
- Supports 4X mode, 41.6 kbps
- In-frame response (IFR) types 0, 1, 2, and 3 supported
- Systems level features
  - Interrupt Controller supports four external interrupt request lines and 47 internal interrupt sources
  - GPIO/Timer functions
    Up to 56 total GPIO pins that support a variety of interrupt/WakeUp capabilities.
    Eight GPIO pins with timer capability supporting input capture, output compare, and pulse width modulation (PWM) functions
  - Real-time Clock with one-second resolution
  - Systems Protection (watch dog timer, bus monitor)
  - Individual control of functional block clock sources
  - Power management: Nap, Doze, Sleep, Deep Sleep modes
  - Support of WakeUp from low power modes by different sources (GPIO, RTC, CAN)
- Test/Debug features
  - JTAG (IEEE 1149.1 test access port)
  - Common On-chip Processor (COP) debug port
- On-board PLL and clock generation

Freescale reserves the right to change the detail specifications as may be required to permit improvements in the design of its products.

© Freescale Semiconductor, Inc., 2008, 2010. All rights reserved.

Downloaded from Arrow.com.

Table of Contents

1 Electrical and Thermal Characteristics 4
1.1 DC Electrical Characteristics 4
1.1.1 Absolute Maximum Ratings 4
1.1.2 Recommended Operating Conditions 4
1.1.3 DC Electrical Specifications 5
1.1.4 Electrostatic Discharge 7
1.1.5 Power Dissipation 7
1.1.6 Thermal Characteristics 9
1.2 Oscillator and PLL Electrical Characteristics 10
1.2.1 System Oscillator Electrical Characteristics . . . 11
1.2.2 RTC Oscillator Electrical Characteristics 11
1.2.3 System PLL Electrical Characteristics 11
1.2.4 e300 Core PLL Electrical Characteristics 11
1.3 AC Electrical Characteristics 12
1.3.1 AC Test Timing Conditions: 12
1.3.2 AC Operating Frequency Data 13
1.3.3 Clock AC Specifications 13
1.3.4 Resets 14
1.3.5 External Interrupts 15
1.3.6 SDRAM 17
1.3.7 PCI 21
1.3.8 Local Plus Bus 23
1.3.9 ATA 28
1.3.10 Ethernet 38
1.3.11 USB 40
1.3.12 SPI 41
1.3.13 MSCAN 45
1.3.14 I^2C 45
1.3.15 J1850 46
1.3.16 PSC 47
1.3.17 GPIOs and Timers 54
1.3.18 IEEE 1149.1 (JTAG) AC Specifications 56
2 Package Description 57
2.1 Package Parameters 57
2.2 Mechanical Dimensions 58
2.3 Pinout Listings 59
3 System Design Information 64
3.1 Power Up/Down Sequencing 64
3.1.1 Power Up Sequence 65
3.1.2 Power Down Sequence 65
3.2 System and CPU Core AVDD Power Supply Filtering . 65
3.3 Pull-up/Pull-down Resistor Requirements 65
3.3.1 Pull-down Resistor Requirements for TEST pins 65
3.3.2 Pull-up Requirements for the PCI Control Lines 66
3.3.3 Pull-up/Pull-down Requirements for MEM_MDQS Pins (SDRAM) 66
3.3.4 .Pull-up/Pull-down Requirements for MEM_MDQS Pins (DDR 16-bit Mode) 66
3.4 JTAG 66
3.4.1 JTAG_TRST 66
3.4.2 e300 COP/BDM Interface 67
4 Ordering Information 69
5 Document Revision History 70

Downloaded from Arrow.com.

Figure 1 shows a simplified MPC5200B block diagram.

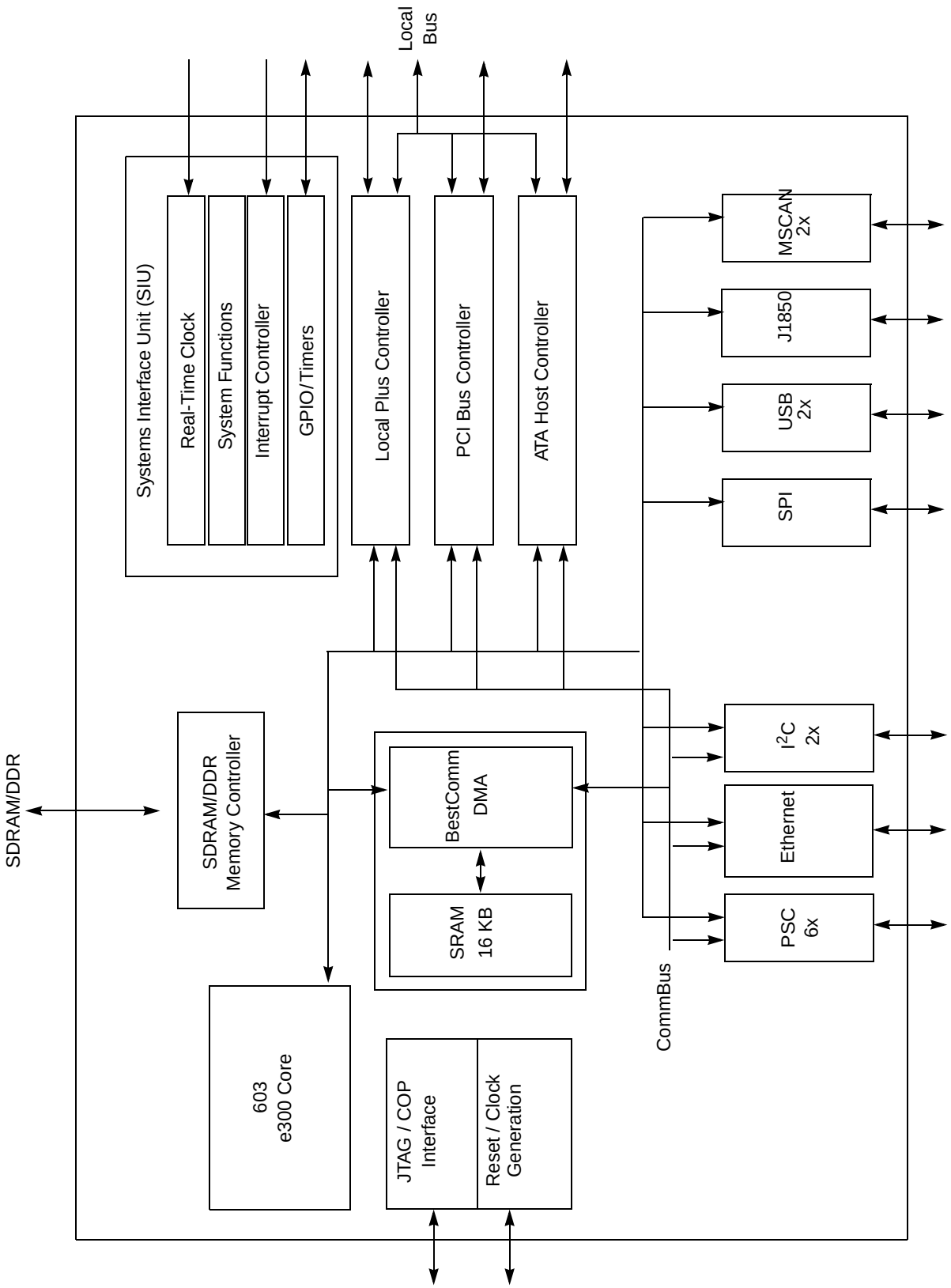

Figure 1. Simplified Block Diagram—MPC5200B

Downloaded from Arrow.com.

1 Electrical and Thermal Characteristics

1.1 DC Electrical Characteristics

1.1.1 Absolute Maximum Ratings

The tables in this section describe the MPC5200B DC Electrical characteristics. Table 1 gives the absolute maximum ratings.

Table 1. Absolute Maximum Ratings[(1)]

Characteristic	Sym	Min	Max	Unit	SpecID
Supply voltage — e300 core and peripheral logic	VDD_CORE	–0.3	1.8	V	D1.1
Supply voltage — I/O buffers	VDD_IO, VDD_MEM_IO	–0.3	3.6	V	D1.2
Supply voltage — System APLL	SYS_PLL_AVDD	–0.3	2.1	V	D1.3
Supply voltage — e300 APLL	CORE_PLL_AVDD	–0.3	2.1	V	D1.4
Input voltage (VDD_IO)	Vin	–0.3	VDD_IO + 0.3	V	D1.5
Input voltage (VDD_MEM_IO)	Vin	–0.3	VDD_MEM_IO + 0.3	V	D1.6
Input voltage overshoot	Vinos	—	1.0	V	D1.7
Input voltage undershoot	Vinus	—	1.0	V	D1.8
Storage temperature range	Tstg	–55	150	^{o}C	D1.9

1 Absolute maximum ratings are stress ratings only, and functional operation at the maximums is not guaranteed. Stresses beyond those listed may affect device reliability or cause permanent damage.

1.1.2 Recommended Operating Conditions

Table 2 gives the recommended operating conditions.

Table 2. Recommended Operating Conditions

Characteristic	Sym	Min[(1)]	Max[(1)]	Unit	SpecID
Supply voltage — e300 core and peripheral logic	VDD_CORE	1.42	1.58	V	D2.1
Supply voltage — standard I/O buffers	VDD_IO	3.0	3.6	V	D2.2
Supply voltage — memory I/O buffers (SDR)	$VDD_MEM_IO_{SDR}$	3.0	3.6	V	D2.3
Supply voltage — memory I/O buffers (DDR)	$VDD_MEM_IO_{DDR}$	2.42	2.63	V	D2.4
Supply voltage — System APLL	SYS_PLL_AVDD	1.42	1.58	V	D2.5
Supply voltage — e300 APLL	CORE_PLL_AVDD	1.42	1.58	V	D2.6

Downloaded from Arrow.com.

Table 2. Recommended Operating Conditions (continued)

Characteristic	Sym	Min[1]	Max[1]	Unit	SpecID
Input voltage — standard I/O buffers	Vin	0	VDD_IO	V	D2.7
Input voltage — memory I/O buffers (SDR)	Vin_{SDR}	0	$VDD_MEM_IO_{SDR}$	V	D2.8
Input voltage — memory I/O buffers (DDR)	Vin_{DDR}	0	$VDD_MEM_IO_{DDR}$	V	D2.9
Ambient operating temperature range[2]	T_A	–40	+85	^oC	D2.10
Die junction operating temperature range	Tj	–40	+115	^oC	D2.12

1 These are recommended and tested operating conditions. Proper device operation outside these conditions is not guaranteed.

2 Maximum e300 core operating frequency is 400 MHz.

1.1.3 DC Electrical Specifications

Table 3 gives the DC Electrical characteristics for the MPC5200B at recommended operating conditions (see Table 2).

Table 3. DC Electrical Specifications

Characteristic	Condition	Sym	Min	Max	Unit	SpecID
Input high voltage	Input type = TTL $VDD_IO/VDD_MEM_IO_{SDR}$	V_{IH}	2.0	—	V	D3.1
Input high voltage	Input type = TTL $VDD_MEM_IO_{DDR}$	V_{IH}	1.7	—	V	D3.2
Input high voltage	Input type = PCI VDD_IO	V_{IH}	2.0	—	V	D3.3
Input high voltage	Input type = SCHMITT VDD_IO	V_{IH}	2.0	—	V	D3.4
Input high voltage	SYS_XTAL_IN	CV_{IH}	2.0	—	V	D3.5
Input high voltage	RTC_XTAL_IN	CV_{IH}	2.0	—	V	D3.6
Input low voltage	Input type = TTL $VDD_IO/VDD_MEM_IO_{SDR}$	V_{IL}	—	0.8	V	D3.7
Input low voltage	Input type = TTL $VDD_MEM_IO_{DDR}$	V_{IL}	—	0.7	V	D3.8
Input low voltage	Input type = PCI VDD_IO	V_{IL}	—	0.8	V	D3.9
Input low voltage	Input type = SCHMITT VDD_IO	V_{IL}	—	0.8	V	D3.10
Input low voltage	SYS_XTAL_IN	CV_{IL}	—	0.8	V	D3.11
Input low voltage	RTC_XTAL_IN	CV_{IL}	—	0.8	V	D3.12
Input leakage current	Vin = 0 or $VDD_IO/VDD_IO_MEM_{SDR}$ (depending on input type[1])	I_{IN}	—	±2	μA	D3.13
Input leakage current	SYS_XTAL_IN Vin = 0 or VDD_IO	I_{IN}	—	±10	μA	D3.14

Downloaded from Arrow.com.

Table 3. DC Electrical Specifications (continued)

Characteristic	Condition	Sym	Min	Max	Unit	SpecID
Input leakage current	RTC_XTAL_IN Vin = 0 or VDD_IO	I_{IN}	—	±10	µA	D3.15
Input current, pullup resistor	PULLUP VDD_IO Vin = 0	I_{INpu}	40	109	µA	D3.16
Input current, pullup resistor — memory I/O buffers	PULLUP_MEM $VDD_IO_MEM_{SDR}$ Vin = 0	I_{INpu}	41	111	µA	D3.17
Input current, pulldown resistor	PULLDOWN VDD_IO Vin = VDD_IO	I_{INpd}	36	106	µA	D3.18
Output high voltage	IOH is driver dependent(2) VDD_IO, $VDD_IO_MEM_{SDR}$	V_{OH}	2.4	—	V	D3.19
Output high voltage	IOH is driver dependent(2) $VDD_IO_MEM_{DDR}$	V_{OHDDR}	1.7	—	V	D3.20
Output low voltage	IOL is driver dependent(2) VDD_IO, $VDD_IO_MEM_{SDR}$	V_{OL}	—	0.4	V	D3.21
Output low voltage	IOL is driver dependent(2) $VDD_IO_MEM_{DDR}$	V_{OLDDR}	—	0.4	V	D3.22
DC Injection Current Per Pin(3)		I_{CS}	–1.0	1.0	mA	D3.23
Capacitance	Vin = 0 V, f = 1 MHz	C_{in}	—	15	pF	D3.24

1 Leakage current is measured with output drivers disabled and pull-up/pull-downs inactive.

2 See Table 4 for the typical drive capability of a specific signal pin based on the type of output driver associated with that pin as listed in Table 52.

3 All injection current is transferred to VDD_IO/VDD_IO_MEM. An external load is required to dissipate this current to maintain the power supply within the specified voltage range. Total injection current for all digital input-only and all digital input/output pins must not exceed 10 mA. Exceeding this limit can cause disruption of normal operation.

Table 4. Drive Capability of MPC5200B Output Pins

Driver Type	Supply Voltage	I_{OH}	I_{OL}	Unit	SpecID
DRV4	VDD_IO = 3.3 V	4	4	mA	D3.25
DRV8	VDD_IO = 3.3 V	8	8	mA	D3.26
DRV8_OD	VDD_IO = 3.3 V	—	8	mA	D3.27
DRV16_MEM	VDD_IO_MEM = 3.3 V	16	16	mA	D3.28
DRV16_MEM	VDD_IO_MEM = 2.5 V	16	16	mA	D3.29
PCI	VDD_IO = 3.3 V	16	16	mA	D3.30

Downloaded from Arrow.com.

1.1.4 Electrostatic Discharge

CAUTION

This device contains circuitry that protects against damage due to high-static voltage or electrical fields. However, it is advised that normal precautions be taken to avoid application of any voltages higher than maximum-rated voltages. Operational reliability is enhanced if unused inputs are tied to an appropriate logic voltage level (GND or V_{CC}). Table 7 gives package thermal characteristics for this device.

Table 5. ESD and Latch-Up Protection Characteristics

Sym	Rating	Min	Max	Unit	SpecID
V_{HBM}	Human Body Model (HBM)—JEDEC JESD22-A114-B	2000	—	V	D4.1
V_{MM}	Machine Model (MM)—JEDEC JESD22-A115	200	—	V	D4.2
V_{CDM}	Charge Device Model (CDM)—JEDEC JESD22-C101	500	—	V	D4.3
I_{LAT}	Latch-up Current at T_A=85 ^oC positive negative	 +100 –100	—	mA	D4.4
I_{LAT}	Latch-up Current at T_A=27 ^oC positive negative	 +200 –200	—	mA	D4.5

1.1.5 Power Dissipation

Power dissipation of the MPC5200B is caused by 3 different components: the dissipation of the internal or core digital logic (supplied by VDD_CORE), the dissipation of the analog circuitry (supplied by SYS_PLL_AVDD and CORE_PLL_AVDD) and the dissipation of the IO logic (supplied by VDD_IO_MEM and VDD_IO). Table 6 details typical measured core and analog power dissipation figures for a range of operating modes. However, the dissipation due to the switching of the IO pins can not be given in general, but must be calculated by the user for each application case using the following formula:

$$P_{IO} = P_{IOint} + \sum_{M} N \times C \times VDD_IO^2 \times f \qquad \textbf{Eqn. 1}$$

where N is the number of output pins switching in a group M, C is the capacitance per pin, VDD_IO is the IO voltage swing, f is the switching frequency and PIOint is the power consumed by the unloaded IO stage. The total power consumption of the MPC5200B processor must not exceed the value, which would cause the maximum junction temperature to be exceeded.

$$P_{total} = P_{core} + P_{analog} + P_{IO} \qquad \textbf{Eqn. 2}$$

Downloaded from Arrow.com.

Table 6. Power Dissipation

Core Power Supply (VDD_CORE)					SpecID
Mode	SYS_XTAL/XLB/PCI/IPB/CORE (MHz)		Unit	Notes	
	33/66/33/33/264	33/132/66/132/396			
	Typ	Typ			
Operational	727.5	1080	mW	(1),(2)	D5.1
Doze	—	600	mW	(1),(3)	D5.2
Nap	—	225	mW	(1),(4)	D5.3
Sleep	—	225	mW	(1),(5)	D5.4
Deep-Sleep	52.5	52.5	mW	(1),(6)	D5.5
PLL Power Supplies (SYS_PLL_AVDD, CORE_PLL_AVDD)					
Mode	**Typ**		**Unit**	**Notes**	
Typical	2		mW	(7)	D5.6
Unloaded I/O Power Supplies (VDD_IO, VDD_MEM_IO[8])					
Mode	**Typ**		**Unit**	**Notes**	
Typical	33		mW	(9)	D5.7

1 Typical core power is measured at VDD_CORE = 1.5 V, Tj = 25 °C

2 Operational power is measured while running an entirely cache-resident program with floating-point multiplication instructions in parallel with a continuous PCI transaction via BestComm.

3 Doze power is measured with the e300 core in Doze mode, the system oscillator, System PLL and Core PLL are active, all other system modules are inactive

4 Nap power is measured with the e300 core in Nap mode, the system oscillator, System PLL and Core PLL are active, all other system modules are inactive

5 Sleep power is measured with the e300 core in Sleep mode, the system oscillator, System PLL and Core PLL are active, all other system modules are inactive

6 Deep-Sleep power is measured with the e300 core in Sleep mode, the system oscillator, System PLL, Core PLL and all other system modules are inactive

7 Typical PLL power is measured at SYS_PLL_AVDD = CORE_PLL_AVDD = 1.5 V, Tj = 25 °C

8 IO power figures given in the table represent the worst case scenario. For the VDD_MEM_IO rail connected to 2.5 V the IO power is expected to be lower and bounded by the worst case with VDD_MEM_IO connected to 3.3 V.

9 Unloaded typical I/O power is measured in Deep-Sleep mode at VDD_IO = $VDD_MEM_IO_{SDR}$= 3.3 V, Tj = 25 °C

Downloaded from Arrow.com.

1.1.6 Thermal Characteristics

Table 7. Thermal Resistance Data

Rating	Board Layers	Sym	Value	Unit	Notes	SpecID
Junction to Ambient Natural Convection	Single layer board (1s)	$R_{\theta JA}$	30	°C/W	(1),(2)	D6.1
Junction to Ambient Natural Convection	Four layer board (2s2p)	$R_{\theta JMA}$	22	°C/W	(1),(3)	D6.2
Junction to Ambient (@200 ft/min)	Single layer board (1s)	$R_{\theta JMA}$	24	°C/W	(1),(3)	D6.3
Junction to Ambient (@200 ft/min)	Four layer board (2s2p)	$R_{\theta JMA}$	19	°C/W	(1),(3)	D6.4
Junction to Board	—	$R_{\theta JB}$	14	°C/W	(4)	D6.5
Junction to Case	—	$R_{\theta JC}$	8	°C/W	(5)	D6.6
Junction to Package Top	Natural Convection	Ψ_{JT}	2	°C/W	(6)	D6.7

1 Junction temperature is a function of die size, on-chip power dissipation, package thermal resistance, mounting site (board) temperature, ambient temperature, air flow, power dissipation of other components on the board, and board thermal resistance.

2 Per SEMI G38-87 and JEDEC JESD51-2 with the single layer board horizontal.

3 Per JEDEC JESD51-6 with the board horizontal.

4 Thermal resistance between the die and the printed circuit board per JEDEC JESD51-8. Board temperature is measured on the top surface of the board near the package.

5 Thermal resistance between the die and the case top surface as measured by the cold plate method (MIL SPEC-883 Method 1012.1).

6 Thermal characterization parameter indicating the temperature difference between package top and the junction temperature per JEDEC JESD51-2. When Greek letters are not available, the thermal characterization parameter is written as Psi-JT.

1.1.6.1 Heat Dissipation

An estimation of the chip-junction temperature, T_J, can be obtained from the following equation:

$$T_J = T_A + (R_{\theta JA} \times P_D) \qquad \textit{Eqn. 3}$$

where:

T_A = ambient temperature for the package (°C)
$R_{\theta JA}$ = junction to ambient thermal resistance (°C/W)
P_D = power dissipation in package (W)

The junction to ambient thermal resistance is an industry standard value, which provides a quick and easy estimation of thermal performance. Unfortunately, there are two values in common usage: the value determined on a single layer board, and the value obtained on a board with two planes. For packages such as the PBGA, these values can be different by a factor of two. Which value is correct depends on the power dissipated by other components on the board. The value obtained on a single layer board is appropriate for the tightly packed printed circuit board. The value obtained on the board with the internal planes is usually appropriate if the board has low power dissipation and the components are well separated.

Historically, the thermal resistance has frequently been expressed as the sum of a junction to case thermal resistance and a case to ambient thermal resistance:

Downloaded from Arrow.com.

$$R_{\theta JA} = R_{\theta JC} + R_{\theta CA} \qquad \textit{Eqn. 4}$$

where:

$R_{\theta JA}$ = junction to ambient thermal resistance (°C/W)
$R_{\theta JC}$ = junction to case thermal resistance (°C/W)
$R_{\theta CA}$ = case to ambient thermal resistance (°C/W)

$R_{\theta JC}$ is device related and cannot be influenced by the user. The user controls the thermal environment to change the case to ambient thermal resistance, $R_{\theta CA}$. For instance, the user can change the air flow around the device, add a heat sink, change the mounting arrangement on printed circuit board, or change the thermal dissipation on the printed circuit board surrounding the device. This description is most useful for ceramic packages with heat sinks where some 90% of the heat flow is through the case to the heat sink to ambient. For most packages, a better model is required.

A more accurate thermal model can be constructed from the junction to board thermal resistance and the junction to case thermal resistance. The junction to case covers the situation where a heat sink is used or a substantial amount of heat is dissipated from the top of the package. The junction to board thermal resistance describes the thermal performance when most of the heat is conducted to the printed circuit board. This model can be used for hand estimations or for a computational fluid dynamics (CFD) thermal model.

To determine the junction temperature of the device in the application after prototypes are available, the Thermal Characterization Parameter (Ψ_{JT}) can be used to determine the junction temperature with a measurement of the temperature at the top center of the package case using the following equation:

$$T_J = T_T + (\Psi_{JT} \times P_D) \qquad \textit{Eqn. 5}$$

where:

T_T = thermocouple temperature on top of package (°C)
Ψ_{JT} = thermal characterization parameter (°C/W)
P_D = power dissipation in package (W)

The thermal characterization parameter is measured per JESD51-2 specification using a 40-gauge type T thermocouple epoxied to the top center of the package case. The thermocouple should be positioned, so that the thermocouple junction rests on the package. A small amount of epoxy is placed over the thermocouple junction and over approximately one mm of wire extending from the junction. The thermocouple wire is placed flat against the package case to avoid measurement errors caused by cooling effects of the thermocouple wire.

1.2 Oscillator and PLL Electrical Characteristics

The MPC5200B System requires a system-level clock input SYS_XTAL. This clock input may be driven directly from an external oscillator or with a crystal using the internal oscillator.

There is a separate oscillator for the independent Real-Time Clock (RTC) system.

The MPC5200B clock generation uses two phase locked loop (PLL) blocks.

- The system PLL (SYS_PLL) takes an external reference frequency and generates the internal system clock. The system clock frequency is determined by the external reference frequency and the settings of the SYS_PLL configuration.
- The e300 core PLL (CORE_PLL) generates a master clock for all of the CPU circuitry. The e300 core clock frequency is determined by the system clock frequency and the settings of the CORE_PLL configuration.

Downloaded from Arrow.com.

1.2.1 System Oscillator Electrical Characteristics

Table 8. System Oscillator Electrical Characteristics

Characteristic	Sym	Notes	Min	Typical	Max	Unit	SpecID
SYS_XTAL frequency	f_{sys_xtal}		15.6	33.3	35.0	MHz	O1.1
Oscillator start-up time	t_{up_osc}		—	—	10	ms	O1.2

1.2.2 RTC Oscillator Electrical Characteristics

Table 9. RTC Oscillator Electrical Characteristics

Characteristic	Sym	Notes	Min	Typical	Max	Unit	SpecID
RTC_XTAL frequency	f_{rtc_xtal}		—	32.768	—	kHz	O2.1

1.2.3 System PLL Electrical Characteristics

Table 10. System PLL Specifications

Characteristic	Sym	Notes	Min	Typical	Max	Unit	SpecID
SYS_XTAL frequency	f_{sys_xtal}	(1)	15.6	33.3	35.0	MHz	O3.1
SYS_XTAL cycle time	t_{sys_xtal}	(1)	66.6	30.0	28.5	ns	O3.2
SYS_XTAL clock input jitter	t_{jitter}	(2)	—	—	150	ps	O3.3
System VCO frequency	f_{VCOsys}	(1)	250	533	800	MHz	O3.4
System PLL relock time	t_{lock}	(3)	—	—	100	µs	O3.5

1 The SYS_XTAL frequency and PLL Configuration bits must be chosen such that the resulting system frequency, CPU (core) frequency, and PLL (VCO) frequency do not exceed their respective maximum or minimum operating frequencies.

2 This represents total input jitter—short term and long term combined—and is guaranteed by design. Two different types of jitter can exist on the input to CORE_SYSCLK, systemic and true random jitter. True random jitter is rejected. Systemic jitter is passed into and through the PLL to the internal clock circuitry.

3 Relock time is guaranteed by design and characterization. PLL-relock time is the maximum amount of time required for the PLL lock after a stable VDD and CORE_SYSCLKare reached during the power-on reset sequence. This specification also applies when the PLL has been disabled and subsequently re-enabled during sleep modes.

1.2.4 e300 Core PLL Electrical Characteristics

The internal clocking of the e300 core is generated from and synchronized to the system clock by means of a voltage-controlled core PLL.

Downloaded from Arrow.com.

Table 11. e300 PLL Specifications

Characteristic	Sym	Notes	Min	Typical	Max	Unit	SpecID
e300 frequency	f_{core}	(1)	50	—	550	MHz	O4.1
e300 cycle time	t_{core}	(1)	2.85	—	40.0	ns	O4.2
e300 VCO frequency	$f_{VCOcore}$	(1)	400	—	1200	MHz	O4.3
e300 input clock frequency	f_{XLB_CLK}	—	25	—	367	MHz	O4.4
e300 input clock cycle time	t_{XLB_CLK}	—	2.73	—	50.0	ns	O4.5
e300 input clock jitter	t_{jitter}	(2)	—	—	150	ps	O4.6
e300 PLL relock time	t_{lock}	(3)	—	—	100	µs	O4.7

1 The XLB_CLK frequency and e300 PLL Configuration bits must be chosen such that the resulting system frequencies, CPU (core) frequency, and e300 PLL (VCO) frequency do not exceed their respective maximum or minimum operating frequencies in Table 12.

2 This represents total input jitter—short term and long term combined—and is guaranteed by design. Two different types of jitter can exist on the input to CORE_SYSCLK, systemic and true random jitter. True random jitter is rejected. Systemic jitter is passed into and through the PLL to the internal clock circuitry.

3 Relock time is guaranteed by design and characterization. PLL-relock time is the maximum amount of time required for the PLL lock after a stable VDD and CORE_SYSCLK are reached during the power-on reset sequence. This specification also applies when the PLL has been disabled and subsequently re-enabled during sleep modes.

1.3 AC Electrical Characteristics

Hyperlinks to the indicated timing specification sections are provided below.

- AC Operating Frequency Data
- Clock AC Specifications
- Resets
- External Interrupts
- SDRAM
- PCI
- Local Plus Bus
- ATA
- Ethernet
- USB
- SPI
- MSCAN
- I^2C
- J1850
- PSC
- GPIOs and Timers
- IEEE 1149.1 (JTAG) AC Specifications

1.3.1 AC Test Timing Conditions:

Unless otherwise noted, all test conditions are as follows:

- TA = –40 to 85 ^oC
- Tj = –40 to 115 ^oC
- VDD_CORE = 1.42 to 1.58 V
  VDD_IO = 3.0 to 3.6 V

Downloaded from Arrow.com.

- Input conditions:
  All Inputs: tr, tf <= 1 ns
- Output Loading:
  All Outputs: 50 pF

1.3.2 AC Operating Frequency Data

Table 12 provides the operating frequency information for the MPC5200B.

Table 12. Clock Frequencies

		Min	Max	Units	SpecID
1	e300 Processor Core	—	400	MHz	A1.1
2	SDRAM Clock	—	133	MHz	A1.2
3	XL Bus Clock	—	133	MHz	A1.3
4	IP Bus Clock	—	133	MHz	A1.4
5	PCI / Local Plus Bus Clock	—	66	MHz	A1.5
6	PLL Input Range	15.6	35	MHz	A1.6

1.3.3 Clock AC Specifications

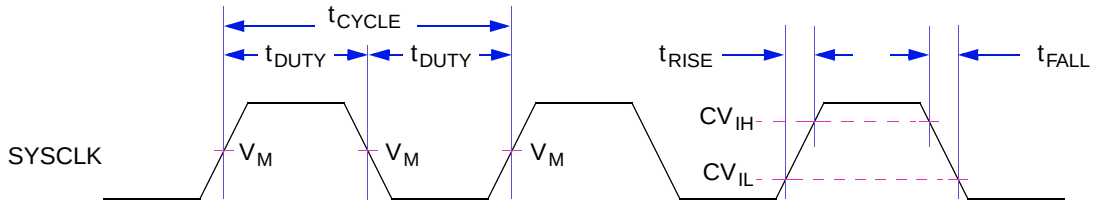

Figure 2. Timing Diagram—SYS_XTAL_IN

Table 13. SYS_XTAL_IN Timing

Sym	Description	Min	Max	Units	SpecID
t_{CYCLE}	SYS_XTAL_IN cycle time.[1]	28.6	64.1	ns	A2.1
t_{RISE}	SYS_XTAL_IN rise time.	—	5.0	ns	A2.2
t_{FALL}	SYS_XTAL_IN fall time.	—	5.0	ns	A2.3
t_{DUTY}	SYS_XTAL_IN duty cycle (measured at V_M).[2]	40.0	60.0	%	A2.4
CV_{IH}	SYS_XTAL_IN input voltage high	2.0	—	V	A2.5
CV_{IL}	SYS_XTAL_IN input voltage low	—	0.8	V	A2.6

1 **CAUTION**—The SYS_XTAL_IN frequency and system PLL_CFG[0–6] settings must be chosen such that the resulting system frequencies do not exceed their respective maximum or minimum operating frequencies. See the *MPC5200B User's Manual (MPC5200BUM)*.

2 SYS_XTAL_IN duty cycle is measured at V_M.

Downloaded from Arrow.com.

1.3.4 Resets

The MPC5200B has three reset pins:

- $\overline{\text{PORRESET}}$—Power on Reset
- $\overline{\text{HRESET}}$—Hard Reset
- $\overline{\text{SRESET}}$—Software Reset

These signals are asynchronous I/O signals and can be asserted at any time. The input side uses a Schmitt trigger and requires the same input characteristics as other MPC5200B inputs, as specified in the DC Electrical Specifications section. Table 14 specifies the pulse widths of the Reset inputs.

Table 14. Reset Pulse Width

Name	Description	Min Pulse Width	Max Pulse Width	Reference Clock	SpecID
$\overline{\text{PORRESET}}$	Power On Reset	$t_{VDD_stable} + t_{up_osc} + t_{lock}$	—	SYS_XTAL_IN	A3.1
$\overline{\text{HRESET}}$	Hardware Reset	4 clock cycles	—	SYS_XTAL_IN	A3.2
$\overline{\text{SRESET}}$	Software Reset	4 clock cycles	—	SYS_XTAL_IN	A3.3

For $\overline{\text{PORRESET}}$ the value of the minimum pulse width reflects the power on sequence. If $\overline{\text{PORRESET}}$ is asserted afterwards its minimum pulse width equals the minimum given for $\overline{\text{HRESET}}$ related to the same reference clock.

The t_{VDD_stable} describes the time which is needed to get all power supplies stable.

For t_{lock}, refer to the Oscillator/PLL section of this specification for further details.

For t_{up_osc}, refer to the Oscillator/PLL section of this specification for further details.

Following the deassertion of $\overline{\text{PORRESET}}$, $\overline{\text{HRESET}}$ and $\overline{\text{SRESET}}$ remain low for 4096 reference clock cycles.

The deassertion of $\overline{\text{HRESET}}$ for at least the minimum pulse width forces the internal resets to be active for an additional 4096 clock cycles.

NOTE

As long as VDD is not stable the $\overline{\text{HRESET}}$ output is not stable.

Table 15. Reset Rise/Fall Timing

Description	Min	Max	Unit	SpecID
$\overline{\text{PORRESET}}$ fall time	—	1	ms	A3.4
$\overline{\text{PORRESET}}$ rise time	—	1	ms	A3.5
$\overline{\text{HRESET}}$ fall time	—	1	ms	A3.6
$\overline{\text{HRESET}}$ rise time	—	1	ms	A3.7
$\overline{\text{SRESET}}$ fall time	—	1	ms	A3.8
$\overline{\text{SRESET}}$ rise time	—	1	ms	A3.9

NOTE

Make sure that the $\overline{\text{PORRESET}}$ does not carry any glitches. The MPC5200B has no filter to prevent them from getting into the chip. $\overline{\text{HRESET}}$ and $\overline{\text{SRESET}}$ must have a monotonous rise time. The assertion of $\overline{\text{HRESET}}$ becomes active at Power on Reset without any SYS_XTAL clock.

Downloaded from Arrow.com.

For additional information, see the *MPC5200B User's Manual (MPC5200BUM)*.

1.3.4.1 Reset Configuration Word

During reset ($\overline{\text{HRESET}}$ and $\overline{\text{PORRESET}}$) the Reset Configuration Word is latched in the related Reset Configuration Word Register with each rising edge of the SYS_XTAL signal. If both resets ($\overline{\text{HRESET}}$ and $\overline{\text{PORRESET}}$) are inactive (high), the contents of this register are locked immediately with the SYS_XTAL clock (see Figure 3).

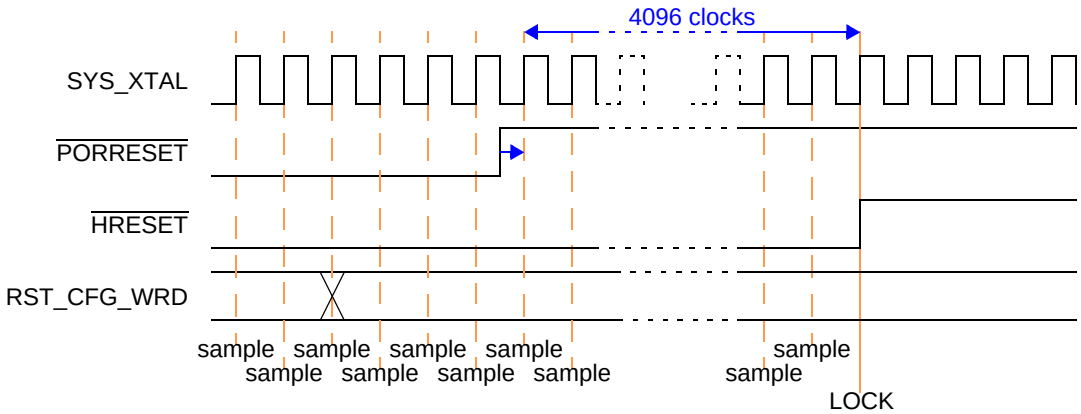

Figure 3. Reset Configuration Word Locking

NOTE

Beware of changing the values on the pins of the reset configuration word after the deassertion of $\overline{\text{PORRESET}}$. This may cause problems because it may change the internal clock ratios and so extend the PLL locking process.

1.3.5 External Interrupts

The MPC5200B provides three different kinds of external interrupts:

- Four IRQ interrupts
- Eight GPIO interrupts with simple interrupt capability (not available in power-down mode)
- Eight WakeUp interrupts (special GPIO pins)

The propagation of these three kinds of interrupts to the core is shown in the following graphic:

Downloaded from Arrow.com.

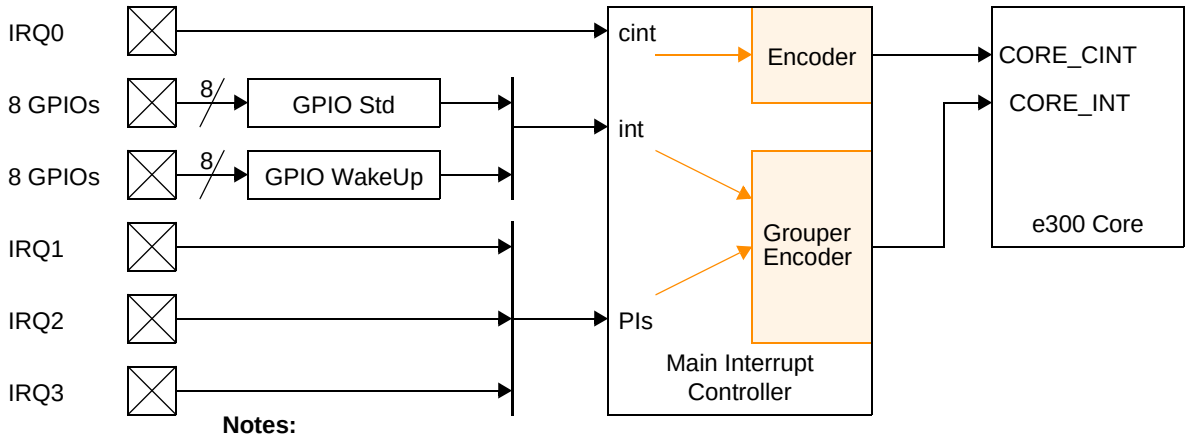

Notes:
1. PIs = Programmable Inputs
2. Grouper and Encoder functions imply programmability in software

Figure 4. External Interrupt Scheme

Due to synchronization, prioritization, and mapping of external interrupt sources, the propagation of external interrupts to the core processor is delayed by several IP_CLK clock cycles. The following table specifies the interrupt latencies in IP_CLK cycles. The IP_CLK frequency is programmable in the Clock Distribution Module (see Table 16).

Table 16. External Interrupt Latencies

Interrupt Type	Pin Name	Clock Cycles	Reference Clock	Core Interrupt	SpecID
Interrupt Requests	IRQ0	10	IP_CLK	critical (cint)	A4.1
	IRQ0	10	IP_CLK	normal (int)	A4.2
	IRQ1	10	IP_CLK	normal (int)	A4.3
	IRQ2	10	IP_CLK	normal (int)	A4.4
	IRQ3	10	IP_CLK	normal (int)	A4.5
Standard GPIO Interrupts	GPIO_PSC3_4	12	IP_CLK	normal (int)	A4.6
	GPIO_PSC3_5	12	IP_CLK	normal (int)	A4.7
	GPIO_PSC3_8	12	IP_CLK	normal (int)	A4.8
	GPIO_USB_9	12	IP_CLK	normal (int)	A4.9
	GPIO_ETHI_4	12	IP_CLK	normal (int)	A4.10
	GPIO_ETHI_5	12	IP_CLK	normal (int)	A4.11
	GPIO_ETHI_6	12	IP_CLK	normal (int)	A4.12
	GPIO_ETHI_7	12	IP_CLK	normal (int)	A4.13
GPIO WakeUp Interrupts	GPIO_PSC1_4	12	IP_CLK	normal (int)	A4.15
	GPIO_PSC2_4	12	IP_CLK	normal (int)	A4.16
	GPIO_PSC3_9	12	IP_CLK	normal (int)	A4.17
	GPIO_ETHI_8	12	IP_CLK	normal (int)	A4.18
	GPIO_IRDA_0	12	IP_CLK	normal (int)	A4.19
	DGP_IN0	12	IP_CLK	normal (int)	A4.20
	DGP_IN1	12	IP_CLK	normal (int)	A4.21

NOTES:
1) The frequency of IP_CLK depends on register settings in Clock Distribution Module. See the *MPC5200B User's Manual*.

Downloaded from Arrow.com.

2) The interrupt latency descriptions in the table above are related to non competitive, non masked but enabled external interrupt sources. Take care of interrupt prioritization which may increase the latencies.

Because all external interrupt signals are synchronized into the internal processor bus clock domain, each of these signals has to exceed a minimum pulse width of more than one IP_CLK cycle.

Table 17. Minimum Pulse Width for External Interrupts to be Recognized

Name	Min Pulse Width	Max Pulse Width	Reference Clock	SpecID
All external interrupts (IRQs, GPIOs)	> 1 clock cycle	—	IP_CLK	A4.22

NOTES:

1) The frequency of the IP_CLK depends on the register settings in Clock Distribution Module. See the *MPC5200B User's Manual (MPC5200BUM)* for further information.

2) If the same interrupt occurs a second time while its interrupt service routine has not cleared the former one, the second interrupt is not recognized at all.

Besides synchronization, prioritization, and mapping the latency of an external interrupt to the start of its associated interrupt service routine also depends on the following conditions: To get a minimum interrupt service response time, it is recommended to enable the instruction cache and set up the maximum core clock, XL bus, and IP bus frequencies (depending on board design and programming). In addition, it is advisable to execute an interrupt handler, which has been implemented in assembly code.

1.3.6 SDRAM

1.3.6.1 Memory Interface Timing-Standard SDRAM Read Command

Table 18. Standard SDRAM Memory Read Timing

Sym	Description	Min	Max	Units	SpecID
t_{mem_clk}	MEM_CLK period	7.5	—	ns	A5.1
t_{valid}	Control Signals, Address and MBA Valid after rising edge of MEM_CLK	—	$t_{mem_clk} \times 0.5 + 0.4$	ns	A5.2
t_{hold}	Control Signals, Address and MBA Hold after rising edge of MEM_CLK	$t_{mem_clk} \times 0.5$	—	ns	A5.3
DM_{valid}	DQM valid after rising edge of MEM_CLK	—	$t_{mem_clk} \times 0.25 + 0.4$	ns	A5.4
DM_{hold}	DQM hold after rising edge of MEM_CLK	$t_{mem_clk} \times 0.25 – 0.7$	—	ns	A5.5
$data_{setup}$	MDQ setup to rising edge of MEM_CLK	—	0.3	ns	A5.6
$data_{hold}$	MDQ hold after rising edge of MEM_CLK	0.2	—	ns	A5.7

Downloaded from Arrow.com.

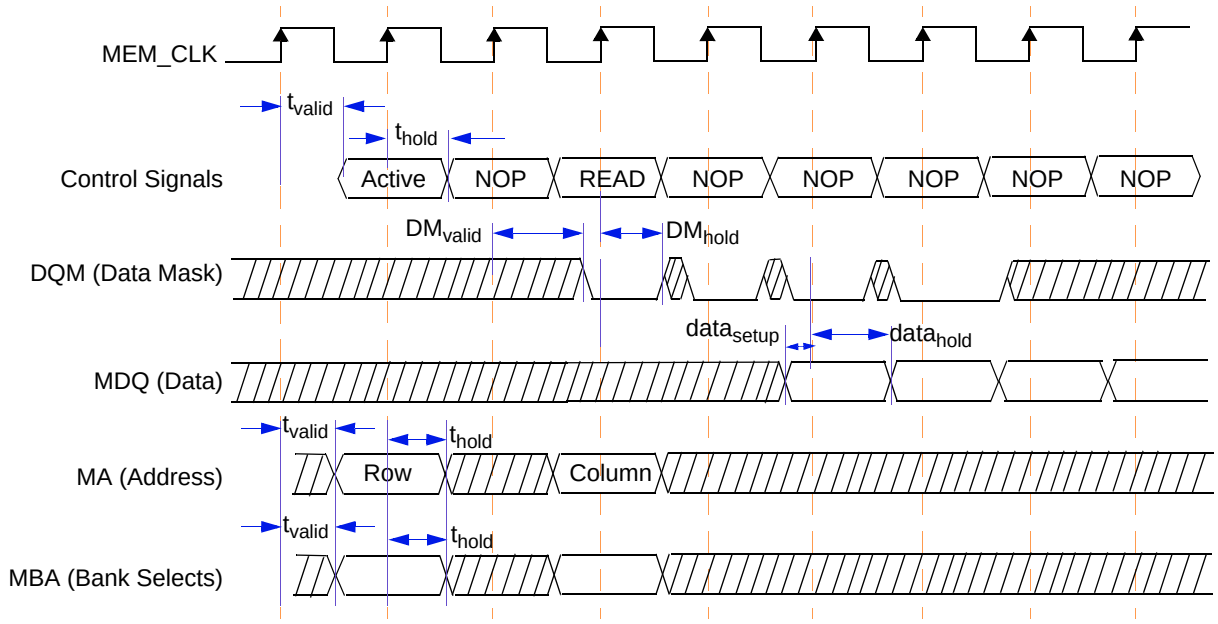

NOTE: Control Signals are composed of RAS, CAS, $\overline{\text{MEM_WE}}$, $\overline{\text{MEM_CS}}$, $\overline{\text{MEM_CS1}}$ and CLK_EN

Figure 5. Timing Diagram—Standard SDRAM Memory Read Timing

1.3.6.2 Memory Interface Timing-Standard SDRAM Write Command

In Standard SDRAM, all signals are activated on the MEM_CLK from the Memory Controller and captured on the MEM_CLK clock at the memory device.

Table 19. Standard SDRAM Write Timing

Sym	Description	Min	Max	Units	SpecID
t_{mem_clk}	MEM_CLK period	7.5	—	ns	A5.8
t_{valid}	Control Signals, Address and MBA Valid after rising edge of MEM_CLK	—	$t_{mem_clk} \times 0.5 + 0.4$	ns	A5.9
t_{hold}	Control Signals, Address and MBA Hold after rising edge of MEM_CLK	$t_{mem_clk} \times 0.5$	—	ns	A5.10
DM_{valid}	DQM valid after rising edge of MEM_CLK	—	$t_{mem_clk} \times 0.25 + 0.4$	ns	A5.11
DM_{hold}	DQM hold after rising edge of Mem_clk	$t_{mem_clk} \times 0.25 – 0.7$	—	ns	A5.12
$data_{valid}$	MDQ valid after rising edge of MEM_CLK	—	$t_{mem_clk} \times 0.75 + 0.4$	ns	A5.13
$data_{hold}$	MDQ hold after rising edge of MEM_CLK	$t_{mem_clk} \times 0.75 – 0.7$	—	ns	A5.14

Downloaded from Arrow.com.

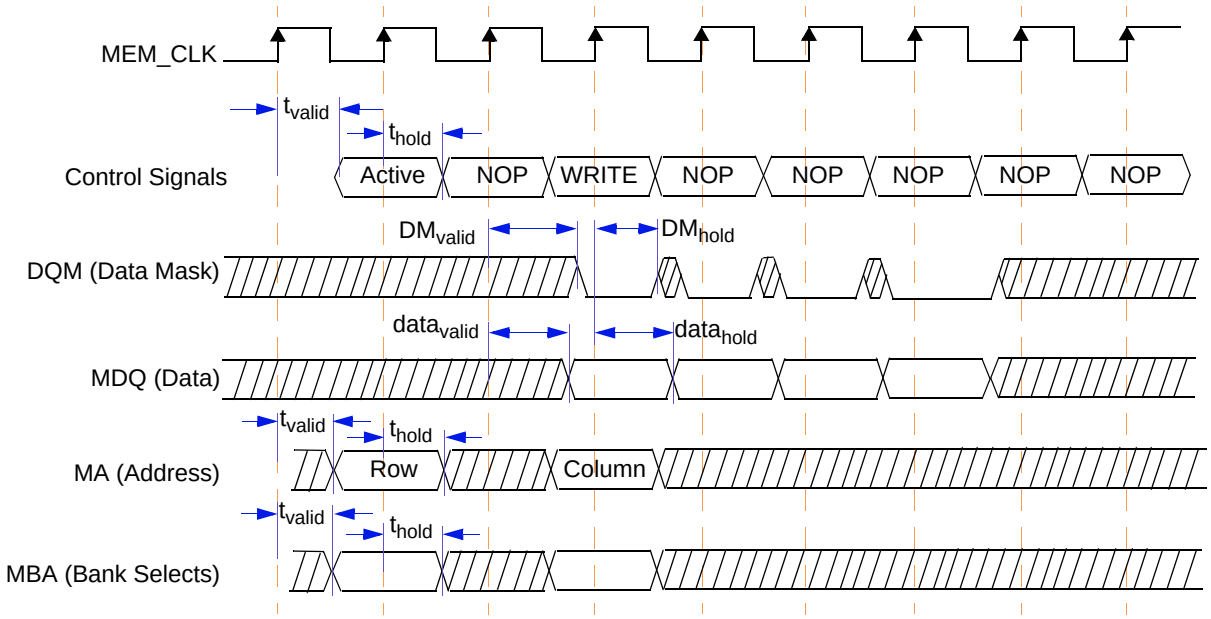

NOTE: Control Signals are composed of RAS, CAS, $\overline{\text{MEM_WE}}$, $\overline{\text{MEM_CS}}$, $\overline{\text{MEM_CS1}}$ and CLK_EN

Figure 6. Timing Diagram—Standard SDRAM Memory Write Timing

1.3.6.3 Memory Interface Timing-DDR SDRAM Read Command

The SDRAM Memory Controller uses a 1/4 period delayed MDQS strobe to capture the MDQ data. The 1/4 period delay value is calculated automatically by hardware.

Table 20. DDR SDRAM Memory Read Timing

Sym	Description	Min	Max	Units	SpecID
t_{mem_clk}	MEM_CLK period	7.5	—	ns	A5.15
t_{valid}	Control Signals, Address and MBA valid after rising edge of MEM_CLK	—	$t_{mem_clk} \times 0.5 + 0.4$	ns	A5.16
t_{hold}	Control Signals, Address and MBA hold after rising edge of MEM_CLK	$t_{mem_clk} \times 0.5$	—	ns	A5.17
$data_{setup}$	Setup time relative to MDQS	—	0.4	ns	A5.18
$data_{hold}$	Hold time relative to MDQS	2.6	—	ns	A5.19

Downloaded from Arrow.com.

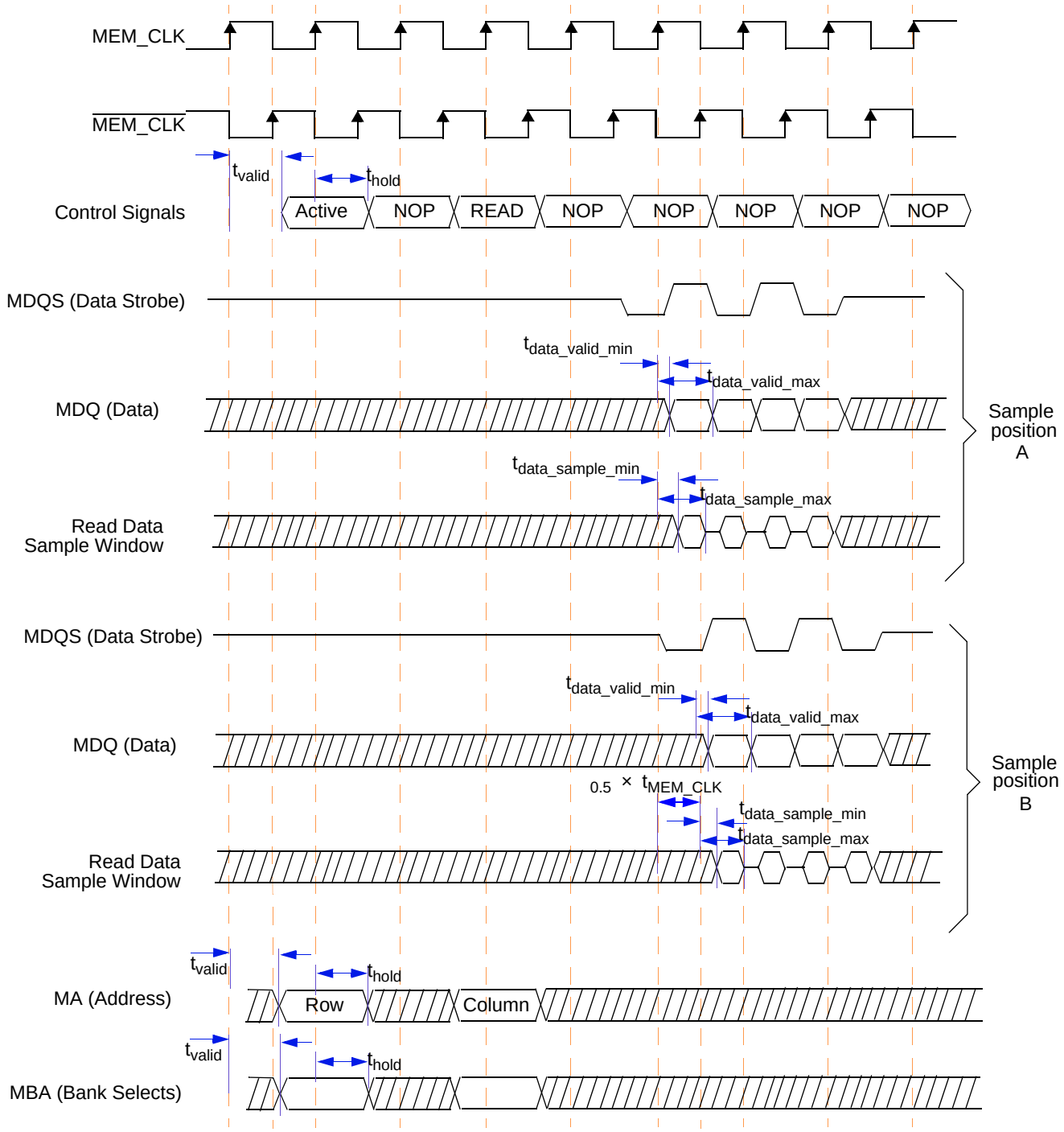

Sample position A: data are sampled on the expected edge of MEM_CLK, the MDQS signal indicate the valid data

Sample position B: data are sampled on a later edge of MEM_CLK, SDRAM controller is waiting for the valid MDQS signal

NOTE: Control Signals signals are composed of RAS, CAS, $\overline{\text{MEM_WE}}$, $\overline{\text{MEM_CS}}$, $\overline{\text{MEM_CS1}}$ and CLK_EN

Figure 7. Timing Diagram—DDR SDRAM Memory Read Timing

Downloaded from Arrow.com.

1.3.6.4 Memory Interface Timing-DDR SDRAM Write Command

Table 21. DDR SDRAM Memory Write Timing

Sym	Description	Min	Max	Units	SpecID
t_{mem_clk}	MEM_CLK period	7.5	—	ns	A5.20
t_{DQSS}	Delay from write command to first rising edge of MDQS	—	t_{mem_clk} + 0.4	ns	A5.21
$data_{valid}$	MDQ valid before rising edge of MDQS	1.0	—	ns	A5.22
$data_{hold}$	MDQ valid after rising edge of MDQS	1.0	—	ns	A5.23

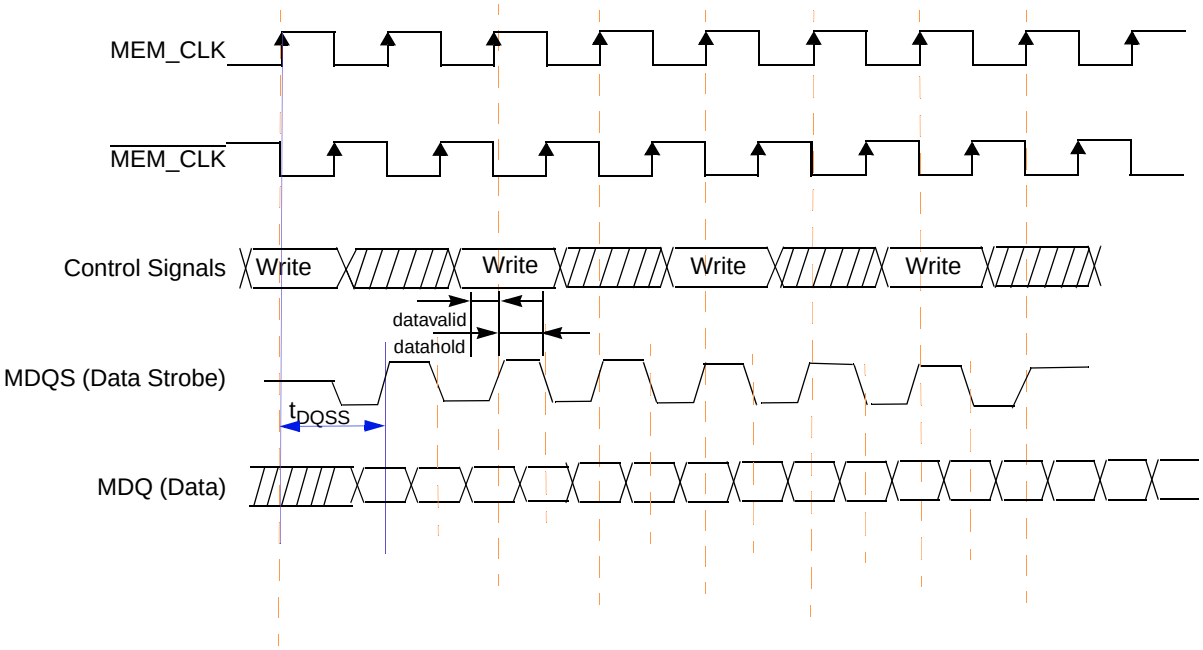

NOTE: Control Signals signals are composed of RAS, CAS, $\overline{\text{MEM_WE}}$, $\overline{\text{MEM_CS}}$, $\overline{\text{MEM_CS1}}$, and CLK_EN

Figure 8. DDR SDRAM Memory Write Timing

1.3.7 PCI

The PCI interface on the MPC5200B is designed to PCI Version 2.2 and supports 33 MHz and 66 MHz PCI operations. See the PCI Local Bus Specification; the component section specifies the electrical and timing parameters for PCI components with the intent that components connect directly together whether on the planar or an expansion board, without any external buffers or other “glue logic.” Parameters apply at the package pins, not at expansion board edge connectors.

The MPC5200B is always the source of the PCI CLK. The clock waveform must be delivered to each 33 MHz or 66 MHz PCI component in the system. Figure 9 shows the clock waveform and required measurement points for 3.3 V signaling environments. Table 22 summarizes the clock specifications.

Downloaded from Arrow.com.

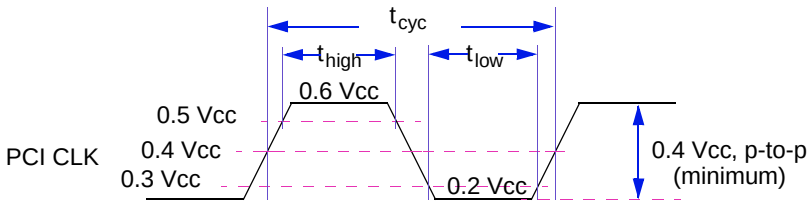

Figure 9. PCI CLK Waveform

Table 22. PCI CLK Specifications

Sym	Description	66 MHz		33 MHz		Units	Notes	SpecID
		Min	Max	Min	Max			
t_{cyc}	PCI CLK Cycle Time	15	30	30	—	ns	(1),(3)	A6.1
t_{high}	PCI CLK High Time	6	—	11	—	ns	—	A6.2
t_{low}	PCI CLK Low Time	6	—	11	—	ns	—	A6.3
—	PCI CLK Slew Rate	1.5	4	1	4	V/ns	(2)	A6.4
—	PCI Clock Jitter (peak to peak)	—	200	—	200	ps	—	—

NOTES:

1. In general, all 66 MHz PCI components must work with any clock frequency up to 66 MHz. CLK requirements vary depending upon whether the clock frequency is above 33 MHz.
2. Rise and fall times are specified in terms of the edge rate measured in V/ns. This slew rate must be met across the minimum peak-to-peak portion of the clock waveform as shown in Figure 9.
3. The minimum clock period must not be violated for any single clock cycle, i.e., accounting for all system jitter.

Table 23. PCI Timing Parameters

Sym	Description	66 MHz		33 MHz		Units	Notes	SpecID
		Min	Max	Min	Max			
t_{val}	CLK to Signal Valid Delay — bused signals	2	6	2	11	ns	(1),(2),(3)	A6.5
t_{val}(ptp)	CLK to Signal Valid Delay — point to point	2	6	2	12	ns	(1),(2),(3)	A6.6
t_{on}	Float to Active Delay	2	—	2	—	ns	(1)	A6.7
t_{off}	Active to Float Delay		14		28	ns	(1)	A6.8
t_{su}	Input Setup Time to CLK — bused signals	3	—	7	—	ns	(3),(4)	A6.9
t_{su}(ptp)	Input Setup Time to CLK — point to point	5	—	10,12	—	ns	(3),(4)	A6.10
t_h	Input Hold Time from CLK	0	—	0	—	ns	(4)	A6.11

NOTES:

1. See the timing measurement conditions in the PCI Local Bus Specification. It is important that all driven signal transitions drive to their Voh or Vol level within one Tcyc.

Downloaded from Arrow.com.

2. Minimum times are measured at the package pin with the load circuit, and maximum times are measured with the load circuit as shown in the PCI Local Bus Specification.
3. REQ# and GNT# are point-to-point signals and have different input setup times than do bused signals. GNT# and REQ# have a setup of 5 ns at 66 MHz. All other signals are bused.
4. See the timing measurement conditions in the PCI Local Bus Specification.

For Measurement and Test Conditions, see the PCI Local Bus Specification.

1.3.8 Local Plus Bus

The Local Plus Bus is the external bus interface of the MPC5200B. A maximum of eight configurable chip selects (CS) are provided. There are two main modes of operation: non-MUXed (Legacy and Burst) and MUXED. The reference clock is the PCI CLK. The maximum bus frequency is 66 MHz.

Definition of Acronyms and Terms:

- WS = Wait State
- DC = Dead Cycle
- LB = Long Burst
- DS = Data Size in Bytes
- t_{PCIck} = PCI clock period
- t_{IPBIck} = IPBI clock period

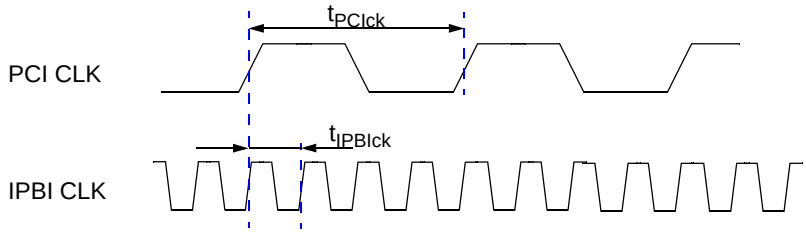

Figure 10. Timing Diagram—IPBI and PCI clock (example ratio: 4:1)

1.3.8.1 Non-MUXed Mode

Table 24. Non-MUXed Mode Timing

Sym	Description	Min	Max	Units	Notes	SpecID
t_{CSA}	PCI CLK to CS assertion	4.6	10.6	ns	—	A7.1
t_{CSN}	PCI CLK to CS negation	2.9	7.0	ns	—	A7.2
t_1	CS pulse width	(2 + WS) × t_{PCIck}	(2 + WS) × t_{PCIck}	ns	(1)	A7.3
t_2	ADDR valid before CS assertion	t_{IPBIck}	t_{PCIck}	ns	—	A7.4
t_3	ADDR hold after CS negation	t_{IPBIck}	—	ns	(2)	A7.5
t_4	OE assertion before CS assertion	—	4.8	ns	—	A7.6
t_5	OE negation before CS negation	—	2.7	ns	—	A7.7
t_6	RW valid before CS assertion	t_{PCIck}	—	ns	—	A7.8
t_7	RW hold after CS negation	t_{IPBIck}	—	ns	—	A7.9
t_8	DATA output valid before CS assertion	t_{IPBIck}	—	ns	—	A7.10
t_9	DATA output hold after CS negation	t_{IPBIck}	—	ns	—	A7.11

Downloaded from Arrow.com.

Table 24. Non-MUXed Mode Timing (continued)

Sym	Description	Min	Max	Units	Notes	SpecID
t_{10}	DATA input setup before CS negation	8.5	—	ns	—	A7.12
t_{11}	DATA input hold after CS negation	0	(DC + 1) × t_{PCIck}	ns	(6)	A7.13
t_{12}	ACK assertion after CS assertion	t_{PCIck}	—	ns	(3)	A7.14
t_{13}	ACK negation after CS negation	—	t_{PCIck}	ns	(3)	A7.15
t_{14}	TS assertion before CS assertion	—	6.9	ns	(4)	A7.16
t_{15}	TS pulse width	t_{PCIck}	t_{PCIck}	ns	(4)	A7.17
t_{16}	TSIZ valid before CS assertion	t_{IPBIck}	—	ns	(5)	A7.18
t_{17}	TSIZ hold after CS negation	t_{IPBIck}	—	ns	(5)	A7.19
t_{18}	ACK change before PCI clock	—	2.0	ns	(1)	A7.20
t_{19}	ACK change after PCI clock	—	4.4	ns	(1)	A7.21

NOTES:

1. ACK can shorten the CS pulse width.
   Wait States (WS) can be programmed in the Chip Select X Register, Bit field WaitP and WaitX. It can be specified from 0–65535.
2. In Large Flash and MOST Graphics mode the shared PCI/ATA pins, used as address lines, are released at the same moment as the CS. This can cause the address to change before CS is deasserted.
3. ACK is input and can be used to shorten the CS pulse width.
4. Only available in Large Flash and MOST Graphics mode.
5. Only available in MOST Graphics mode.
6. Deadcycles are only used, if no arbitration to an other module (ATA or PCI) of the shared local bus happens. If arbitration happens the bus can be driven within 4 IPB clocks by an other modules.

Downloaded from Arrow.com.

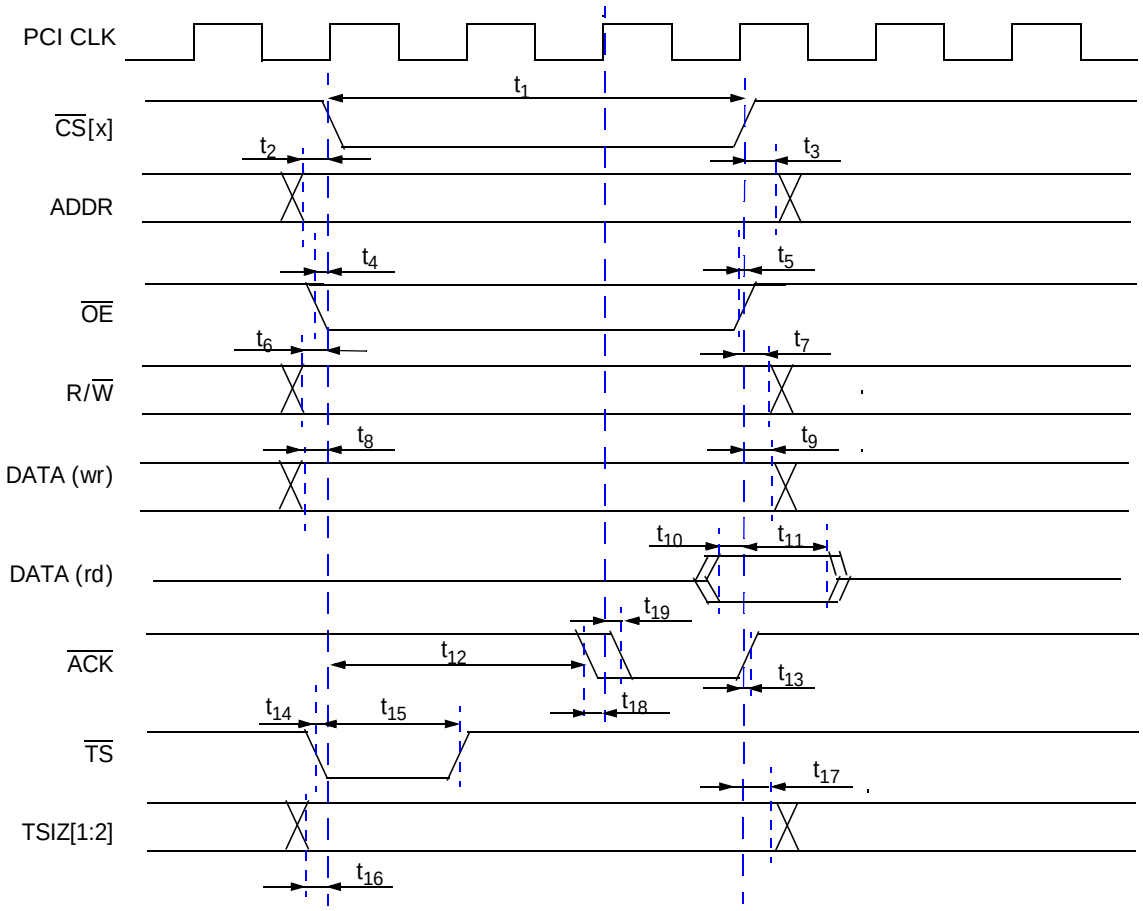

Figure 11. Timing Diagram—Non-MUXed Mode

1.3.8.2 Burst Mode

Table 25. Burst Mode Timing

Sym	Description	Min	Max	Units	Notes	SpecID
t_{CSA}	PCI CLK to CS assertion	4.6	10.6	ns	—	A7.22
t_{CSN}	PCI CLK to CS negation	2.9	7.0	ns	—	A7.23
t_1	CS pulse width	$(1 + WS + 4^{LB} \times 2 \times (32/DS)) \times t_{PClck}$	$(1 + WS + 4^{LB} \times 2 \times (32/DS)) \times t_{PClck}$	ns	(1),(2)	A7.24
t_2	ADDR valid before CS assertion	t_{IPBIck}	t_{PClck}	ns	—	A7.25
t_3	ADDR hold after CS negation	–0.7	—	ns	—	A7.26
t_4	OE assertion before CS assertion	—	4.8	ns	—	A7.27
t_5	OE negation before CS negation	—	2.7	ns	—	A7.28
t_6	RW valid before CS assertion	t_{PClck}	—	ns	—	A7.29
t_7	RW hold after CS negation	t_{PClck}	—	ns	—	A7.30
t_8	DATA setup before rising edge of PCI clock	3.6	—	ns	—	A7.31

Downloaded from Arrow.com.

Table 25. Burst Mode Timing (continued)

Sym	Description	Min	Max	Units	Notes	SpecID
t_9	DATA hold after rising edge of PCI clock	0	—	ns	—	A7.32
t_{10}	DATA hold after CS negation	0	(DC + 1) × t_{PClck}	ns	(4)	A7.33
t_{11}	ACK assertion after CS assertion	—	(WS + 1) × t_{PClck}	ns	—	A7.34
t_{12}	ACK negation before CS negation	—	7.0	ns	(3)	A7.35
t_{13}	ACK pulse width	4^{LB} × 2 × (32/DS) × t_{PClck}	4^{LB} × 2 × (32/DS) × t_{PClck}	ns	(2),(3)	A7.36
t_{14}	CS assertion after TS assertion	—	2.5	ns	—	A7.37
t_{15}	TS pulse width	t_{PClck}	t_{PClck}	ns	—	A7.38

NOTES:

1. Wait States (WS) can be programmed in the Chip Select X Register, Bit field WaitP and WaitX. It can be specified from 0–65535.
2. Example:
   Long Burst is used, this means the CS related BERx and SLB bits of the Chip Select Burst Control Register are set and a burst on the internal XLB is executed. => LB = 1
   Data bus width is 8 bit. => DS = 8
   => 4^1 × 2 × (32/8) = 32 => ACK is asserted for 32 PCI cycles to transfer one cache line.
   Wait State is set to 10. => WS = 10
   1 + 10 + 32 = 43 => CS is asserted for 43 PCI cycles.
3. ACK is output and indicates the burst.
4. Deadcycles are only used, if no arbitration to an other module (ATA or PCI) of the shared local bus happens. If arbitration happens the bus can be driven within 4 IPB clocks by an other modules.

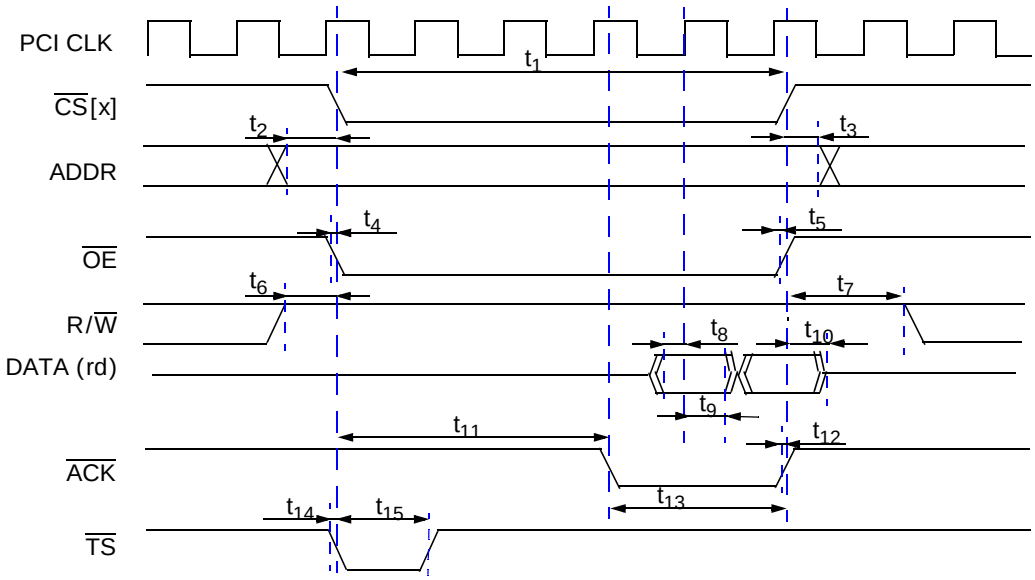

Figure 12. Timing Diagram—Burst Mode

Downloaded from Arrow.com.

1.3.8.3 MUXed Mode

Table 26. MUXed Mode Timing

Sym	Description	Min	Max	Units	Notes	SpecID
t_{CSA}	PCI CLK to CS assertion	4.6	10.6	ns	—	A7.39
t_{CSN}	PCI CLK to CS negation	2.9	7.0	ns	—	A7.40
t_{ALEA}	PCI CLK to ALE assertion	—	3.6	ns	—	A7.41
t_1	ALE assertion before Address, Bank, TSIZ assertion	—	5.7	ns	—	A7.42
t_2	CS assertion before Address, Bank, TSIZ negation	—	–1.2	ns	—	A7.43
t_3	CS assertion before Data wr valid	—	–1.2	ns	—	A7.44
t_4	Data wr hold after CS negation	t_{IPBIck}	—	ns	—	A7.45
t_5	Data rd setup before CS negation	8.5	—	ns	—	A7.46
t_6	Data rd hold after CS negation	0	(DC + 1) × t_{PCIck}	ns	(1),(3)	A7.47
t_7	ALE pulse width	—	t_{PCIck}	ns	—	A7.48
t_{TSA}	CS assertion after TS assertion	—	6.9	ns	—	A7.49
t_8	TS pulse width	—	t_{PCIck}	ns	—	A7.50
t_9	CS pulse width	(2 + WS) × t_{PCIck}	(2 + WS) × t_{PCIck}	ns	—	A7.51
t_{OEA}	OE assertion before CS assertion	—	4.7	ns	—	A7.52
t_{OEN}	OE negation before CS negation	—	5.9	ns	—	A7.53
t_{10}	RW assertion before ALE assertion	t_{IPBIck}	—	ns	—	A7.54
t_{11}	RW negation after CS negation	—	t_{PCIck}	ns	—	A7.55
t_{12}	ACK assertion after CS assertion	t_{IPBIck}	—	ns	(2)	A7.56
t_{13}	ACK negation after CS negation	—	t_{PCIck}	ns	(2)	A7.57
t_{14}	ALE negation to CS assertion	—	t_{PCIck}	ns		A7.58
t_{15}	ACK change before PCI clock	—	2.0	ns	(2)	A7.59
t_{16}	ACK change after PCI clock	—	4.4	ns	(2)	A7.60

NOTES:

1. ACK can shorten the CS pulse width.
   Wait States (WS) can be programmed in the Chip Select X Register, Bit field WaitP and WaitX. It can be specified from 0–65535.
2. ACK is input and can be used to shorten the CS pulse width.
3. Deadcycles are only used, if no arbitration to an other module (ATA or PCI) of the shared local bus happens. If arbitration happens the bus can be driven within 4 IPB clocks by an other modules.

Downloaded from Arrow.com.

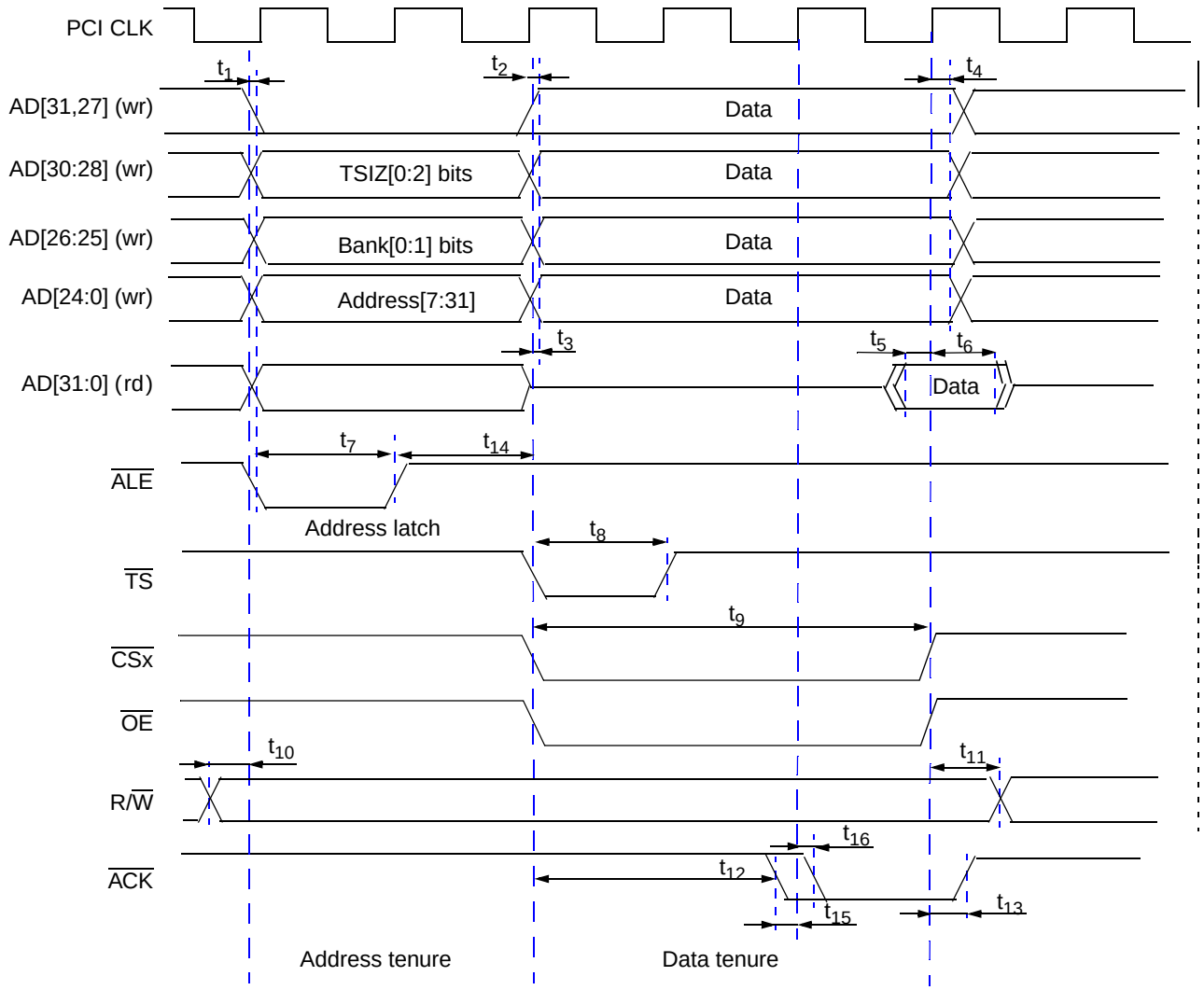

Figure 13. Timing Diagram—MUXed Mode

1.3.9 ATA

The MPC5200B ATA Controller is completely software programmable. It can be programmed to operate with ATA protocols using their respective timing, as described in the ANSI ATA-4 specification. The ATA interface is completely asynchronous in nature. Signal relationships are based on specific fixed timing in terms of timing units (nanoseconds).

ATA data setup and hold times, with respect to Read/Write strobes, are software programmable inside the ATA Controller. Data setup and hold times are implemented using counters. The counters count the number of ATA clock cycles needed to meet the ANSI ATA-4 timing specifications. For details, see the ANSI ATA-4 specification and how to program an ATA Controller and ATA drive for different ATA protocols and their respective timing. See the *MPC5200B User's Manual (MPC5200BUM)*.

The MPC5200B ATA Host Controller design makes data available coincidentally with the active edge of the WRITE strobe in PIO and Multiword DMA modes.

- Write data is latched by the drive at the inactive edge of the WRITE strobe. This gives ample setup time beyond that required by the ATA-4 specification.
- Data is held unchanged until the next active edge of the WRITE strobe. This gives ample hold time beyond that required by the ATA-4 specification.

Downloaded from Arrow.com.

All ATA transfers are programmed in terms of system clock cycles (IP bus clocks) in the ATA Host Controller timing registers. This puts constraints on the ATA protocols and their respective timing modes in which the ATA Controller can communicate with the drive.

Faster ATA modes (i.e., UDMA 0, 1, 2) are supported when the system is running at a sufficient frequency to provide adequate data transfer rates. Adequate data transfer rates are a function of the following:

- The MPC5200B operating frequency (IP bus clock frequency)
- Internal MPC5200B bus latencies
- Other system load dependent variables

The ATA clock is the same frequency as the IP bus clock in MPC5200B. See the *MPC5200B User's Manual (MPC5200B)*.

NOTE

All output timing numbers are specified for nominal 50 pF loads.

Table 27. PIO Mode Timing Specifications

Sym	PIO Timing Parameter	Min/Max (ns)	Mode 0 (ns)	Mode 1 (ns)	Mode 2 (ns)	Mode 3 (ns)	Mode 4 (ns)	SpecID
t_0	Cycle Time	min	600	383	240	180	120	A8.1
t_1	Address valid to $\overline{DIOR}$/$\overline{DIOW}$ setup	min	70	50	30	30	25	A8.2
t_2	$\overline{DIOR}$/$\overline{DIOW}$ pulse width 16-bit 8-bit	min min	165 290	125 290	100 290	80 80	70 70	A8.3
t_{2i}	$\overline{DIOR}$/$\overline{DIOW}$ recovery time	min	—	—	—	70	25	A8.4
t_3	$\overline{DIOW}$ data setup	min	60	45	30	30	20	A8.5
t_4	$\overline{DIOW}$ data hold	min	30	20	15	10	10	A8.6
t_5	$\overline{DIOR}$ data setup	min	50	35	20	20	20	A8.7
t_6	$\overline{DIOR}$ data hold	min	5	5	5	5	5	A8.8
t_9	$\overline{DIOR}$/$\overline{DIOW}$ to address valid hold	min	20	15	10	10	10	A8.9
t_A	IORDY setup	max	35	35	35	35	35	A8.10
t_B	IORDY pulse width	max	1250	1250	1250	1250	1250	A8.11

Downloaded from Arrow.com.

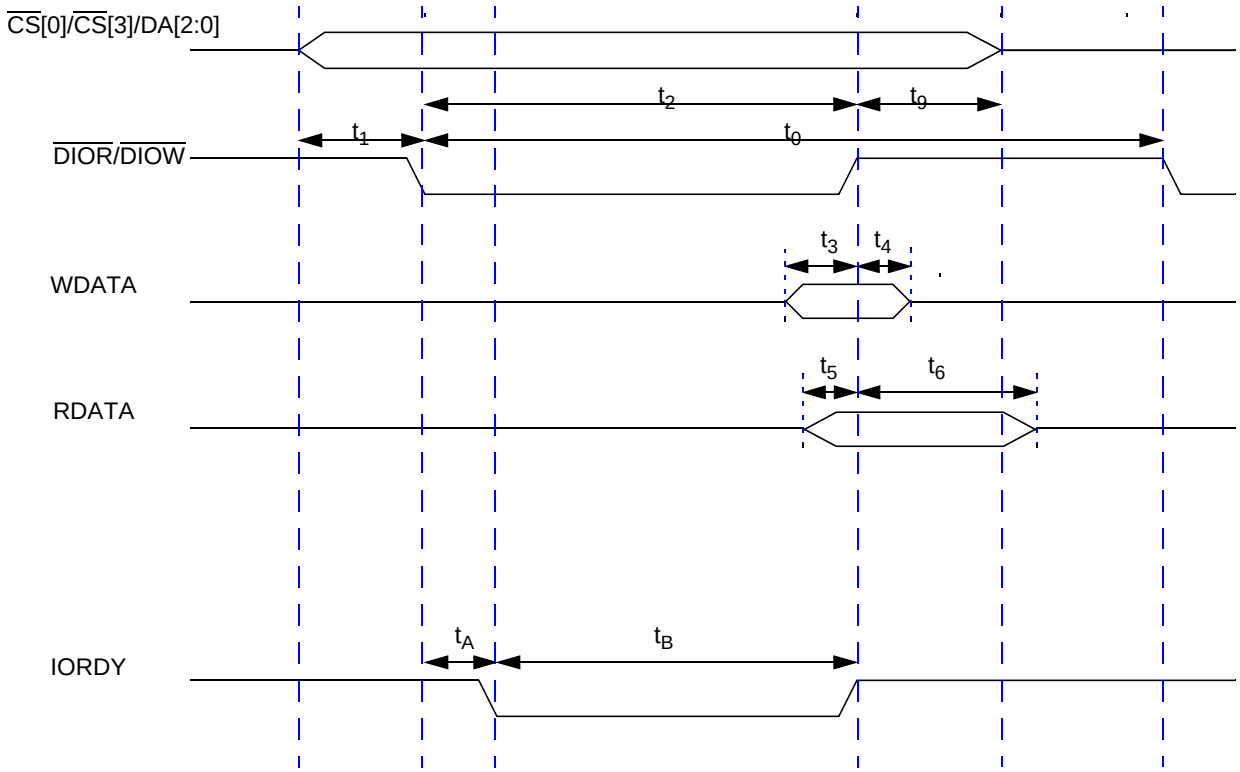

Figure 14. PIO Mode Timing

Table 28. Multiword DMA Timing Specifications

Sym	Multiword DMA Timing Parameters	Min/Max	Mode 0(ns)	Mode 1(ns)	Mode 2(ns)	SpecID
t_0	Cycle Time	min	480	150	120	A8.12
t_C	$\overline{DMACK}$ to DMARQ delay	max	—	—	—	A8.13
t_D	$\overline{DIOR}$/$\overline{DIOW}$ pulse width (16-bit)	min	215	80	70	A8.14
t_E	$\overline{DIOR}$ data access	max	150	60	50	A8.15
t_G	$\overline{DIOR}$/$\overline{DIOW}$ data setup	min	100	30	20	A8.16
t_F	$\overline{DIOR}$ data hold	min	5	5	5	A8.17
t_H	$\overline{DIOW}$ data hold	min	20	15	10	A8.18
t_I	DMACK to $\overline{DIOR}$/$\overline{DIOW}$ setup	min	0	0	0	A8.19
t_J	$\overline{DIOR}$/$\overline{DIOW}$ to $\overline{DMACK}$ hold	min	20	5	5	A8.20
t_{Kr}	$\overline{DIOR}$ negated pulse width	min	50	50	25	A8.21
t_{Kw}	$\overline{DIOW}$ negated pulse width	min	215	50	25	A8.22
t_{Lr}	$\overline{DIOR}$ to DMARQ delay	max	120	40	35	A8.23
t_{Lw}	$\overline{DIOW}$ to DMARQ delay	max	40	40	35	A8.24

Downloaded from Arrow.com.

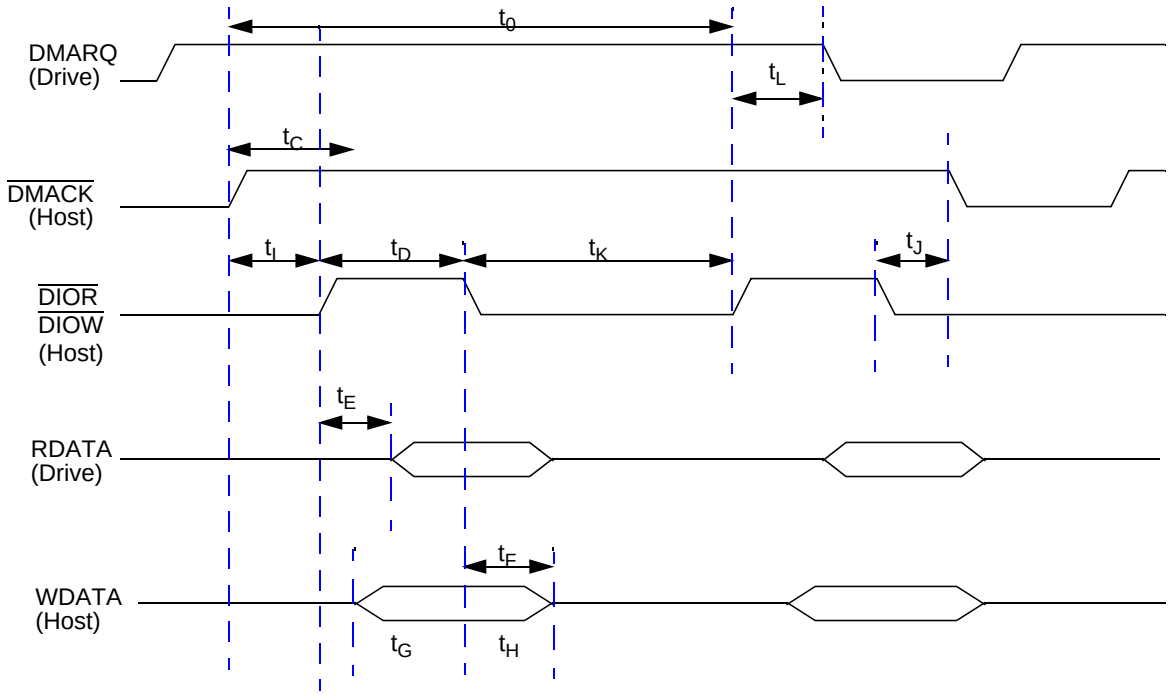

Figure 15. Multiword DMA Timing

NOTE

The direction of signal assertion is towards the top of the page, and the direction of negation is towards the bottom of the page, irrespective of the electrical properties of the signal.

Table 29. Ultra DMA Timing Specification

Sym	MODE 0 (ns)		MODE 1 (ns)		MODE 2 (ns)		Comment	SpecID
	Min	Max	Min	Max	Min	Max		
t_{CYC}	114	—	75	—	55	—	Cycle time allowing for asymmetry and clock variations from STROBE edge to STROBE edge	A8.26
t_{2CYC}	235	—	156	—	117	—	Two-cycle time allowing for clock variations, from rising edge to next rising edge or from falling edge to next falling edge of STROBE.	A8.27
t_{DS}	15	—	10	—	7	—	Data setup time at recipient.	A8.28
t_{DH}	5	—	5	—	5	—	Data hold time at recipient.	A8.29
t_{DVS}	70	—	48	—	34	—	Data valid setup time at sender, to STROBE edge.	A8.30
t_{DVH}	6	—	6	—	6	—	Data valid hold time at sender, from STROBE edge.	A8.31
t_{FS}	0	230	0	200	0	170	First STROBE time for drive to first negate DSTROBE from STOP during a data-in burst.	A8.32
t_{LI}	0	150	0	150	0	150	Limited Interlock time.	A8.33
t_{MLI}	20	—	20	—	20	—	Interlock time with minimum.	A8.34
t_{UI}	0	—	0	—	0	—	Unlimited interlock time.	A8.35

Downloaded from Arrow.com.

Table 29. Ultra DMA Timing Specification (continued)

Sym	MODE 0 (ns)		MODE 1 (ns)		MODE 2 (ns)		Comment	SpecID
	Min	Max	Min	Max	Min	Max		
t_{AZ}	—	10	—	10	—	10	Maximum time allowed for output drivers to release from being asserted or negated	A8.36
t_{ZAH}	20	—	20	—	20	—	Minimum delay time required for output drivers to assert or negate from released state	A8.37
t_{ZAD}	0	—	0	—	0	—		A8.38
t_{ENV}	20	70	20	70	20	70	Envelope time—from $\overline{\text{DMACK}}$ to STOP and $\overline{\text{HDMARDY}}$ during data out burst initiation.	A8.39
t_{SR}	—	50	—	30	—	20	STROBE to $\overline{\text{DMARDY}}$ time, if $\overline{\text{DMARDY}}$ is negated before this long after STROBE edge, the recipient receives no more than one additional data word.	A8.40
t_{RFS}	—	75	—	60	—	50	Ready-to-Final STROBE time—no STROBE edges are sent this long after negation of $\overline{\text{DMARDY}}$.	A8.41
t_{RP}	160	—	125	—	100	—	Ready-to-Pause time—the time recipient waits to initiate pause after negating $\overline{\text{DMARDY}}$.	A8.42
t_{IORDYZ}	—	20	—	20	—	20	Pull-up time before allowing IORDY to be released.	A8.43
t_{ZIORDY}	0	—	0	—	0	—	Minimum time drive waits before driving IORDY	A8.44
t_{ACK}	20	—	20	—	20	—	Setup and hold times for $\overline{\text{DMACK}}$, before assertion or negation.	A8.45
t_{SS}	50	—	50	—	50	—	Time from STROBE edge to negation of DMARQ or assertion of STOP, when sender terminates a burst.	A8.46

NOTES:

1 t_{UI}, t_{MLI}, t_{LI} indicate sender-to-recipient or recipient-to-sender interlocks. That is, one agent (sender or recipient) is waiting for the other agent to respond with a signal before proceeding.
- t_{UI} is an unlimited interlock that has no maximum time value.
- t_{MLI} is a limited time-out that has a defined minimum.
- t_{LI} is a limited time-out that has a defined maximum.

2 All timing parameters are measured at the connector of the drive to which the parameter applies. For example, the sender shall stop generating STROBE edges t_{RFS} after negation of DMARDY. STROBE and DMARDY timing measurements are taken at the connector of the sender. Even though the sender stops generating STROBE edges, the receiver may receive additional STROBE edges due to propagation delays. All timing measurement switching points (low to high and high to low) are taken at 1.5 V.

Downloaded from Arrow.com.

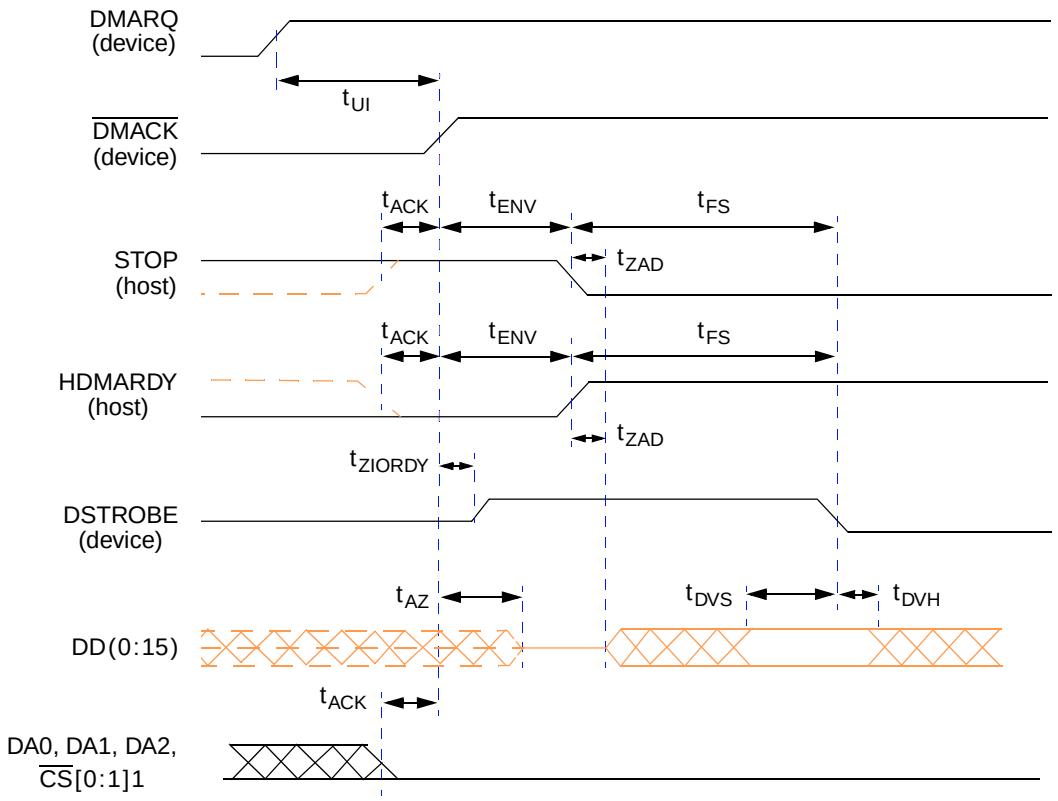

Figure 16. Timing Diagram—Initiating an Ultra DMA Data In Burst

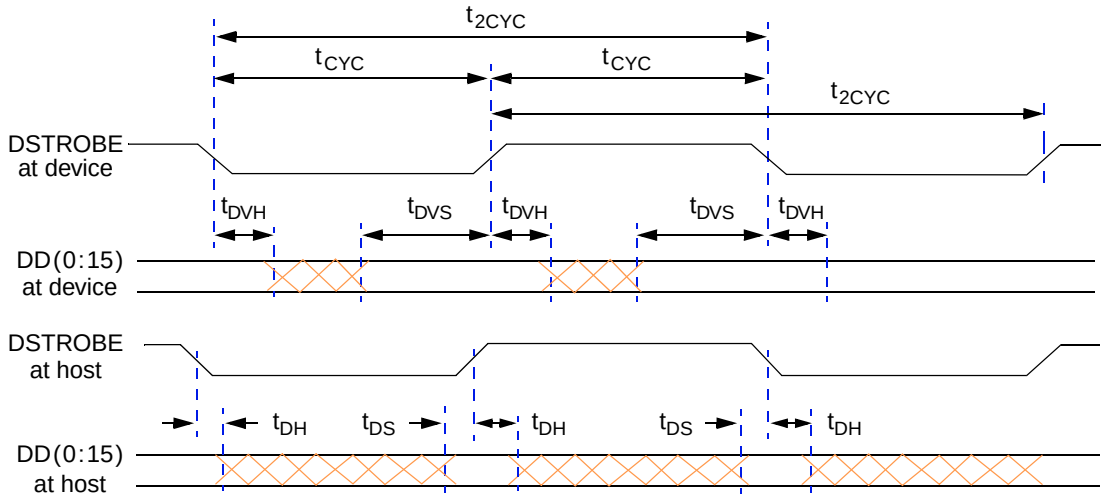

Figure 17. Timing Diagram—Sustained Ultra DMA Data In Burst

Downloaded from Arrow.com.

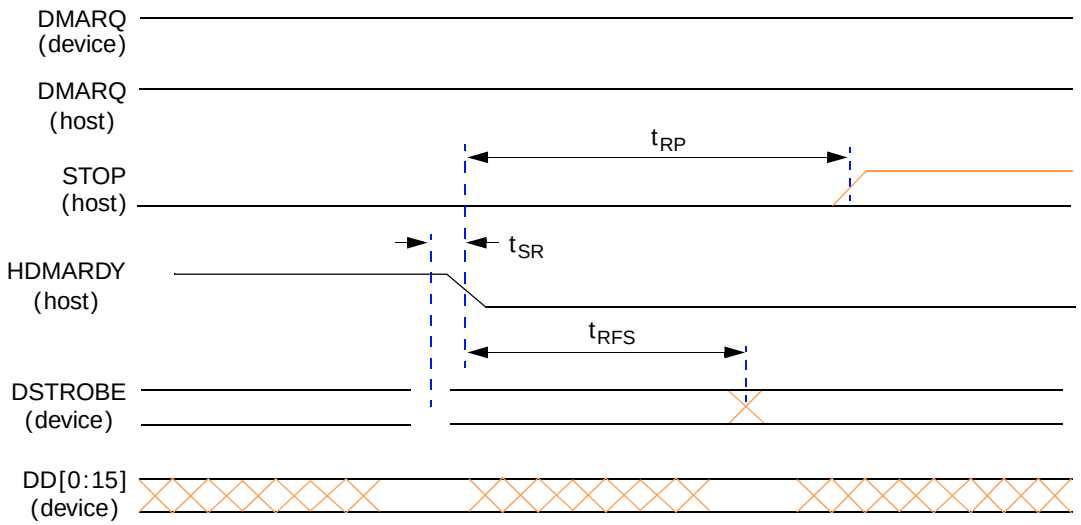

Figure 18. Timing Diagram—Host Pausing an Ultra DMA Data In Burst

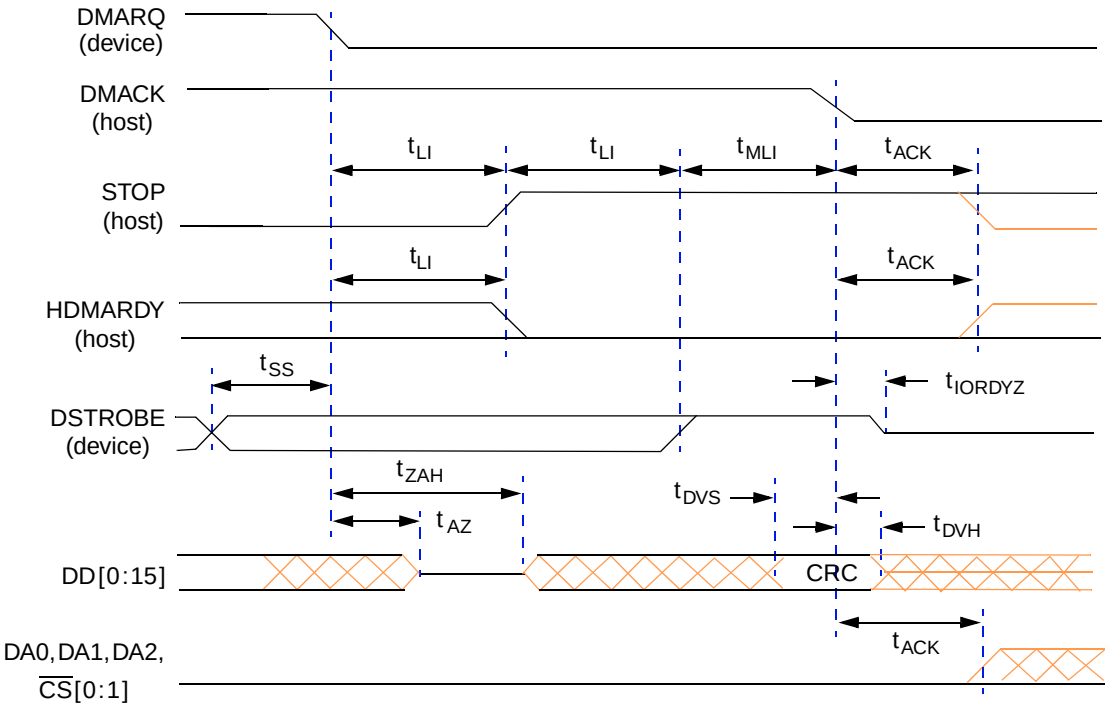

Figure 19. Timing Diagram—Drive Terminating Ultra DMA Data In Burst

Downloaded from Arrow.com.

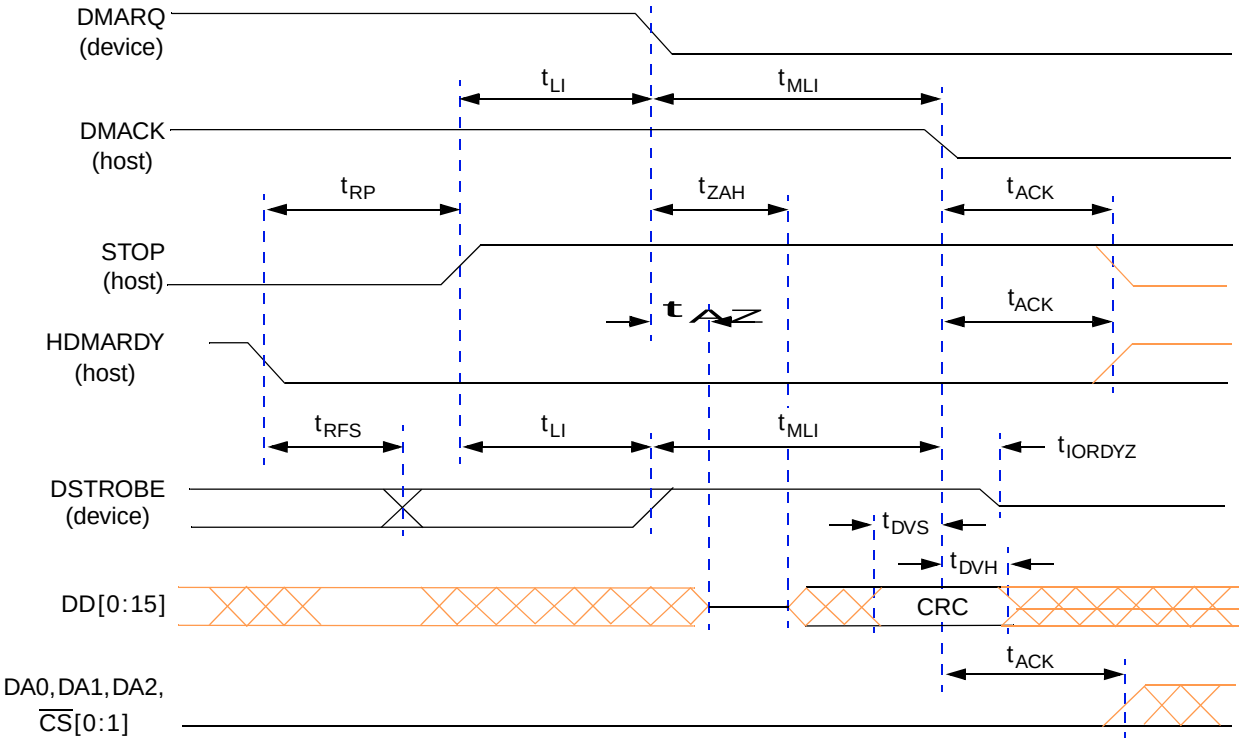

Figure 20. Timing Diagram—Host Terminating Ultra DMA Data In Burst

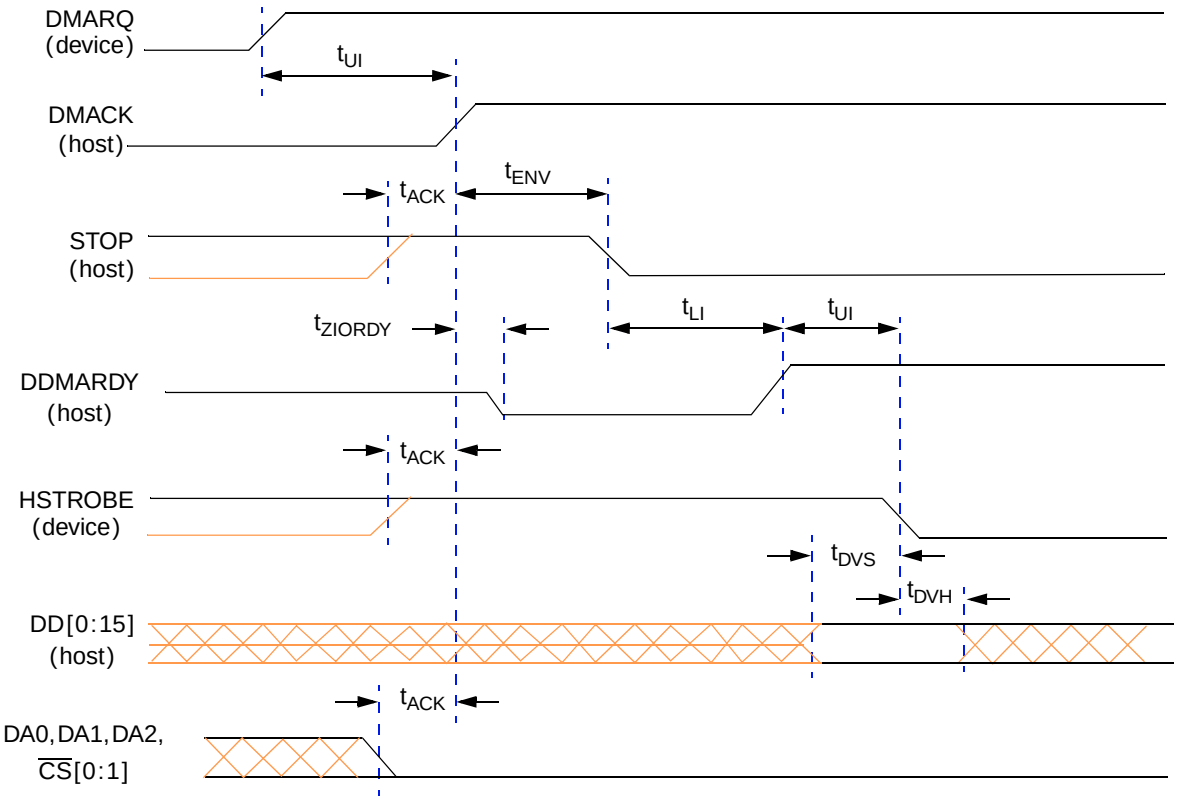

Figure 21. Timing Diagram—Initiating an Ultra DMA Data Out Burst

Downloaded from Arrow.com.

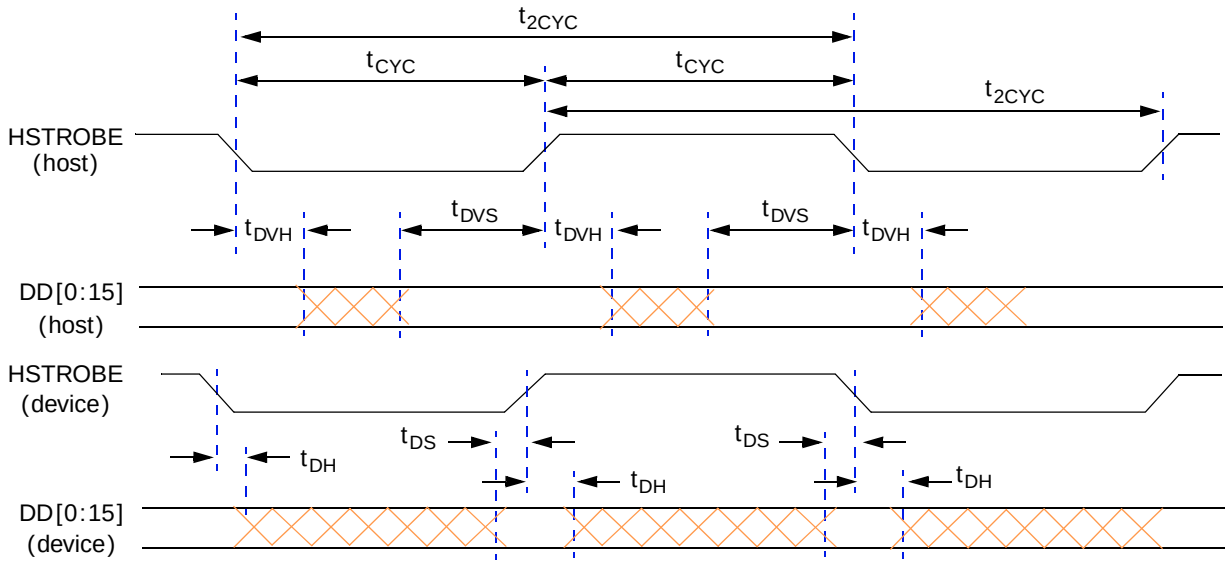

Figure 22. Timing Diagram—Sustained Ultra DMA Data Out Burst

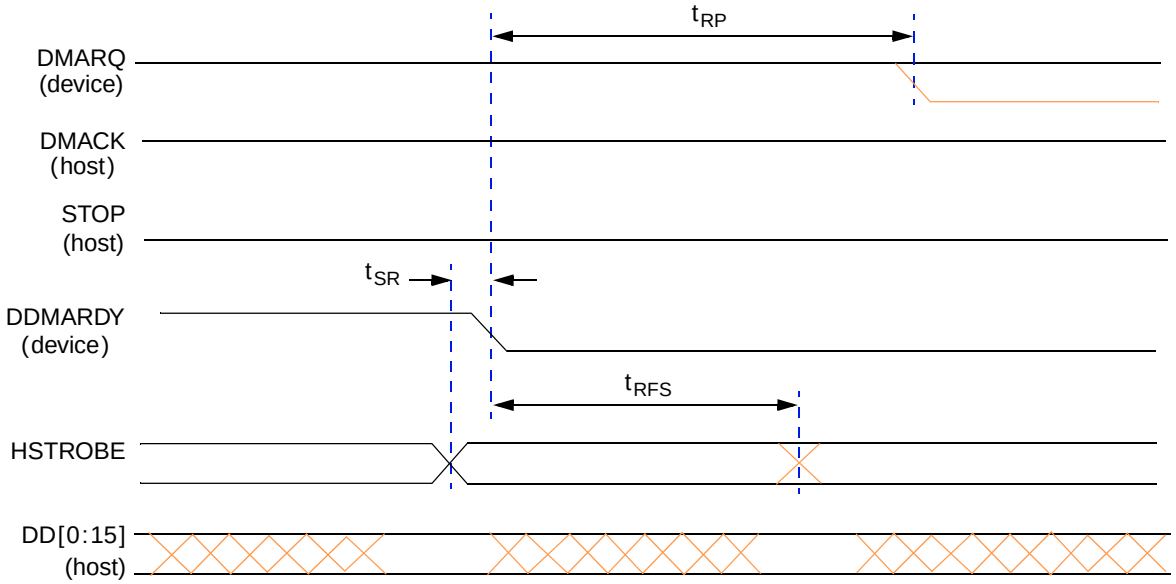

Figure 23. Timing Diagram—Drive Pausing an Ultra DMA Data Out Burst

Downloaded from Arrow.com.

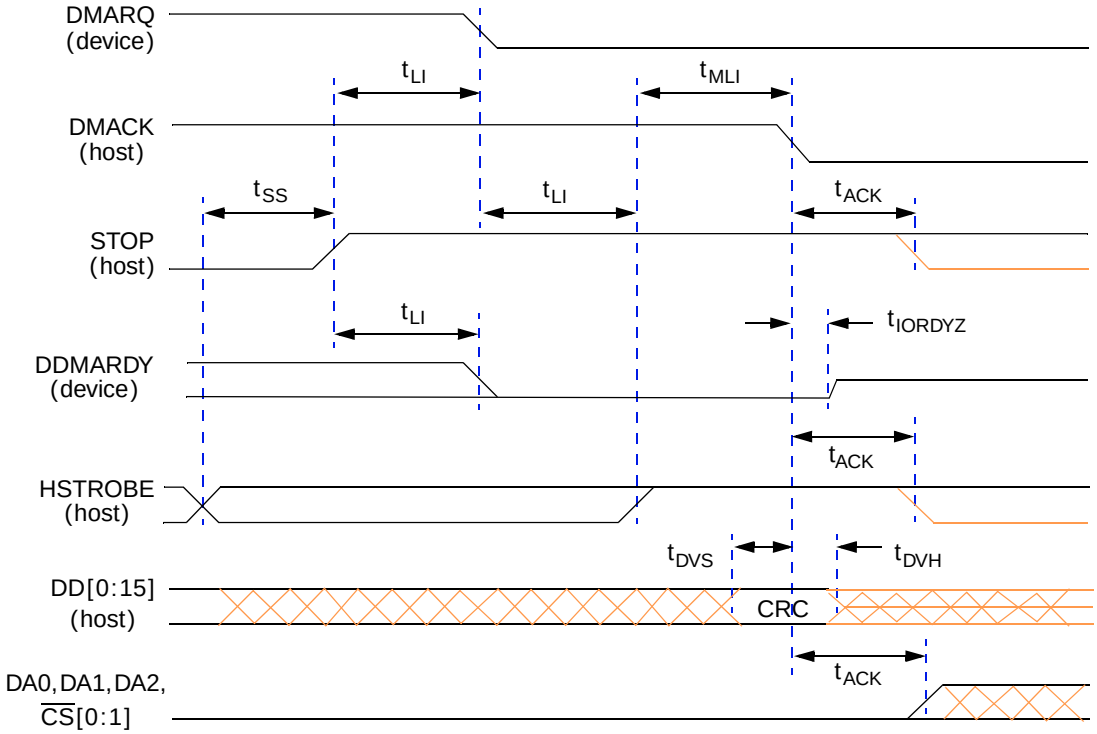

Figure 24. Timing Diagram—Host Terminating Ultra DMA Data Out Burst

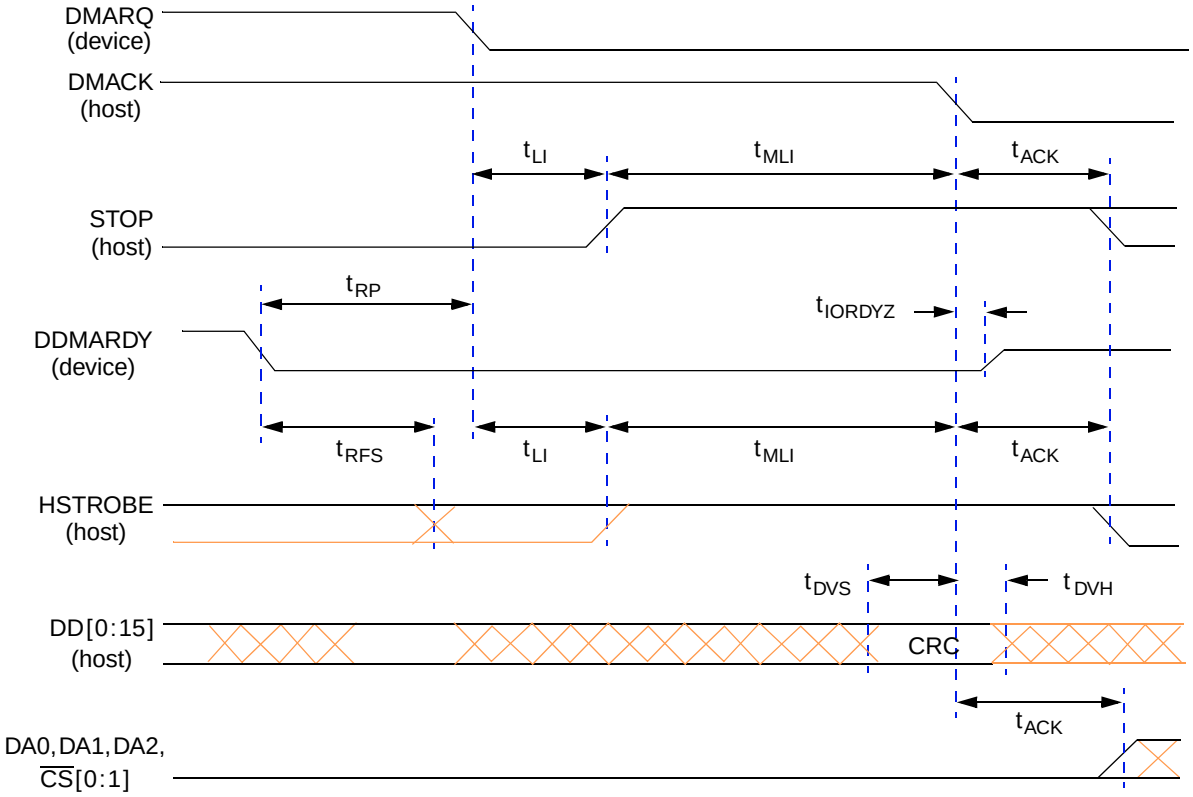

Figure 25. Timing Diagram—Drive Terminating Ultra DMA Data Out Burst

Downloaded from Arrow.com.

Table 30. Timing Specification ata_isolation

Sym	Description	Min	Max	Units	SpecID
1	ata_isolation setup time	7	—	IP Bus cycles	A8.48
2	ata_isolation hold time	—	19	IP Bus cycles	A8.49

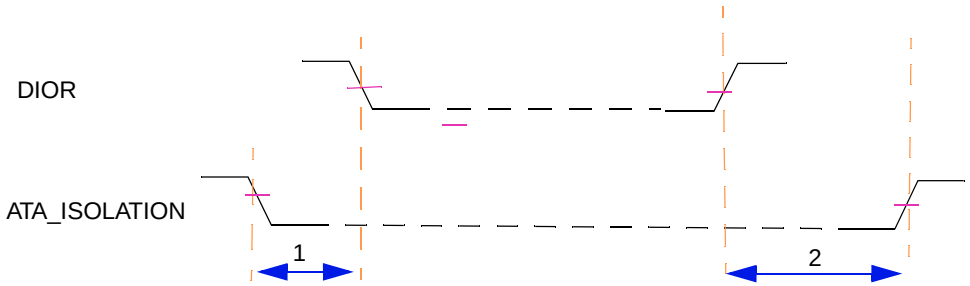

Figure 26. Timing Diagram—ATA-ISOLATION

1.3.10 Ethernet

AC Test Timing Conditions:

- Output Loading
  All Outputs: 25 pF

Table 31. MII Rx Signal Timing

Sym	Description	Min	Max	Unit	SpecID
t_1	RXD[3:0], RX_DV, RX_ER to RX_CLK setup	10	—	ns	A9.1
t_2	RX_CLK to RXD[3:0], RX_DV, RX_ER hold	10	—	ns	A9.2
t_3	RX_CLK pulse width high	35%	65%	RX_CLK Period[(1)]	A9.3
t_4	RX_CLK pulse width low	35%	65%	RX_CLK Period[(1)]	A9.4

1 RX_CLK shall have a frequency of 25% of data rate of the received signal. See the IEEE 802.3 Specification.

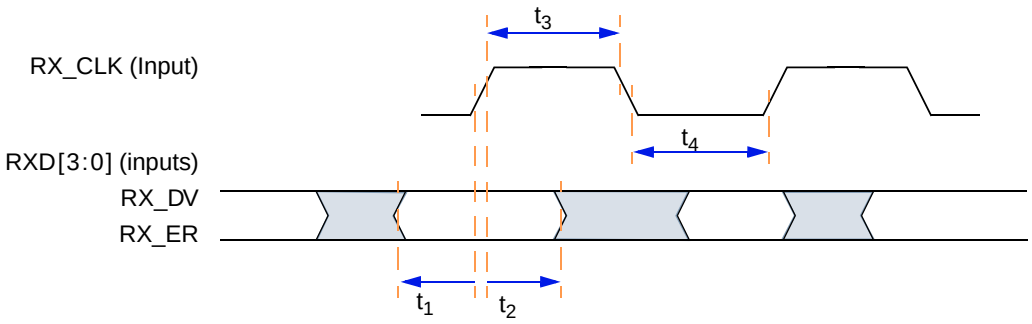

Figure 27. Ethernet Timing Diagram—MII Rx Signal

Downloaded from Arrow.com.

Table 32. MII Tx Signal Timing

Sym	Description	Min	Max	Unit	SpecID
t_5	TX_CLK rising edge to TXD[3:0], TX_EN, TX_ER invalid	5	—	ns	A9.5
t_6	TX_CLK rising edge to TXD[3:0], TX_EN, TX_ER valid	—	25	ns	A9.6
t_7	TX_CLK pulse width high	35%	65%	TX_CLK Period[(1)]	A9.7
t_8	TX_CLK pulse width low	35%	65%	TX_CLK Period[(1)]	A9.8

1 The TX_CLK frequency shall be 25% of the nominal transmit frequency, e.g., a PHY operating at 100 Mb/s must provide a TX_CLK frequency of 25 MHz and a PHY operating at 10 Mb/s must provide a TX_CLK frequency of 2.5 MHz. See the IEEE 802.3 Specification.

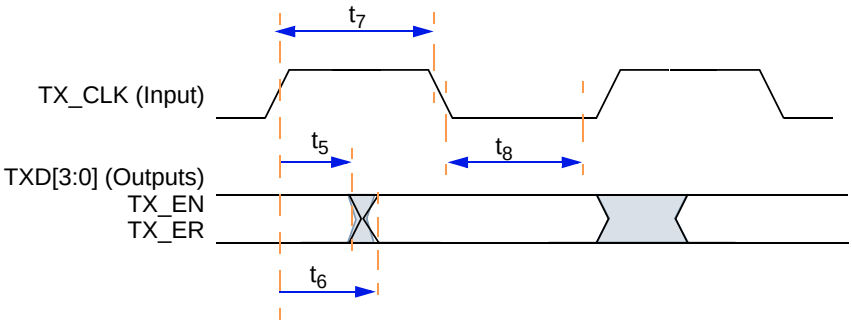

Figure 28. Ethernet Timing Diagram—MII Tx Signal

Table 33. MII Async Signal Timing

Sym	Description	Min	Max	Unit	SpecID
t_9	CRS, COL minimum pulse width	1.5	—	TX_CLK Period	A9.9

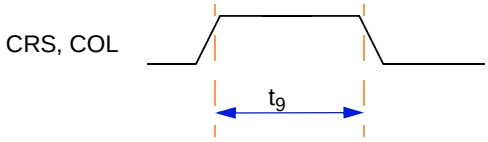

Figure 29. Ethernet Timing Diagram—MII Async

Downloaded from Arrow.com.

Table 34. MII Serial Management Channel Signal Timing

Sym	Description	Min	Max	Unit	SpecID
t_{10}	MDC falling edge to MDIO output delay	0	25	ns	A9.10
t_{11}	MDIO (input) to MDC rising edge setup	10	—	ns	A9.11
t_{12}	MDIO (input) to MDC rising edge hold	10	—	ns	A9.12
t_{13}	MDC pulse width high(1)	160	—	ns	A9.13
t_{14}	MDC pulse width low(1)	160	—	ns	A9.14
t_{15}	MDC period(2)	400	—	ns	A9.15

1 MDC is generated by MPC5200B with a duty cycle of 50% except when MII_SPEED in the FEC MII_SPEED control register is changed during operation. See the *MPC5200B User's Manual (MPC5200BUM)*.

2 The MDC period must be set to a value of less than or equal to 2.5 MHz (to be compliant with the IEEE MII characteristic) by programming the FEC MII_SPEED control register. See the *MPC5200B User's Manual (MPC5200BUM)*.

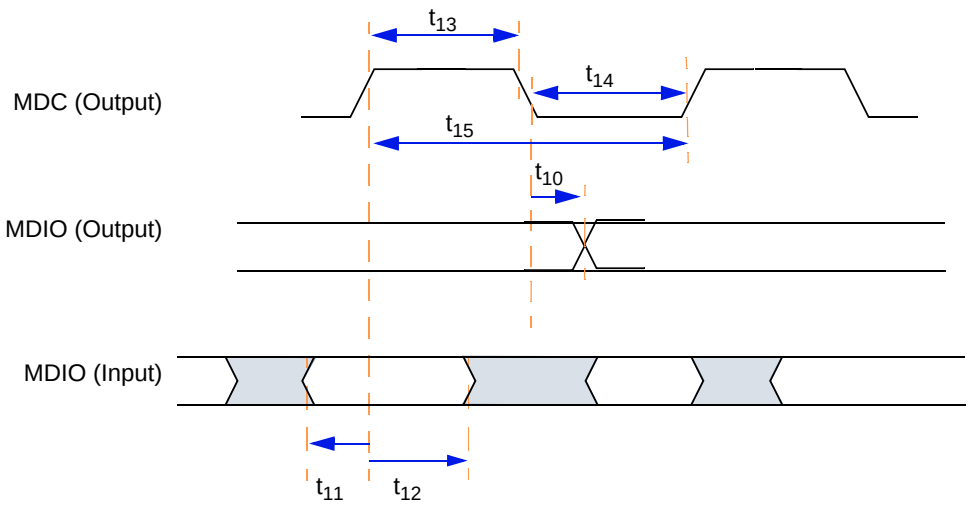

Figure 30. Ethernet Timing Diagram—MII Serial Management

1.3.11 USB

Table 35. Timing Specifications—USB Output Line

Sym	Description	Min	Max	Units	SpecID
1	USB Bit width(1)	83.3	667	ns	A10.1
2	Transceiver enable time	83.3	667	ns	A10.2
3	Signal falling time	—	7.9	ns	A10.3
4	Signal rising time	—	7.9	ns	A10.4

1 Defined in the USB config register, (12 Mbit/s or 1.5 Mbit/s mode).

NOTE

Output timing is specified at a nominal 50 pF load.

Downloaded from Arrow.com.

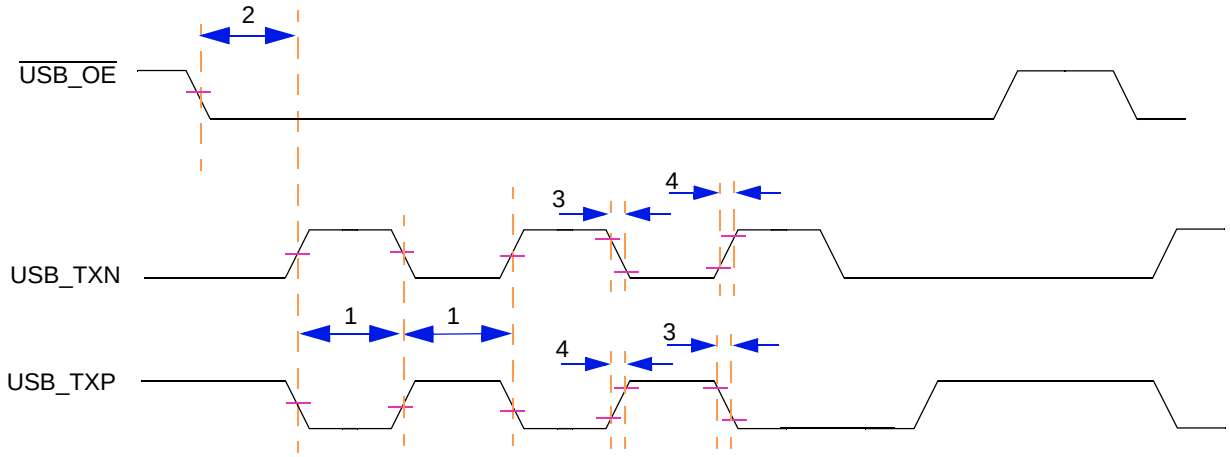

Figure 31. Timing Diagram—USB Output Line

1.3.12 SPI

Table 36. Timing Specifications — SPI Master Mode, Format 0 (CPHA = 0)

Sym	Description	Min	Max	Units	SpecID
1	Cycle time	4	1024	IP-Bus Cycle[(1)]	A11.1
2	Clock high or low time	2	512	IP-Bus Cycle[(1)]	A11.2
3	Slave select to clock delay	15.0	—	ns	A11.3
4	Output Data valid after Slave Select ($\overline{SS}$)	—	20.0	ns	A11.4
5	Output Data valid after SCK	—	20.0	ns	A11.5
6	Input Data setup time	20.0	—	ns	A11.6
7	Input Data hold time	20.0	—	ns	A11.7
8	Slave disable lag time	15.0	—	ns	A11.8
9	Sequential transfer delay	1	—	IP-Bus Cycle[(1)]	A11.9
10	Clock falling time	—	7.9	ns	A11.10
11	Clock rising time	—	7.9	ns	A11.11

1 Inter Peripheral Clock is defined in the *MPC5200B User's Manual (MPC5200BUM)*.

NOTE

Output timing is specified at a nominal 50 pF load.

Downloaded from Arrow.com.

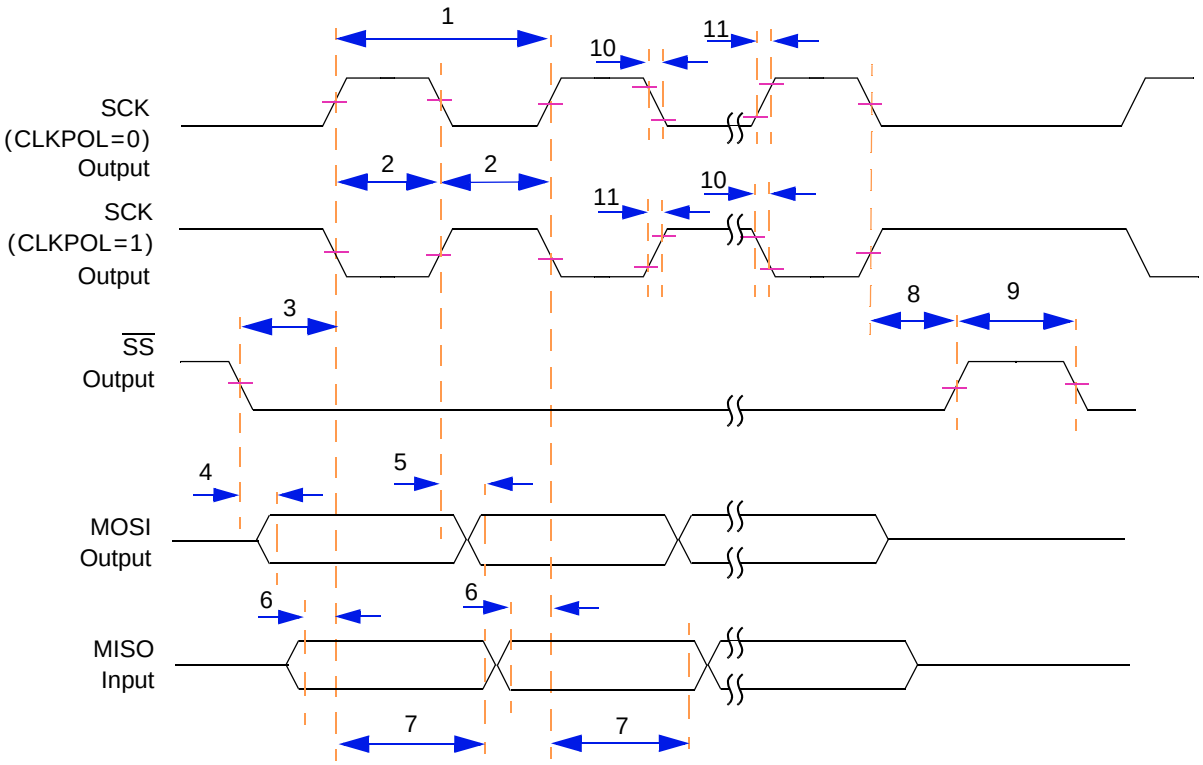

Figure 32. Timing Diagram — SPI Master Mode, Format 0 (CPHA = 0)

Table 37. Timing Specifications — SPI Slave Mode, Format 0 (CPHA = 0)

Sym	Description	Min	Max	Units	SpecID
1	Cycle time	4	1024	IP-Bus Cycle[(1)]	A11.12
2	Clock high or low time	2	512	IP-Bus Cycle[(1)]	A11.13
3	Slave select to clock delay	15.0	—	ns	A11.14
4	Output Data valid after Slave Select ($\overline{SS}$)	—	50.0	ns	A11.15
5	Output Data valid after SCK	—	50.0	ns	A11.16
6	Input Data setup time	50.0	—	ns	A11.17
7	Input Data hold time	0.0	—	ns	A11.18
8	Slave disable lag time	15.0	—	ns	A11.19
9	Sequential Transfer delay	1	—	IP-Bus Cycle[(1)]	A11.20

[1] Inter Peripheral Clock is defined in the *MPC5200B User's Manual (MPC5200BUM)*.

NOTE

Output timing is specified at a nominal 50 pF load.

Downloaded from Arrow.com.

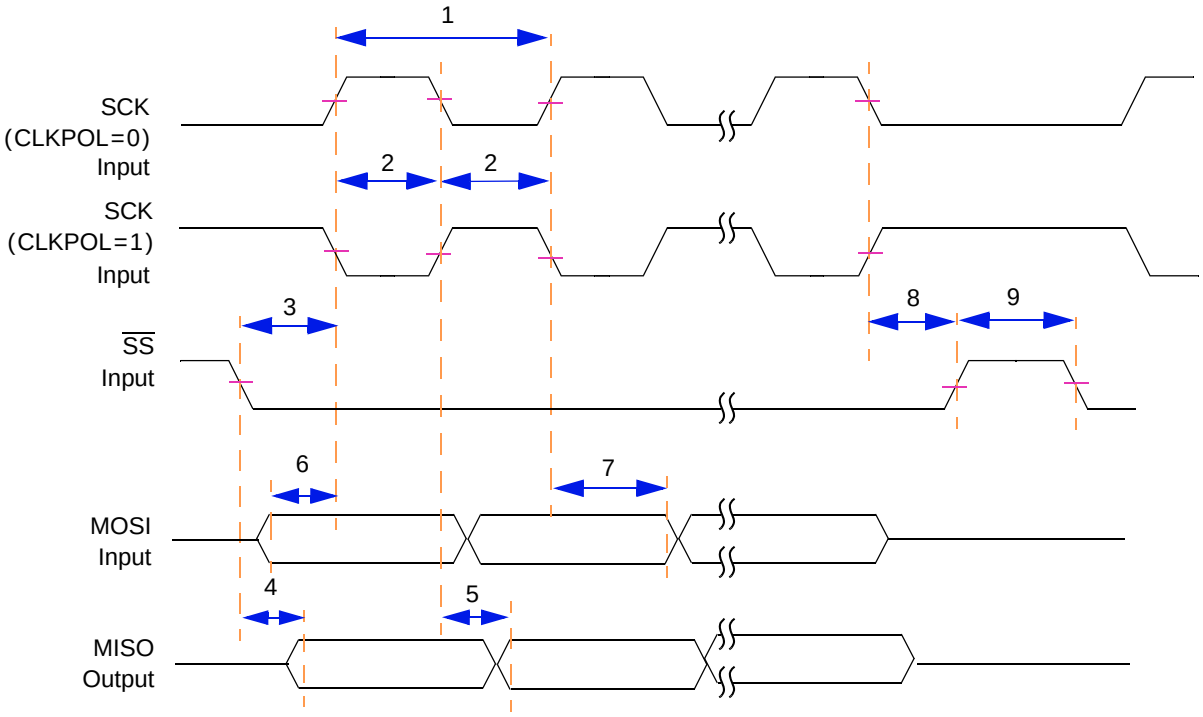

Figure 33. Timing Diagram — SPI Slave Mode, Format 0 (CPHA = 0)

Table 38. Timing Specifications — SPI Master Mode, Format 1 (CPHA = 1)

Sym	Description	Min	Max	Units	SpecID
1	Cycle time	4	1024	IP-Bus Cycle[(1)]	A11.21
2	Clock high or low time	2	512	IP-Bus Cycle[(1)]	A11.22
3	Slave select to clock delay	15.0	—	ns	A11.23
4	Output data valid	—	20.0	ns	A11.24
5	Input Data setup time	20.0	—	ns	A11.25
6	Input Data hold time	20.0	—	ns	A11.26
7	Slave disable lag time	15.0	—	ns	A11.27
8	Sequential Transfer delay	1	—	IP-Bus Cycle[(1)]	A11.28
9	Clock falling time	—	7.9	ns	A11.29
10	Clock rising time	—	7.9	ns	A11.30

1 Inter Peripheral Clock is defined in the *MPC5200B User's Manual (MPC5200BUM)*.

NOTE

Output timing is specified at a nominal 50 pF load.

Downloaded from Arrow.com.

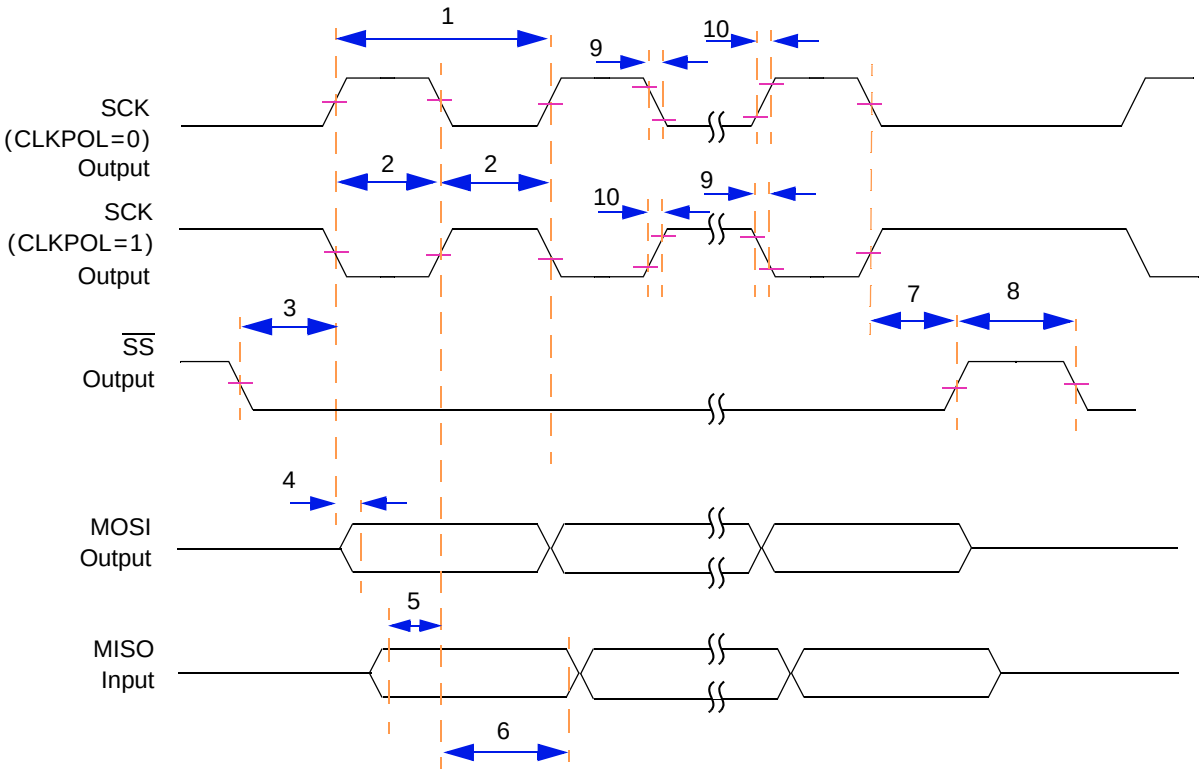

Figure 34. Timing Diagram — SPI Master Mode, Format 1 (CPHA = 1)

Table 39. Timing Specifications — SPI Slave Mode, Format 1 (CPHA = 1)

Sym	Description	Min	Max	Units	SpecID
1	Cycle time	4	1024	IP-Bus Cycle[(1)]	A11.31
2	Clock high or low time	2	512	IP-Bus Cycle[(1)]	A11.32
3	Slave select to clock delay	15.0	—	ns	A11.33
4	Output data valid	—	50.0	ns	A11.34
5	Input Data setup time	50.0	—	ns	A11.35
6	Input Data hold time	0.0	—	ns	A11.36
7	Slave disable lag time	15.0	—	ns	A11.37
8	Sequential Transfer delay	1	—	IP-Bus Cycle[(1)]	A11.38

[1] Inter Peripheral Clock is defined in the *MPC5200B User's Manual (MPC5200BUM)*.

NOTE

Output timing is specified at a nominal 50 pF load.

Downloaded from Arrow.com.

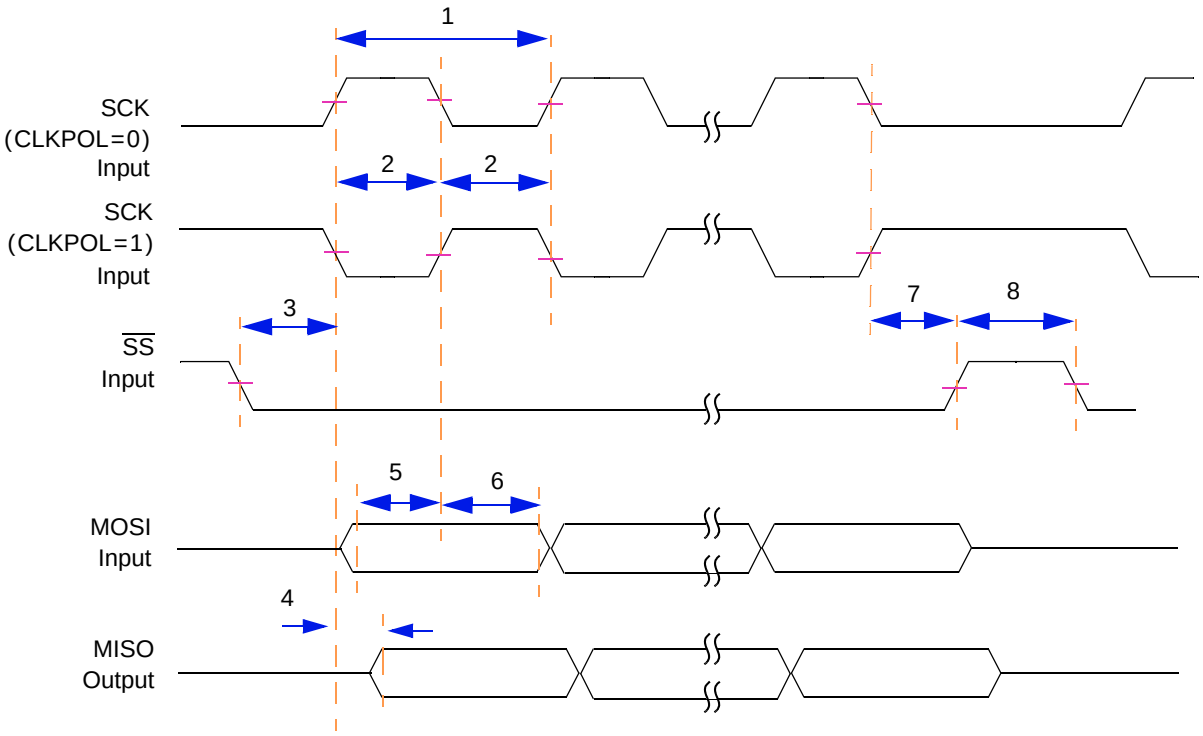

Figure 35. Timing Diagram — SPI Slave Mode, Format 1 (CPHA = 1)

1.3.13 MSCAN

The CAN functions are available as RX and TX pins at normal IO pads (I^2C1+GPTimer or PSC2). There is no filter for the WakeUp dominant pulse. Any High-to-Low edge can cause WakeUp, if configured.

1.3.14 I^2C

Table 40. I^2C Input Timing Specifications—SCL and SDA

Sym	Description	Min	Max	Units	SpecID
1	Start condition hold time	2	—	IP-Bus Cycle[(1)]	A13.1
2	Clock low time	8	—	IP-Bus Cycle[(1)]	A13.2
4	Data hold time	0.0	—	ns	A13.3
6	Clock high time	4	—	IP-Bus Cycle[(1)]	A13.4
7	Data setup time	0.0	—	ns	A13.5
8	Start condition setup time (for repeated start condition only)	2	—	IP-Bus Cycle[(1)]	A13.6
9	Stop condition setup time	2	—	IP-Bus Cycle[(1)]	A13.7

[1] Inter Peripheral Clock is defined in the *MPC5200B User's Manual (MPC5200BUM)*.

Downloaded from Arrow.com.

Table 41. I²C Output Timing Specifications—SCL and SDA

Sym	Description	Min	Max	Units	SpecID
1[1]	Start condition hold time	6	—	IP-Bus Cycle[3]	A13.8
2[1]	Clock low time	10	—	IP-Bus Cycle[3]	A13.9
3[2]	SCL/SDA rise time	—	7.9	ns	A13.10
4[1]	Data hold time	7	—	IP-Bus Cycle[3]	A13.11
5[1]	SCL/SDA fall time	—	7.9	ns	A13.12
6[1]	Clock high time	10	—	IP-Bus Cycle[3]	A13.13
7[1]	Data setup time	2	—	IP-Bus Cycle[3]	A13.14
8[1]	Start condition setup time (for repeated start condition only)	20	—	IP-Bus Cycle[3]	A13.15
9[1]	Stop condition setup time	10	—	IP-Bus Cycle[3]	A13.16

1 Programming IFDR with the maximum frequency (IFDR=0x20) results in the minimum output timings listed. The I²C interface is designed to scale the data transition time, moving it to the middle of the SCL low period. The actual position is affected by the prescale and division values programmed in IFDR.

2 Because SCL and SDA are open-drain-type outputs, which the processor can only actively drive low, the time SCL or SDA takes to reach a high level depends on external signal capacitance and pull-up resistor values.

3 Inter Peripheral Clock is defined in the *MPC5200B User's Manual (MPC5200BUM)*.

NOTE

Output timing is specified at a nominal 50 pF load.

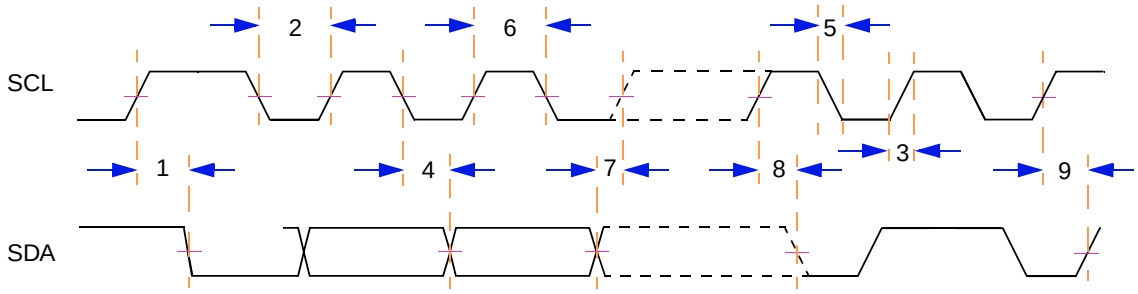

Figure 36. Timing Diagram—I²C Input/Output

1.3.15 J1850

See the *MPC5200B User's Manual (MPC5200BUM)*.

Downloaded from Arrow.com.

1.3.16 PSC

1.3.16.1 Codec Mode (8-,16-, 24-, and 32-bit)/I^{2}S Mode

Table 42. Timing Specifications—8-, 16-, 24-, and 32-bit CODEC / I^{2}S Master Mode

Sym	Description	Min	Typ	Max	Units	SpecID
1	Bit Clock cycle time, programmed in CCS register	40.0	—	—	ns	A15.1
2	Clock duty cycle	—	50	—	%[(1)]	A15.2
3	Bit Clock fall time	—	—	7.9	ns	A15.3
4	Bit Clock rise time	—	—	7.9	ns	A15.4
5	FrameSync valid after clock edge	—	—	8.4	ns	A15.5
6	FrameSync invalid after clock edge	—	—	8.4	ns	A15.6
7	Output Data valid after clock edge	—	—	9.3	ns	A15.7
8	Input Data setup time	6.0	—	—	ns	A15.8

1 Bit Clock cycle time.

NOTE

Output timing is specified at a nominal 50 pF load.

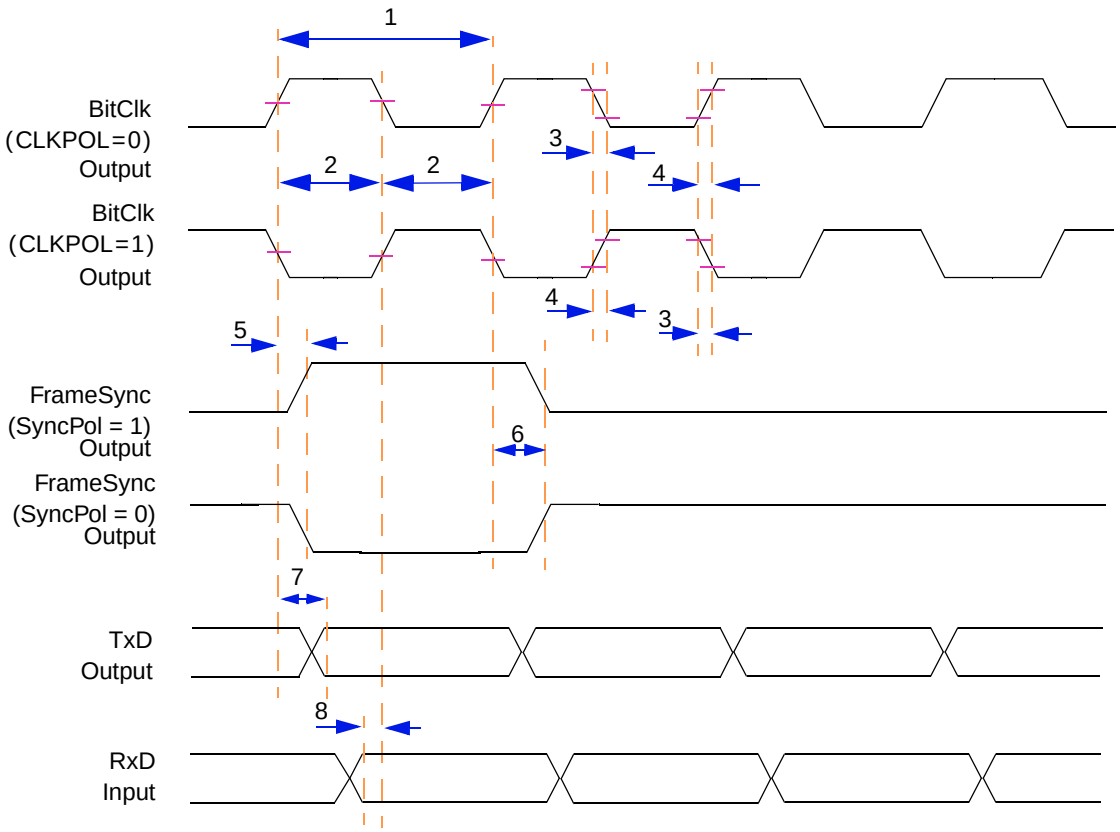

Figure 37. Timing Diagram — 8-, 16-, 24-, and 32-bit CODEC / I^{2}S Master Mode

Downloaded from Arrow.com.

Table 43. Timing Specifications — 8-, 16-, 24-, and 32-bit CODEC / I²S Slave Mode

Sym	Description	Min	Typ	Max	Units	SpecID
1	Bit Clock cycle time	40.0	—	—	ns	A15.9
2	Clock duty cycle	—	50	—	%(1)	A15.10
3	FrameSync setup time	1.0	—	—	ns	A15.11
4	Output Data valid after clock edge	—	—	14.0	ns	A15.12
5	Input Data setup time	1.0	—	—	ns	A15.13
6	Input Data hold time	1.0	—	—	ns	A15.14

1 Bit Clock cycle time.

NOTE

Output timing is specified at a nominal 50 pF load.

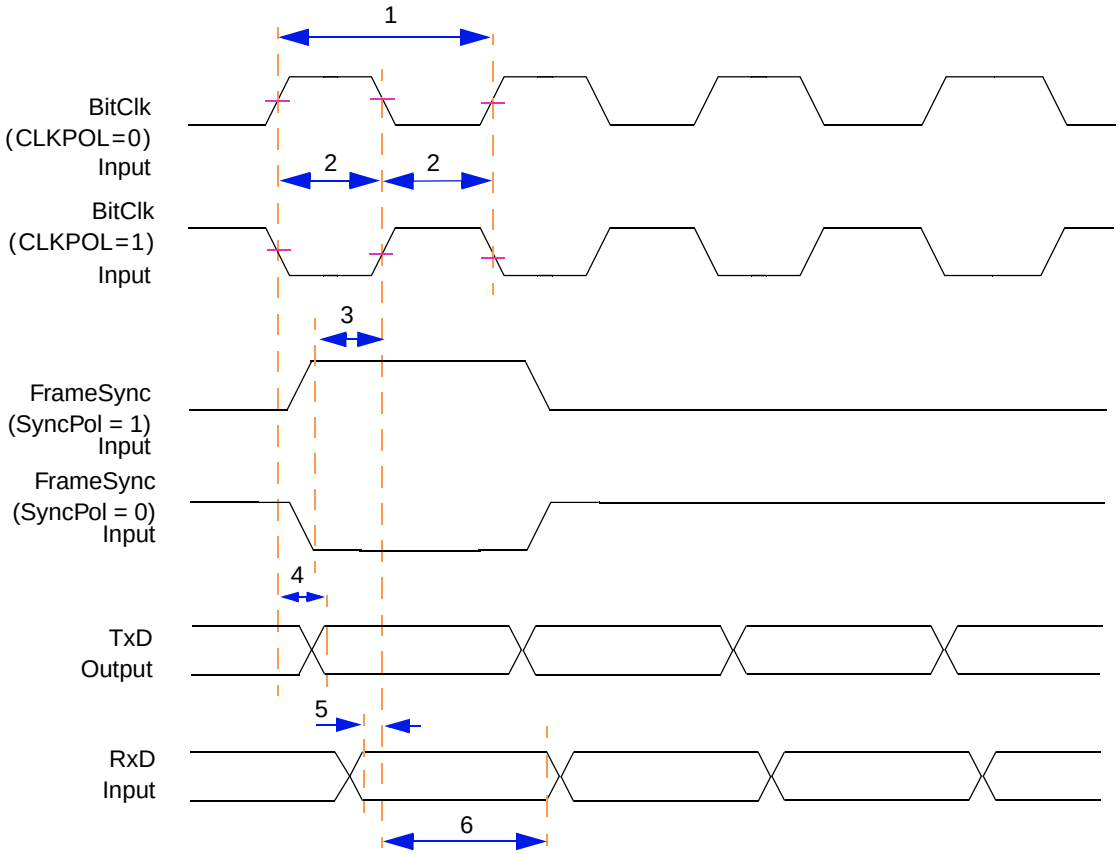

Figure 38. Timing Diagram — 8-, 16-, 24-, and 32-bit CODEC / I²S Slave Mode

Downloaded from Arrow.com.

1.3.16.2 AC97 Mode

Table 44. Timing Specifications — AC97 Mode

Sym	Description	Min	Typ	Max	Units	SpecID
1	Bit Clock cycle time	—	81.4	—	ns	A15.15
2	Clock pulse high time	—	40.7	—	ns	A15.16
3	Clock pulse low time	—	40.7	—	ns	A15.17
4	FrameSync valid after rising clock edge	—	—	13.0	ns	A15.18
5	Output Data valid after rising clock edge	—	—	14.0	ns	A15.19
6	Input Data setup time	1.0	—	—	ns	A15.20
7	Input Data hold time	1.0	—	—	ns	A15.21

NOTE

Output timing is specified at a nominal 50 pF load.

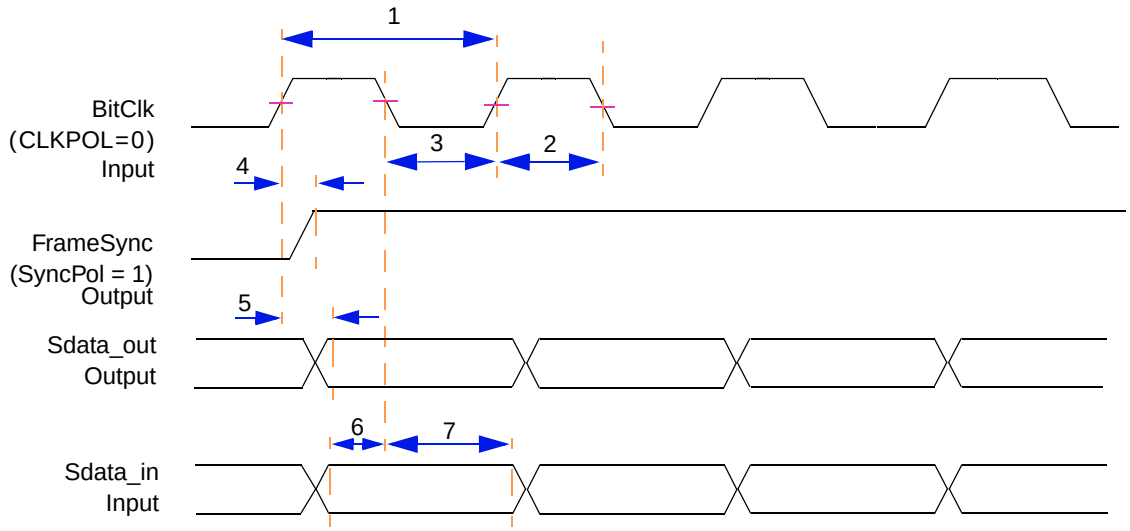

Figure 39. Timing Diagram — AC97 Mode

1.3.16.3 IrDA Mode

Table 45. Timing Specifications — IrDA Transmit Line

Sym	Description	Min	Max	Units	SpecID
1	Pulse high time, defined in the IrDA protocol definition	0.125	10000	µs	A15.22
2	Pulse low time, defined in the IrDA protocol definition	0.125	10000	µs	A15.23
3	Transmitter rising time	—	7.9	ns	A15.24
4	Transmitter falling time	—	7.9	ns	A15.25

NOTE

Output timing is specified at a nominal 50 pF load.

Downloaded from Arrow.com.

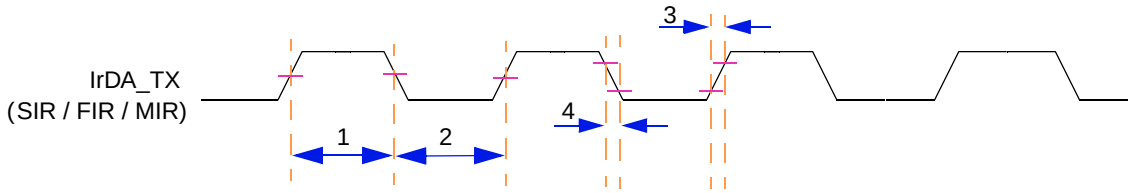

Figure 40. Timing Diagram — IrDA Transmit Line

1.3.16.4 SPI Mode

Table 46. Timing Specifications — SPI Master Mode, Format 0 (CPHA = 0)

Sym	Description	Min	Max	Units	SpecID
1	SCK cycle time, programable in the PSC CCS register	30.0	—	ns	A15.26
2	SCK pulse width, 50% SCK duty cycle	15.0	—	ns	A15.27
3	Slave select clock delay, programable in the PSC CCS register	30.0	—	ns	A15.28
4	Output Data valid after Slave Select ($\overline{SS}$)	—	8.9	ns	A15.29
5	Output Data valid after SCK	—	8.9	ns	A15.30
6	Input Data setup time	6.0	—	ns	A15.31
7	Input Data hold time	1.0	—	ns	A15.32
8	Slave disable lag time	—	8.9	ns	A15.33
9	Sequential Transfer delay, programable in the PSC CTUR / CTLR register	15.0	—	ns	A15.34
10	Clock falling time	—	7.9	ns	A15.35
11	Clock rising time	—	7.9	ns	A15.36

NOTE

Output timing is specified at a nominal 50 pF load.

Downloaded from Arrow.com.

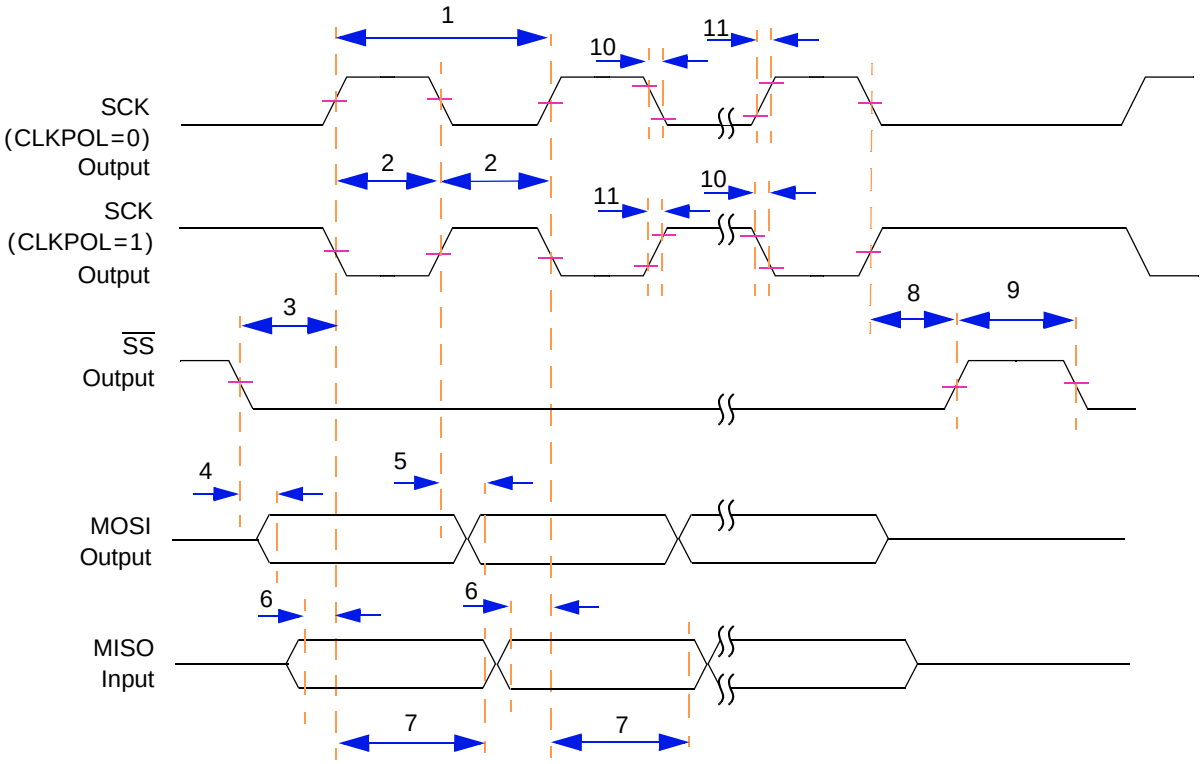

Figure 41. Timing Diagram — SPI Master Mode, Format 0 (CPHA = 0)

Table 47. Timing Specifications — SPI Slave Mode, Format 0 (CPHA = 0)

Sym	Description	Min	Max	Units	SpecID
1	SCK cycle time, programable in the PSC CCS register	30.0	—	ns	A15.37
2	SCK pulse width, 50% SCK duty cycle	15.0	—	ns	A15.38
3	Slave select clock delay	1.0	—	ns	A15.39
4	Input Data setup time	1.0	—	ns	A15.40
5	Input Data hold time	1.0	—	ns	A15.41
6	Output data valid after $\overline{SS}$	—	14.0	ns	A15.42
7	Output data valid after SCK	—	14.0	ns	A15.43
8	Slave disable lag time	0.0	—	ns	A15.44
9	Minimum Sequential Transfer delay = 2 × IP Bus clock cycle time	30.0	—	—	A15.45

NOTE

Output timing is specified at a nominal 50 pF load.

Downloaded from Arrow.com.

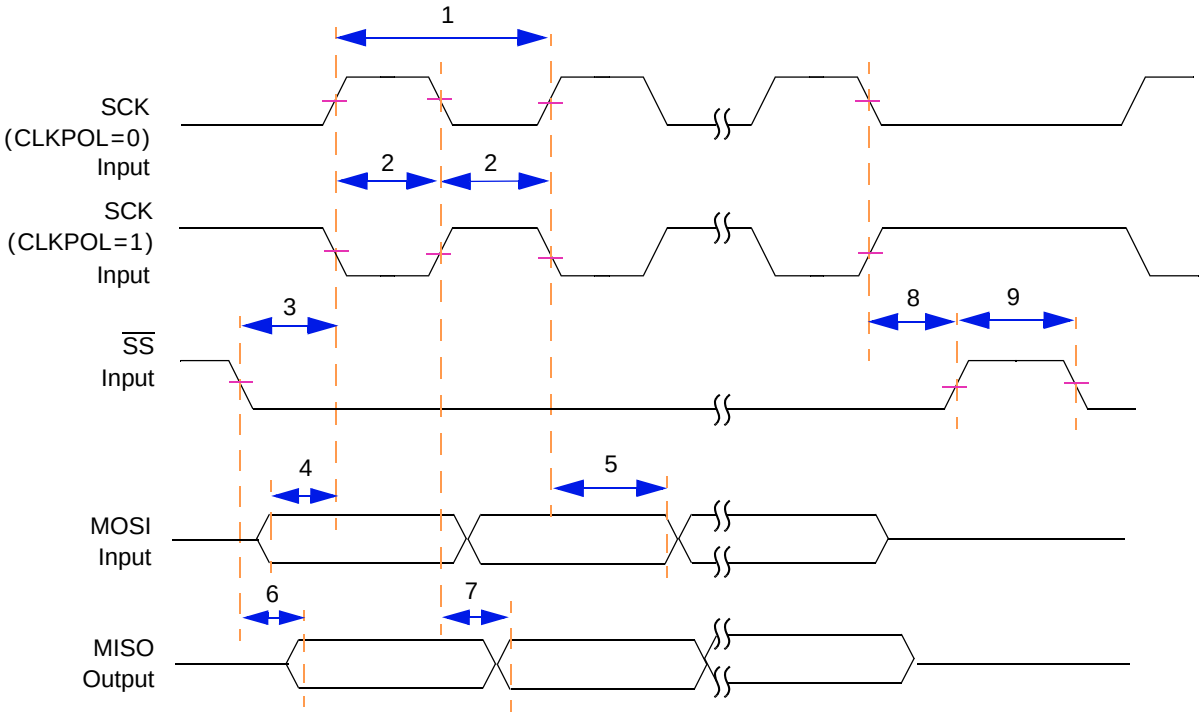

Figure 42. Timing Diagram — SPI Slave Mode, Format 0 (CPHA = 0)

Table 48. Timing Specifications — SPI Master Mode, Format 1 (CPHA = 1)

Sym	Description	Min	Max	Units	SpecID
1	SCK cycle time, programable in the PSC CCS register	30.0	—	ns	A15.46
2	SCK pulse width, 50% SCK duty cycle	15.0	—	ns	A15.47
3	Slave select clock delay, programable in the PSC CCS register	30.0	—	ns	A15.48
4	Output data valid	—	8.9	ns	A15.49
5	Input Data setup time	6.0	—	ns	A15.50
6	Input Data hold time	1.0	—	ns	A15.51
7	Slave disable lag time	—	8.9	ns	A15.52
8	Sequential Transfer delay, programable in the PSC CTUR / CTLR register	15.0	—	ns	A15.53
9	Clock falling time	—	7.9	ns	A15.54
10	Clock rising time	—	7.9	ns	A15.55

NOTE

Output timing is specified at a nominal 50 pF load.

Downloaded from Arrow.com.

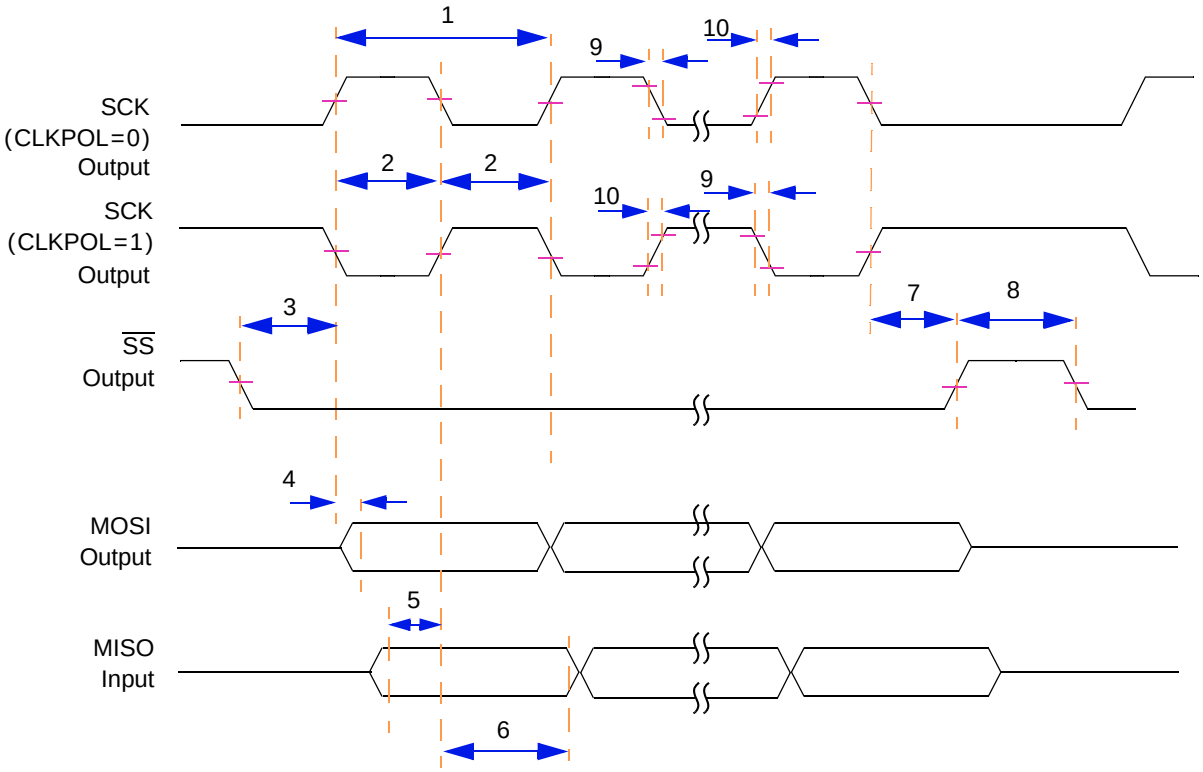

Figure 43. Timing Diagram — SPI Master Mode, Format 1 (CPHA = 1)

Table 49. Timing Specifications — SPI Slave Mode, Format 1 (CPHA = 1)

Sym	Description	Min	Max	Units	SpecID
1	SCK cycle time, programable in the PSC CCS register	30.0	—	ns	A15.56
2	SCK pulse width, 50% SCK duty cycle	15.0	—	ns	A15.57
3	Slave select clock delay	0.0	—	ns	A15.58
4	Output data valid	—	14.0	ns	A15.59
5	Input Data setup time	2.0	—	ns	A15.60
6	Input Data hold time	1.0	—	ns	A15.61
7	Slave disable lag time	0.0	—	ns	A15.62
8	Minimum Sequential Transfer delay = 2 × IP-Bus clock cycle time	30.0	—	ns	A15.63

NOTE

Output timing is specified at a nominal 50 pF load.

Downloaded from Arrow.com.

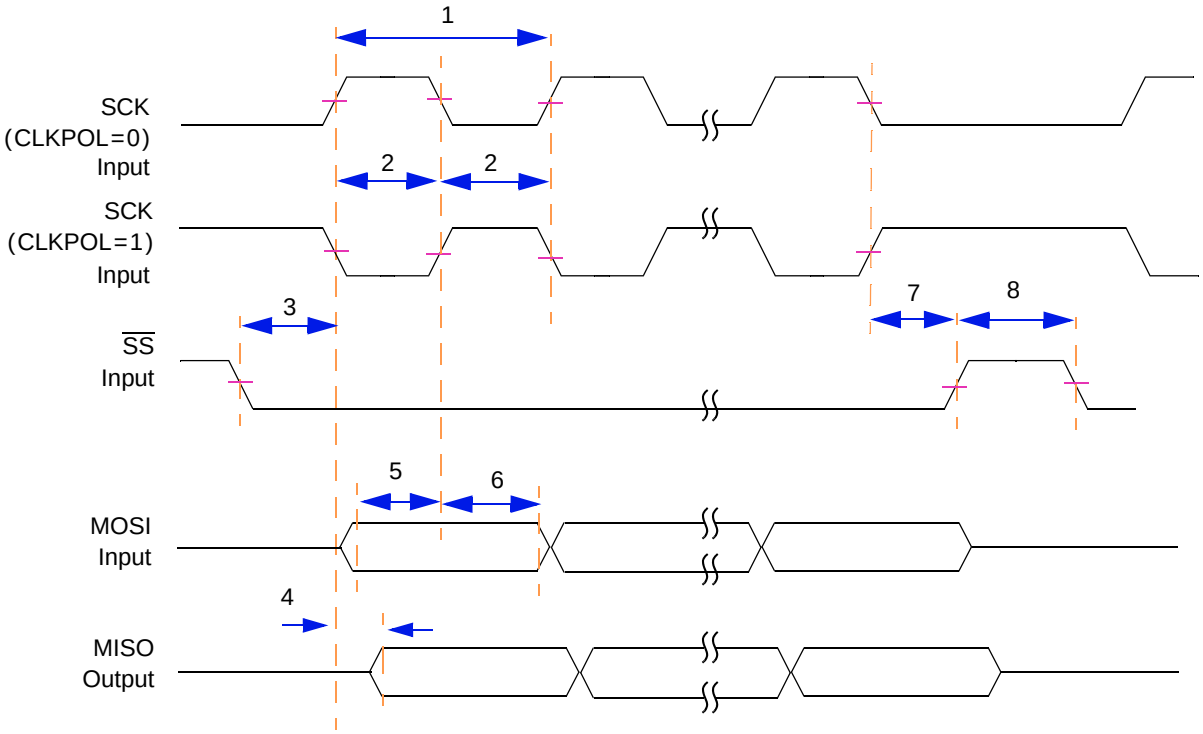

Figure 44. Timing Diagram — SPI Slave Mode, Format 1 (CPHA = 1)

1.3.17 GPIOs and Timers

1.3.17.1 General and Asynchronous Signals

The MPC5200B contains several sets if I/Os that do not require special setup, hold, or valid requirements. Most of these are asynchronous to the system clock. The following numbers are provided for test and validation purposes only, and they assume a 133 MHz internal bus frequency.

Figure 45 shows the GPIO Timing Diagram. Table 50 gives the timing specifications.

Table 50. Asynchronous Signals

Sym	Description	Min	Max	Units	SpecID
t_{CK}	Clock Period	7.52	—	ns	A16.1
t_{IS}	Input Setup	12	—	ns	A16.2
t_{IH}	Input Hold	1	—	ns	A16.3
t_{DV}	Output Valid	—	15.33	ns	A16.4
t_{DH}	Output Hold	1	—	ns	A16.5

Downloaded from Arrow.com.

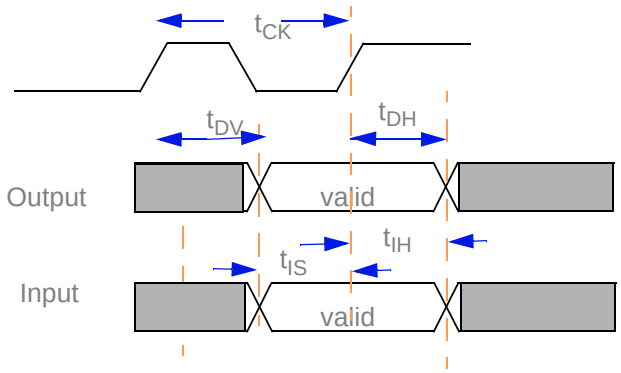

Figure 45. Timing Diagram—Asynchronous Signals

Downloaded from Arrow.com.

1.3.18 IEEE 1149.1 (JTAG) AC Specifications

Table 51. JTAG Timing Specification

Sym	Characteristic	Min	Max	Unit	SpecID
—	TCK frequency of operation.	0	25	MHz	A17.1
1	TCK cycle time.	40	—	ns	A17.2
2	TCK clock pulse width measured at 1.5V.	1.08	—	ns	A17.3
3	TCK rise and fall times.	0	3	ns	A17.4
4	$\overline{\text{TRST}}$ setup time to tck falling edge[(1)].	10	—	ns	A17.5
5	$\overline{\text{TRST}}$ assert time.	5	—	ns	A17.6
6	Input data setup time[(2)].	5	—	ns	A17.7
7	Input data hold time[(2)].	15	—	ns	A17.8
8	TCK to output data valid[(3)].	0	30	ns	A17.9
9	TCK to output high impedance[(3)].	0	30	ns	A17.10
10	TMS, TDI data setup time.	5	—	ns	A17.11
11	TMS, TDI data hold time.	1	—	ns	A17.12
12	TCK to TDO data valid.	0	15	ns	A17.13
13	TCK to TDO high impedance.	0	15	ns	A17.14

1 $\overline{\text{TRST}}$ is an asynchronous signal. The setup time is for test purposes only.
2 Non-test, other than TDI and TMS, signal input timing with respect to TCK.
3 Non-test, other than TDO, signal output timing with respect to TCK.

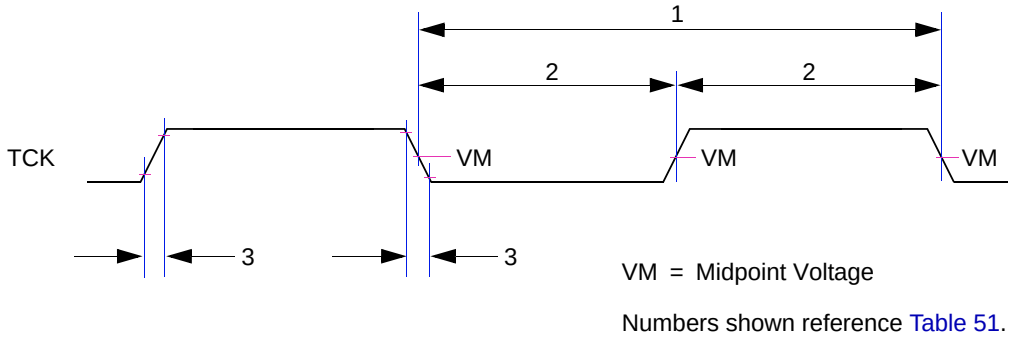

Figure 46. Timing Diagram—JTAG Clock Input

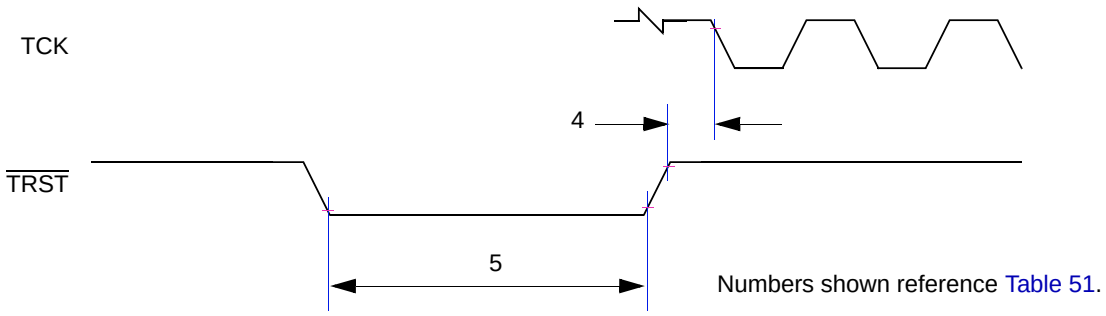

Figure 47. Timing Diagram—JTAG TRST

Downloaded from Arrow.com.

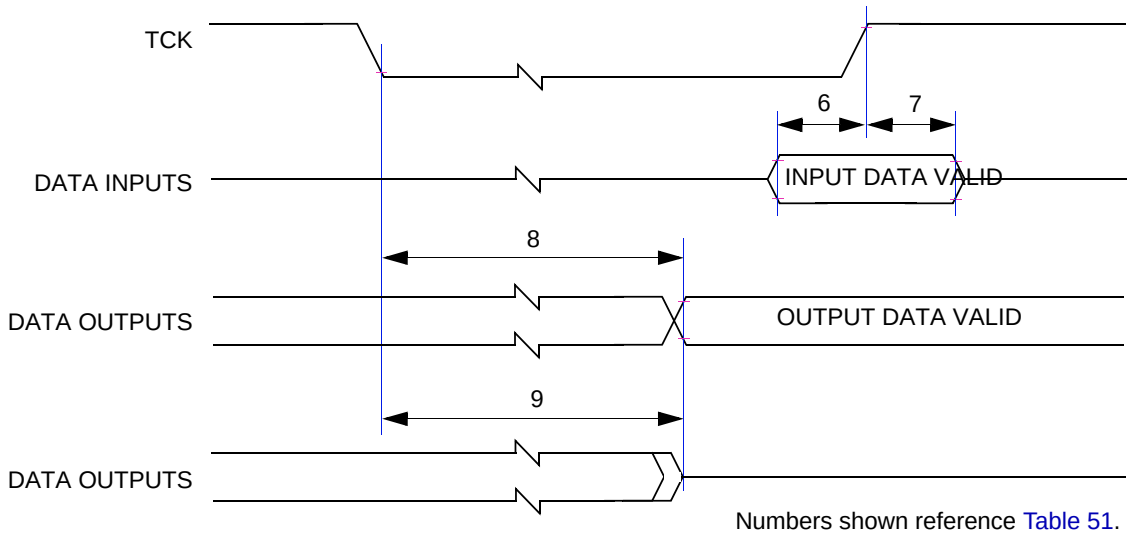

Figure 48. Timing Diagram—JTAG Boundary Scan

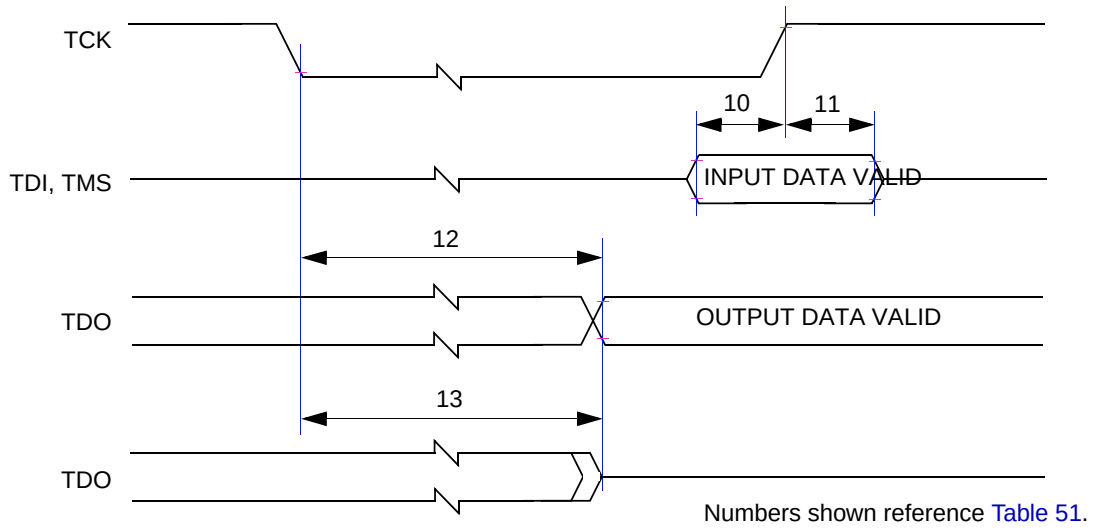

Figure 49. Timing Diagram—Test Access Port

2 Package Description

2.1 Package Parameters

The MPC5200B uses a 27 mm x 27 mm TE-PBGA package. The package parameters are as provided in the following list:

- Package outline: 27 mm x 27 mm
- Interconnects: 2
- Pitch: 1.27 mm

Downloaded from Arrow.com.

2.2 Mechanical Dimensions

Figure 50 provides the mechanical dimensions, top surface, side profile, and pinout for the MPC5200B, 272 TE-PBGA package.

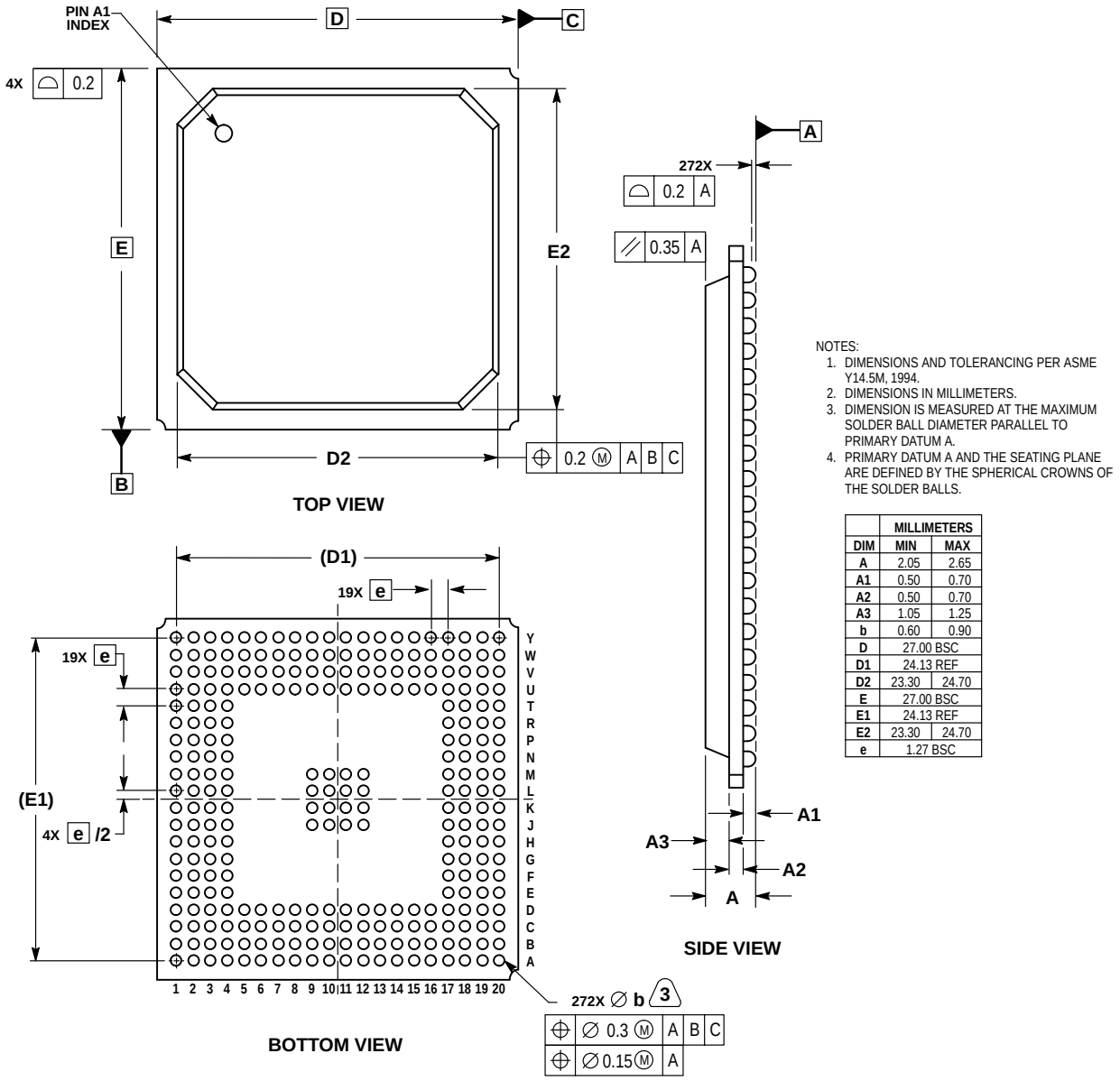

NOTES:
1. DIMENSIONS AND TOLERANCING PER ASME Y14.5M, 1994.
2. DIMENSIONS IN MILLIMETERS.
3. DIMENSION IS MEASURED AT THE MAXIMUM SOLDER BALL DIAMETER PARALLEL TO PRIMARY DATUM A.
4. PRIMARY DATUM A AND THE SEATING PLANE ARE DEFINED BY THE SPHERICAL CROWNS OF THE SOLDER BALLS.

	MILLIMETERS	
DIM	MIN	MAX
A	2.05	2.65
A1	0.50	0.70
A2	0.50	0.70
A3	1.05	1.25
b	0.60	0.90
D	27.00 BSC	
D1	24.13 REF	
D2	23.30	24.70
E	27.00 BSC	
E1	24.13 REF	
E2	23.30	24.70
e	1.27 BSC	

CASE 1135A–01
ISSUE B

Figure 50. Mechanical Dimensions and Pinout Assignments for the MPC5200B, 272 TE-PBGA

Downloaded from Arrow.com.

2.3 Pinout Listings

See details in the *MPC5200B User's Manual (MPC5200BUM)*.

Table 52. MPC5200B Pinout Listing

Name	Alias	Type	Power Supply	Output Driver Type	Input Type	Pull-up/ down
SDRAM						
$\overline{\text{MEM_CAS}}$	CAS	I/O	VDD_MEM_IO	DRV16_MEM	TTL	
MEM_CLK_EN	CLK_EN	I/O	VDD_MEM_IO	DRV16_MEM	TTL	
$\overline{\text{MEM_CS}}$		I/O	VDD_MEM_IO	DRV16_MEM	TTL	
MEM_DQM[3:0]	DQM	I/O	VDD_MEM_IO	DRV16_MEM	TTL	
MEM_MA[12:0]	MA	I/O	VDD_MEM_IO	DRV16_MEM	TTL	
MEM_MBA[1:0]	MBA	I/O	VDD_MEM_IO	DRV16_MEM	TTL	
MEM_MDQS[3:0]	MDQS	I/O	VDD_MEM_IO	DRV16_MEM	TTL	
MEM_MDQ[31:0]	MDQ	I/O	VDD_MEM_IO	DRV16_MEM	TTL	
MEM_CLK		I/O	VDD_MEM_IO	DRV16_MEM	TTL	
MEM_CLK		I/O	VDD_MEM_IO	DRV16_MEM	TTL	
$\overline{\text{MEM_RAS}}$	RAS	I/O	VDD_MEM_IO	DRV16_MEM	TTL	
$\overline{\text{MEM_WE}}$		I/O	VDD_MEM_IO	DRV16_MEM	TTL	
PCI						
EXT_AD[31:0]		I/O	VDD_IO	PCI	PCI	
PCI_CBE_0		I/O	VDD_IO	PCI	PCI	
PCI_CBE_1		I/O	VDD_IO	PCI	PCI	
PCI_CBE_2		I/O	VDD_IO	PCI	PCI	
PCI_CBE_3		I/O	VDD_IO	PCI	PCI	
PCI_CLOCK		I/O	VDD_IO	PCI	PCI	
PCI_DEVSEL		I/O	VDD_IO	PCI	PCI	
PCI_FRAME		I/O	VDD_IO	PCI	PCI	
PCI_GNT		I/O	VDD_IO	DRV8	TTL	
PCI_IDSEL		I/O	VDD_IO	DRV8	TTL	
PCI_IRDY		I/O	VDD_IO	PCI	PCI	
PCI_PAR		I/O	VDD_IO	PCI	PCI	
PCI_PERR		I/O	VDD_IO	PCI	PCI	
PCI_REQ		I/O	VDD_IO	DRV8	TTL	
PCI_RESET		I/O	VDD_IO	PCI	PCI	
PCI_SERR		I/O	VDD_IO	PCI	PCI	
PCI_STOP		I/O	VDD_IO	PCI	PCI	

Downloaded from Arrow.com.

Table 52. MPC5200B Pinout Listing (continued)

Name	Alias	Type	Power Supply	Output Driver Type	Input Type	Pull-up/ down
PCI_TRDY		I/O	VDD_IO	PCI	PCI	
Local Plus						
LP_ACK		I/O	VDD_IO	DRV8	TTL	PULLUP
LP_ALE		I/O	VDD_IO	DRV8	TTL	
LP_OE		I/O	VDD_IO	DRV8	TTL	
LP_RW		I/O	VDD_IO	DRV8	TTL	
LP_TS		I/O	VDD_IO	DRV8	TTL	
LP_CS0		I/O	VDD_IO	DRV8	TTL	
LP_CS1		I/O	VDD_IO	DRV8	TTL	
LP_CS2		I/O	VDD_IO	DRV8	TTL	
LP_CS3		I/O	VDD_IO	DRV8	TTL	
LP_CS4		I/O	VDD_IO	DRV8	TTL	
LP_CS5		I/O	VDD_IO	DRV8	TTL	
ATA						
ATA_DACK		I/O	VDD_IO	DRV8	TTL	
ATA_DRQ		I/O	VDD_IO	DRV8	TTL	PULLDOWN
ATA_INTRQ		I/O	VDD_IO	DRV8	TTL	PULLDOWN
ATA_IOCHRDY		I/O	VDD_IO	DRV8	TTL	PULLUP
ATA_IOR		I/O	VDD_IO	DRV8	TTL	
ATA_IOW		I/O	VDD_IO	DRV8	TTL	
ATA_ISOLATION		I/O	VDD_IO	DRV8	TTL	
Ethernet						
ETH_0	TX, TX_EN	I/O	VDD_IO	DRV4	TTL	
ETH_1	RTS, TXD[0]	I/O	VDD_IO	DRV4	TTL	
ETH_2	USB_TXP, RTX, TXD[1]	I/O	VDD_IO	DRV4	TTL	
ETH_3	USB_PRTPWR, TXD[2]	I/O	VDD_IO	DRV4	TTL	
ETH_4	USB_SPEED, TXD[3]	I/O	VDD_IO	DRV4	TTL	
ETH_5	USB_SUPEND, TX_ER	I/O	VDD_IO	DRV4	TTL	
ETH_6	USB_OE, RTS, MDC	I/O	VDD_IO	DRV4	TTL	
ETH_7	TXN, MDIO	I/O	VDD_IO	DRV4	TTL	

Downloaded from Arrow.com.

Table 52. MPC5200B Pinout Listing (continued)

Name	Alias	Type	Power Supply	Output Driver Type	Input Type	Pull-up/ down
ETH_8	RX_DV	I/O	VDD_IO	DRV4	TTL	
ETH_9	CD, RX_CLK	I/O	VDD_IO	DRV4	Schmitt	
ETH_10	CTS, COL	I/O	VDD_IO	DRV4	TTL	
ETH_11	TX_CLK	I/O	VDD_IO	DRV4	Schmitt	
ETH_12	RXD[0]	I/O	VDD_IO	DRV4	TTL	
ETH_13	USB_RXD, CTS, RXD[1]	I/O	VDD_IO	DRV4	TTL	
ETH_14	USB_RXP, UART_RX, RXD[2]	I/O	VDD_IO	DRV4	TTL	
ETH_15	USB_RXN, RX, RXD[3]	I/O	VDD_IO	DRV4	TTL	
ETH_16	USB_OVRCNT, CTS, RX_ER	I/O	VDD_IO	DRV4	TTL	
ETH_17	CD, CRS	I/O	VDD_IO	DRV4	TTL	
IRDA						
PSC6_0	IRDA_RX, RxD	I/O	VDD_IO	DRV4	TTL	
PSC6_1	Frame, CTS	I/O	VDD_IO	DRV4	TTL	
PSC6_2	IRDA_TX, TxD	I/O	VDD_IO	DRV4	TTL	
PSC6_3	IR_USB_CLK,BitClk, RTS	I/O	VDD_IO	DRV4	Schmitt	
USB						
USB_0	USB_OE	I/O	VDD_IO	DRV4	TTL	
USB_1	USB_TXN	I/O	VDD_IO	DRV4	TTL	
USB_2	USB_TXP	I/O	VDD_IO	DRV4	TTL	
USB_3	USB_RXD	I/O	VDD_IO	DRV4	TTL	
USB_4	USB_RXP	I/O	VDD_IO	DRV4	TTL	
USB_5	USB_RXN	I/O	VDD_IO	DRV4	TTL	
USB_6	USB_PRTPWR	I/O	VDD_IO	DRV4	TTL	
USB_7	USB_SPEED	I/O	VDD_IO	DRV4	TTL	
USB_8	USB_SUPEND	I/O	VDD_IO	DRV4	TTL	
USB_9	USB_OVRCNT	I/O	VDD_IO	DRV4	TTL	
I^2C						
I2C_0	SCL	I/O	VDD_IO	DRV4	Schmitt	
I2C_1	SDA	I/O	VDD_IO	DRV4	Schmitt	
I2C_2	SCL	I/O	VDD_IO	DRV4	Schmitt	

Downloaded from Arrow.com.

Table 52. MPC5200B Pinout Listing (continued)

Name	Alias	Type	Power Supply	Output Driver Type	Input Type	Pull-up/ down
I2C_3	SDA	I/O	VDD_IO	DRV4	Schmitt	
PSC						
PSC1_0	TxD, Sdata_out, MOSI, TX	I/O	VDD_IO	DRV4	TTL	
PSC1_1	RxD, Sdata_in, MISO, TX	I/O	VDD_IO	DRV4	TTL	
PSC1_2	Mclk, Sync, RTS	I/O	VDD_IO	DRV4	TTL	
PSC1_3	BitClk, SCK, CTS	I/O	VDD_IO	DRV4	Schmitt	
PSC1_4	Frame, $\overline{SS}$, CD	I/O	VDD_IO	DRV4	TTL	
PSC2_0	TxD, Sdata_out, MOSI, TX	I/O	VDD_IO	DRV4	TTL	
PSC2_1	RxD, Sdata_in, MISO, TX	I/O	VDD_IO	DRV4	TTL	
PSC2_2	Mclk, Sync, RTS	I/O	VDD_IO	DRV4	TTL	
PSC2_3	BitClk, SCK, CTS	I/O	VDD_IO	DRV4	Schmitt	
PSC2_4	Frame, $\overline{SS}$, CD	I/O	VDD_IO	DRV4	TTL	
PSC3_0	USB_OE, TxDS, TX	I/O	VDD_IO	DRV4	TTL	
PSC3_1	USB_TXN, RxD, RX	I/O	VDD_IO	DRV4	TTL	
PSC3_2	USB_TXP, BitClk, RTS	I/O	VDD_IO	DRV4	Schmitt	
PSC3_3	USB_RXD, Frame, $\overline{SS}$, CTS	I/O	VDD_IO	DRV4	TTL	
PSC3_4	USB_RXP, CD	I/O	VDD_IO	DRV4	TTL	
PSC3_5	USB_RXN	I/O	VDD_IO	DRV4	TTL	
PSC3_6	USB_PRTPWR, Mclk, MOSI	I/O	VDD_IO	DRV4	TTL	
PSC3_7	USB_SPEED. MISO	I/O	VDD_IO	DRV4	TTL	
PSC3_8	USB_SUPEND, $\overline{SS}$	I/O	VDD_IO	DRV4	TTL	
PSC3_9	USB_OVRCNT, SCK	I/O	VDD_IO	DRV4	TTL	
GPIO/TIMER						
GPIO_WKUP_6	MEM_CS1	I/O	VDD_MEM_IO	DRV16_MEM	TTL	PULLUP_MEM
GPIO_WKUP_7		I/O	VDD_IO	DRV8	TTL	
TIMER_0		I/O	VDD_IO	DRV4	TTL	

Downloaded from Arrow.com.

Table 52. MPC5200B Pinout Listing (continued)

Name	Alias	Type	Power Supply	Output Driver Type	Input Type	Pull-up/ down
TIMER_1		I/O	VDD_IO	DRV4	TTL	
TIMER_2	MOSI	I/O	VDD_IO	DRV4	TTL	
TIMER_3	MISO	I/O	VDD_IO	DRV4	TTL	
TIMER_4	SS	I/O	VDD_IO	DRV4	TTL	
TIMER_5	SCK	I/O	VDD_IO	DRV4	TTL	
TIMER_6		I/O	VDD_IO	DRV4	TTL	
TIMER_7		I/O	VDD_IO	DRV4	TTL	
Clock						
SYS_XTAL_IN		Input	VDD_IO			
SYS_XTAL_OUT		Output	VDD_IO			
RTC_XTAL_IN		Input	VDD_IO			
RTC_XTAL_OUT		Output	VDD_IO			
Misc						
PORRESET		Input	VDD_IO	DRV4	Schmitt	
HRESET		I/O	VDD_IO	DRV8_OD[1]	Schmitt	
SRESET		I/O	VDD_IO	DRV8_OD[1]	Schmitt	
IRQ0		I/O	VDD_IO	DRV4	TTL	
IRQ1		I/O	VDD_IO	DRV4	TTL	
IRQ2		I/O	VDD_IO	DRV4	TTL	
IRQ3		I/O	VDD_IO	DRV4	TTL	
Test/Configuration						
SYS_PLL_TPA		I/O	VDD_IO	DRV4	TTL	
TEST_MODE_0		Input	VDD_IO	DRV4	TTL	
TEST_MODE_1		Input	VDD_IO	DRV4	TTL	
TEST_SEL_0		I/O	VDD_IO	DRV4	TTL	PULLUP
TEST_SEL_1		I/O	VDD_IO	DRV8	TTL	
JTAG_TCK	TCK	Input	VDD_IO	DRV4	Schmitt	PULLUP
JTAG_TDI	TDI	Input	VDD_IO	DRV4	TTL	PULLUP
JTAG_TDO	TDO	I/O	VDD_IO	DRV8	TTL	
JTAG_TMS	TMS	Input	VDD_IO	DRV4	TTL	PULLUP
JTAG_TRST	TRST	Input	VDD_IO	DRV4	TTL	PULLUP
Power and Ground						
VDD_IO		—				

Downloaded from Arrow.com.

Table 52. MPC5200B Pinout Listing (continued)

Name	Alias	Type	Power Supply	Output Driver Type	Input Type	Pull-up/ down
VDD_MEM_IO		—				
VDD_CORE		—				
VSS_IO/CORE		—				
SYS_PLL_AVDD		—				
CORE_PLL_AVDD		—				

[1] All “open drain” outputs of the MPC5200B are actually regular three-state output drivers with the output data tied low and the output enable controlled. Thus, unlike a true open drain, there is a current path from the external system to the MPC5200B I/O power rail if the external signal is driven above the MPC5200B I/O power rail voltage.

3 System Design Information

3.1 Power Up/Down Sequencing

Figure 51 shows situations in sequencing the I/O VDD (VDD_IO), Memory VDD (VDD_IO_MEM), PLL VDD (PLL_AVDD), and Core VDD (VDD_CORE).

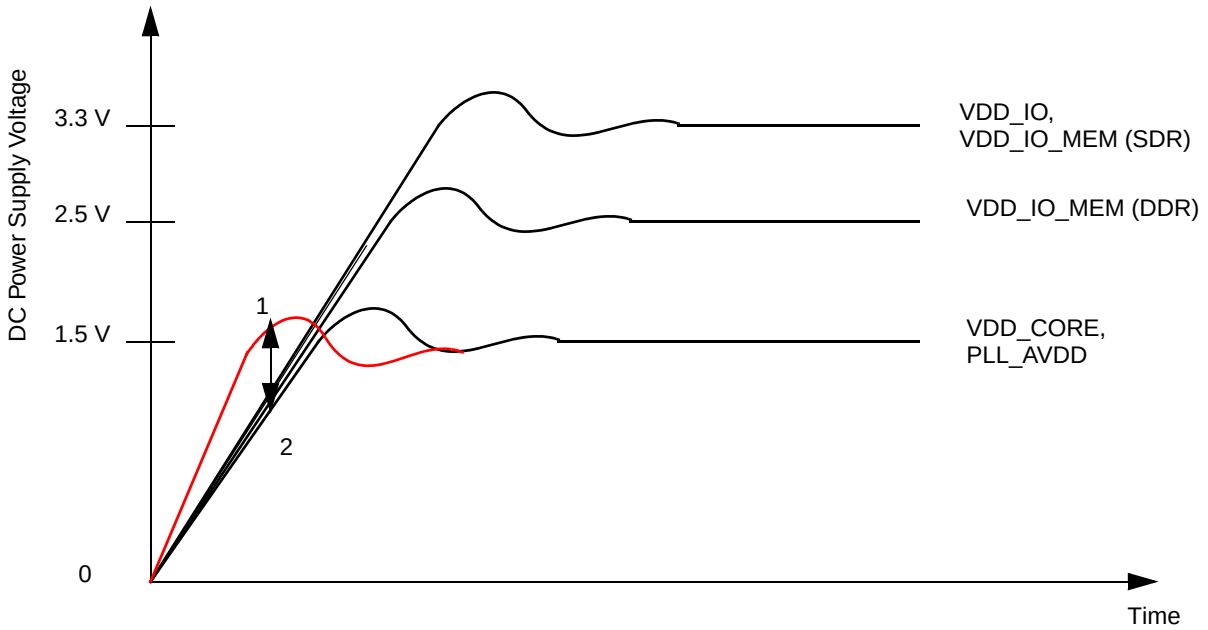

Note: VDD_CORE should not exceed VDD_IO, VDD_IO_MEM or PLL_AVDD by more than 0.4 V at any time, including power-up.

Note: It is recommended that VDD_CORE/PLL_AVDD should track VDD_IO/VDD_IO_MEM up to 0.9 V then separate for completion of ramps.

Note: Input voltage must not be greater than the supply voltage (VDD_IO) VDD_IO_MEM, VDD_CORE, or PLL_AVDD) by more than 0.5 V at any time, including during power-up.

Note: Use 1 microsecond or slower rise time for all supplies.

Figure 51. Supply Voltage Sequencing

Downloaded from Arrow.com.

The relationship between VDD_IO_MEM and VDD_IO is non-critical during power-up and power-down sequences. VDD_IO_MEM (2.5 V or 3.3 V) and VDD_IO are specified relative to VDD_CORE.

3.1.1 Power Up Sequence

If VDD_IO/VDD_IO_MEM are powered up with the VDD_CORE at 0 V, the sense circuits in the I/O pads cause all pad output drivers connected to the VDD_IO/VDD_IO_MEM to be in a high-impedance state. There is no limit to how long after VDD_IO/VDD_IO_MEM powers up before VDD_CORE must power up. VDD_CORE should not lead the VDD_IO, VDD_IO_MEM or PLL_AVDD by more than 0.4 V during power ramp up or there will be high current in the internal ESD protection diodes. The rise times on the power supplies should be slower than 1 microsecond to avoid turning on the internal ESD protection clamp diodes.

The recommended power up sequence is as follows:

Use one microsecond or slower rise time for all supplies.

VDD_CORE/PLL_AVDD and VDD_IO/VDD_IO_MEM should track up to 0.9 V and then separate for the completion of ramps with VDD_IO/VDD_IO_MEM going to the higher external voltages. One way to accomplish this is to use a low drop-out voltage regulator.

3.1.2 Power Down Sequence

If VDD_CORE/PLL_AVDD are powered down first, sense circuits in the I/O pads cause all output drivers to be in a high impedance state. There is no limit on how long after VDD_CORE and PLL_AVDD power down before VDD_IO or VDD_IO_MEM must power down. VDD_CORE should not lag VDD_IO, VDD_IO_MEM, or PLL_AVDD going low by more than 0.5 V during power down or there will be undesired high current in the ESD protection diodes. There are no requirements for the fall times of the power supplies.

The recommended power down sequence is as follows:

1. Drop VDD_CORE/PLL_AVDD to 0 V.
2. Drop VDD_IO/VDD_IO_MEM supplies.

3.2 System and CPU Core AVDD Power Supply Filtering

Each of the independent PLL power supplies require filtering external to the device. The following drawing is a recommendation for the required filter circuit.

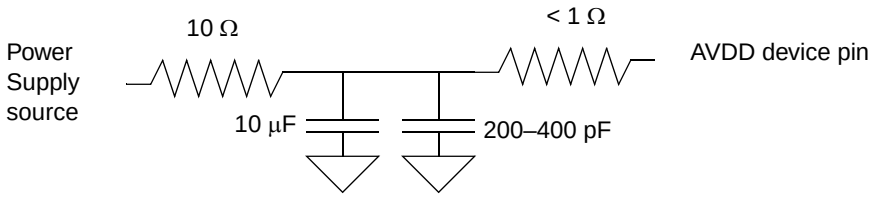

Figure 52. Power Supply Filtering

3.3 Pull-up/Pull-down Resistor Requirements

The MPC5200B requires external pull-up or pull-down resistors on certain pins.

3.3.1 Pull-down Resistor Requirements for TEST pins

The MPC5200B requires pull-down resistors on the test pins TEST_MODE_0, TEST_MODE_1, TEST_SEL_1.

Downloaded from Arrow.com.

3.3.2 Pull-up Requirements for the PCI Control Lines

If the PCI interface is NOT used (and internally disabled) the PCI control pins must be terminated as indicated by the PCI Local Bus specification. This is also required for MOST/Graphics and Large Flash Mode.

PCI control signals always require pull-up resistors on the motherboard (not the expansion board) to ensure that they contain stable values when no agent is actively driving the bus. This includes PCI_FRAME, PCI_TRDY, PCI_IRDY, PCI_DEVSEL, PCI_STOP, PCI_SERR, PCI_PERR, and PCI_REQ.

3.3.3 Pull-up/Pull-down Requirements for MEM_MDQS Pins (SDRAM)

The MEM_MDQS[3:0] signals are not used with SDR memories and require pull-up or pull-down resistors in SDRAM mode.

3.3.4 .Pull-up/Pull-down Requirements for MEM_MDQS Pins (DDR 16-bit Mode)

The MEM_MDQS[1:0] signals are not used in DDR 16-bit mode and require pull-down resistors.

3.4 JTAG

The MPC5200B provides the user an IEEE 1149.1 JTAG interface to facilitate board/system testing. It also provides a Common On-Chip Processor (COP) Interface, which shares the IEEE 1149.1 JTAG port. The COP Interface provides access to the MPC5200B's embedded Freescale (formerly Motorola) MPC603e e300 processor. This interface provides a means for executing test routines and for performing software development and debug functions.

3.4.1 $\overline{\text{JTAG_TRST}}$

Boundary scan testing is enabled through the JTAG interface signals. The $\overline{\text{JTAG_TRST}}$ signal is optional in the IEEE 1149.1 specification but is provided on all processors that implement the PowerPC architecture. To obtain a reliable power-on reset performance, the JTAG_TRST signal must be asserted during power-on reset.

3.4.1.1 $\overline{\text{JTAG_TRST}}$ and $\overline{\text{PORRESET}}$

The JTAG interface can control the direction of the MPC5200B I/O pads via the boundary scan chain. The JTAG module must be reset before the MPC5200B comes out of power-on reset; do this by asserting JTAG_TRST before $\overline{\text{PORRESET}}$ is released.

For more details refer to the Reset and JTAG Timing Specification.

Figure 53. $\overline{\text{PORRESET}}$ vs. $\overline{\text{JTAG_TRST}}$

3.4.1.2 Connecting JTAG_TRST

The wiring of the $\overline{\text{JTAG_TRST}}$ depends on the existence of a board-related debug interface. (see below)

Downloaded from Arrow.com.

Normally this interface is implemented, using a COP (common on-chip processor) connector. The COP allows a remote computer system (typically, a PC with dedicated hardware and debugging software) to access and control the internal operations of the MPC5200B.

3.4.2 e300 COP/BDM Interface

There are two possibilities to connect the JTAG interface: using it with a COP connector and without a COP connector.

3.4.2.1 Boards Interfacing the JTAG Port via a COP Connector

The MPC5200B functional pin interface and internal logic provides access to the embedded e300 processor core through the Freescale (formerly Motorola) standard COP/BDM interface. Table 53 gives the COP/BDM interface signals. The pin order shown reflects only the COP/BDM connector order.

Table 53. COP/BDM Interface Signals

BDM Pin #	MPC5200B I/O Pin	BDM Connector	Internal Pull Up/Down	External Pull Up/Down	I/O[1]
16	—	GND	—	—	—
15	TEST_SEL_0	ckstp_out	—	—	I
14	—	KEY	—	—	—
13	HRESET	hreset	—	10k Pull-Up	O
12	—	GND	—	—	—
11	SRESET	sreset	—	10k Pull-Up	O
10	—	N/C	—	—	—
9	JTAG_TMS	tms	100k Pull-Up	10k Pull-Up	O
8	—	N/C	—	—	—
7	JTAG_TCK	tck	100k Pull-Up	10k Pull-Up	O
6	—	VDD[2]	—	—	—
5	—	halted[3]	—	—	I
4	JTAG_TRST	trst	100k Pull-Up	10k Pull-Up	O
3	JTAG_TDI	tdi	100k Pull-Up	10k Pull-Up	O
2	—	qack[4]	—	—	O
1	JTAG_TDO	tdo	—	—	I

1 With respect to the emulator tool's perspective, Input is really an output from the embedded e300 core and output is really an input to the core.

2 From the board under test, power sense for chip power.

3 HALTED is not available from e300 core.

4 Input to the e300 core to enable/disable soft-stop condition during breakpoints. MPC5200B internally ties CORE_QACK to GND in its normal/functional mode (always asserted).

For a board with a COP (common on-chip processor) connector, which accesses the JTAG interface and which needs to reset the JTAG module, simply wiring $\overline{\text{JTAG_TRST}}$ and $\overline{\text{PORRESET}}$ is not recommended.

Downloaded from Arrow.com.

To reset the MPC5200B via the COP connector, the $\overline{\text{HRESET}}$ pin of the COP should be connected to the $\overline{\text{HRESET}}$ pin of the MPC5200B. The circuitry shown in Figure 54 allows the COP to assert $\overline{\text{HRESET}}$ or $\overline{\text{JTAG_TRST}}$ separately, while any other board sources can drive $\overline{\text{PORRESET}}$.

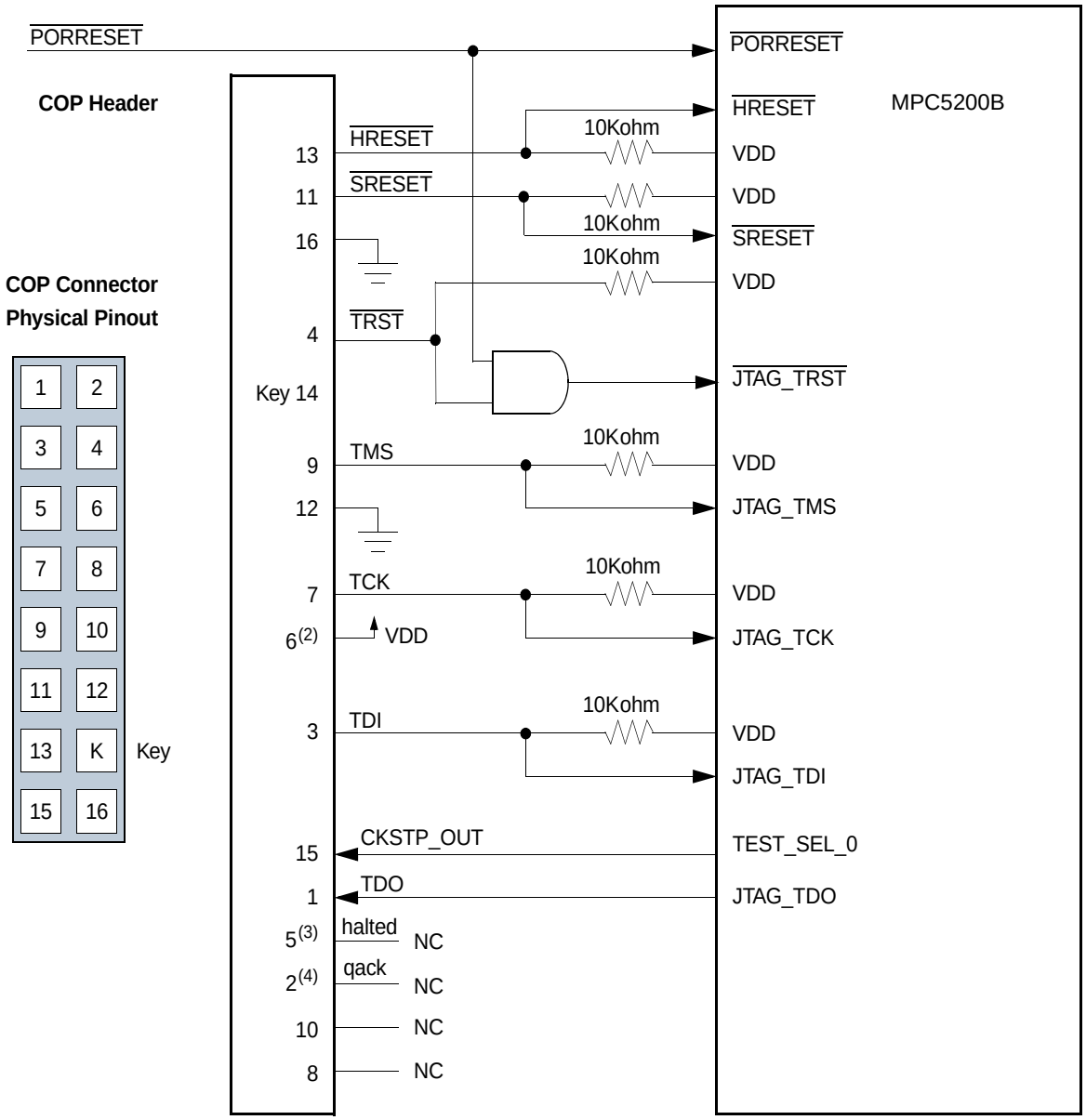

Figure 54. COP Connector Diagram

3.4.2.2 Boards Without COP Connector

If the JTAG interface is not used, $\overline{\text{JTAG_TRST}}$ should be tied to $\overline{\text{PORRESET}}$, so that it is asserted when the system reset signal ($\overline{\text{PORRESET}}$) is asserted. This ensures that the JTAG scan chain is initialized during power on. Figure 55 shows the connection of the JTAG interface without COP connector.

Downloaded from Arrow.com.

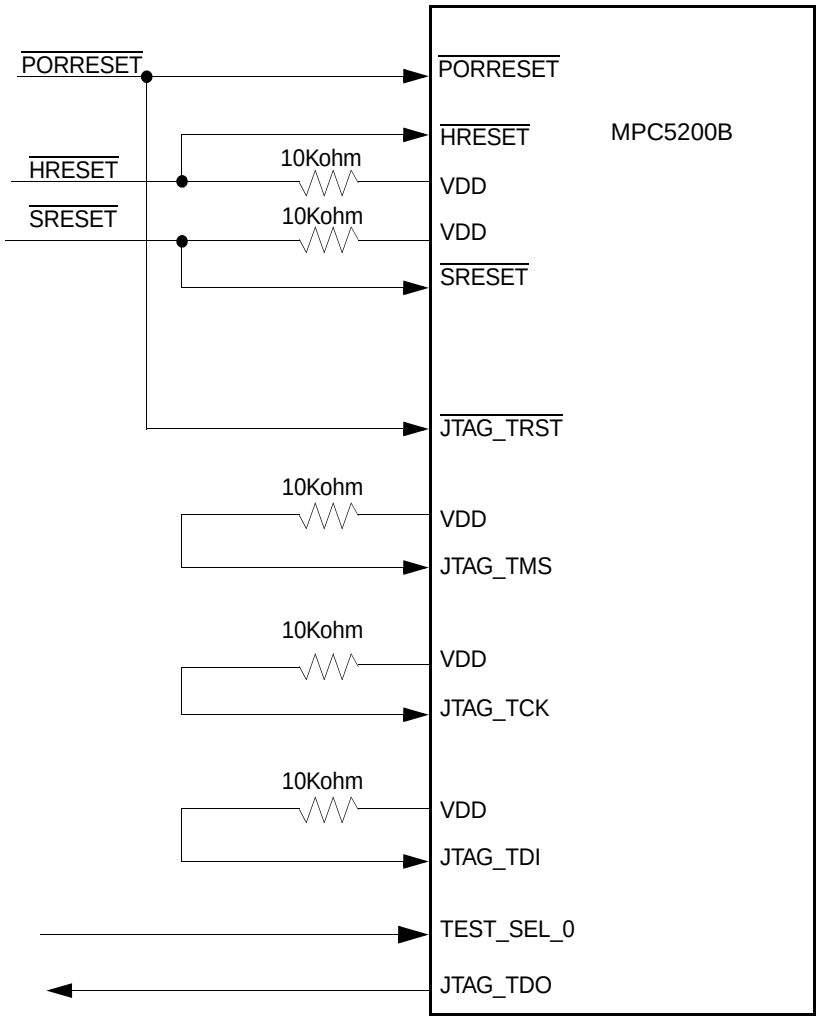

Figure 55. $\overline{\text{JTAG_TRST}}$ Wiring for Boards without COP Connector

4 Ordering Information

Table 54. Ordering Information

Part Number[1]	Speed	Ambient Temp	Qualification[2]	Packaging[3]
MPC5200VR400B	400	0 °C to 70 °C	Commercial	RoHS & Pb-free
MPC5200CVR466B	400	–40 °C to 85 °C	Industrial	RoHS & Pb-free
SPC5200CBV400B	400	–40 °C to 85 °C	Automotive – AEC	Standard
SPC5200CVR400B	400	–40 °C to 85 °C	Automotive – AEC	RoHS & Pb-free
SC103335VR400B	400	–40 °C to 85 °C	Automotive – AEC	RoHS & Pb-free

1 Shipped in trays. Add “R2” suffix for Tape & Reel.

2 Commercial Qualified to < 250 PPM level. Industrial/Automotive Qualified to AEC-Q100. Automotive has Zero Defect flow.

3 Standard is halide-free with Pb solder balls.

Downloaded from Arrow.com.

5 Document Revision History

Table 55 provides a revision history for this hardware specification.

Table 55. Document Revision History

Rev. No.	Differences
1	Clock Frequencies table: 466 MHz was changed to 400 MHz for the e300 Processor Core
2	Added description for PCI CLK Slew Rate for PCI CLK Specifications table.
	Added description for minimum rates in the DDR SDRAM Memory Write Timing table.
3	Added one item to table “DDR SDRAM Memory Read Timing.”
4	Updated table “Ordering Information.”

Downloaded from Arrow.com.

Downloaded from Arrow.com.

How to Reach Us:

Home Page:
www.freescale.com

Web Support:
http://www.freescale.com/support

USA/Europe or Locations Not Listed:
Freescale Semiconductor, Inc.
Technical Information Center, EL516
2100 East Elliot Road
Tempe, Arizona 85284
1-800-521-6274 or +1-480-768-2130
www.freescale.com/support

Europe, Middle East, and Africa:
Freescale Halbleiter Deutschland GmbH
Technical Information Center
Schatzbogen 7
81829 Muenchen, Germany
+44 1296 380 456 (English)
+46 8 52200080 (English)
+49 89 92103 559 (German)
+33 1 69 35 48 48 (French)
www.freescale.com/support

Japan:
Freescale Semiconductor Japan Ltd.
Headquarters
ARCO Tower 15F
1-8-1, Shimo-Meguro, Meguro-ku,
Tokyo 153-0064
Japan
0120 191014 or +81 3 5437 9125
support.japan@freescale.com

Asia/Pacific:
Freescale Semiconductor China Ltd.
Exchange Building 23F
No. 118 Jianguo Road
Chaoyang District
Beijing 100022
China
+86 10 5879 8000
support.asia@freescale.com

Freescale Semiconductor Literature Distribution Center
P.O. Box 5405
Denver, Colorado 80217
1-800-441-2447 or +1-303-675-2140
Fax: +1-303-675-2150
LDCForFreescaleSemiconductor@hibbertgroup.com

Document Number: MPC5200BDS
Rev. 4
02/2010

Information in this document is provided solely to enable system and software implementers to use Freescale Semiconductor products. There are no express or implied copyright licenses granted hereunder to design or fabricate any integrated circuits or integrated circuits based on the information in this document.

Freescale Semiconductor reserves the right to make changes without further notice to any products herein. Freescale Semiconductor makes no warranty, representation or guarantee regarding the suitability of its products for any particular purpose, nor does Freescale Semiconductor assume any liability arising out of the application or use of any product or circuit, and specifically disclaims any and all liability, including without limitation consequential or incidental damages. “Typical” parameters that may be provided in Freescale Semiconductor data sheets and/or specifications can and do vary in different applications and actual performance may vary over time. All operating parameters, including “Typicals”, must be validated for each customer application by customer’s technical experts. Freescale Semiconductor does not convey any license under its patent rights nor the rights of others. Freescale Semiconductor products are not designed, intended, or authorized for use as components in systems intended for surgical implant into the body, or other applications intended to support or sustain life, or for any other application in which the failure of the Freescale Semiconductor product could create a situation where personal injury or death may occur. Should Buyer purchase or use Freescale Semiconductor products for any such unintended or unauthorized application, Buyer shall indemnify and hold Freescale Semiconductor and its officers, employees, subsidiaries, affiliates, and distributors harmless against all claims, costs, damages, and expenses, and reasonable attorney fees arising out of, directly or indirectly, any claim of personal injury or death associated with such unintended or unauthorized use, even if such claim alleges that Freescale Semiconductor was negligent regarding the design or manufacture of the part.

RoHS-compliant and/or Pb-free versions of Freescale products have the functionality and electrical characteristics as their non-RoHS-compliant and/or non-Pb-free counterparts. For further information, see http://www.freescale.com or contact your Freescale sales representative.

For information on Freescale’s Environmental Products program, go to http://www.freescale.com/epp.

Freescale™ and the Freescale logo are trademarks of Freescale Semiconductor, Inc. All other product or service names are the property of their respective owners.
© Freescale Semiconductor, Inc. 2008, 2010. All rights reserved.

Downloaded from Arrow.com.