Panasonic

DATA SHEET

Part No.	MN63Y1214
Package Code No.	HSON008-A-0202

Established: May.2017

About this manual

■ Organization

These specifications provide important information for users of the MN63Y1214, including an overview and descriptions of functions.

■ Manual Configuration

Each section of this manual consists of a title, main text, and notes. The layout and definition of each section are shown below.

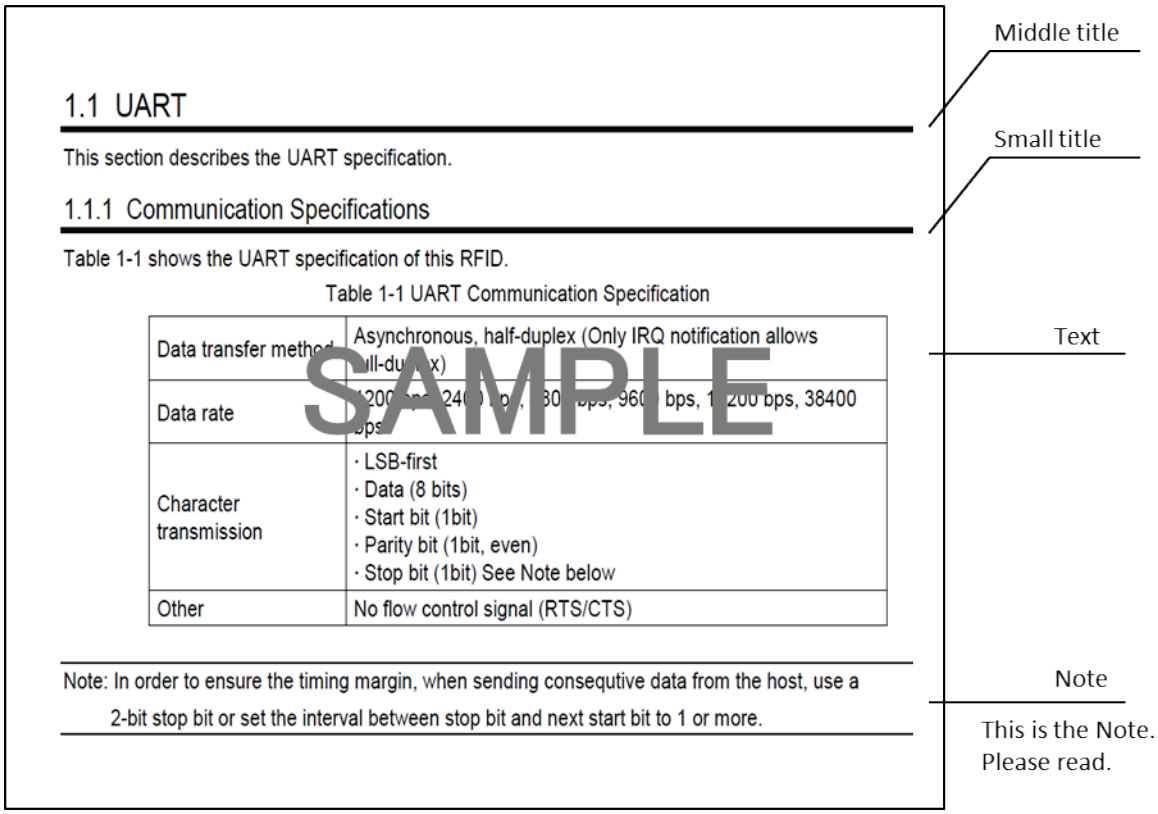

■ Finding Desired Information

This manual provides two methods for finding desired information quickly and easily.

1. Consult the table of contents at the front of the manual to locate desired titles.
2. Chapter names are located at the top outer corner of each page, and section titles are located at the bottom outer corner of each page.

Chapter 1 Overview

Chapter 2 Pin Descriptions

Chapter 3 Memory Map

Chapter 4 RF Communication Mode

Chapter 5 Serial Communication Mode

Chapter 6 Interrupt Generation Function

Chapter 7 Tunnel Mode

Chapter 8 Annex

Chapter 9 Electrical characteristics

Contents

Chapter 1 Overview 11

1.1 Features 12
1.2 Block Diagram 13
1.3 Operation Mode 14
1.4 Password Protected Communication Function 15

Chapter 2 Pin Descriptions 17

2.1 List of Pins 18
2.2 Pin Descriptions 20
2.3 Connection Example 21

Chapter 3 Memory Map 23

3.1 Block Configuration 24
3.2 Physical Memory Map 25
3.3 System Area 27
3.3.1 Parameter Specifications 27
3.3.2 Enabling System Area 35
3.4 Address Correspondence 36

Chapter 4 RF Communication Mode 37

4.1 RF Communication Mode Sequence 38
4.2 JISX6319-4 Specification 39
4.2.1 Communication Specifications 39
4.2.2 Frame Format 39
4.2.3 State Transition Diagram 40
4.2.4 Flow Chart 40
4.2.5 Various Settings 41
4.2.5.1 System Code 41
4.2.5.2 PICC (Proximity IC Card) Identifier 41
4.2.5.3 Response Time Descriptor 42
4.2.5.4 Anti-collision 43
4.2.5.5 Service 43
4.2.5.6 Block 43
4.2.5.7 Block List 44
4.2.5.8 Status Flag 46
4.2.6 Command 47
4.2.6.1 REQ 48
4.2.6.2 READ 49
4.2.6.3 WRITE 51
4.2.6.4 VERIFY 52

4.2.7 NDEF 54
4.2.7.1 MEMORY MAP 54
4.2.7.2 Setup of System Code (SC) 55
4.2.7.3 Setup of Attribute Information Block 55
4.2.7.4 NDEF FILE 56
4.3 ISO/IEC14443 TypeA Specification 57
4.3.1 Communication Specification 57
4.3.2 Frame Format 57
4.3.3 Protocol Control 59
4.3.4 Block Control 61
4.3.5 Upper Command Format 62
4.3.6 State Transition Diagram 63
4.3.7 Flow Chart 64
4.3.8 Various Settings 65
4.3.8.1 PUPI (Pseudo-Unique PICC Identifier) 65
4.3.8.2 FWI (Frame Waiting Time Integer) 65
4.3.8.3 WTXM (waiting time extension multiplier) 65
4.3.8.4 File System 66
4.3.8.5 Address 66
4.3.8.6 Data 67
4.3.8.7 Status Word 68
4.3.9 Command 69
4.3.9.1 REQA/WUPA (ISO/IEC14443-3 TypeA command) 70
4.3.9.2 ANTICOLLISION (ISO/IEC14443-3 TypeA command) 71
4.3.9.3 SELECT (ISO/IEC14443-3 TypeA command) 72
4.3.9.4 HLTA (ISO/IEC14443-3 TypeA command) 74
4.3.9.5 RATS (ISO/IEC14443-4 TypeA command) 75
4.3.9.6 SELECT (APDU command) 77
4.3.9.7 READ (APDU command) 79
4.3.9.8 WRITE (APDU command) 80
4.3.9.9 VERIFY (APDU command) 81
4.3.10 NDEF 82
4.3.10.1 Memory Map 82
4.3.10.2 NDEF Tag Application Selection 83
4.3.10.3 CC File 83
4.3.10.4 NDEF File 84
4.4 ISO/IEC14443 TypeB Specification 85
4.4.1 Communication Specification 85
4.4.2 Frame Format 85
4.4.3 Protocol Control 86
4.4.4 Block Control 86
4.4.5 Upper Command Format 86
4.4.6 State Transition Diagram 87
4.4.7 Flow Chart 88
4.4.8 Various Settings 89
4.4.8.1 AFI (Application Family Identifier) 89
4.4.8.2 PUPI (Pseudo-Unique PICC Identifier) 89
4.4.8.3 FWI (Frame Waiting Time Integer) 89

4.4.8.4 WTXM (waiting time extension multiplier) 90
4.4.8.5 File System 90
4.4.8.6 Address 90
4.4.8.7 Data 90
4.4.8.8 Status Word 90
4.4.9 Command 91
4.4.9.1 REQB/WUPB (ISO/IEC14443-3 TypeB command) 92
4.4.9.2 ATTRIB (ISO/IEC14443-3 TypeB command) 94
4.4.9.3 HLTB (ISO/IEC14443-3 TypeB command) 96
4.4.9.4 SELECT (APDU command) 97
4.4.9.5 READ (APDU command) 97
4.4.9.6 WRITE (APDU command) 97
4.4.9.7 VERIFY (APDU command) 97
4.4.10 NDEF 98

Chapter 5 Serial Communication Mode 99

5.1 Serial Communication Mode Sequence 100
5.2 I2C 101
5.2.1 Communication Specifications 101
5.2.2 Frame Format 101
5.2.3 Specifying Slave Address 102
5.2.4 Status 102
5.2.5 Command 104
5.2.5.1 READ 104
5.2.5.2 WRITE 105
5.2.5.3 RREG 106
5.2.5.4 WREG 107
5.2.5.5 STATUS 108
5.2.6 Time Chart 109
5.2.6.1 Time Chart of Normal Access 109
5.2.6.2 Time Chart of Divided Command Access 110
5.2.6.3 Time Chart of Divided Response Access 111
5.2.6.4 The time constraint by INTWT setting 112

Chapter 6 Interrupt Generation Function 113

6.1 Interrupt Source 114

Chapter 7 Tunnel Mode 117

7.1 Tunnel Mode Sequence 118
7.2 Communication between Reader/Writer and RFID 119
7.2.1 Using JISX6319-4 119
7.2.2 Using ISO/IEC14443 119
7.3 Communication between Host and RFID 120
7.3.1 Communication Specification 120
7.3.2 IRQ Notification 120
7.3.3 Response to QUERY Command 121
7.3.4 Timeout 122

7.3.4.1 Wait Time for QUERY Command 123
7.3.4.2 Wait Time for ANSWER Command 124
7.4 Command 125
7.4.1 Read in Tunnel Mode 126
7.4.1.1 Read Command in Tunnel Mode (Reader/Writer to RFID) 126
7.4.1.2 QUERY Command (Host to RFID) 127
7.4.1.3 QUERY Response (RFID to Host) 127
7.4.1.4 ANSWER Command (Host to RFID) 128
7.4.1.5 ANSWER Response (RFID to Host) 128
7.4.1.6 Read Response in Tunnel Mode (RFID to Reader/Writer) 128
7.4.2 Write in Tunnel Mode 130
7.4.2.1 Write Command in Tunnel Mode (Reader/Writer to RFID) 130
7.4.2.2 QUERY Command (Host to RFID) 131
7.4.2.3 QUERY Response (RFID to Host) 131
7.4.2.4 ANSWER Command (Host to RFID) 132
7.4.2.5 ANSWER Response (RFID to Host) 132
7.4.2.6 Write Response in Tunnel Mode (RFID to Reader/Writer) 132

Chapter 8 Annex 135

8.1 Exclusive Control 136
8.2 State Transition Diagram in Operation Mode 140
8.3 Flow Chart in Tunnel Mode 141
8.4 Restriction on I2C communication 142

Chapter 9 Electrical characteristics 143

Chapter 1 Overview

1

1.1 Features

MN63Y1214 is an LSI for RFID (Radio Frequency Identification), which features the following:

- Built-in 8-Kbit FeRAM non-volatile memory with fast write and low power consumption.
- RF interface compliant with JISX6319-4 (212 kbps / 424 kbps), ISO/IEC14443 TypeA(106 kbps), and ISO/IEC14443 TypeB (106 kbps / 212 kbps / 424kbps) of the 13.56-MHz contactless IC card standards.
- Serial interface compatible with I2C (400 kHz)
- Batteryless RF communication
- Three communication modes of RF, serial, and tunnel (Tunnel mode allows communications between reader/writer and host CPU via this LSI.)
- Access Restriction function of RF communication by password.
- Supply voltage range: 1.7 V to 3.6 V

1.2 Block Diagram

Figure 1-1 shows a block diagram.

This RFID provides RF interface for contactless communication with external reader/writer, serial interface for contact communication with external host, control logic for command processing and various controls, 2-Kbit transmit/receive buffer for RF communication, and 8-Kbit FeRAM non-volatile memory.

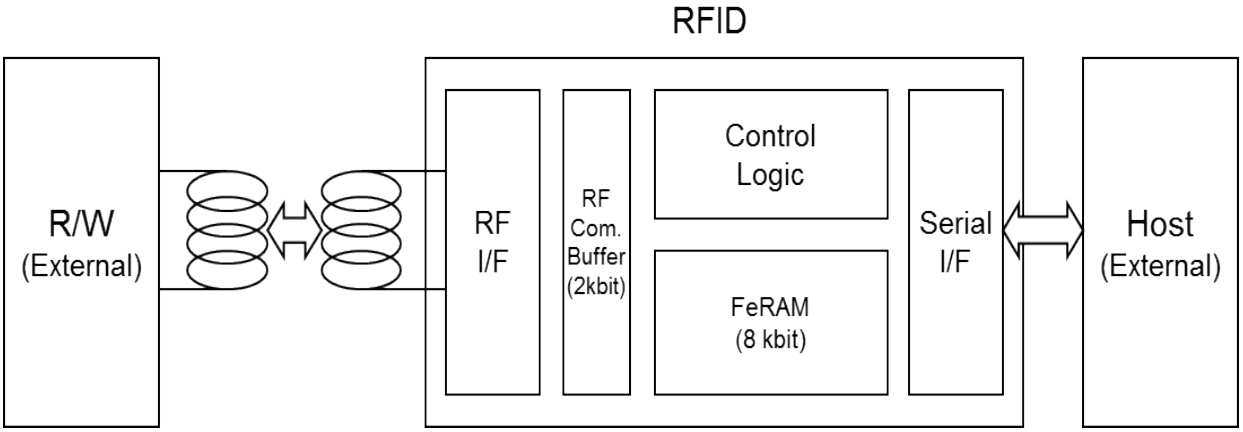

Figure 1-1 Block Diagram

1.3 Operation Mode

This RFID provides three operation modes of RF communication, serial communication, and tunnel.

Figure 1-2 gives the overview of each operation mode.

RF communication mode

This mode is used for communication between reader/writer and RFID. Reader/writer is the master and RFID is the slave. Key commands are read and write commands to FeRAM of RFID. This mode allows batteryless operations that use only the power supplied from the antenna of reader/writer.

For more information about RF communication mode, see Chapter 4 RF Communication Mode.

Serial communication mode

This mode is used for communication between host and RFID. Host is the master and RFID is the slave. Key commands are read and write commands to FeRAM of RFID. This mode requires a power supply to the supply voltage pin (VDDEX) of RFID.

For more information about serial communication mode, see Chapter 5 Serial Communication Mode.

Tunnel mode

This mode is used for communication between reader/writer and host via RFID. Reader/writer is the master and host is the slave. Key commands are read and write commands to host. This mode requires a power supply to the supply voltage pin (VDDEX) of RFID.

For more information about serial communication mode, see Chapter 7 Tunnel Mode.

Additionally, for state transition diagram in each operation mode, see Section 8.2 State Transition Diagram in Operation Mode.

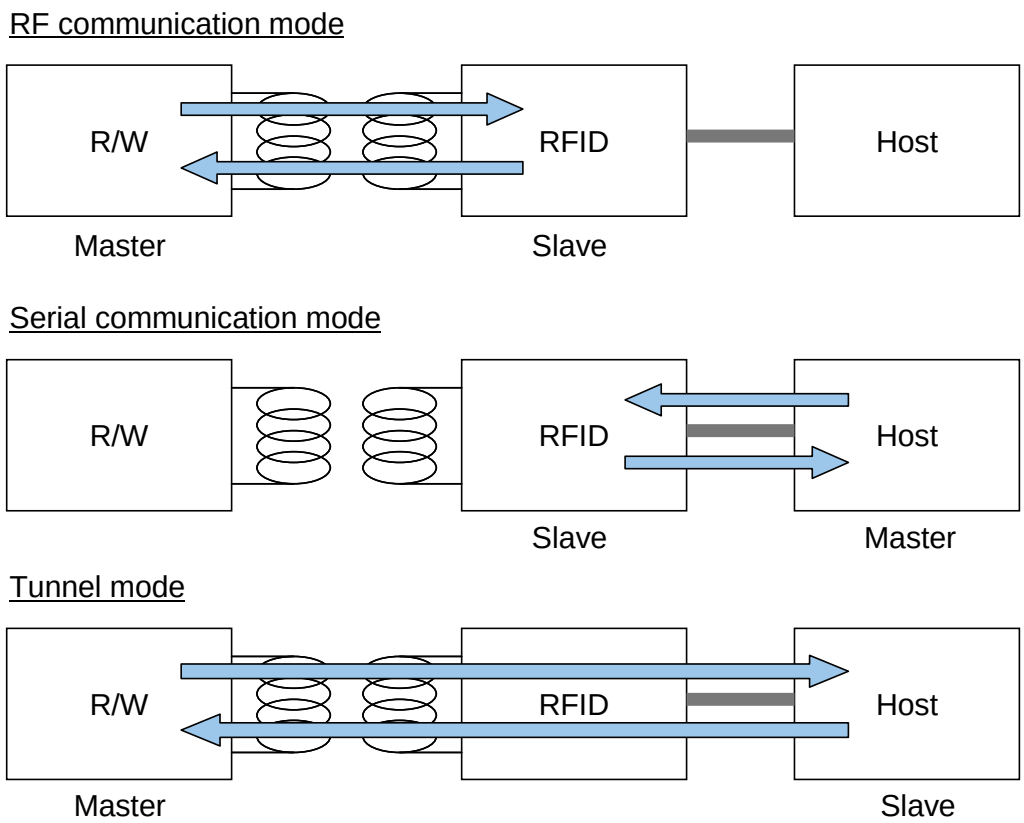

Figure 1-2 Operation Mode

1.4 Password Protected Communication Function

This RFID provides an access restriction function to prevent access from illegal readers/writers.

Figure 1-3 depicts its functionality in each operation mode.

With RF communication mode, it can restrict the access from readers/writers by password, and no access restriction communications are available

Serial communication mode and Tunnel mode allows only plaintext communication.

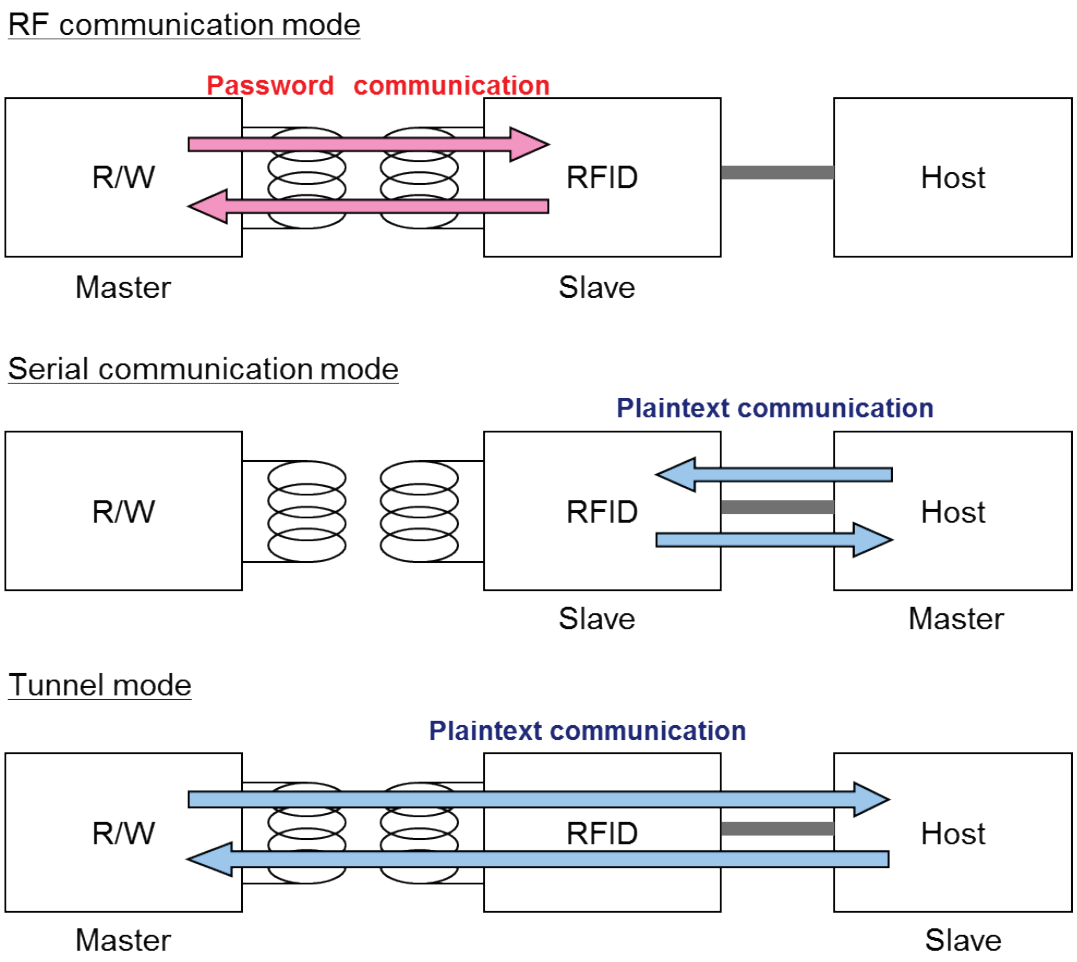

Figure 1-3 Password Protected Communication Function

Chapter 2 Pin Descriptions

2

2.1 List of Pins

Table 2-1 shows a list of pins of this RFID and Figure 2-1 illustrates the pin assignments of this RFID.
Figure 2-2 illustrates the outside drawing of package.
Caution: The dimensions of package may be changed, Please identify it on delivery specifications.

Table 2-1 List of Pins

Pin No.	Name	I/O	Output type	Description
1	VB	I/O	-	Connected to coil
2	VDDEX	-	Power	Contact power supply (Apply 1.7 V through 3.6 V.)
3	VSS	-	GND	Ground
4	VA	I/O	-	Connected to coil
5	NIRQ	Output	Open Drain	Interrupt request output
6	SCL	Input	-	Host interface (I2C: 400 kHz)
7	SDA	I/O	Open Drain	Host interface (I2C: 400 kHz)
8	VDDA	-	Power	Internal analog power supply (Connect a capacitor between this pin and VSS.)

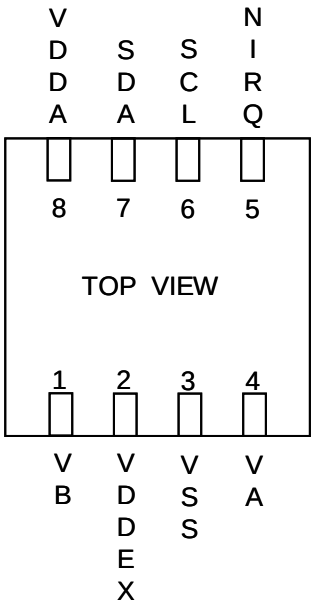

Figure 2-1 Pin Assignments (SON8)

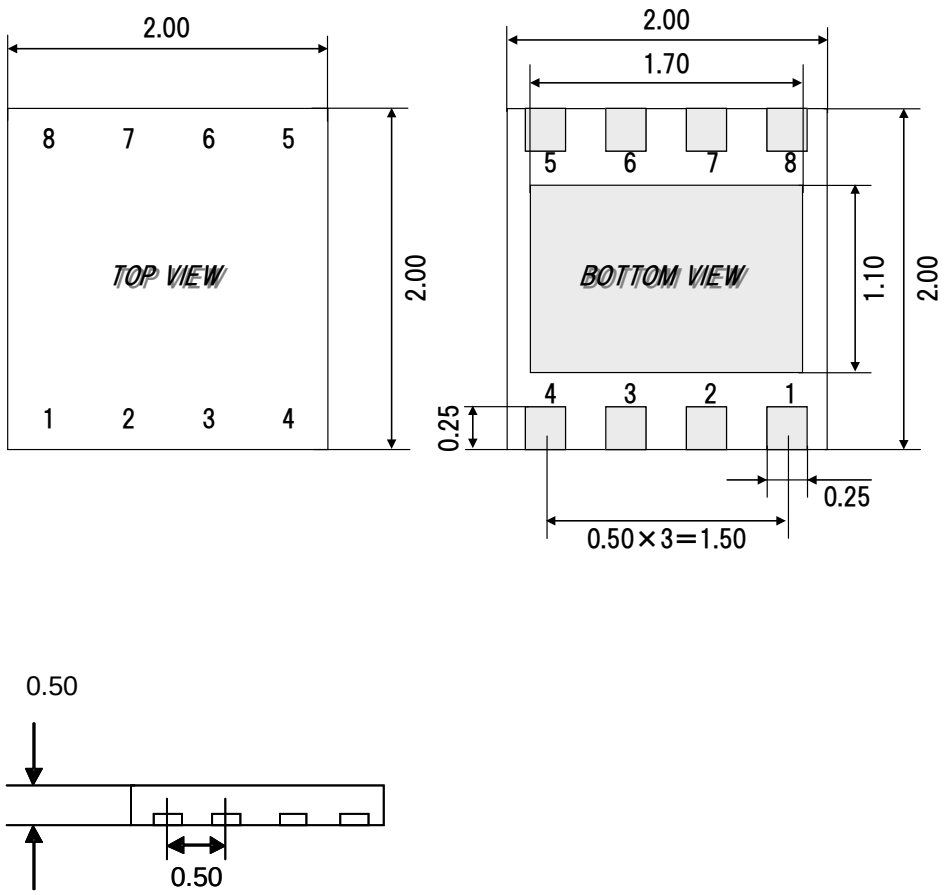

Unit: mm

Figure 2-2 Outside drawing (SON8)

2.2 Pin Descriptions

Coil connection pins (VA, VB)

Used for connecting an antenna coil. Also connect a resonance capacitor for adjusting resonance frequency.

Ground (VSS)

A reference power supply pin. Connect to the ground of the host CPU.

Internal analog power supply (VDDA)

An internal analog power supply pin. Connect a capacitor (see the Product Standards for its value) between VDDA and VSS pins as close as possible to the RFID. It should not be applied to the external power supply to this pin.

Contact power supply (VDDEX)

A contact power supply pin. Apply a "high" voltage to this pin when communicating data between the host CPU and RFID. Connect a capacitor (0.1μF) between VDDEX and VSS pins as close as possible to the RFID.

Host interface I2C (SDA, SCL)

I2C uses N-ch open drain pins, which need to be externally pulled up to VDDEX. However, the pins can be left open if I2C is not used. It is available between the frequencies 1 kHz and 400 kHz. Start the access Constant time(t_{Boot}) after applying VDDEX. For more information about t_{Boot}, see the Product Standards.

Interrupt request (NIRQ)

An N-ch open drain pin to request an interrupt to the host and should be pulled up externally.

2.3 Connection Example

Figure 2-3 gives a connection example.

This example shows that the host's GPIO controls the RFID's VDDEX. In this case, when not using serial communication, turning VDDEX off allows the consumption current of the RFID to be turned off. In addition, it is also possible to supply a voltage to VDDEX directly from the power supply, not from the host's GPIO.

The SDA (IO) and NIRQ pins are open-drain output. Pull up these pins to the same voltage level as the power supply of the host.

Please arrange the capacity between power supplies of VDDA near the PKG as much as possible.

In addition, the recommended value is different by the antenna size, refer to the product specifications for more information.

Unite the resonance capacity between VA-VB terminals with antenna specification, and choose the optimal capacity value.

In addition, in the figure 2-3 Connection Example, Leakage current flows by the pull-up of a NIRQ terminal.

It is not concerned with ON/OFF of VDDEX but the leakage current about below 0.1μA (actual measurement) flows into a NIRQ terminal.

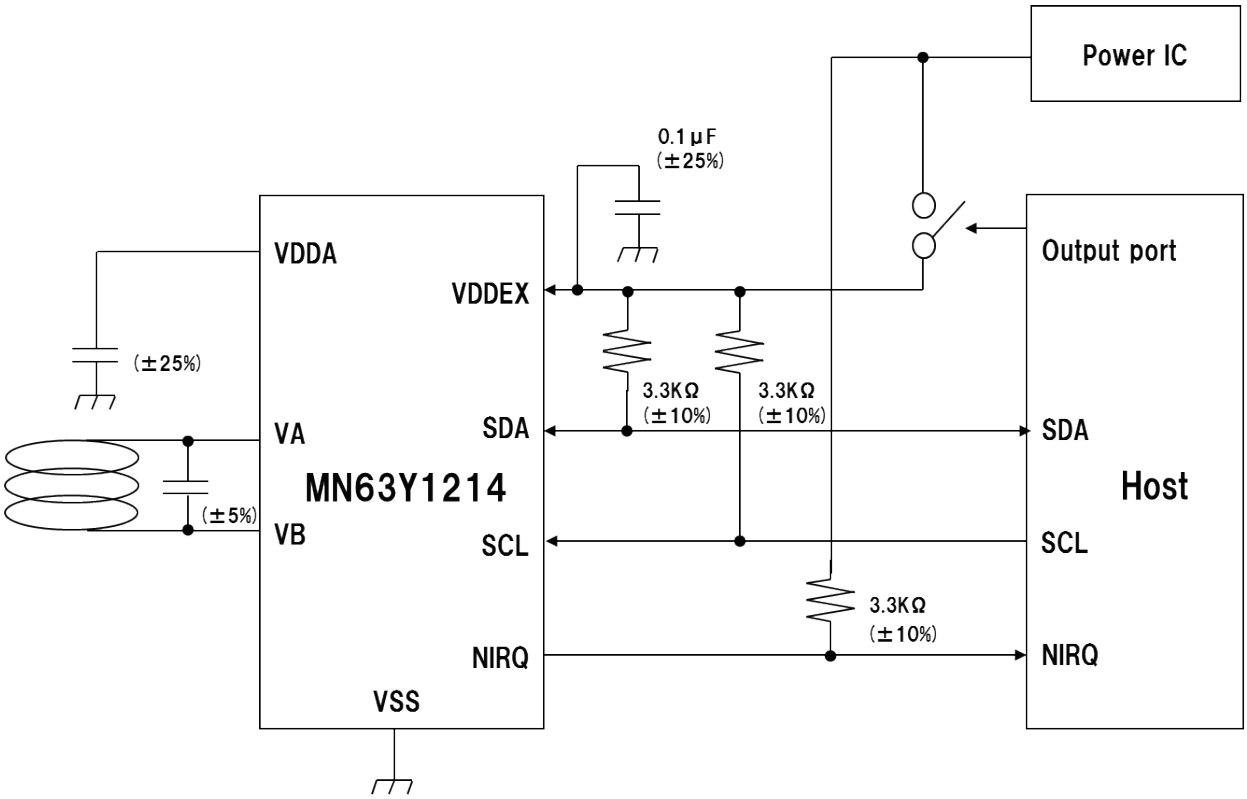

Figure 2-3 Connection Example

Chapter 3 Memory Map

3

3.1 Block Configuration

Figure 3-1 illustrates the block configuration of 8Kbit FeRAM.

This LSI consists of 64 FeRAM blocks. The size of a block is 16 bytes.

The memory consists of two areas: user and system areas.

The system area stores RF-communication-related parameters and memory-access-control-related data, etc.

Block	Area	Type
0	16-bytes FeRAM	User area
1	16-bytes FeRAM	
2	16-bytes FeRAM	
3	16-bytes FeRAM	
…	…	
56	16-bytes FeRAM	
57	16-bytes FeRAM	
58	16-bytes FeRAM	
59	16-bytes FeRAM	
60	16-bytes FeRAM	System area
61	16-bytes FeRAM	
62	16-bytes FeRAM	
63	16-bytes FeRAM	

Figure 3-1 8Kbit FeRAM Block Configuration

3.2 Physical Memory Map

Figure 3-2 presents the physical memory map.

Block	Address	0x0	0x1	0x2	0x3	0x4	0x5	0x6	0x7	0x8	0x9	0xA	0xB	0xC	0xD	0xE	0xF
0	0x0000	User Area															
1	0x0010	User Area															
2	0x0020	User Area															
3	0x0030	User Area															
4	0x0040	User Area															
5	0x0050	User Area															
6	0x0060	User Area															
7	0x0070	User Area															
8	0x0080	User Area															
9	0x0090	User Area															
10	0x00A0	User Area															
11	0x00B0	User Area															
12	0x00C0	User Area															
13	0x00D0	User Area															
14	0x00E0	User Area															
15	0x00F0	User Area															
16	0x0100	User Area															
17	0x0110	User Area															
18	0x0120	User Area															
19	0x0130	User Area															
20	0x0140	User Area															
21	0x0150	User Area															
22	0x0160	User Area															
23	0x0170	User Area															
24	0x0180	User Area															
25	0x0190	User Area															
26	0x01A0	User Area															
27	0x01B0	User Area															
28	0x01C0	User Area															
29	0x01D0	User Area															
30	0x01E0	User Area															
31	0x01F0	User Area															
32	0x0200	User Area															
33	0x0210	User Area															
34	0x0220	User Area															
35	0x0230	User Area															
36	0x0240	User Area															
37	0x0250	User Area															

38	0x0260	User Area								
39	0x0270	User Area								
40	0x0280	User Area								
41	0x0290	User Area								
42	0x02A0	User Area								
43	0x02B0	User Area								
44	0x02C0	User Area								
45	0x02D0	User Area								
46	0x02E0	User Area								
47	0x02F0	User Area								
48	0x0300	User Area								
49	0x0310	User Area								
50	0x0320	User Area								
51	0x0330	User Area								
52	0x0340	User Area								
53	0x0350	User Area								
54	0x0360	User Area								
55	0x0370	User Area								
56	0x0380	User Area								
57	0x0390	User Area								
58	0x03A0	User Area								
59	0x03B0	User Area								
60	0x03C0	CONFIG								
61	0x03D0	CONFIG		IRQBS	IRQBE	HWCF	CONFIG			
62	0x03E0	SC	IDM				PMM	AFI	HW3	HW1
63	0x03F0	RORF	ROSI			SECURITY		TNPRM	HW2	CONFIG

Figure 3-2 Physical Memory Map

3.3 System Area

This section describes the system area.

3.3.1 Parameter Specifications

Each parameter of the system area is shown below.

All addresses and block numbers used in this section correspond to the physical address in Figure 3-2.

■ RORF (4 bytes)

RORF, SECURITY, and ACC of HW1 are an area to specify whether read/write or read-only is to be used in accessing the block by memory access commands in RF communication mode. Table 3-1 and Table 3-2 describe ACC, RORF and SECURITY setting, and Table 3-3 describe setting bits and corresponding block numbers. By default, all values are 0. Set all reserved bits to 0.

Table 3-1 RORF and SECURITY Setting at ACC=”0”

Value		Meaning -	
SECURITY	RORF	Bef. Password Authentication	Aft. Password Authentication
0	0	READ/WRITE	READ/WRITE
0	1	READ ONLY	READ ONLY
1	0	Cannot Access	READ/WRITE
1	1	Cannot Access	READ ONLY

Table 3-2 RORF and SECURITY Setting at ACC=”1”

Value		Meaning -	
SECURITY	RORF	Bef. Password Authentication	Aft. Password Authentication
0	0	READ/WRITE	READ/WRITE
0	1	READ ONLY	READ ONLY
1	0	Cannot Access	READ/WRITE
1	1	READ ONLY	READ/WRITE

Table 3-3 RORF Setting Bits and Corresponding Block Numbers

Address	bit7	bit6	bit5	bit4	bit3	bit2	bit1	bit0
0x03F0	Block16-19	Block12-15	Block8-11	Block4-7	Block3	Block2	Block1	Block0
0x03F1	Block48	Block44-47	Block40-43	Block36-39	Block32-35	Block28-31	Block24-27	Block20-23
0x03F2	Block56	Block55	Block54	Block53	Block52	Block51	Block50	Block49
0x03F3	Reserved	Reserved	Reserved	Reserved	Reserved	Block59	Block58	Block57

Note: The default value of an ACC parameter is “0”.

■ SECURITY (4 bytes)

For detail of SECURITY, refer to Table 3-1 and Table 3-2.

Table 3-4 shows SECURITY setting bits and corresponding block numbers. By default, all values are 0. Set all reserved bits to 0.

Table 3-4 SECURITY Setting Bits and Corresponding Block Numbers

Address	bit7	bit6	bit5	bit4	bit3	bit2	bit1	bit0
0x03F8	Block16-19	Block12-15	Block8-11	Block4-7	Block3	Block2	Block1	Block0
0x03F9	Block48	Block44-47	Block40-43	Block36-39	Block32-35	Block28-31	Block24-27	Block20-23
0x03FA	Block56	Block55	Block54	Block53	Block52	Block51	Block50	Block49
0x03FB	Reserved	Reserved	Reserved	Reserved	Reserved	Block59	Block58	Block57

■ ROSI (4 bytes)

ROSI is an area to specify whether read/write or read-only is to be used in accessing the block by memory access commands in serial communication mode. Table 3-5 describes ROSI setting, and Table 3-6 shows ROSI setting bits and corresponding block numbers. By default, all values are 0. Set all reserved bits to 0.

Table 3-5 ROSI Setting

Value	Meaning
0	Read/Write
1	Read only

Table 3-6 ROSI Setting Bits and Corresponding Block Numbers

Address	bit7	bit6	bit5	bit4	bit3	bit2	bit1	bit0
0x03F4	Block16-19	Block12-15	Block8-11	Block4-7	Block3	Block2	Block1	Block0
0x03F5	Block48	Block44-47	Block40-43	Block36-39	Block32-35	Block28-31	Block24-27	Block20-23
0x03F6	Block56	Block55	Block54	Block53	Block52	Block51	Block50	Block49
0x03F7	Reserved	Reserved	Reserved	Reserved	Reserved	Block59	Block58	Block57

■ HW1 (2 bytes)

HW1 is an area to store various setting data related to the hardware of this RFID.

Table 3-7 describes the HW1 parameter.

For the setting of the ACC, see Table 3-1 and Table 3-2, for the setting of the SWTX, see

Table 3-8 and for the setting of the TYPBSPD, see Table 3-9.

For the setting of the IDMSEL, see Table 3-10, and for the setting of RFSPD, see Table 3-11, and for the setting of RFTYPE, see Table 3-12. For the setting of the I2C_SLV, see Table3-13. Set all reserved bits to 0.

Table 3-7 HW1 Parameters

Address	Bit 7	Bit 6	Bit 5	Bit 4	Bit 3	Bit 2	Bit 1	Bit 0
0x03EE	ACC	SWTX	TYPBSPD	IDMSEL	PFSPD	RFTYPE		
0x03EF	Reserved	I2C_SLV						

Table 3-8 S(WTX) setting

bit6	Meaning
0	S(WTX) Block invalid(default)
1	S(WTX) Block valid

Table 3-9 TYPBSPD setting

Bit5	Meaning
0	Do not set
1	Limited data rare to 106, 212, 424 kbps for ISO/IEC14443 TypeB communication.

Note: A TYPBSPD parameter is certainly setting it as “1”.
The setting of TYPBSPD is valid when RFSPD is set to “0”

Table 3-10 IDMSEL Setting for Selecting IDM Data

Bit 4	Meaning
0	Use the fixed values (All-0) as JISX6319-4 PICC identifier or ISO/IEC14443 TypeA/B PICC. Values written in the system area are not used. (default)
1	Use the values written in the system area as JISX6319-4 PICC identifier or ISO/IEC14443 TypeA/B PICC.

Table 3-11 RFSPD parameter

Bit3	Meaning
0	No limit data rate for ISO/IEC14443 TypeB, JISX6319-4
1	Limited data rare to 106kbps for ISO/IEC14443 TypeB, and 212 kbps for JISX6319-4 communication (default)

Note: A RFSPD parameter is certainly setting it as “0”.

Table 3-12 RFTYPE Setting for Selecting RF Communication Protocol

Bit 2	Bit1	Bit 0	Meaning
0	0	1	Use JISX6319-4 only. (ISO/IEC14443 TypeA/B interface disabled)
0	1	0	Use ISO/IEC14443 TypeB only. (JISX6319-4, ISO/IEC14443 TypeA interface disabled)
0	1	1	Use JISX6319-4 and ISO/IEC14443 TypeB. (Automatic protocol detection, ISO/IEC14443 TypeA interface disabled)
1	0	0	Use ISO/IEC14443 TypeA only. (JISX6319-4 and ISO/IEC14443 TypeB interface disabled)
1	1	0	Use ISO/IEC14443 TypeA/B. (Automatic protocol detection, JISX6319-4 interface disabled)
1	1	1	Use JISX6319-4 and ISO/IEC14443 TypeA/B. (Automatic protocol detection) (default)
Others			Do not set

Table 3-13 I2C_SLV Setting for Specifying I2C Slave Address

Address	Bit 6	Bit 5	Bit 4	Bit 3	Bit 2	Bit 1	Bit 0
Default value	1	0	1	0	1	0	0

■ TNPRM (1 byte)

TNPRM is an area to store various setting data related to timeout in TUNNEL Mode.

For more information about this parameter, see Section 7.3.4 Timeout.

Table 3-14 describes the TNPRM parameter.

Table 3-14 TNPRM Parameters

Address	Bit 7	Bit 6	Bit 5	Bit 4	Bit 3	Bit 2	Bit 1	Bit 0
0x03FC	QWT				AWT			

■ QWT

QWT specifies the maximum wait time until the RFID receives a QUERY command from the host after it sends an IRQ to the host during tunnel mode operation.

QWT is determined using the following formula.

$$\text{Maximum wait time for QUERY command} = T \times 2^{QWT}$$

T: Typ. 1024 μs (±33%)

QWT: 0 to 8 (default: 4; typ. approximately 16 ms)

When this field is set to a value other than 0 to 8, a default value will be applied.

■ AWT

AWT specifies the maximum wait time until the RFID receives an ANSWER command from the host after it sends a response to the QUERY command to the host during tunnel mode operation.

AWT is determined using the following formula.

Maximum wait time for ANSWER command = $T \times 2^{AWT}$

T: typ. 1024 μs (±33%)

AWT: 0 to 12 (default: 7; typ. approximately 131 ms)

When this field is set to a value other than 0 to 12, a default value will be applied.

Note: T includes an error of ±33%. Set the QWT and AWT values in consideration of the error.

■ HW2 (1 byte)

HW2 is an area to store various setting data related to the hardware of this RFID.

Table 3-15 describes the HW2 parameter. INTWT and RESWT are parameters related to timeout in I2C communication. For the setting of IRQSEL for IRQ notification, see Table 3-16.

Table 3-15 HW2 Parameters

Address	Bit 7	Bit 6	Bit 5	Bit 4	Bi t3	Bit 2	Bit 1	Bit 0
0x03FD	INTWT		RESWT		IRQSEL			

■ INTWT

INTWT specifies the maximum wait time between the SCL clock edges in I2C communication.

INTWT is determined using the following formula. See 5.2.6 Time Chart.

Maximum wait time between SCL clock edge = $T \times 2^{INTWT}$

T: Typ. 6.16ms (±33%)

INTWT: 0 to 3 (default:2; typ. approximately 25ms)

■ RESWT

RESWT specifies the maximum wait time from the start of response to the command (NIRQ = L) until slave transmission request input in I2C communication. And in addition, it is applied to the maximum wait time between each access in divided access.

RESWT is determined using the following formula. See 5.2.6 Time Chart.

Maximum wait time for starting response = $T \times 2^{RESWT}$

T: Typ. 24.6ms(±33%)

RESWT: 0 to 3: (default:2, typ. approximately 98 ms)

Note: T includes an error of ±33%. Set the INTWT and RESWT values in consideration of the error.

■ IRQSEL

IRQSEL is used for IRQ notification to add the condition of generating an interrupt to the NIRQ pin.

Setting IRQSEL allows an additional interrupt to be generated in addition to a normal host command processing complete interrupt and tunnel mode interrupt.

There are four user-selectable additional interrupt sources, reader/writer magnetic-field detection, RF transmission completion interrupt, RF writing interrupt, or RF reading interrupt.

In addition, RF reading interrupt can set a range of access target area by IRQBS and IRQBE.

RF writing interrupt generates an interrupt when writing is started to FeRAM.

RF reading interrupt generates an interrupt when the response transmission for FeRAM access is completed.

For more information about interrupt source, see Chapter 6 Interrupt Generation Function.

The IRQSEL settings are as follows.

Table 3-16 IRQSEL Setting

Bit	Meaning
Bit3	Generate an interrupt on RF writing. (*1)
Bit2	Generate an interrupt on RF reading (*2,*3)
Bit1	Generate an interrupt when RF transmission is completed.
Bit0	Generate an interrupt when a magnetic field is detected.

(*1) The interrupt NIRQ is generated when writing is started to FeRAM.

(*2) The interrupt NIRQ is generated at the time the FeRAM read response transmissions is completed

(*3) The target block of FeRAM read out can be set by IRQBS, IRQBE

For the set value of each bit of IRQSEL, interrupt generation is disabled when setting 0 (non-selective), and enabled when setting 1.

By default, the value of IRQSEL is 0.

■ SC (2 bytes)

SC is used as the JISX6319-4 system code (2 bytes). For more information about system code, see Section 4.2.5.1 System Code.

Table 3-17 SC Parameters

Address	0x03E0	0x03E1
JISX6319-4 system code (2 bytes)	D0	D1
Default	0xAA	0xFF

■ IDM (8 bytes)

IDM is used as JISX6319-4 PICC (Proximity IC Card) identifier (8 bytes). The PUPI (Pseudo-Unique PICC Identifier) (4 bytes) of ISO/IEC14443 TypeA/B is shared with the lower 4 bytes of the JISX6319-4 PICC identifier. For information about JISX6319-4 PICC identifier, see Section 4.2.5.2 PICC (Proximity IC Card) Identifier, and for information about ISO/IEC14443 TypeA/B PUPI, see Section 4.3.8.1 PUPI.

Table 3-18 IDM Parameters

Address	0x03E2	0x03E3	0x03E4	0x03E5	0x03E6	0x03E7	0x03E8	0x03E9
JISX6319-4 PICC identifier (8 bytes)	D0	D1	D2	D3	D4	D5	D6	D7
Default	0x02	0xFE	0x00	0x00	0x00	0x00	0x00	0x00
ISO/IEC14443TypeA/B PUPI (4 bytes)	Reserved				D0	D1	D2	D3
Default	-	-	-	-	0x00	0x00	0x00	0x00

Note: In order to validate the value written in the system area IDM, the HW parameter's IDMSEL must be set to 1. See Table 3-10.

■ PMM (2 bytes)

Of the JISX6319-4 response time descriptor (8 bytes), PMM is an area (2 bytes) to specify maximum wait time for the response to READ/WRITE commands. See Section 4.2.5.3 .

Table 3-19 PMM Parameters

Address	0x03EA	0x03EB
JISX6319-4 Response time descriptor (2 bytes)	D0	D1
Default	0xFF	0xFF

■ AFI (1 byte)

AFI is an area to specify AFI (Application Family Identifier) of ISO/IEC14443 TypeA/B. See Section 4.4.8.1 AFI.

Table 3-20 AFI Parameters

Address	0x03EC
ISO/IEC14443 TypeA/B AFI (1 byte)	D0
Default	0x00

■ HW3 (1 byte)

HW3 is an area to specify FWI (Frame Waiting time Integer) of ISO/IEC14443 TypeA/B and WTXM (waiting time extension multiplier).

See Section 4.3.8.2 FWI (Frame Waiting time Integer), and Section 4.3.8.3 WTXM (waiting time extension multiplier) for WTXM

Table 3-21 HW3 parameter

Address	bit7	bit6	bit5	bit4	bit3	bit2	bit1	bit0
0x03ED	FWI (Default = 0x8)				WTXM (Default : 0x4)			

■ IRQBS

IRQBS set the top block address of FeRAM to be interrupted, on RF reading interruption.
The value between 0x00 to 0x3F is available to be set
If other value than mentioned above is set, a default value (0x00) will be applied.

Table 3-22 IRQBS parameter

Address	0x03D5
IRQBS	D0
Default	0x00

■ IRQBE

IRQBS set the end block address of FeRAM to be interrupted, on RF reading interruption.
The value between 0x00 to 0x3F is available to be set
If other value than mentioned above is set, a default value (0x00) will be applied.
In addition, when the value to be set is IRQBE < IRQBS, the same value as IRQBS will be applied for IRQBE.

Table 3-23 IRQBE parameter

Address	0x03D6
IRQBE	D0
Default	0x3F

An interrupt on RF reading will be generated when any block of FeRAM set by IRQBS and IRQBE to be readout.

■ HWCF

It is a system reserved area. Set reserved bits to 0x02. (default value is 0x00)

Table 3-24 HWCF parameter

Address	bit7	bit6	bit5	bit4	bit3	bit2	bit1	bit0
0x03D7	Reserved							

■ CONFIG

See the Administrator's Manual.

3.3.2 Enabling System Area

In order to enable parameters in the system area, CFEN and BCC (see the Administrator's Manual) of the system area must be set to valid values. If CFEN and BCC are not set to valid values, default values defined by each parameter will be applied.

Table 3-25 lists the setting application timings after rewriting parameters in the system area while CFEN and BCC are enabled. New parameter setting is applied to RORF, ROSI, and SECURITY immediately after rewriting, and applied to other parameters after turning power supply ON from OFF, or applied to other parameters after the self-reset by the WREG command of the serial communication.

Table 3-25 Parameter Application Timing

	A timing at which new parameter setting is applied after rewriting parameters when CFEN and BCC is enabled.
RORF	Apply immediately after rewrites.
ROSI	Apply immediately after rewrites.
SECURITY	Apply immediately after rewrites.
IRQBS	After rewrites, Apply after turning power ON from OFF or self-reset.
IRQBE	After rewrites, Apply after turning power ON from OFF or self-reset.
HW1	After rewrites, Apply after turning power ON from OFF or self-reset.
TNPRM	After rewrites, Apply after turning power ON from OFF or self-reset.
HW2	After rewrites, Apply after turning power ON from OFF or self-reset.
SC	After rewrites, Apply after turning power ON from OFF or self-reset.
IDM	After rewrites, Apply after turning power ON from OFF or self-reset.
PMM	After rewrites, Apply after turning power ON from OFF or self-reset.
AFI	After rewrites, Apply after turning power ON from OFF or self-reset.
HW3	After rewrites, Apply after turning power ON from OFF or self-reset.
CONFIG	See the Administrator's Manual.

Note: Power OFF means power supplies from both VDDEX and RF interface are OFF.

3.4 Address Correspondence

Figure 3-3 presents the physical address and the corresponding address of each communication mode.

Physical address		Serial communication mode	RF communication mode		
			JISX6319-4		ISO/IEC14443
Block0	0x0000	0x0000	Block No. 0	D0	0x0000
	0x0001	0x0001		D1	0x0001
	0x0002	0x0002		D2	0x0002
	0x0003	0x0003		D3	0x0003
	0x0004	0x0004		D4	0x0004
	0x0005	0x0005		D5	0x0005
	0x0006	0x0006		D6	0x0006
	0x0007	0x0007		D7	0x0007
	0x0008	0x0008		D8	0x0008
	0x0009	0x0009		D9	0x0009
	0x000A	0x000A		Da	0x000A
	0x000B	0x000B		Db	0x000B
	0x000C	0x000C		Dc	0x000C
	0x000D	0x000D		Dd	0x000D
	0x000E	0x000E		De	0x000E
	0x000F	0x000F		Df	0x000F
Block1	0x0010	0x0010	Block No. 1	D0	0x0010
	0x0011	0x0011		D1	0x0011
	…	…		…	…
	0x001E	0x001E		De	0x001E
	0x001F	0x001F		Df	0x001F
…					
Block63	0x03F0	0x03F0	Block No. 63	D0	0x03F0
	0x03F1	0x03F1		D1	0x03F1
	…	…		…	…
	0x03FE	0x03FE		De	0x03FE
	0x03FF	0x03FF		Df	0x03FF

Figure 3-3 Address Correspondence

Chapter 4 RF Communication Mode

4

4.1 RF Communication Mode Sequence

Figure 4-1 illustrates the sequence in RF communication mode. Each sequence is described below.

SNo.1: A reader/writer sends an RF communication mode command to the RFID.

SNo.2: Once the RFID receives the RF communication mode command described in SNo.1, it processes the command and then sends the result to the reader/writer as the response to the command.

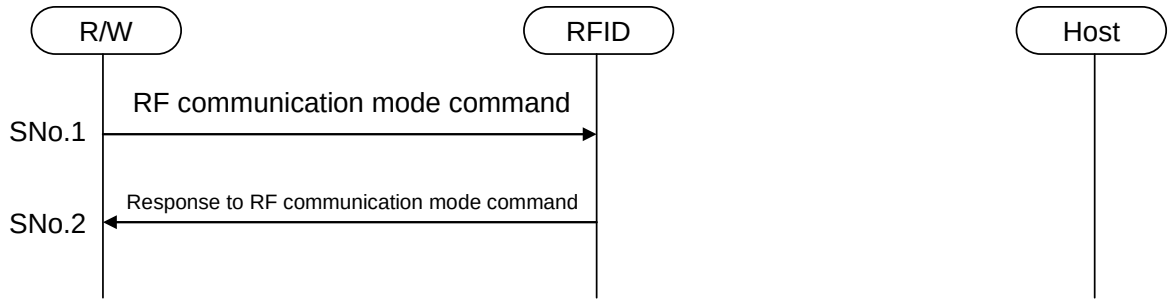

Figure 4-1 RF Communication Mode Sequence

4.2 JISX6319-4 Specification

This section describes the JISX6319-4 specification of this RFID.

4.2.1 Communication Specifications

Table 4-1 shows the JISX6319-4 specification of this RFID.

Table 4-1 JISX6319-4 Communication Specification

Carrier frequency		13.56 MHz
Modulation mode, Bit encoding	R/W→RFID	ASK10%, Manchester encoding
	RFID→R/W	Load modulation, Manchester encoding
Data rate		212 kbps / 424 kbps
Character transmission		・MSB-first ・Data (8 bits) ・No start bit ・No parity bit ・No stop bit ・No spare time between characters

4.2.2 Frame Format

Figure 4-2 illustrates the JISX6319-4 frame format and Table 4-2 defines the fields.

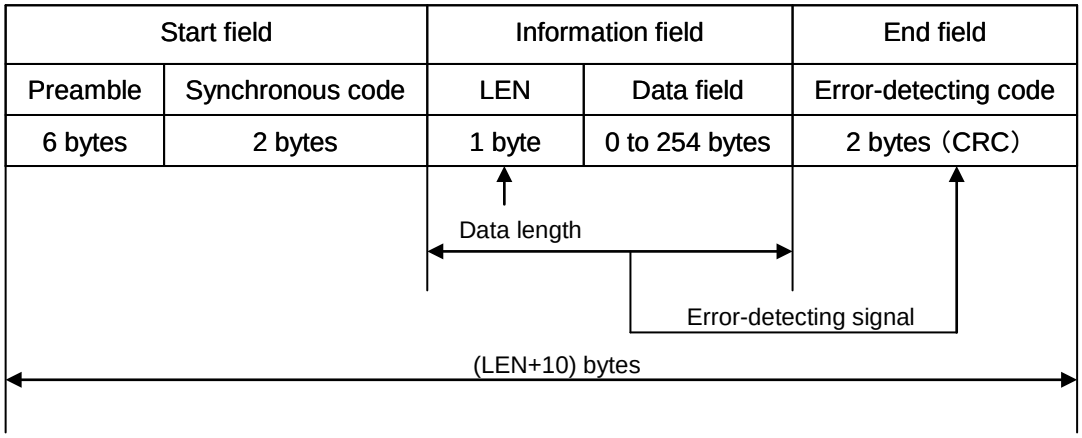

Figure 4-2 JISX6319-4 Frame Format

Table 4-2 JISX6319-4 Field Definition

Field name	Byte length	Definition
Preamble	6	0x000000000000
Synchronous code	2	0xB24D
LEN	1	n (data field length) + 1
Data field	n	Command message or Response message
Error-detecting code	2	Initial value: 0000, CRC (Generating polynomial: $X^{16}+X^{12}+X^{5}+1$)

4.2.3 State Transition Diagram

Figure 4-3 shows the state transition diagram for the JIX6319-4 PICC of this RFID.

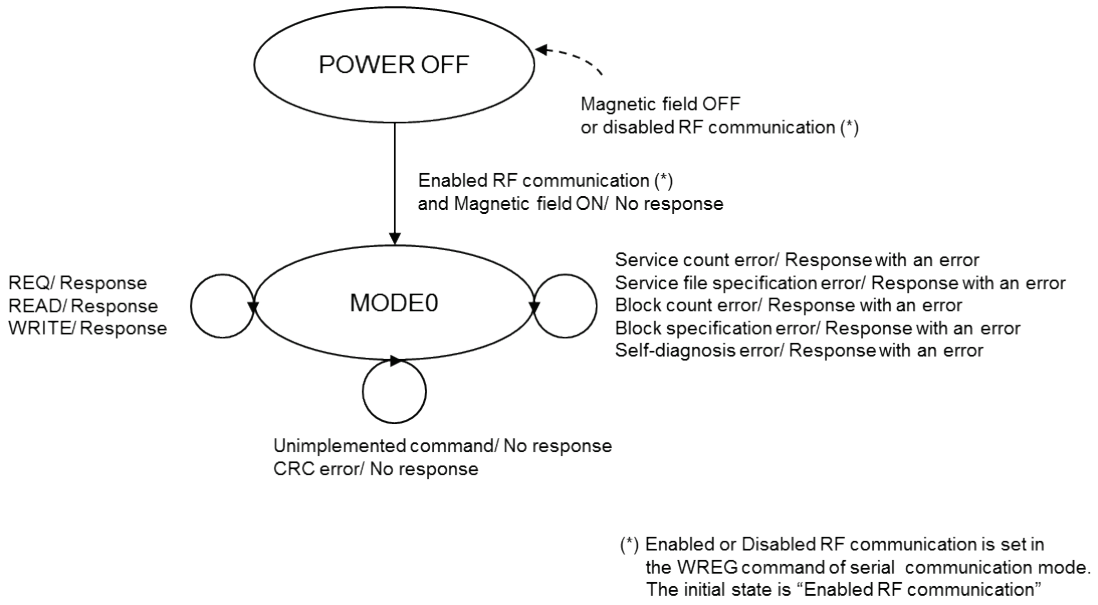

Figure 4-3 State Transition Diagram of JISX6319-4 PICC

4.2.4 Flow Chart

Figure 4-4 gives the flow chart for JIX6319-4 command processing of this RFID.

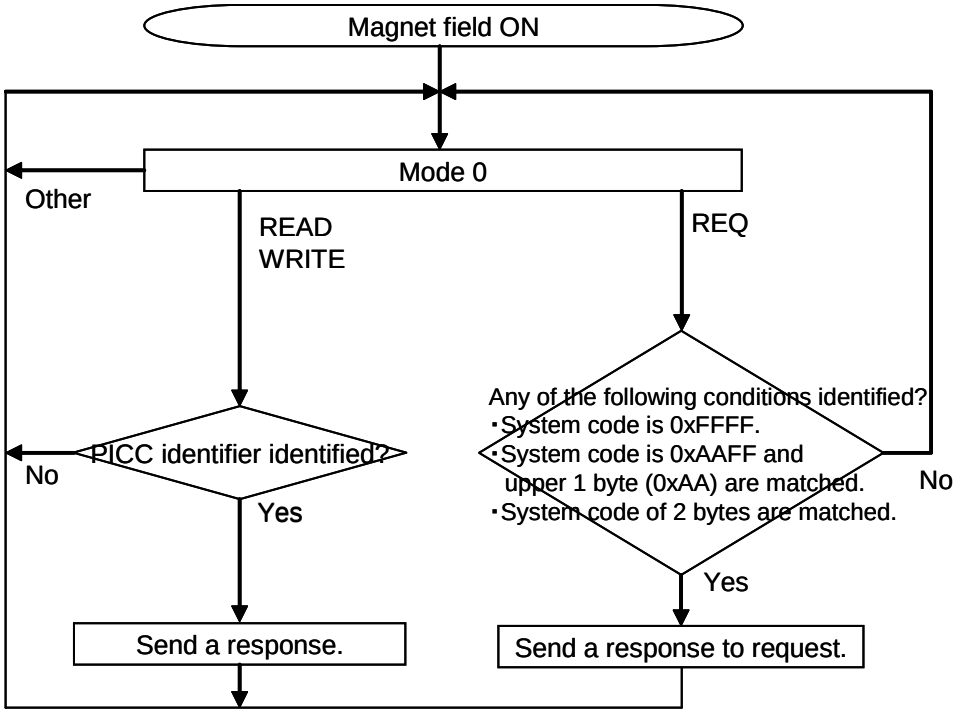

Figure 4-4 JISX6319-4 Flow Chart of Command Processing

4.2.5 Various Settings

This section describes the parameter settings and operation specifications based on JISX6319-4 for this RFID.

4.2.5.1 System Code

System code is a parameter specified by the REQ command that is used to identify the RFID. Figure 4-5 shows the system code. The value of the SC parameter of system area is applied for system code.

The response operation to the REQ command by system code is shown in Table 4-3.

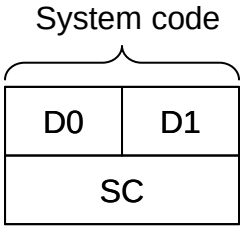

Figure 4-5 System Code

Table 4-3 Response to REQ Command by System Code

REQ command System code setting value	RFID's response to REQ command
0xFFFF	Responds regardless of the system area SC setting
0xAAFF	When the value of the upper 1 byte of the SC system area is 0xAA, the RFID responds regardless of the value of the lower 1 byte.
Other	Responds only when the setting value of the REQ command's system code matches the value specified in the system area SC (and does not respond in other cases).

4.2.5.2 PICC (Proximity IC Card) Identifier

The PICC (Proximity IC Card) identifier is a data used to identify RFID, and is included in the response to the REQ command. Figure 4-6 illustrates the PICC identifier's format. For The PICC identifier (8 bytes), the system area IDM is applied

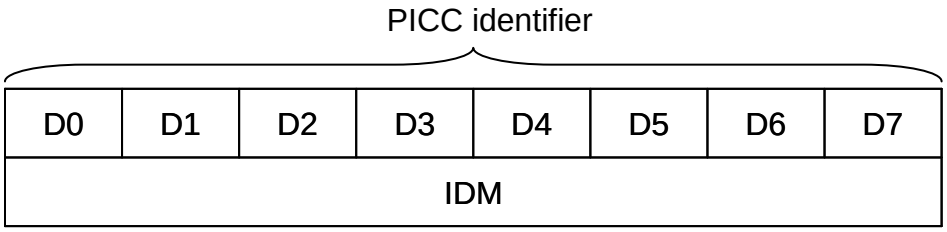

Figure 4-6 PICC Identifier Format

4.2.5.3 Response Time Descriptor

The response time descriptor is used to specify the maximum wait time until the RFID sends a response after reader/writer sends a command, and is included in the response to the REQ command. Figure 4-7 illustrates the response time descriptor's format. In hardware, D0, D1, and D7 bytes are set to FFh and D2 to D4 bytes are set to 00h.

The PMM parameter values of the system area are applied to the response time calculation parameters D5 and D6 bytes

Table 4-4 shows the response time calculation parameter and corresponding command.

Response time descriptor

D0	D1	D2	D3	D4	D5	D6	D7
0xFF	0xFF	0x00	0x00	0x00	PMM		0xFF

Response time calculation parameter

Figure 4-7 Response Time Descriptor Format

Table 4-4 Response Time Calculation Parameter and Corresponding Command

Response time calculation parameter	Command
D5	READ
D6	WRITE

Figure 4-8 shows the response time calculation parameter's format.

msb lsb

Bit 7	Bit 6	Bit 5	Bit 4	Bit 3	Bit 2	Bit 1	Bit 0
Exponent E		Real number B			Real number A		

Figure 4-8 Response Time Calculation Parameter Format

The response time is calculated by the following formula:

Response time = $T \times [(B + 1) \times n + (A + 1)] \times 4^E$

T: 256 × 16/fc (approx. 0.302 ms)

n: No. of blocks or No. of files of command parameter.

4.2.5.4 Anti-collision

JISX6319-4 uses the time slot method for anti-collision (prevention of collision). This RFID always responds according to the first slot.

4.2.5.5 Service

This RFID does not implement the concept of service based on JISX6319-4.

However, it is possible to specify multiple services using a command service list. Table 4-5 shows the available maximum number of services. When specifying multiple services in the service list, the values of service list must be set to the same value.

Table 4-5 Maximum Numbers of Services

Command	Maximum No. of services
READ	15
WRITE	11

Note: The RFID responds with an error when multiple services are not set to the same service file value.

4.2.5.6 Block

JISX6319-4 uses data of 16-byte blocks. Block number is used to specify each block. Figure 4-9 shows the block element of 2 bytes and Figure 4-10 shows the block element of 3 bytes. All of bits 6 to 4 of byte D0 for access mode setting should be set to 0 in this RFID; otherwise the RFID responds with an error.

	D0 (msb … lsb)								D1 (msb … lsb)							
	Bit 7	Bit 6	Bit 5	Bit 4	Bit 3	Bit 2	Bit 1	Bit 0	Bit 7	Bit 6	Bit 5	Bit 4	Bit 3	Bit 2	Bit 1	Bit 0
Definition	-	Access mode			Order of service code				Block number							
This RFID's setting value	1	0	0	0	Don't care				Block number designation							

Figure 4-9 Block Element of 2 Bytes

	D0 (msb … lsb)								D1 (msb … lsb)								D2 (msb … lsb)							
	Bit 7	Bit 6	Bit 5	Bit 4	Bit 3	Bit 2	Bit 1	Bit 0	Bit 7	Bit 6	Bit 5	Bit 4	Bit 3	Bit 2	Bit 1	Bit 0	Bit 7	Bit 6	Bit 5	Bit 4	Bit 3	Bit 2	Bit 1	Bit 0
Definition	-	Access mode			Order of service code				Block number															
This RFID's setting value	0	0	0	0	Don't care				Block number designation								0	0	0	0	0	Mode setting		

Figure 4-10 Block Elements of 3 Bytes

This RFID uses a block number to specify tunnel mode and VERIFY mode (only on the write command). Table 4-6 shows the mode settings. Bits 2 to 0 of byte D2 in 3-byte block element format are used. All of bits 7 to 3 of byte D2 should be set to 0; otherwise the RFID responds with an error.

Table 4-6 Mode Settings

Block element format	Byte D2 of block No.			Meaning
	Bit 2	Bit 1	Bit 0	Communication mode
2 bytes	-	-	-	RF communication mode
3 bytes	0	0	0	
	0	0	1	VERIFY mode (on the write command)
	1	0	0	TUNNNEL mode
	Others			prohibited

Table 4-7 shows the available maximum number of blocks. For READ command, the number is 15. The maximum number of blocks for WRITE command depends on the number of services.

Table 4-7 Maximum Numbers of Blocks

Command	Communication mode	No. of services	Maximum No. of blocks
READ	RF communication mode, Tunnel mode	1 to 15	15
WRITE	RF communication mode, Tunnel mode	1 to 8	12
		9 to 11	11
	VERIFY mode	1 to 11	1

4.2.5.7 Block List

For tunnel mode, how to specify block list is slightly different from the JISX6319-4 specification. Figure 4-11 shows the block list referenced from this RFID.

(1) Plaintext communication in RF communication mode: The block number of block list can be set freely. The RFID references to all block numbers.

(2) Plaintext communication in tunnel mode: The block number of block list should be set in ascending order. The RFID checks that the block number is set in ascending order and if not, it responds with an error.

Note: When specifying multiple blocks, communication mode (RF communication mode/ tunnel mode) for all blocks should be configured to the same setting; if not, the RFID responds with an error.

Note: When setting block numbers in ascending order, set to 0x00 following the block number 0xFF (and set to 0x01 following 0x00). Mode setting (bits 2 to 0 of byte D2) for all blocks should be set to the same value.

(1) Plaintext Communication in RF Communication mode

No. of blocks	Block list						
m	Block element 1 (Block No. a)	Block element 2 (Block No. b)	Block element 3 (Block No. c)	...	Block element (m -2) (Block No. d)	Block element (m -1) (Block No. e)	Block element m (Block No. f)

Block number can be set freely.

(2) Plaintext Communication in tunnel mode

No. of blocks	Block list						
m	Block element 1 (Block No. a)	Block element 2 (Block No. a+1)	Block element 3 (Block No. a+2)	...	Block element (m -2) (Block No. a+m -3)	Block element (m -1) (Block No. a+m -2)	Block element m (Block No. a+m -1)

Set the first block. Set the block numbers in ascending order from the first block.

Figure 4-11 Block List Referenced from this RFID

4.2.5.8 Status Flag

Table 4-8 lists the meanings of status flags.

Table 4-8 Status Flag

Status flag 1	Status flag 2	Meaning	Description
0x00	0x00	Normal end	Terminated normally.
0xFF	0x50	Tunnel mode error	No response from the host
0xFF	0x51	Tunnel mode error	The host responded with an error.
0xFF	0xA1	Service count specification error	The number of service files was out of the specification.
0xFF	0xA2	Block count specification error (*)	The number of blocks was out of the specification.
0xFF	0xA3	Service count specification error	Some settings for multiple services were different from the specification.
0xFF	0xA5	Block specification error	・Illegal access mode setting (except All-0) ・Illegal mode setting (RFU setting) ・Block number was specified outside FeRAM. ・Ascending order was not used to specify block numbers in tunnel mode.
0xFF	0x60	Self-diagnosis error (*)	・Write access to FeRAM-Read-Only area (RORF setting) ・Access to password protected area without password authentication (SECURITY setting)

(*) For more information about these errors, see the Administrator's Manual.

4.2.6 Command

Table 4-9 lists the JISX6319-4 commands supported by this RFID.
Subsequent sections describe each command in detail.

Table 4-9 JISX6319-4 Command List

Name	Code	Description
REQ	0x00	Reader/writer identifies RFID with this command.
READ	0x06	Reads data of RFID from reader/writer or, in tunnel mode, reads data of the host from reader/writer.
WRITE	0x08	Writes data to RFID from reader/writer or, in tunnel mode, writes data to the host from reader/writer.
VERIFY	0x08	Perform the password authentication. This command is applied when the VERIFY mode is specified by WRITE command

4.2.6.1 REQ

■ Purpose

Reader/writer identifies RFID with this command.

■ Command message

● Format

Command code	System code	Request code	Timeslot
1 byte	2 bytes	1 byte	1 byte

● Data field

Field	Setting	Remarks
Command code	0x00	
System code	・ 0xFFFF: Identifies all RFIDs. ・ 0xAAFF: Identifies RFID compliant with JIXS6319-4, regardless of category. ・ Other: The RFID corresponding to the specified system code responds.	
Request code	・ 0x00: No request ・ 0x01: Additional system code request ・ 0x02: Additional transmission protocol capability request	When values other than the values on the left column are set, the RFID treats this field as 0x00 (no request)
Timeslot	0x00: One slot	This RFID always treats this field as 0x00.

■ Response message

● Format

Response code	PICC identifier	Response time descriptor	Request data
1 byte	8 bytes	8 bytes	0 or 2 bytes

● Data field

Field	Output value	Remarks
Response code	0x01	
PICC identifier	See 4.2.5.2 PICC (Proximity IC Card) Identifier.	
Response time descriptor	See 4.2.5.3 Response Time Descriptor	
Request data	・ Request code 0x00: Request data 0 bytes (No additional data) ・ Request code 0x01: Adds system code. ・ Request code 0x02: 0x0083 (212 kbps, 424 kbps, automatic data rate detection supported) *1	*1) Response for that RFSPD parameter setting is 0 When the RFSPD setting is 1, “0x0001” will be applied (212kbps supported, automatic data rate detection Non-supported)

4.2.6.2 READ

■ Purpose

Reads data of RFID from reader/writer or, in tunnel mode, reads data of the host from reader/writer.

■ Command message

● Format

Command code	PICC identifier	No. of service file identifiers (k)	List of service file identifiers	No. of blocks (m)	Block list
1 byte	8 bytes	1 byte	2×k bytes	1 byte	2×m or 3×m bytes

● Data field

Field	Setting	Remarks
Command code	0x06	
PICC identifier	PICC identifier acquired by REQ command described in Section 4.2.6.1 REQ.	
No. of service file identifiers (k)	Number of service files Setting range: 0x01(1) to 0x0F(15)	When the range other than the range on the left column is set, the RFID responds with an error.
List of service file identifiers	Don't care (Setting example: 0x0900)	When specifying multiple services, the RFID responds with an error if all service files are not set to the same value.
No. of blocks (m)	Number of blocks specified in block list Setting range: ・ Plaintext communication in RF communication mode: 0x01(1) to 0x0F(15) ・ Other: 0x01(1) to 0x0F(15)	When the range other than the range on the left column is set, the RFID responds with an error.
Block list	Block list of data to be read For information about how to set, see the following: ・ 4.2.5.6 Block ・ 4.2.5.7 Block List	

■ Response message

● Format

Response code	PICC identifier	Status flag 1	Status flag 2	No. of blocks (m)	Block data
1 byte	8 bytes	1 byte	1 byte	1 byte	16×m byte

● Data field

Field	Output value	Remarks
Response code	0x07	
PICC identifier	See 4.2.5.2 PICC (Proximity IC Card) Identifier.	
Status flag 1	See 4.2.5.8 Status Flag	
Status flag 2	See 4.2.5.8 Status Flag.	
No. of blocks (m)	Number of blocks specified by the command	Omitted when the status is not "Normal end"
Block data	See 4.2.5.7 Block List.	Omitted when the status is not "Normal end"

4.2.6.3 WRITE

■ Purpose

Writes data to RFID from reader/writer or, in tunnel mode, writes data to the host from reader/writer.

■ Command message

● Format

command code	PICC identifier	No. of service file identifiers (k)	List of service file identifiers	No. of blocks (m)	Block list	Block data
1 byte	8 bytes	1 byte	2×k bytes	1 byte	2×m or 3×m bytes	16×m bytes

● Data field

Field	Setting	Remarks
Command code	0x08	
PICC identifier	PICC identifier acquired by REQ command described in Section 4.2.6.1	
No. of service file identifiers (k)	Number of service files Setting range: 0x01(1) to 0x0B(11)	When the range other than the range on the left column is set, the RFID responds with an error.
List of service file identifiers	Don't care (Setting example: 0x0900)	When specifying multiple services, the RFID responds with an error if all service files are not set to the same value.
No. of blocks (m)	Number of blocks specified in block list Setting range: ・ No. of service files is 1 to 8: 0x01(1) to 0x0C(12) ・ No. of service files is 9 to 11: 0x01(1) to 0x0B(11)	When the range other than the range on the left column is set, the RFID responds with an error.
Block list	Block list of data to be written For information about how to set, see the following: ・ 4.2.5.6 Block ・ 4.2.5.7 Block list	Set the RF communication mode or tunnel mode
Block data	See 4.2.5.7 Block list	

Note) The VERIFY command limits the number of blocks of the WRITE command, a block list, and block data settings. See 4.2.6.4 VERIFY for detail.

■ Response message

● Format

Response code	PICC identifier	Status flag 1	Status flag 2
1 byte	8 bytes	1 byte	1 byte

- Data field

Field	Output value	Remarks
Response code	0x09	
PICC identifier	See 4.2.5.2 PICC (Proximity IC Card) Identifier.	
Status flag 1	See 4.2.5.8 Status Flag.	
Status flag 2	See 4.2.5.8 Status Flag.	

4.2.6.4 VERIFY

■ Purpose

Perform the password authentication.

■ Command message

- Format

Command code	PICC identifier	No. of service file identifiers (k)	List of service file identifiers	No. of blocks (m)	Block list	Block data
1 byte	8 bytes	1 byte	2×k bytes	1 byte	2×m or 3×m bytes	16×m bytes

- Data field

Field	Setting	Remarks
Command code	0x08	
PICC identifier	PICC identifier acquired by REQ command described in Section 4.2.6.1	
No. of service file identifiers (k)	Number of service files Setting range: 0x01(1) to 0x0B(11)	When the range other than the range on the left column is set, the RFID responds with an error.
List of service file identifiers	Don't care (Setting example: 0x0900)	When specifying multiple services, the RFID responds with an error if all service files are not set to the same value
No. of blocks (m)	0x01	When the range other than the range on the left column is set, the RFID responds with an error.
Block list	0x000001	Set the VERIFY mode
Block data	16 bytes	

Note) The VERIFY command control the number of blocks of the WRITE command, a block list, and block data settings as shown above.

■ Response message

● Format

Response code	PICC identifier	Status flag 1	Status flag 2
1 byte	8 bytes	1 byte	1 byte

● Data field

Field	Output value	Remarks
Response code	0x09	
PICC identifier	See 4.2.5.2 PICC (Proximity IC Card) Identifier.	
Status flag 1	See 4.2.5.8 Status Flag.	
Status flag 2	See 4.2.5.8 Status Flag.	

4.2.7 NDEF

This RFID is based on Type3 Tag and Type4 Tag of NFC Forum and supports data exchange of a NDEF format.

This section explains Type3 Tag.

In addition, 4.3.10 NDEF explains Type4 Tag of NFC Forum.

Data exchange of NDEF can be performed by performing a predetermined setup to the user area of FeRAM.

Please refer to the applicable written standards of NFC Forum for the details of NDEF.

4.2.7.1 MEMORY MAP

The memory map at the time of NDEF use is shown in Fig. 4-12

Attribute Information Block is arranged to Block0.

NDEF file is arranged from Block1 to Block59.

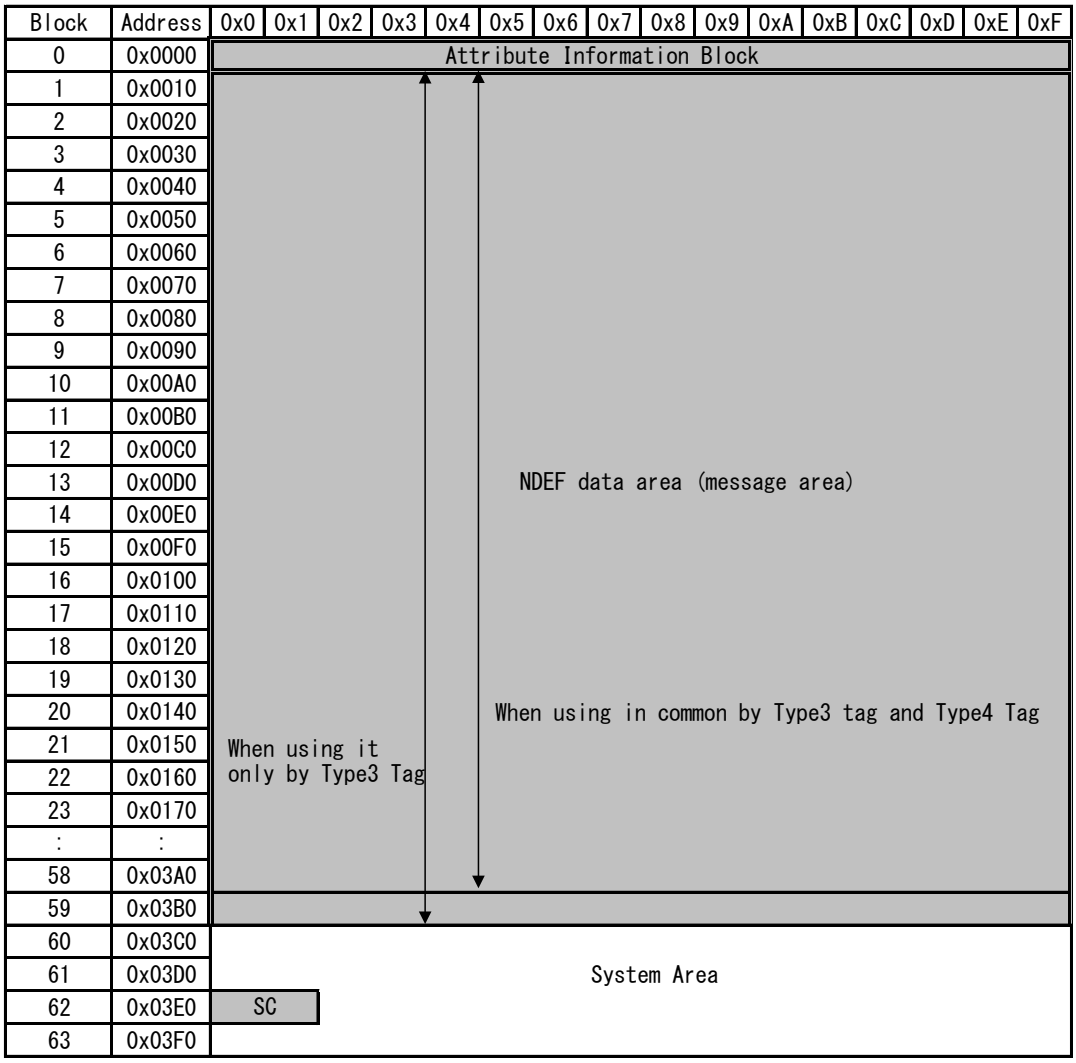

Figure 4-12 The memory map at the time of NDEF use. (NFC Forum Type3 Tag)

4.2.7.2 Setup of System Code (SC)

In order to use NDEF of Type3 Tag, It is necessary to set value "0x12FC." on a system code(SC).

4.2.7.3 Setup of Attribute Information Block

Attribute Information Block(AIB) is arranged to Block0.

Explanation and the example of a setting of AIB are shown in Table 4-10.

Table 4-10 The example of a setting of Attribute Information Block (AIB)

Physical address	Size	Value	Contents	Supplement
0x0000	1Byte	0x10	Mapping Version	Please set up according to the NDEF standard version to apply.
0x0001	1Byte	0x0F	Nbr (The number of the maximum block of one read command)	Please set up 0x0F in this RFID.
0x0002	1Byte	0x0B	Nbw (The number of the maximum block of one write command)	Please set up 0x0B in this RFID.
0x0003 ～0x0004	2Byte	0x0018	Nmaxb (T The number of maximum block of NDEF data which can handle this RFID)	
0x0005 ～0x0008	4Byte	0x00000000	Intact area	Please set 4 bytes of 0x00 to all.
0x0009	1Byte	0x00	WriteF 0x00: Write-in completion 0x0F: Under a write-in advance	Please set “0x0F” before the writing of a NDEF message, and Please set “0x00” after all the writing of a NDEF message completed.
0x000A	1Byte	0x01	RW-Flag 0x00: AIB is read-only. 0x01: Read and write are possible for AIB.	
0x000B ～0x000D	3Byte	0x000003	Ln (NDEF message length)	0x000003 = 3Byte (The value to a setting example of a setting of Table 4-11)
0x000E ～0x000F	2Byte	0x0046	Checksum	The sum of data level to address 0x0000 - 0x000D

4.2.7.4 NDEF FILE

An empty NDEF file is shown in Table 4-11 as an example of a setting of a NDEF file.

Table 4-11 The example of a setting of a NDEF file (An empty NDEF file)

Physical address	Size	Value	Contents	Supplement
0x0010 ～0x0012	3Byte	0xD00000	NDEF Message	A mentioned value is a value which shows an empty message.

4.3 ISO/IEC14443 TypeA Specification

This section describes the ISO/IEC14443 TypeA specification.

4.3.1 Communication Specification

Table 4-12 ISO/IEC14443 TypeA Communication Specification

Carrier frequency		13.56 MHz
Modulation mode, Bit coding	R/W→RFID	ASK100%, modified Miller
	RFID→R/W	106 kbps: OOK modulation, Manchester encoding (848 kHz subcarrier)
Data rate		106 kbps
Character transmission		(1) Short Frame ・LSB First ・Data (7 bits) (2) Standard Frame ・LSB First ・Data (8 bits) ・Odd parity bit (1 bit)

4.3.2 Frame Format

Figure 4-13 and figure 4-14 illustrates the ISO/IEC14443 TypeA frame format. Two kinds of format of a short frame and standard frame are supported. S(Start of Communication) is added in front of a data field, and E (End of Communication) is added to end of a data field.

On the standard frame format, P(Odd parity bit) is added between the bytes

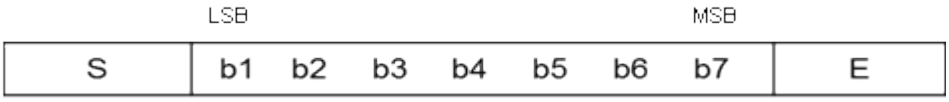

Figure 4-13 ISO/IEC14443 TypeA Short Frame Format

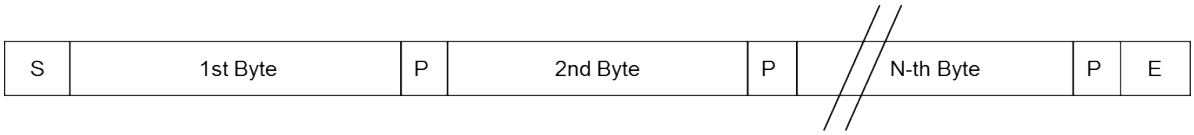

Figure 4-14 ISO/IEC14443 TypeA Standard Frame Format

In Figure 4-15, the ISO/IEC14443-4 block format is shown in as Figure 4-14 Standard Frame Format.

This RFID does not support CID and NAD of the first field, so adding them is prohibited.

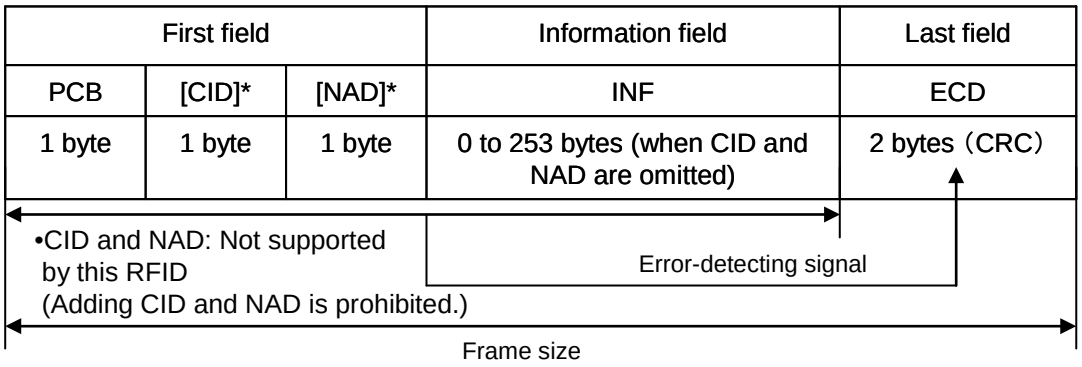

Figure 4-15 ISO/IEC14443-4 Block Format

4.3.3 Protocol Control

PCB (Protocol Control Byte) shown in Figure 4-15 and Table 4-13 is provided for ISO/IEC14443-4 protocol control, and used to send information necessary for data transmission control. This protocol has 3 block types. Table 4-13 lists the definition of block type. This RFID's protocol control specification is given in Table 4-14

Figure 4-16, Figure 4-17, and Figure 4-18 illustrate I-block, R-block, and S-block coding, respectively.

Table 4-13 Block Type

Block name	Definition
I-block	Used to send the information of application layer.
R-block	Used to send ACK (Acknowledge) or NAK (NegativeAcknowlege). R-block does not include INF field. An R-block corresponding to the last reception block will be sent.
S-block	Used to send control information. The following 2 types are provided: 1. Wait time extension request (WTX) 2. DESELECT command

Table 4-14 Protocol Control Specification

Item	Description	By this RFID
CID (Card Identifier)	First field parameter of ISO/IEC14443-4 frame (optional). Used to identify RFID.	Not supported
NAD (Node Address)	First field parameter of ISO/IEC14443-4 frame (optional). Used to establish a logical channel.	Not supported
Chaining	Used to transmit/receive divided data	Supported
ACK/NCK response	Used to send ACK (Acknowledge) or NAK (NegativeAcknowlege).	Supported
WTX	Used to extend the wait time for response from RFID	Supported
DESELECT command	Used to deselect the RFID.	Supported

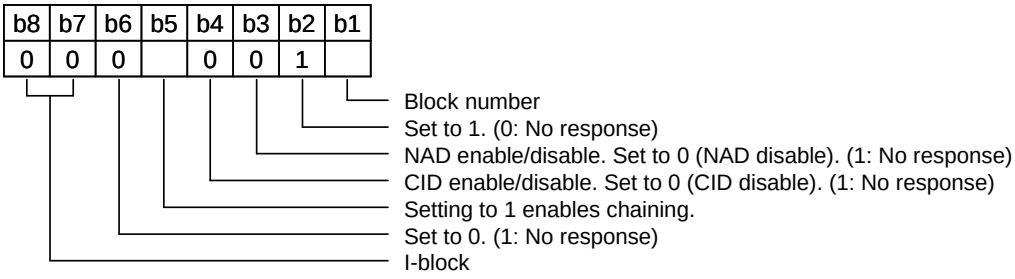

Figure 4-16 I-block Coding

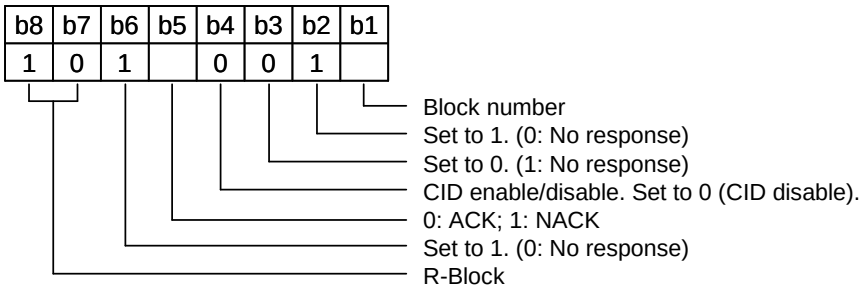

Figure 4-17 R-block Coding

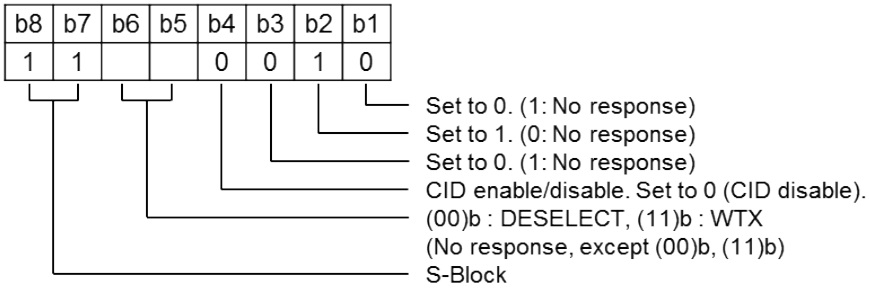

Figure 4-18 S-block Coding

4.3.4 Block Control

The block number rule for ISO/IEC14443-4 I-block is given in Table 4-15. The block control rule and whether to be supported by this RFID are shown in Table 4-16.

Table 4-15 Block Number Rules

Applied to	No.	Rule
Reader/ Writer	RuleA	Set the initial value of reader/writer block number to 0 whenever activating RFID.
	RuleB	When I-block or R(ACK) block whose block number is equal to the current one is received, toggle the current block number before sending the block number to RFID.
RFID	RuleC	Set the initial value of RFID block number to 1 whenever activating RFID.
	RuleD	When I-block is received, toggle the current block number before sending the block.
	RuleE	When R(ACK) block whose block number is not equal to the current one is received, RFID toggles the current block number before sending the block. When R(NAK) is received, do not toggle the block number.

Table 4-16 Block Control Rule

Applied to	No.	Rule	By this RFID
Reader/ Writer and RFID	Rule1	Send the first block from reader/writer.	Supported
	Rule2	When I-block indicating chaining is received, send an affirmative response to the block, with R(ACK) block.	Supported
	Rule3	S-block is used only for pair. Send a response to S(...)block whenever S(...)block is requested.	DESELECT WTX supported
Reader/ Writer	Rule4	When an illegal block is received or FWT timeout occurs, send R(NAK) block (except while RFID is in chaining or when S(DESELECT) is executed).	-
	Rule5	When an illegal block is received or FWT timeout occurs while RFID is in chaining, send R(ACK) block.	-
	Rule6	When R(ACK) block is received and its block number is not equal to the block number of reader/writer, re-send the last I-block.	-
	Rule7	When R(ACK) block is received and its block number is equal to the block number of reader/writer, continue chaining.	-
	Rule8	When a response to S(DESELECT) is not sent with no error, re-send S(DESELECT) or ignore the RFID.	-
RFID	Rule9	RFID can send S(WTX) block, instead of I-block or R(ACK) block.	Supported
	Rule10	When I-block not indicating chaining is not received, send an affirmative response.	Supported
	Rule11	When R(ACK) or R(NAK) block is received and its block number is equal to the block number of RFID, re-send the last frame.	Supported
	Rule12	When R(NAK) block is received and its block number is not equal to the block number of RFID, send R(ACK).	Supported
	Rule13	When R(ACK) block is received and its block number is not equal to the block number of RFID and RFID is in chaining, continue chaining.	Supported

4.3.5 Upper Command Format

The upper commands (SELECT, READ, WRITE) are compliant with the APDU (Application Protocol Data Unit) format of ISO/IEC7816-4.

Figure 4-19 shows the command APDU format. Table 4-17 shows the command APDU field definition. Figure 4-20 gives the response APDU format. Table 4-18 gives the response APDU field definition.

The command APDU format shown in Figure 4-19 and the response APDU format shown in Figure 4-20 are configured in the information field INF of the ISO/IEC14443-4 block format shown in Figure 4-15.

CLA	INS	P1	P2	Lc	Data	Le
Class byte	Instruction byte	Param byte	Param byte	Lc field	Data byte (Lc bytes)	Le field

Figure 4-19 Command APDU Format

Table 4-17 Command APDU Field Definition

Field name	Byte length	Definition
Class byte	1	Fixed to 0x00
Instruction byte	1	Instruction code
Param byte 1	1	Command parameter
Param byte 2	1	Command parameter
Lc field	1	If a data byte exists in the command APDU, set the byte length of n; if not, omit the data byte.
Data byte	n	Data block (can be omitted)
Le field	1	If a data byte exists in the response APDU, set the byte length; if not, omit the data byte.

Response Body	SW1	SW2
Data byte	Status word 1	Status word 2

Figure 4-20 Response APDU Format

Table 4-18 Response APDU Field Definition

Field name	Byte length	Definition
Data byte	n	Data block (can be omitted)
Status word 1	1	Status information
Status word 2	1	Status information

4.3.6 State Transition Diagram

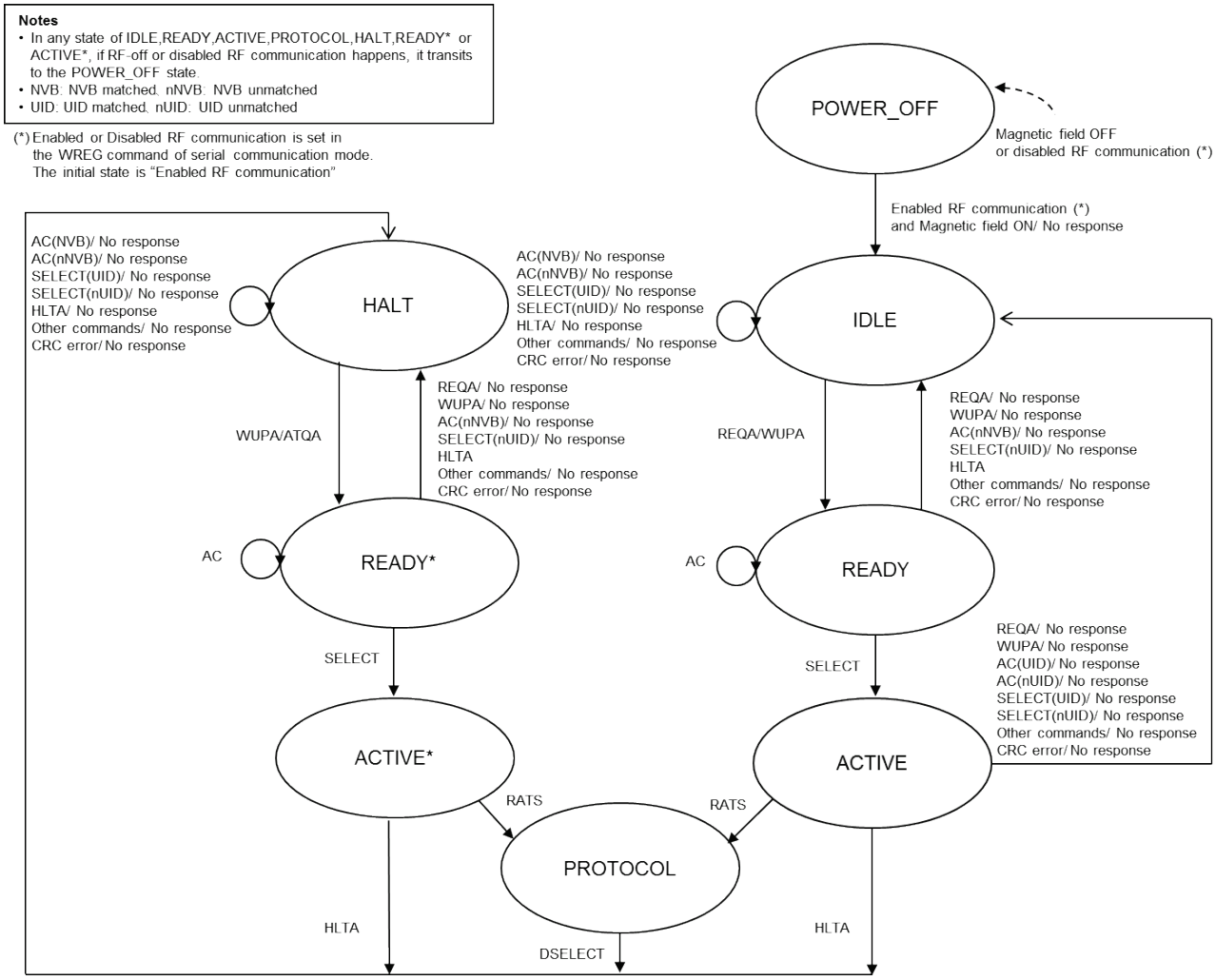

Figure 4-21 State Transition Diagram for Operation Based on ISO/IEC14443 TypeA

4.3.7 Flow Chart

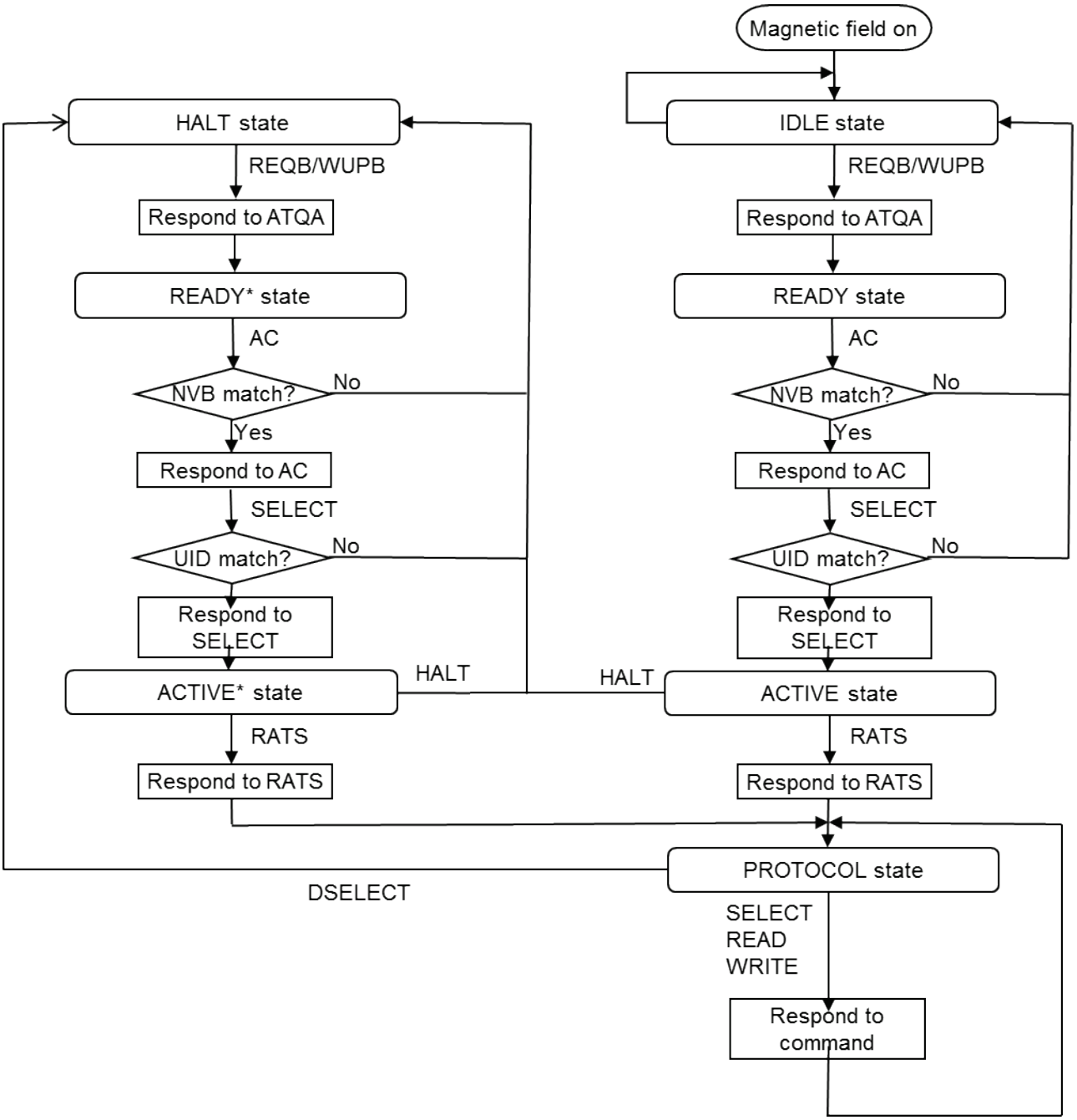

Figure 4-22 Flow Chart of Command Processing Based on ISO/IEC14443 TypeA

4.3.8 Various Settings

This section describes the parameter settings and operation specifications based on ISO/IEC14443 TypeA for this RFID.

4.3.8.1 PUPI (Pseudo-Unique PICC Identifier)

Figure 4-23 shows the format of PUPI (Pseudo-Unique PICC Identifier). PUPI is an identifier of PICC (Proximity IC Card). The value of PUPI is set in the lower 4 bytes of the system area IDM.

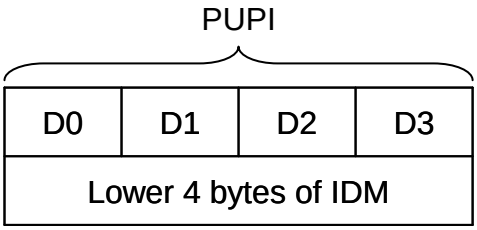

Figure 4-23 PUPI Format

4.3.8.2 FWI (Frame Waiting Time Integer)

Figure 4-24 shows the format of FWI (Frame Waiting time Integer). FWI is used to specify the maximum wait time until the PICC sends a response after receiving a command. The value of FWI is set in the upper 4 bytes of the system area HW3.

msb							lsb
bit7	bit6	bit5	bit4	bit3	bit2	bit1	bit0
FWI				WTXM			

Figure 4-24 FWI Format

The maximum wait time is calculated by the following formula:

$$\text{Maximum wait time} = T \times 2^{FWI}$$

T: 256 × 16/fc (fc = 13.56 MHz, approx. 0.302 ms)

FWI: 0 to 14 (integer)

The maximum wait time ranges from approximately 0.302 ms (min.; FWI = 0) to approximately 4.949 s (max; FWI = 14).

4.3.8.3 WTXM (waiting time extension multiplier)

Figure 4-24 shows the format of WTXM (waiting time extension multiplier). The S(WTX) block which require an extension of the frame waiting time of PICC consists of 2 bytes, and the lower 6bit of second byte set the WTMX.

On this RFID, the upper 2bits of WTXM specified by NFC forum are fixed to 0, and the lower 4bits of WTXM are set in the lower 4 bits of the system area HW3.

Waiting time to be requested is as follows.

"Time corresponding to the set value of FWI" x "Setting of WTXM"

4.3.8.4 File System

This RFID is compliant with the command specification of ISO/IEC7816-4 standards, but does not implement the file system functionality of the standards. However, in order to ensure the compatibility with communication to reader/writer, the SELECT command to select files is set to "Normal response" when specifying the given parameters. For information about how to set the parameters of the SELECT command, see 4.3.9.6 SELECT.

4.3.8.5 Address

In ISO/IEC14443 TypeA (command is compliant with ISO/IEC7816-4), the addresses of READ and WRITE commands are specified by bytes P1 and P2 of the command APDU. (See Section 4.3.5 Upper Command Format)

Figure 4-25 shows the address specification format. Set bit 7 of byte P1 to 0; setting to 1 cause an error.

	P1								P2							
	msb							lsb	msb							lsb
	Bit 7	Bit 6	Bit 5	Bit 4	Bit 3	Bit 2	Bit 1	Bit 0	Bit 7	Bit 6	Bit 5	Bit 4	Bit 3	Bit 2	Bit 1	Bit 0
Definition	-	Start address														
This RFID's setting value	0	Mode setting			Start address designation											

Figure 4-25 Address Specification

This RFID uses address to specify communication in tunnel mode. Table 4-19 shows mode settings including communication in tunnel mode with bits 6 to 4 of byte P1.

Table 4-19 Mode Settings

Byte P1			Meaning
Bit 6	Bit 5	Bit 4	Communication mode
0	0	0	RF communication mode
1	0	0	Tunnel mode
Others			Reserved (Setting this field causes an error.)

In addition, Table 4-20 shows the setting unit for address by communication mode.

Table 4-20 Setting Units for Address

Setting unit for address (n: integer)
1×n bytes

4.3.8.6 Data

All “DATA” of READ and WRITE command are considered as actual data.

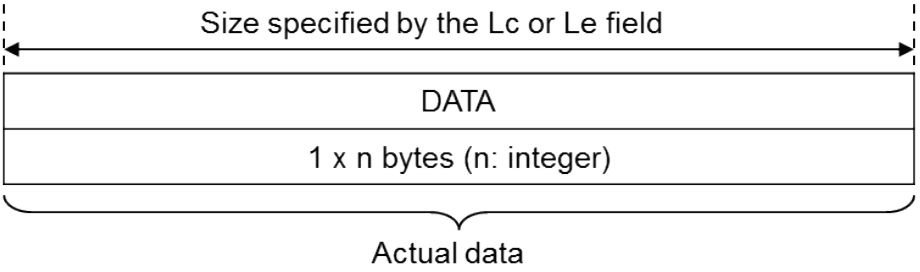

Figure 4-26 Data Block Structure

4.3.8.7 Status Word

Table 4-21 Status Word lists the meaning of statuses.

Table 4-21 Status Word

SW1	SW2	Meaning	Description
0x90	0x00	Normal end	Terminated normally.
0x50	0x00	Tunnel mode error	No response from the host
0x51	0x00	Tunnel mode error	The host responded with an error.
0x64	0x00	RF communication mode error	Conflict with host communication occurs. Cannot access to FeRAM
0x67	0x00	Lc/Le specification error (*1)	・Lc and Le were out of the specification. ・Lc were not 0x10 on VERIFY command
0x69	0x83	Verify maximum error	・Password number of comparisons exceeds the upper limit
0x69	0x84	Verify error	・Password mismatch
0x6A	0x86	P1-P2 specification error	・Bit 7 of P1 was not 0. (*2) ・Illegal mode setting (RFU setting) ・Specified outside FeRAM ・Both of P1 and P2 were not 0x00 on VERIFY command
0x6D	0x00	INS specification error	Illegal INS setting (Specified an unimplemented command)
0x6E	0x00	CLA specification error	Illegal CLA setting (except 0x00)
0x6F	0x00	Self-diagnosis error (*1)	・Write access to FeRAM-Read-Only area (RORF setting) ・

(*1) For more information about these errors, see the Administrator's Manual.

(*2) In the case of SELECT command, it may become "Lc, Le error 0x6700" depending on the combination of values of P1,P2.

4.3.9 Command

The commands based on ISO/IEC14443 TypeA supported by this RFID fall into two types:

Commands defined in ISO/IEC14443-3 and ISO/IEC14443-4, and APDU commands defined in ISO/IEC7816-4 to be sent in the ISO/IEC14443-4 format.

These commands are shown in Table 4-22 and Table 4-23.

For information about the command format, see Section 4.3.2 Frame Format and Section 4.3.5 Upper Command Format.

Additionally, protocol control such as chaining, ACK/NAK response (R-Block), DESELECT, and WTX (S-Block) are also supported. For its detail, see Section 4.3.3 Protocol Control.

Subsequent sections describe each command in detail.

Table 4-22 ISO/IEC14443-3/4 TypeA Command List

Name	Code	Description
REQA	0x26	Catches the RFID. Used by reader/writer.
WUPA	0x52	Catches the RFID. Used by reader/writer.
ANTICOLLISION/ SELECT	0x93	Identifies the RFID. Used by reader/writer.
HLTA	0x5000	Transitions the RFID to a HALT state. Used by reader/writer.
RATS	0xE0	Requires protocol signal information to the RFID. Used by reader/writer.

Table 4-23 APDU Command List

Name	INS	Description
SELECT	0xA4	Selects the file.
VERIFY	0x20	Perform a password authentication.
READ	0xB0	Reads the data of RFID from reader/writer. While in tunnel mode, reads the data of the host from reader/writer.
WRITE	0xD6	Writes a data to RFID from reader/writer. While in tunnel mode, writes a data to the host.

4.3.9.1 REQA/WUPA (ISO/IEC14443-3 TypeA command)

■ Purpose

Catches the RFID. Used by reader/writer

・REQA is used when the RFID is in IDLE state.

・WUPA is used when the RFID is in HALT state. (It can be also used in IDLE state.)

・Short Frame Format

■ Command message

● Format

Command code
1 byte

● Data field

Field	Setting	Remarks
Command code	REQA: 0x26 WUPA: 0x52	

■ Response message

● Format

1st Byte	2nd Byte	CRC_A
1 byte	1 byte	2 bytes

● Data field

Field	Output value	Remarks
1st byte	0x01 Bit7-6: UID length (Coded) 00b: Single UID length 01b: Double UID length 10b: Triple UID length 11b: prohibited Bit5: fixed to 0 Bit4-0: Prevention of bit collision (Coded) 10000b: Prevent bit collision 01000b: Prevent bit collision 00100b: Prevent bit collision 00010b: Prevent bit collision 00001b: Prevent bit collision	This RFID always operates as bit7-6 set to be 00b (Single UID length) This RFID always operates as bit4-0 set to be 00001b (Prevent bit collision)
2nd byte	0x00 bit7-4: fixed to “0000b” bit3-0: Encoding of separate, fixed to “0000b”	
CRC_A	See CRC_A ISO/IEC14443-3	

4.3.9.2 ANTICOLLISION (ISO/IEC14443-3 TypeA command)

■ Purpose

Identifies the RFID. Used by reader/writer.

ANTICOLLISION Frame Format.

■ Command message

● Format

Selection code SEL	No. of bits determined NVB
1 byte	1bytes

● Data field

Field	Setting	Remarks
Selection code SEL	SEL 0x93: Select Cascade level 1	
No. of bits determined NVB	NVB: 0x20 Bit7-4: Byte counter 0x2: Byte counter =2 0x3: Byte counter =3 0x4: Byte counter =4 0x5: Byte counter =5 0x6: Byte counter =6 0x7: Byte counter =7 Others: Unspecified Bit3-0: Bit counter 0x0: Bit counter =1 0x1: Bit counter =2 0x2: Bit counter =2 0x3: Bit counter =3 0x4: Bit counter =4 0x5: Bit counter =5 0x6: Bit counter =6 0x7: Bit counter =7 Others: Unspecified	This RFID only respond NVB=0x20 for ANTICOLLISION command

■ Response message

● Format

UID0 to UID3	BCC
4byte	1 bytes

● Data field

Field	Output value	Remarks
UID0 to UID3	See 4.3.8.1 PUPI (Pseudo-Unique PICC Identifier)	For more information about parameters, see ISO/IEC14443-3.
BCC	EX-OR of UID0 to UID3	

4.3.9.3 SELECT (ISO/IEC14443-3 TypeA command)

■ Purpose

Identifies and select the RFID. Used by reader/write

Standard Frame Format

■ Command message

● Format

Selection code SEL	No. of bits determined NVB	UID	CRC_A
1 byte	1 byte	5 bytes	2 bytes

● Data field

Field	Setting	Remarks
Selection code SEL	SEL 0x93: Select Cascade level 1	
No. of bits determined NVB	NVB: 0x70 Bit7-4: Byte counter 0x2: Byte counter =2 0x3: Byte counter =3 0x4: Byte counter =4 0x5: Byte counter =5 0x6: Byte counter =6 0x7: Byte counter =7 Others: Unspecified Bit3-0: Bit counter 0x0: Bit counter =1 0x1: Bit counter =2 0x2: Bit counter =2 0x3: Bit counter =3 0x4: Bit counter =4 0x5: Bit counter =5 0x6: Bit counter =6 0x7: Bit counter =7 Others: Unspecified	NVB=0x70 only for SELECT command
UID	40 data bits of UID CLn corresponding to the value of NVB	UID0 to UID3, and BCC
CRC_A	See CRC_A ISO/IEC14443-3	

■ Response message

● Format

SAK	CRC_A
1 byte	2 bytes

- Data field

Field	Output value	Remarks
SAK	0x20 Bit7-0: SAK (Coded) xxxx x1xxb: UID (cascade bit setting) incompleted xx1x x0xxb: UID completed, and PICC adapted to ISO/IEC14443-3 xx0x x0xxb: UID completed, and PICC not adapted to ISO/IEC14443-3	For details, refer to ISO/IEC14443-3
CRC_A	See CRC_A ISO/IEC14443-3	

4.3.9.4 HLTA (ISO/IEC14443-3 TypeA command)

■ Purpose

Causes the RFID to transition to HALT state. Used by reader/writer.

Standard Flame Format

■ Command message

● Format

Command code	CRC_A
2bytes	2 bytes

● Data field

Field	Setting	Remarks
Command code	0x5000	
CRC_A	See CRC_A ISO/IEC14443-3.	

■ Response message

RFID don’t response for 1ms from the HLTA command completion.

4.3.9.5 RATS (ISO/IEC14443-4 TypeA command)

■ Purpose

Requires protocol signal information to RFID. Used by reader/writer

Standard Frame Format

■ Command message

● Format

Start byte	Parameter byte	CRC_A
1 byte	1 byte	2 bytes

● Data field

Field	Setting	Remarks
Start byte	0xE0	
Parameter byte	FSDI, CID (Coded) Bit7-4: FSDI (Coded) 0x0: FSD =16bytes 0x1: FSD =24bytes 0x2: FSD =32bytes 0x3: FSD =40bytes 0x4: FSD =48bytes 0x5: FSD =64bytes 0x6: FSD =96bytes 0x7: FSD =128bytes 0x8: FSD =256bytes 0xF: FSD =256bytes Others: RFU Bit3-0: CID Identifier to PCC (Logical address)	This RFID always operates as follows: ・FSDI set to 0xF (when FSDI are set to 0x9 – 0xE) ・CID is specified by reader/writer (Note) FSD: The maximum frame size that PCD can receive CID: The logical address of PICC CID must be set a value except 15. If 15 is set, it goes no response and transits to IDLE or HALT state
CRC_A	See CRC_A ISO/IEC14443-3	

■ Response message

● Format

Length byte	Constitution byte	Connection Information			Control info	CRC_A
TL	TO	TA(1)	TB(1)	TC(1)	T1 to Tk	
1 byte	1 byte	1 byte	1 byte	1 byte	K bytes	2 bytes

- Data field

Field	Output value	Remarks
Length byte TL	0x05 Specify the length of ATS, including TL itself. The CRC byte is not included in TL. 0xxb: UID completed, and PICC not adapted to ISO/IEC14443-3	For details, refer to ISO/IEC14443-3
Constitution byte TO	0x78 Bit7: Fixed to 0 Bit6-4: Y(1) (Coded) Bit6=1: TA(1) is included Bit5=1: TB(1) is included Bit4=1: TC(1) is included Bit3-0: FSCI, FSC (Coded) Encoding is the same as FSD	(Note) FSD: The maximum frame size that PCD can receive
Connection Information byte TA(1)	0x80 Bit7: Fixed to 1 (The same data rate in both communication direction) Bit6-4: DS Bit3: Fixed to 0 Bit2-0: DR	This RFID supports 106kbps symmetric communication. (Note) DS: PCD to PICC data rate DR: PCD to PICC data rate
Connection Information byte TB(1)	0xX0 Bit7-4: FWI Use FWI parameter (1 to 14 available) Bit3-0: SFGI Fixed to 0000b (1 to 14 available) SFGT = (256 x 16 /fc)^SFGI	(Note) FWI: Waiting time for frame SFGT: Waiting time for start frame (Waiting time for frame after ATS)
Connection Information byte TC(1)	0x00 Bit1: When 1 is set, CID is supported Bit0: When 1 is set, NAD is supported	
Control information byte T1 to Tk	On ISO/IEC7816-4 rule	Control information bytes are not added.
CRC_A	See CRC_A ISO/IEC14443-3	

4.3.9.6 SELECT (APDU command)

■ Purpose

Selects the file.

This RFID conforms to the NDEF Ver. 2.0 of NFC forum Type 4 tag and therefore is capable of performing the following selections: EF file, NDEF application, CC file, or NDEF file.

For operations at CC file or NDEF file selections, see 4.3.10.3 CC File and 4.3.10.4 NDEF file.

■ Command message

● Format

CLA	INS	P1	P2	Lc	Data	Le
1 byte	1 byte	1 byte	1 byte	1 byte	n bytes	1 byte

● Data field

Field	Setting	Remarks
CLA	0x00	Responds with an error, except 0x00.
INS	0xA4	
P1	0x00: Selection by a file identifier 0x02: EF file selection 0x04: Selection by DF name (Selection by an application identifier)	A combination except follows is an error reply P1,P2=0x020C: EF file choice P1,P2=0x0400: NDEF tag application choice P1,P2=0x000C: EF file, CC file or NDEF file choice
P2	0x00: Designate the corresponding file. 0x0C: FCI generates no response.	
Lc	Sets the byte length of the Data block. ・ Setting range: NDEF tag application selection (when P1, P2 = 0x0400): 0x07(7) Other than the above: 0x02(2)	Responds with an error, except the setting range on the left column.
Data	NDEF tag application selection (when P1, P2 = 0x0400): 0xD2760000850101 CC file selection (when P1, P2 = 000C): 0xE103 NDEF file selection (when P1, P2 = 000C): 0x0103 EF file selection (when P1, P2 = 020C): Don't care (This field is set by EF-ID.)	Responds with an error, except the settings on the left column.
Le	Sets the byte length of the Data block for response. ・ Setting range: 0x00 (with field only for NDEF tag application selection)	Responds with an error, except the setting range on the left column.

- Setting examples

・EF file selection

CLA	INS	P1	P2	Lc	Data
0x00	0xA4	0x02	0x0C	0x02	0xXXXX

In case of the P1,P2=0x020C setting, any value of Data(EF-ID) is settable.

CLA	INS	P1	P2	Lc	Data
0x00	0xA4	0x02	0x0C	0x02	0xXXXX

In case of the P1,P2=0x000C setting, please set Data(EF-ID) any place other than 0xE103 and 0x0103.

・NDEF tag application selection

CLA	INS	P1	P2	Lc	Data	Le
0x00	0xA4	0x04	0x00	0x07	0xD2760000850101	0x00

In case of the NDEF tag application choice, only the value mentioned above is settable.

・CC file selection

CLA	INS	P1	P2	Lc	Data
0x00	0xA4	0x00	0x0C	0x02	0xE103

In case of the CC file application choice, only the value mentioned above is settable.

・NDEF file selection

CLA	INS	P1	P2	Lc	Data
0x00	0xA4	0x00	0x0C	0x02	0x0103

In case of the NDEF file application choice, only the value mentioned above is settable.
ID(File ID) of the NDEF file in this RFID is 0x0103 fixations.

■ Response message

- Format

SW1	SW2
1 byte	1 byte

- Data field

Field	Output value	Remarks
SW1	See 4.3.8.7 Status Word.	
SW2	See 4.3.8.7 Status Word.	

4.3.9.7 READ (APDU command)

■ Purpose

Reads the data. In RF mode, readout the data of RFID from reader/writer, and in tunnel mode, reads the data of the host from reader/writer.

■ Command message

● Format

CLA	INS	P1	P2	Le
1 byte	1 byte	1 byte	1 byte	1 byte

● Data field

Field	Setting	Remarks
CLA	0x00	Responds with an error, except 0x00.
INS	0xB0	
P1	Sets the start address to be read. ・See 4.3.8.5 Address.	
P2	Sets the start address to be read. ・See 4.3.8.5 Address	
Le	Sets the byte length of data to be read. ・Setting range: 0x01(1) to 0xFB(251) ・Sets to 16×n (n: integer) for encrypted communication.	Maximum value of n is 15 for encrypted communication.

■ Response message

● Format

Data	SW1	SW2
1 to 251 bytes	1 byte	1 byte

● Data field

Field	Output value	Remarks
Data	Sets the data to be read. ・See 4.3.8.6 Data.	Omitted except when status word ends normally.
SW1	See 4.3.8.7 Status Word.	
SW2	See 4.3.8.7 Status Word.	

4.3.9.8 WRITE (APDU command)

■ Purpose

Writes a data. In RF mode, write a data to RFID from reader/writer, and in tunnel mode, writes a data to the host.

■ Command message

● Format

CLA	INS	P1	P2	Lc	Data
1 byte	1 byte	1 byte	1 byte	1 byte	1 to 248 bytes

● Data field

Field	Setting	Remarks
CLA	0x00	Responds with an error, except 0x00.
INS	0xD6	
P1	Sets the start address of data to be written. ・See 4.3.8.5 Address	
P2	Sets the start address of data to be written. ・See 4.3.8.5 Address	
Lc	Sets the byte length of the Data block. ・Setting range: 0x01(1) to 0xF8(248) ・Sets to 16×n (n: integer) for encrypted communication.	Maximum value of n is 15 for encrypted communication.
Data	Sets the data to be written. ・See 4.3.8.6 Data.	

■ Response message

● Format

SW1	SW2
1 byte	1 byte

● Data field

Field	Output value	Remarks
SW1	See 4.3.8.7 Status Word.	
SW2	See 4.3.8.7 Status Word.	

4.3.9.9 VERIFY (APDU command)

■ Purpose

Perform the password authentication.

■ Command message

● Format

CLA	INS	P1	P2	Lc	Data
1 byte	1 byte	1 byte	1 byte	1 byte	16 bytes

● Data field

Field	Setting	Remarks
CLA	0x00	Responds with an error, except 0x00.
INS	0x20	Responds with an error, except 0x20.
P1	0x00	Responds with an error, except 0x00.
P2	0x00	Responds with an error, except 0x00.
Lc	0x10. byte length of the Data block	Responds with an error, except 0x10.
Data	Password data	

■ Response message

● Format

SW1	SW2
1 byte	1 byte

● Data field

Field	Output value	Remarks
SW1	See 4.3.8.7 Status Word.	
SW2	See 4.3.8.7 Status Word.	

4.3.10 NDEF

This RFID is based on Type3 Tag and Type4 Tag of NFC Forum and supports data exchange of a NDEF format.

This section explains Type4 Tag. In addition, 4.2.7 NDEF explains Type3 Tag of NFC Forum.

This RFID supports the NDEF format of Type4 Tag of Version 2.0.

Data exchange of NDEF can be performed by performing a predetermined setup to the user area of FeRAM.

Please refer to the applicable written standards of NFC Forum for the details of NDEF.

4.3.10.1 Memory Map

Fig 4-27 shows the memory map in NDEF format.

CC file is assigned to Block 59. NDEF file is assigned to part of Block 0, and Blocks 1 to58.

Block	Address	0x0	0x1	0x2	0x3	0x4	0x5	0x6	0x7	0x8	0x9	0xA	0xB	0xC	0xD	0xE	0xF
0	0x0000																
1	0x0010	NDEF Data Area (Message)															
2	0x0020																
3	0x0030																
4	0x0040																
5	0x0050																
6	0x0060																
7	0x0070																
8	0x0080																
9	0x0090																
10	0x00A0																
11	0x00B0																
12	0x00C0																
13	0x00D0																
14	0x00E0																
15	0x00F0																
16	0x0100																
17	0x0110																
18	0x0120																
19	0x0130																
20	0x0140																
21	0x0150																
22	0x0160																
23	0x0170																
24	0x0180																
:	:																
58	0x03A0																
59	0x03B0	CC File Area															
60	0x03C0	System Area															
61	0x03D0																
62	0x03E0																
63	0x03F0																

Figure 4-27 Memory map when NDEF is used

4.3.10.2 NDEF Tag Application Selection

This selection requires a SELECT command.

4.3.10.3 CC File

This selection requires a SELECT command.

While in CC file selection, CC file starts from the beginning of Block 59 (physical address 0x03B0).

See Table 4-24 shows a setting example of the CC file.

Table 4-24 Example of the CC file

Select address	Physical address	Size	Value	Contents	Remarks
0x0000 ～0x0001	0x03B0 ～0x03B1	2Byte	0x000F	CCLEN (Length of CC file)	
0x0002	0x03B2	1Byte	0x20	Mapping Version	Please set 0x20 in this RFID.
0x0003 ～0x0004	0x03B3 ～0x03B4	2Byte	0x003B	MLe (The biggest response length of the Read command)	
0x0005 ～0x0006	0x03B5 ～0x03B6	2Byte	0x0034	Mlc (The biggest response length of the Write command)	
0x0007	0x03B7	1Byte	0x04	T field of the NDEF File Control TLV	
0x0008	0x03B8	1Byte	0x06	L field of the NDEF File Control TLV	
0x0009 ～0x000A	0x03B9 ～0x03BA	6Byte	0x0103	V field of the NDEF File Control TLV	File ID Please set 0x 0103 in this RFID.
0x000B ～0x000C	0x03BB ～0x03BC		0x0032		The biggest NDEF size
0x000D	0x03BD		0x00		Read access condition
0x000E	0x03BE		0x00		Write access condition

4.3.10.4 NDEF File

This selection requires a SELECT command.

Table 4-25 shows empty NDEF file as a setting example of the NDEF file.

Table 4-25 setting example of the NDEF file(when NDEF file is empty)

Select address	Physical address	Size	Value	Contents	Remarks
0x0000 ～0x0001	0x000C ～0x000D	2Byte	0x0003	NLEN (NDEF message length)	The size of NLEN is 2 Byte fixations.
0x0002 ～0x0004	0x0010 ～0x0012	3Byte	0xD00000	NDEF message	The value shows an empty message

The access to the NDEF file in the NDEF file choice state, I link NLEN and NDEF message and, only other than only NLEN or NDEF message, can access it by 1 command.

In the NDEF file choice state, physical address 0x000C of Block0 the NDEF file top, the top (physical address 0x0010) becomes address 0x0002 of the NDEF file) of Block1. In other words, the NLEN field of the NDEF file is placed in 0x000C - 0x000D of the physical address, and the NDEF message field is placed by 0x0010 of the physical address.

4.4 ISO/IEC14443 TypeB Specification

This section describes the ISO/IEC14443 TypeB specification.

4.4.1 Communication Specification

Table 4-26 provides the communication specifications of this RFID based on ISO/IEC14443 TypeB.

Table 4-26 ISO/IEC14443 TypeB Communication Specification

Carrier frequency		13.56 MHz
Modulation mode, Bit coding	R/W→RFID	ASK10%, NRZ coding
	RFID→R/W	Load modulation, BPSK coding (848 kHz subcarrier)
Data rate		106 kbps / 212 kbps / 424kbps
Character transmission		・LSB-first ・Data (8 bits) ・Start bit (1 bit) ・Stop bit (1 bit)

4.4.2 Frame Format

Figure 4-28 illustrates the ISO/IEC14443 TypeB frame format. SOF(Start Of Frame) and EOF(End Of Frame) are added to a data field. The maximum size of data field is 256 bytes in this RFID.

SOF	Data field (maximum 256 bytes)	EOF

Figure 4-28 ISO/IEC14443 TypeB Frame Format

Additionally, the ISO/IEC14443-4 block format shown in Figure 4-29 is applied to the data field shown in Figure 4-28. This RFID does not support CID and NAD of the first field, so adding them is prohibited.

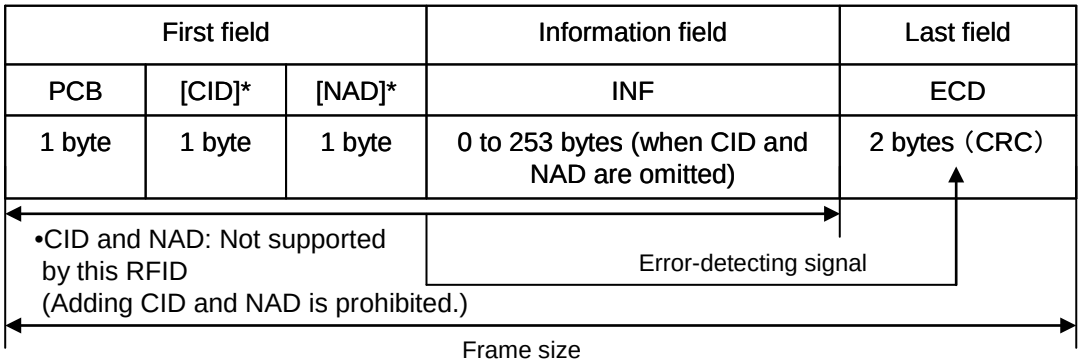

Figure 4-29 ISO/IEC14443-4 Block Format

Table 4-27 ISO/IEC14443-4 Field Definition

Field name	Byte length	Definition
PCB	1	Protocol Control Byte. See 4.3.3 Protocol Control
CID	1	Card Identifier (optional) Used to identify RFID. (Not supported by this RFID; not added.)
NAD	1	Node Address (optional). Used to establish a logical channel. (Not supported by this RFID; not added.)
INF	n	Command message or response message
ECD	2	See CRC_B ISO/IEC14443-3.

4.4.3 Protocol Control

For about Protocol Control, it's the same as ISO/IEC14443 TypeA specifications.

Refer to 4.3.3 Protocol Control.

4.4.4 Block Control

For about Block Control, it's the same as ISO/IEC14443 TypeA specifications.

Refer to 4.3.4 Block Control.

4.4.5 Upper Command Format

For about Upper Command Format, it's the same as ISO/IEC14443 TypeA specifications.

Refer to 4.3.5 Upper Command Format.

4.4.6 State Transition Diagram

Figure 4-30 provides the state transition diagram for this RFID's operation based on ISO/IEC14443 TypeB.

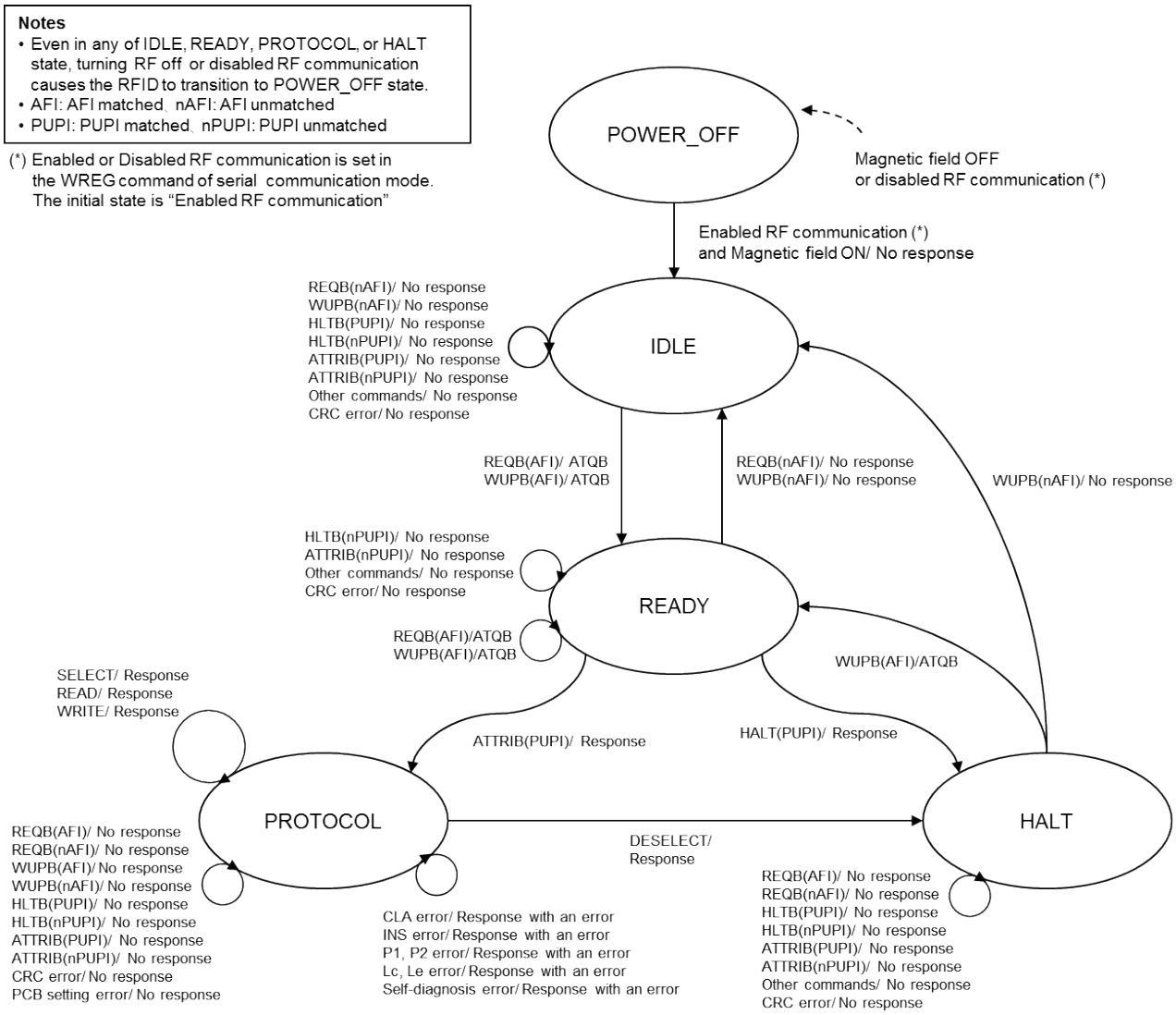

Figure 4-30 State Transition Diagram for Operation Based on ISO/IEC14443 TypeB

4.4.7 Flow Chart

Figure 4-31 illustrates the flow chart for this RFID's command processing based on ISO/IEC14443 TypeB.

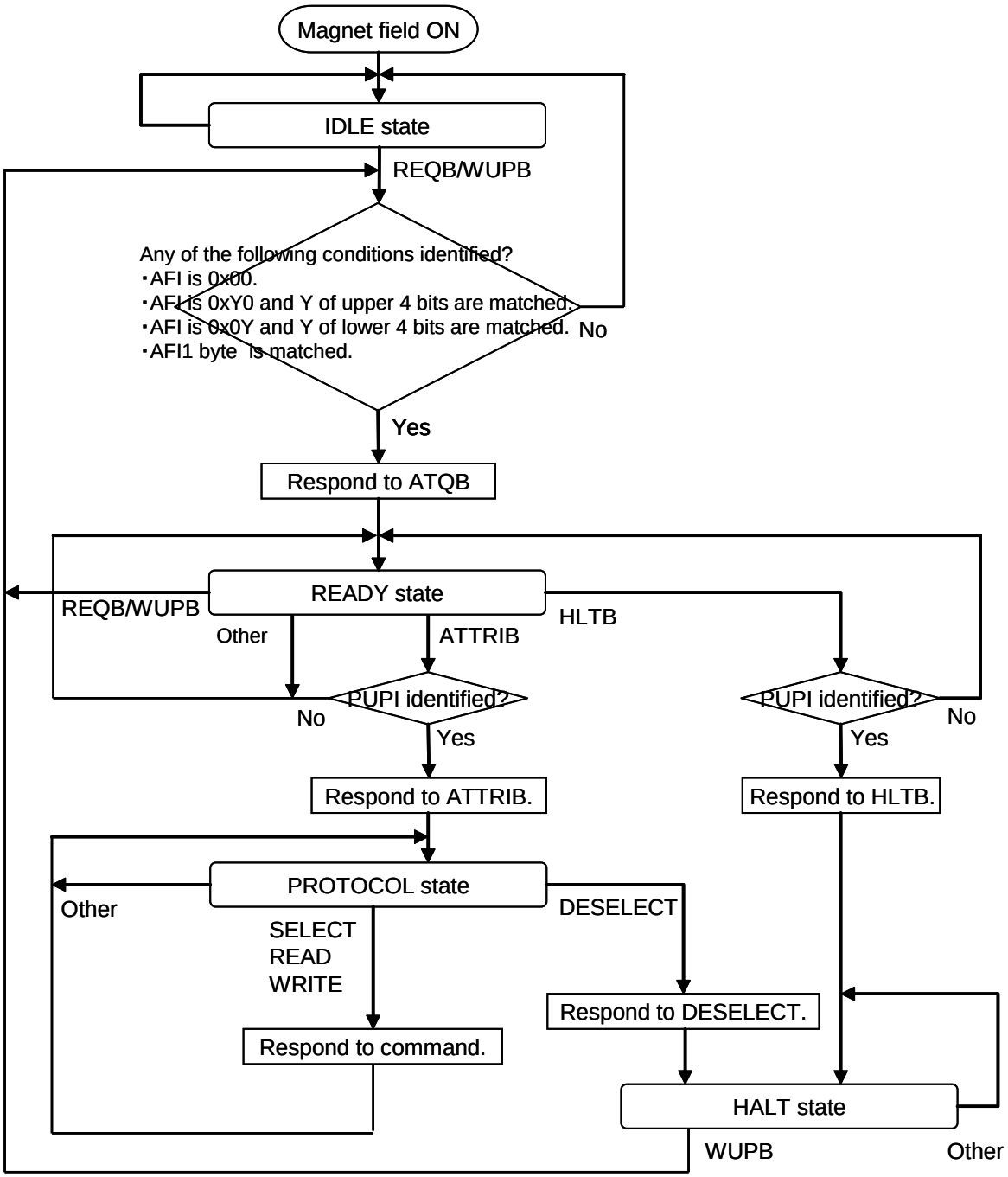

Figure 4-31 Flow Chart of Command Processing Based on ISO/IEC14443 TypeB

4.4.8 Various Settings

This section describes the parameter settings and operation specifications based on ISO/IEC14443 TypeB for this RFID.

4.4.8.1 AFI (Application Family Identifier)

Figure 4-32 shows the format of AFI (Application Family Identifier). The value of AFI is set in the system area AFI.

AFI is a parameter specified by the REQB command. The response operation to REQB command in this RFID is shown in Table 4-28. For information about the setting values for AFI, see ISO/IEC14443-3.

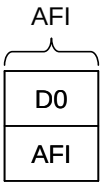

Figure 4-32 AFI Format

Table 4-28 REQB Command Response Operation

REQB command AFI setting value	RFID's response to REQB command
0x00	Responds regardless of the system area AFI setting.
0xY0	Responds when the value Y of the upper 4 bits of the REQB command's AFI is matched.
0x0Y	Responds when the value Y of the lower 4 bits of the REQB command's AFI is matched.
Other	Responds only when the setting value of the REQB command's AFI matches the value specified in the system area AFI.

4.4.8.2 PUPI (Pseudo-Unique PICC Identifier)

For about PUPI, it’s the same as ISO/IEC14443 TypeA specifications.

Refer to 4.3.8.1 PUPI (Pseudo-Unique PICC Identifier).

4.4.8.3 FWI (Frame Waiting Time Integer)

For about FWI, it’s the same as ISO/IEC14443 TypeA specifications.

Refer to 4.3.8.2 FWI (Frame Waiting Time Integer).

4.4.8.4 WTXM (waiting time extension multiplier)

For about WTXM, it's the same as ISO/IEC14443 TypeA specifications.

Refer to 4.3.8.3 WTXM (waiting time extension multiplier).

4.4.8.5 File System

For about File System, it's the same as ISO/IEC14443 TypeA specifications.

Refer to 4.3.8.4 File System.

4.4.8.6 Address

For about Addressing, it's the same as ISO/IEC14443 TypeA specifications.

Refer to 4.3.8.5 Address.

4.4.8.7 Data

For about the data structure, it's the same as ISO/IEC14443 TypeA specifications.

Refer to 4.3.8.6 Data.

4.4.8.8 Status Word

For about the Status Word, it's the same as ISO/IEC14443 TypeA specifications.

Refer to 4.3.8.7 Status Word

4.4.9 Command

The commands based on ISO/IEC14443 TypeB supported by this RFID fall into two types:

Commands defined in ISO/IEC14443-3, and APDU commands defined in ISO/IEC7816-4 to be sent in the ISO/IEC14443-4 format.

These commands are shown in Table 4-29 and Table 4-30.

APDU command is the same as ISO/IEC14443 TypeA specifications. Refer to the corresponding section of 4.3.9 Command.

For information about the command format, see Section 4.4.2 Frame Format and Section 4.4.5 Upper Command Format.

Additionally, protocol control such as chaining, ACK/NAK response (R-Block), DESELECT (S-Block) ,and WTX are also supported. For its detail, see Section 4.4.3 Protocol Control.

Subsequent sections describe each command in detail.

Table 4-29 ISO/IEC14443-3 TypeB Command List

Name	Code	Description
REQB/WUPB	0x05	Identifies the RFID. Used by reader/writer.
ATTRIB	0x1D	Exchanges protocol signal information between reader/writer and RFID, and causes the RFID to transition to the state in which command processing is enabled.
HLTB	0x50	Transitions the RFID to a HALT state. Used by reader/writer.

Table 4-30 APDU Command List

Name	INS	Description
SELECT	0xA4	Selects the file. (No processing is performed in this RFID.)
VERIFY	0x20	Perform a password authentication
READ	0xB0	Reads the data of RFID from reader/writer. While in tunnel mode, reads the data of the host from reader/writer.
WRITE	0xD6	Writes a data to RFID from reader/writer. While in tunnel mode, writes a data to the host.

4.4.9.1 REQB/WUPB (ISO/IEC14443-3 TypeB command)

■ Purpose

Catches and identifies the RFID. Used by reader/writer

・REQB is used when the RFID is in IDLE state.

・WUPB is used when the RFID is in HALT state. (It can be also used in IDLE state.)

■ Command message

● Format

Command code	AFI	PARAM	CRC_B
1 byte	1 byte	1 byte	2 bytes

● Data field

Field	Setting		Remarks
Command code	0x05		
AFI	0x00: Identifies all RFIDs. 0xY0: RFID whose upper 4 bits are identified responds. 0x0Y: RFID whose lower 4 bits are identified responds. Other than 0x00: RFID corresponding to the specified system code responds.		See 4.4.8.1 AFI (Application Family Identifier).
PARAM	0x00: REQB 0x08: WUPB		This RFID always operates as follows: ・Ignores the setting of bits 7-5. ・Recognizes the number N of Slots is 1 (always responds with ATQB) even when bits 2-0 are set to any of the values (including PFU).
	Bits 7-5	RFU (Set to 000b.)	
	Bit 4	0: Extension ATQB not supported 1: Extension ATQB supported	
	Bit 3	0: REQB 1: WUPB	
	Bits 2-0	000b: Slot count N = 1 001b: Slot count N = 2 010b: Slot count N = 4 011b: Slot count N = 8 100b: Slot count N = 16 101b: RFU 110b: RFU	
CRC_B	See CRC_B ISO/IEC14443-3.		

■ Response message

● Format

Response code	PUPI	Application data	Protocol info	CRC_B
1 byte	4 bytes	4 bytes	3 bytes	2 bytes

● Data field

Field	Output value		Remarks
response code	0x50 (ATQB)		
PUPI	See 4.2.5.2 PICC (Proximity IC Card) Identifier.		
Application Data	0x00000000		Reserved (treated as proprietary data.)
Protocol Info	1st byte: 0xB3		For more information about parameters, see ISO/IEC14443-3. (*1) A response in the case that RFSPD is set 0 and TYPBSPD is set 1. When the RFSPD is set 1, 0x80 would be responded regardless the TYPBSPD setting. (R/W→RFID: 106 [k bps] , RFID→R/W: 106 [k bps], The speeds from R/W to RFID, from RFID to R/W are same.)
	Bits 7-0	Data rate setting: 0xB3 (*1) ・R/W→RFID: 106K, 212K ,424Kbps ・RFID→R/W: 106K, 212K ,424Kbps ・R/W→RFID, RFID→R/W (same data rate)	
	2nd byte: 0x81		
	Bits 7-4	Maximum frame size of RFID 1000b: 256 bytes	
	Bits 3-0	Protocol type: 0001b ・RFID is ISO/IEC14443-4 compliant ・Minimum reader/writer command wait time (TR2) after RFID responds: 10etu + 32/fs (fs = 848 kHz)	
	3rd byte: 0xX0 (X is a value of FWI.)		
	Bits 7-4	FWI (Frame waiting time Integer) See 4.3.8.2 FWI (Frame Waiting Time Integer).	
	Bits 3-2	ADC (Application Data Coding) 00b: Proprietary Application Data	
	Bits 1-0	FO (Frame Option) 00b: NAD, CID not supported	
CRC_B	See CRC_B ISO/IEC14443-3.		

4.4.9.2 ATTRIB (ISO/IEC14443-3 TypeB command)

■ Purpose

Exchanges protocol signal information between reader/writer and RFID, and causes the RFID to transition to the state in which command processing is enabled.

■ Command message

● Format

Command code	Identifier	Param1	Param2	Param3	Param4	CRC_B
1 byte	4 bytes	1 byte	1 byte	1 byte	1 byte	2 bytes

● Data field

Field	Setting		Remarks
Command code	0x1D		
Identifier	Sets PUPI for ATQB response.		
Param1	0x00		This RFID operates with: ・bits 1-0 ignored ・bits 7-6 set to 00b (when these bits are set to 11b) ・bits 5-4 set to 00b (when these bits are set to 11b) This RFID operates with: ・Minimum TR0: 64/fs ・Minimum TR1: 80/fs ・EOF not omitted ・SOF not omitted
	Bits 7-6	Minimum value of RFID response time to reader/writer command (TR0): (fs = 848 kHz) 00b: 64/fs (106 Kbps), 64/fs (212 Kbps), 64/fs(424Kbps) 01b: 48/fs (106 Kbps), 32/fs (212 Kbps), 16/fs(424Kbps) 10b: 16/fs (106 Kbps), 8/fs (212 Kbps), 4/fs(424Kbps) 11b: RFU	
	Bits 5-4	Minimum value of the time (TR1) until RFID starts data transmission after subcarrier is generated: (fs = 848 kHz) 00b: 80/fs (106 Kbps), 80/fs (212 Kbps), 80/fs(424Kbps) 01b: 64/fs (106 Kbps), 32/fs (212 Kbps), 32/fs (424K bps) 10b: 16/fs (106 Kbps), 8/fs (212K bps), 8/fs (424K bps) 11b: RFU	
	Bit 3	0: Do not omit EOF. 1: Omit EOF.	
	Bit 2	0: Do not omit SOF. 1: Omit SOF.	
	Bits 1-0	RFU (Set to 00b.)	

Param2	0xXX (For XX, see the settings below.)		・If parameters other than those on the left (communication settings or reader/writer frame size which the RFID does not support) are set, the RFID will generate no response. ・If the data rate setting differs between RFID→PCD and PCD→RFID, the RFID will generate no response.
	Bits 7-6	RFID→PCD data rate 00b: 106K bps 01b: 212K bps 10b: 424K bps 11b: Do not set	
	Bits 5-4	PCD→PICC data rate 00b: 106 Kbps 01b: 212 Kbps 10b: 424 Kbps 11b: Do not set	
	Bits 3-0	Maximum receivable frame size of reader/writer 1000b: 256 bytes 0111b: 128 bytes 0110b: 96 bytes 0101b: 64 bytes 0100b: 48 bytes 0011b: 40 bytes 0010b: 32 bytes 0001b: 24 bytes 0000b: 16 bytes	
Param3	0x01		The RFID operates with: ・no response generated expect when bits 7-4 are set to 0000b and bit 0 is set to 1b. ・bits 3-1 ignored
	Bits 7-4	RFU (Set to 0000b.)	
	Bits 3-0	Set to the same value as that for the protocol type (4 bits) of the ATQB parameter's second byte.	
Param4	0x00		The RFID operates with: ・bits 7-4 ignored ・no response generated except when bits 3-0 are set to 0000b
	Bits 7-4	RFU (Set to 0000b.)	
	Bits 3-0	0000b: RFID does not support CID.	
CRC_B	See CRC_B ISO/IEC14443-3.		

■ Response message

● Format

Response code	CRC_B
1 byte	2 bytes

● Data field

Field	Output value		Remarks
response code	1st byte: 0x10		For more information about parameters, see ISO/IEC14443-3.
	Bits 7-4	MBLI (Maximum Buffer Length Integer) 0001b: 1x of RFID frame size (256 bytes)	
	Bits 3-0	0000b: RFID does not support CID.	
CRC_B	See CRC_B ISO/IEC14443-3.		

4.4.9.3 HLTB (ISO/IEC14443-3 TypeB command)

■ Purpose

Causes the RFID to transition to a HALT state. Used by reader/writer.

■ Command message

● Format

Command code	Identifier	CRC_B
1 byte	4 bytes	2 bytes

● Data field

Field	Setting	Remarks
Command code	0x50	
Identifier	Sets the PUPI of the RFID to be set to a HALT state.	
CRC_B	See CRC_B ISO/IEC14443-3.	

■ Response message

● Format

Response code	CRC_B
1 byte	2 bytes

● Data field

Field	Output value	Remarks
Response code	0x00	
CRC_B	See CRC_B ISO/IEC14443-3.	

4.4.9.4 SELECT (APDU command)

For about SERECT, it's the same as ISO/IEC14443 TypeA specifications.
Refer to 4.3.9.6 SERECT (APDU command).

4.4.9.5 READ (APDU command)

For about READ, it's the same as ISO/IEC14443 TypeA specifications.
Refer to 4.3.9.7 READ (APDU command).

4.4.9.6 WRITE (APDU command)

For about WRITE, it's the same as ISO/IEC14443 TypeA specifications.
Refer to 4.3.9.8 WRITE (APDU command).

4.4.9.7 VERIFY (APDU command)

For about VERIFY, it's the same as ISO/IEC14443 TypeA specifications.
Refer to 4.3.9.9 VERIFY (APDU command).

4.4.10 NDEF

For about NDEF, it’s the same as ISO/IEC14443 TypeA specifications.
Refer to 4.3.10 NDEF.

Chapter 5 Serial Communication Mode

5

5.1 Serial Communication Mode Sequence

This RFID provides a serial communication function via I2C interface.

The host is the master and the RFID operates as the slave.

Figure 5-1 illustrates the sequence in serial communication mode. Each sequence is described below.

SNo.1 (slave reception): The host sends a serial communication mode command to the RFID.

SNo.2 (slave transmission): Once the RFID receives the serial communication mode command described in SNo.1, it processes the command and then sends the result to the host as the response to the command.

It is also possible to read the status of the RFID by omitting SNo.1 and performing only SNo.2.

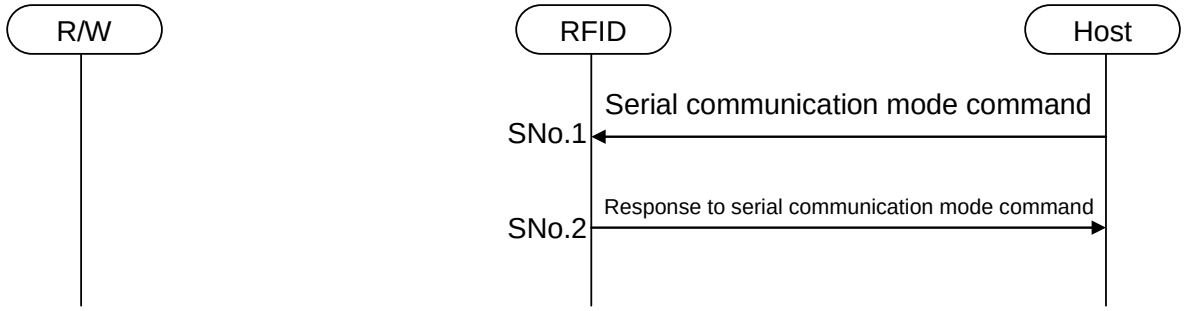

Figure 5-1 Serial Communication Mode Sequence

The commands and responses can be input or output divided at any byte position.

Command is possible to divide in 1-byte units, but the maximum number of divisions is 2 in the data field of non-response status. (It can not be divided into three or more.)

In this user's manual, that communication with divided command and response is described "Divided Access", and the communication with normal command and response is described "Normal Access".

5.2 I2C

This section describes the I2C specification.

5.2.1 Communication Specifications

Table 5-1 shows the I2C specification of this RFID.

Table 5-1 I2C Communication Specification

Data transfer method	I2C-format, Slave communication
Data rate	1kHz to 400kHz
Character transmission	・Slave address (7 bits) ・Data (8 bits)
Frame transmission and reception	・For command frame and response frame, frame dividing is available (frame division access)

5.2.2 Frame Format

Figure 5-2 illustrates the I2C frame format, Table 5-2 defines the field.

Address field	Data field
1 byte	0 to 255 bytes

Figure 5-2 Frame Format

Table 5-2 Field Definition

Field name	Byte length	Definition
Address field	1	Slave address (7 bits) and data direction bit (R/$\overline{W}$)
Data field	n	Command message or Response message

When the slave address is identified and the data direction bit is 0, a command is input from the host as slave reception.

When the slave address is identified and the data direction bit is 1, a response is sent to the host as slave transmission.

Both of the command and response frame, frame can be divided by a byte unit.

Refer to 5.2.6 Time Chart for detail.

5.2.3 Specifying Slave Address

The slave address of I2C is specified by I2C_SLV in the system area HW1 of FeRAM.
For more information, see Section 3.3 HW1 (2 bytes) in Section System Area.

5.2.4 Status

Table 5-3 and Table 5-4 show the field format and the meaning of the RFID's response status, respectively.

Table 5-3 Field Format of RFID Response Status

Field name	Bit position	Description
RFWRITE_IRQ	Bit 7	Indicates whether an RF reading interrupt is generated. 0: Not generated 1: Generated
RFREAD_IRQ	Bit 6	Indicates whether an RF writing interrupt is generated. 0: Not generated 1: Generated
RFTX_IRQ	Bit 5	Indicates whether an RF transmission interrupt is generated. 0: Not generated 1: Generated
RFDET_IRQ	Bit 4	Indicates whether a magnetic-field detect interrupt is generated. 0: Not generated 1: Generated
CMD_RES	Bits 3-0	Indicates the results of command processing. (See Table 5-4 RFID Response Status (CMD_RES Field).)

Table 5-4 RFID Response Status (CMD_RES Field)

Value	Meaning	Description
0x0	No information	Response has been sent, indicating no information
0x1	Tunnel Read Request (*1)	The tunneling mode Read detection by the RF communication
0x3	Tunnel Write Request (*1)	The tunneling mode Write detection by the RF communication
0x5	Normal end	Terminated normally
0x8	Unimplemented command error	The command was an unimplemented one.
0xA	Command parameter error (*2)	・ Address was specified outside FeRAM. ・ Data length was out of the specification.
0x9	Tunnel mode error	QUERY and ANSWER commands were issued in IDLE state and RFID command processing in progress.
0xB	Self-diagnosis error	Write access to FeRAM-Read-Only area (ROSI setting)
0x7	BUSY	RFID command processing in progress (read, write, status command only)
0xF	HOST_BUSY	Host command processing in progress

(*1) For tunnel mode, see the Chapter 7 Tunnel mode.

(*2) For more information about these errors, see the Administrator's Manual.

Table 5-5 Command response of RFID command processing in progress

Command	Response status (CMD_RES Field)	Meaning	Description
READ WRITE STATUS	0x7	BUSY	RFID command processing in progress
RREG WREG	0x5	Normal end	Normal end
	0xA	Command parameter error	Data length was out of the specification.
QUERY ANSWER	0x9	Tunnel mode error	QUERY and ANSWER commands were issued in IDLE state and RFID command processing in progress

5.2.5 Command

Table 5-6 lists the serial communication mode commands supported by this RFID.
Subsequent sections describe each command in detail.

Table 5-6 Command List in Serial Communication Mode

Name	Code	Description
READ	0x08	Reads an RFID data from the host.
WRITE	0x18	Writes a data to RFID from the host.
RREG	0x68	Reads an RFID control data from the host.
WREG	0x78	Writes a control data to RFID from the host.
STATUS	-	Reads RFID status information from the host.

5.2.5.1 READ

■ Purpose

Reads an RFID data from the host.

READ command must be issued after the RF communication stop setting by WREG command. Then, release the RF communication stop setting by WREG command after receiving the Response of the READ command.

An example of processing flow by software is described in 8.4 Restriction on I2C communication.

■ Command message

● Format

Command code	Start address	Data length n
1 byte	2 bytes	1 byte

● Data field

Field	Setting	Remarks
Command code	0x08	
Start address	Address at which to start reads	・Byte units ・Big endian format
Data length n	Size of data to be read ・ Setting range: 0x01(1) to 0xFE(254)	Byte units

■ Response message

● Format

Status	Data
1 byte	1 to 254 bytes

● Data field

Field	Output value	Remarks
Status	See 5.2.4 Status.	
Data	Data to be read	See Note below.

Note: If the status of a response message from RFID is not normal (error or busy), data will be omitted.

5.2.5.2 WRITE

■ Purpose

Writes a data to RFID from the host.

WRITE command must be issued after the RF communication stop setting by WREG command. Then, release the RF communication stop setting by WREG command after receiving the Response of the WRITE command.

An example of processing flow by software is described in 8.4 Restriction on I2C communication.

■ Command message

● Format

Command code	Start address	Data length n	Data
1 byte	2 bytes	1 byte	1 to 251 bytes

● Data field

Field	Setting	Remarks
Command code	0x18	
Start address	Address at which to start writes	・Byte units ・Big endian format
Data length n	Size of data to be written ・ Setting range: 0x01(1) to 0xFB(251)	Byte units
Data	Data to be written	

■ Response message

● Format

Status
1 byte

● Data field

Field	Output value	Remarks
Status	See 5.2.4 Status.	

5.2.5.3 RREG

■ Purpose

Reads an RFID control data and interrupt source from the host.

■ Command message

● Format

Command code
1 byte

● Data field

Field	Setting	Remarks
Command code	0x68	

■ Response message

● Format

Status	Data
1 byte	1 byte

● Data field

Field	Output value		Remarks
Status	See 5.2.4 Status.		
Data	Bit 7	Masks RF writing interrupt	Set by the WREG command
	Bit 6	Masks RF reading interrupt	Set by the WREG command.
	Bit 5	Masks RF transmission interrupt.	Set by the WREG command.
	Bit 4	Masks magnetic-field detect interrupt	Set by the WREG command.
	Bit 3	Stops RF communication.	Set by the WREG command.
	Bit 2	Reserved (Fixed at 0)	
	Bit 1	CFEN error 0: None 1:CFEN error	Reads the CFEN check results for values of the system area. For CFEN check, see the Administrator's Manual.
	Bit 0	BCC error 0: None 1: BCC error	Reads the BCC check results for values of the system area. For BCC check, see the Administrator's Manual.

5.2.5.4 WREG

■ Purpose

Writes a control data to RFID from the host.

■ Command message

● Format

Command code	Data
1 byte	1 byte

● Data field

Field	Setting		Remarks
Command code	0x78		
Data	Bit 7	Masks RF writing interrupt. 0: Disable (default) 1: Enable	Setting to 1 masks FeRAM writing interrupt, regardless of the system area HW2 parameter's IRQSEL setting.
	Bit 6	Masks RF reading interrupt. 0: Disable (default) 1: Enable	Setting to 1 masks FeRAM reading interrupt, regardless of the system area HW2 parameter's IRQSEL setting.
	Bit 5	Masks RF transmission completion interrupt. 0: Disable (default) 1: Enable	Setting to 1 masks RF transmission interrupt, regardless of the system area HW2 parameter's IRQSEL setting.
	Bit 4	Masks magnetic-field detect interrupt. 0: Disable (default) 1: Enable	Setting to 1 masks magnetic-field detect interrupt, regardless of the system area HW2 parameter's IRQSEL setting.
	Bit 3	Stops RF communication. 0: Disable (default) 1: Enable	Setting to 1 disables RF communication temporarily. When it is reset to 0, set to1 the Requests a reset (Bit0) at the same time.
	Bit 2-1	Reserved (Set to 0.)	
	Bit 0	Requests a reset. 0: Normal operation (default) 1: Enable	Self-reset the LSI after sending a response to WREG command. During the self-reset period, to initialize the LSI by FeRAM settings. For this reason, it is necessary to 3ms(min) latency before performing the host access. By the host access during self-reset period, it becomes busy response.

■ Response message

● Format

Status
1 byte

● Data field

Field	Output value	Remarks
Status	See 5.2.4 Status.	

5.2.5.5 STATUS

■ Purpose

Reads RFID status information from the host.

■ Command message

The STATUS command has no command message.

A slave transmission request serves as a STATUS command.

■ Response message

● Format

Status
1 byte

● Data field

Field	Output value	Remarks
Status	See 5.2.4 Status.	

5.2.6 Time Chart

In a serial communication by I2C interface, the commands and responses can be divided by a byte unit.

The case of commands and responses no divided is referred Normal Access, and the case of divided is referred Divided Access.

Subsequent sections describe the time chart of Normal Access and Divided Access

5.2.6.1 Time Chart of Normal Access

Figure 5-3 shows the time chart of Normal Access by I2C interface.

t0: The host inputs a request of slave reception.

It means inputting start condition and then inputs a slave address and R/W bit (L). The RFID returns an ACK if the slave address is identified. Subsequently, if the host inputs a command data, the RFID returns an ACK in byte units. The host inputs a stop condition last. Pull up the NIRQ pin to high.

t1: The host stops the clock input to the SCK pin after inputting command data.

The RFID executes command processing internally.

t2: Once the internal command processing is completed, the RFID outputs low to the NIRQ pin to send a response.

t3: The host detects the low output of the NIRQ pin and inputs a request of slave transmission.

The request of slave transmission means inputting start condition, and then inputs a slave address and R/W bit (H).

The RFID returns an ACK and stops the low output of the NIRQ pin if the slave address is identified. Subsequently, if the host inputs a clock to the SCK pin, the RFID returns an ACK in byte units. The top of data is status showing the result of operation. The host inputs an ACK in byte units, and inputs an NACK and stop condition last.

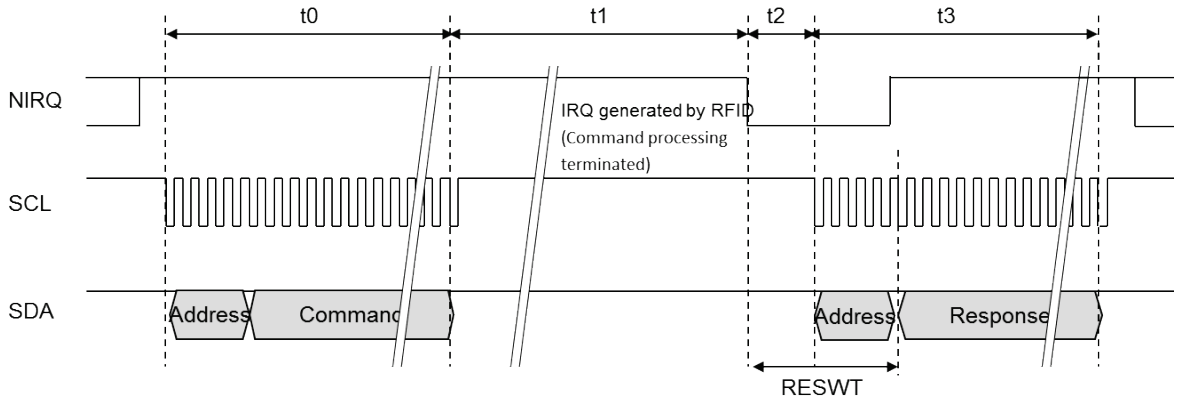

Figure 5-3 Time Chart of Normal Access

5.2.6.2 Time Chart of Divided Command Access

Figure 5-4 shows the time chart of Divided Access of command.

It shows an example of the case that command data is divided into 2.

t0: The host inputs a request of slave reception.

The RFID returns an ACK if the slave address is identified. Subsequently, the host inputs a command data, the RFID returns an ACK in byte units. The host inputs a stop condition to the last of divided byte.

t1: Waiting time for the host start inputting the remaining command data.

t2: The host inputs a request of slave reception again.

The input of a slave reception request must be completed in the time set by RESWT in system area.

The RFID returns an ACK if the slave address is identified. Subsequently, the host inputs a command data, the RFID returns an ACK in byte units. The host inputs a stop condition to the last of command data.

t3 to t5: The same as t1 to t3 of the Normal Access.

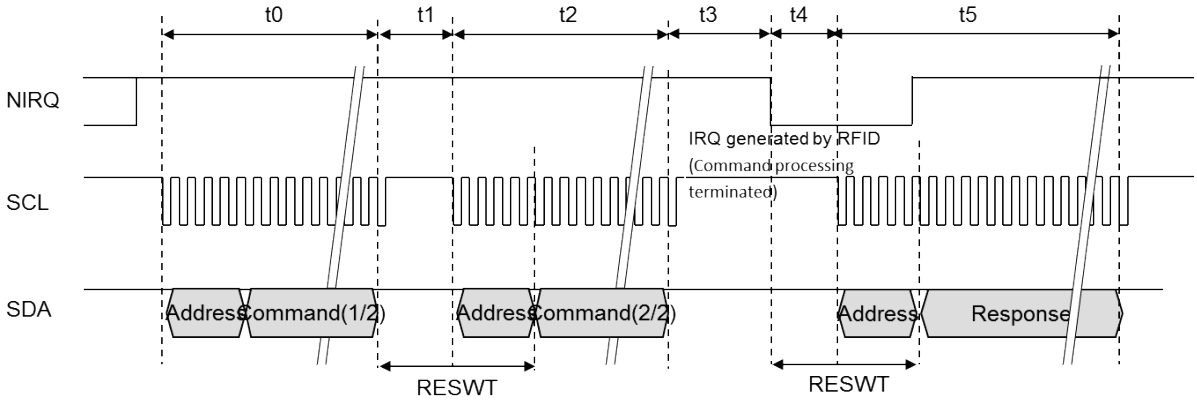

Figure 5-4 Time Chart of Divided Command Access

5.2.6.3 Time Chart of Divided Response Access

Figure 5-5 shows the time chart of Divided Access of response.

It shows an example of the case that response data to read command is divided into 2.

t0 to t2: The same as t0 to t2 of the Normal Access.

t3: The host detects the low output of the NIRQ pin and inputs a request of slave transmission.

The input of a slave transmission request must be completed in the time set by RESWT in system area.

The RFID returns an ACK and stops the low output of the NIRQ pin if the slave address is identified. Subsequently, if the host inputs a clock to the SCK pin, the RFID returns an ACK in byte units. The host inputs an ACK in byte units, and inputs an NACK and stop condition last. The top of data is status showing the result of operation. Following to status, the read data would be read out

t4: Waiting time for the host start reading the remaining response data.

The host stops a clock to the SCK pin

t5: The host inputs a request of slave transmission again.

The input of a slave transmission request must be completed in the time set by RESWT in system area.

The RFID returns an ACK if the slave address is identified.

Subsequently, if the host inputs a clock to the SCK pin, the RFID returns data in byte units. The host inputs an ACK in byte units, and inputs an NACK and stop condition last.

The top of divided response data is status, “0xXB”(self-diagnosis error) would be returned. Following to status, the remaining read data would be read out

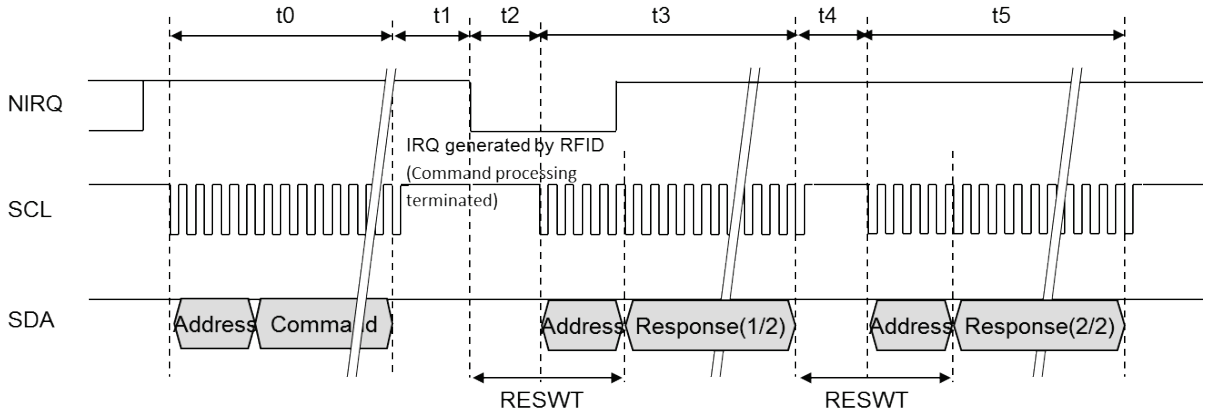

Figure 5-5 Time Chart of Divided Response Access

Note: The maximum number of divisions is 2 in the data field of the status of non-response message.
In the example, the case of a read response, the status is 1 byte, the read data is max 254 bytes, but it is up to 2 divided.

5.2.6.4 The time constraint by INTWT setting

Figure 5-6 shows the time constraints by INTWT setting by the I2C communication.
INTWT settings are applied to the SCL negative edge interval of slave address after recognition.

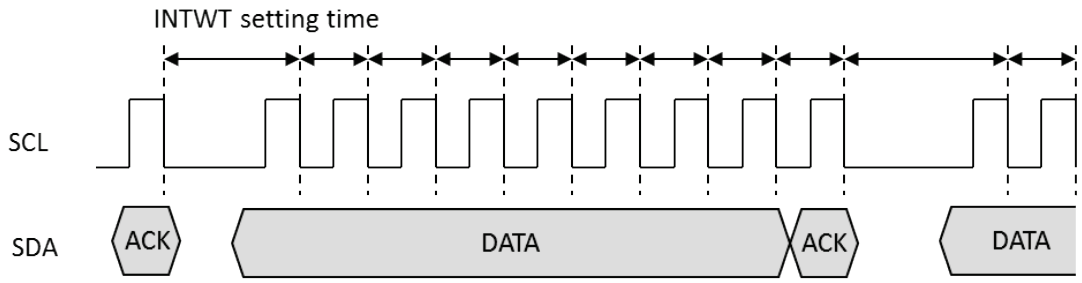

Figure 5-6 Time constraints by INTWT setting

Chapter 6 Interrupt Generation Function

6

6.1 Interrupt Source

This RFID provides an NIRQ pin for interrupt output. A low output to the pin enables IRQ notification to notify the host of generation of an interrupt.

Table 6-1 shows interrupt sources

Table 6-1 Interrupt source list

Interrupt source	Source selection	Mask advisability
Serial mode communication	-	disable
Tunnel mode detection	- (depends on RF command)	disable
RF writing	Enable (IRQSEL parameter)	Enable (WREG command)
RF reading	Enable (IRQSEL parameter)	Enable (WREG command)
RF transmission complete	Enable (IRQSEL parameter)	Enable (WREG command)
Magnetic-field detection	Enable (IRQSEL parameter)	Enable (WREG command)

Interrupt sources are described below.

・Serial communication interrupt

An IRQ that is caused by serial communication.

IRQ would be issued when processing of the command input from the host is completed.

Serial communication interrupt cannot be masked.

・Tunnel mode detect interrupt

An IRQ that is caused by tunnel mode command from the reader/writer.

Refer to Chapter 7 Tunnel Mode for tunnel mode commands.

Tunnel mode detect interrupt cannot be masked.

・RF writing interrupt

An IRQ that is caused by RF communication and issued either when starts the FeRAM writing by RF command.

The system area HW2 parameter's IRQSEL selects whether interrupt is generated and the interrupt source. Bit 3 selects the interrupt source.

In addition, even when interrupt generation is enabled, the WREG command for serial command can mask the IRQ.

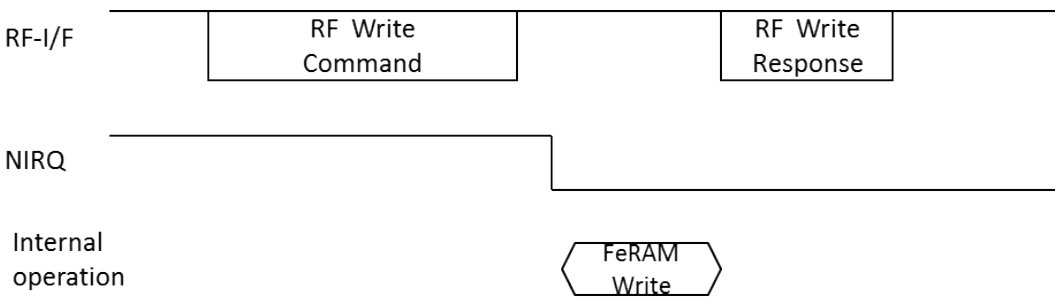

Figure 6-1 RF writing interrupt

Note: This interrupt is not intended to notify the completion of the write to the FeRAM.
Correct data or written, to be confirmed such as by setting a flag data.

・RF reading interrupt

An IRQ that is caused by RF communication and issued either when RF response transmission is completed after a reading out to FeRAM area set by system parameter IRQBS and IRQBE.

The system area HW2 parameter's IRQSEL selects whether interrupt is generated and the interrupt source. Bit 2 selects the interrupt source.

In addition, even when interrupt generation is enabled, the WREG command for serial command can mask the IRQ.

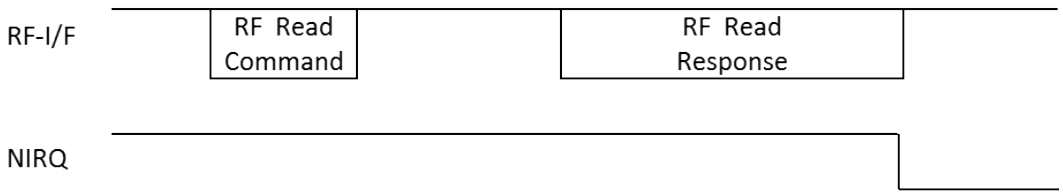

Figure 6-2 RF reading interrupt

・RF transmission complete interrupt

An IRQ that is caused by RF communication and issued either when RF response transmission is completed.

The system area HW2 parameter's IRQSEL selects whether interrupt is generated and the interrupt source. Bit 1 selects the interrupt source.

In addition, even when interrupt generation is enabled, the WREG command for serial command can mask the IRQ.

Figure 6-3 RF transmission complete interrupt

・Magnetic-field detect interrupt

An IRQ that is caused by RF magnetic-field detection and issued when an RF magnetic field by reader/writer is detected.

Bit 0 of the system area HW2 parameter's IRQSEL selects whether interrupt is generated.

In addition, even when interrupt generation is enabled, the WREG command for serial command can mask the IRQ.

While the contact power supply VDDEX is applied, even if RF magnetic field disappears, the Low output of the NIRQ pin by the IRQ notification is continued.

While the contact power supply VDDEX is not applied, an IRQ is issued by starting a power supply due to RF magnetic field. However, when RF magnetic field disappears, power supply will be stopped and low output of the NIRQ pin will be stopped.

In the any IRQ notification, it is released when the slave address is matched by the slave transmission request from the Host, and low output of NIRQ pin is negated.

Chapter 7 Tunnel Mode

7

7.1 Tunnel Mode Sequence

This section describes the sequence of tunnel mode, which is shown in Figure 7-1.

SNo.1: Reader/writer sends a tunnel mode command to RFID.

SNo.2: RFID receives the tunnel mode command and issues an interrupt request (IRQ) to the host.

SNo.3: If VDDEX is not applied, the host applies VDDEX.

SNo.4: The host sends a QUERY command (inquiry) to RFID.

SNo.5: RFID sends a response to the QUERY command to the host. The response includes data of the tunnel mode command in step SNo.1.

SNo.6: The host sends an ANSWER command (notification of the result) to RFID. The command includes data to be sent to reader/writer.

SNo.7: RFID receives the ANSWER command and sends a response (processing result; Normal end or Error) to the command to the host.

SNo.8: After sending the response to the ANSWER command in step SNo.7, RFID sends the data of the ANSWER command to reader/writer as a response to the tunnel mode command.

For more information about tunnel mode operation, see Section 8.2 State Transition Diagram in Operation Mode, Section 8.3 Flow Chart in Tunnel Mode, or other related sections.

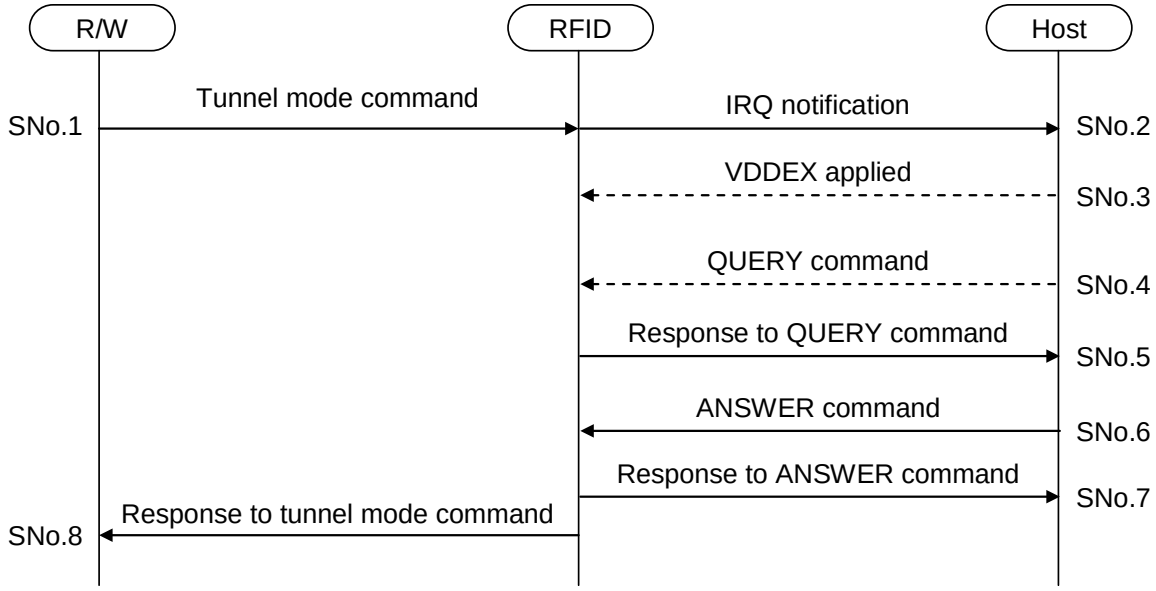

Figure 7-1 Tunnel Mode Sequence

7.2 Communication between Reader/Writer and RFID

This section describes the communication between Reader/Writer and RFID in tunnel mode, based on JISX6319-4 and ISO/IEC14443.

7.2.1 Using JISX6319-4

READ and WRITE commands, same as those of RF communication mode, are used.

Use the given bits of block number to set the tunnel mode commands. For more information, see Section 4.2.5.6 Section Block.

For information on how to set block list and block data, see Section 4.2.5.7 Block List.

7.2.2 Using ISO/IEC14443

READ and WRITE commands, same as those of RF communication mode, are used.

Use the given bits of address (P1, P2) to set the tunnel mode commands. For more information, see Section 4.3.8.5 Address.

For information on how to set data, see Section 4.3.8.6 Data.

7.3 Communication between Host and RFID

This section describes the I2C communication between the host and RFID in tunnel mode.

7.3.1 Communication Specification

The specification for I2C communication is the same as that for serial communication mode. There are restrictions in the I2C divided access. See Section 5.2 I2C.

QUERY and ANSWER commands are provided only for tunnel mode. For more information about commands, see Section 7.4 Command.

7.3.2 IRQ Notification

Once this RFID receives a tunnel mode command from reader/writer, it sends an IRQ to the host.

IRQ is output from the NIRQ pin. The NIRQ pin also outputs IRQs in other modes than tunnel mode by setting the system area HW2 parameter's IRQSEL. For more information about IRQSEL, see Section 3.3 HW1 (2 bytes) in Section System Area.

When the host receives an IRQ and detects that the supply voltage VDDEX is not applied, it applies VDDEX and sends a QUERY command to the RFID. The RFID can receive I2C commands at the falling edge of NIRQ.

In addition, if the RFID does not receive a QUERY command from the host even when the maximum wait time for QUERY command specified in the system area QWT elapses after the NIRQ pin outputs low, it detects a timeout. For more information, see Section 8.3 Flow Chart in Tunnel Mode.

For more information, see 7.3.4 Timeout.

7.3.3 Response to QUERY Command

When a response to QUERY command in tunnel mode is sent, the RFID reports the content of the command from reader/writer to the host.

The address setting for response to QUERY is shown in Figure 7-2.

Bit 7 of upper byte is fixed to 0 and bit 6 is fixed to 1. Setting bit 6 to 1 indicates the RFID is in tunnel mode. Bits 5 and 4 indicate mode.

Table 7-1 shows the meaning of mode of upper byte bits 5 and 4.

Start address (2 bytes)

Upper byte — Lower byte

msb — lsb msb — lsb

	Bit 7	Bit 6	Bit 5	Bit 4	Bit 3	Bit 2	Bit 1	Bit 0	Bit 7	Bit 6	Bit 5	Bit 4	Bit 3	Bit 2	Bit 1	Bit 0
Output	0	1	Mode		Start address designation											

Figure 7-2 Address Setting for Response to QUERY Command

Table 7-1 QUERY Response Mode

Upper byte		Meaning
bit 5	bit 4	
0	0	The read value is "00"
1	0	Reserved
1	1	
0	1	

7.3.4 Timeout

In tunnel mode command processing for communication between host and RFID, a timeout processing is applied if the host sends no response to QUERY and ANSWER commands.

Figure 7-3 shows the wait time for commands in tunnel mode.

Subsequent section describes the wait time for QUERY and ANSWER commands.

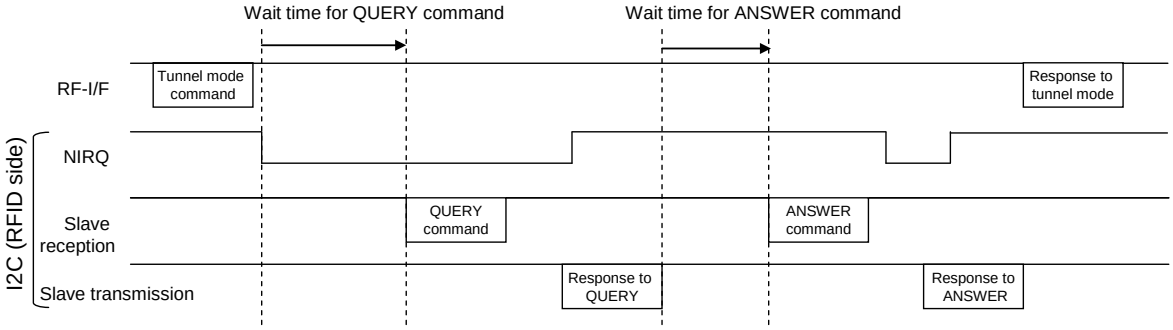

Figure 7-3 Wait Time for Commands

Note: In timeout measurement processing for I2C, the start of command is detected at the start of ACK transmission to a slave address input, not start condition.

7.3.4.1 Wait Time for QUERY Command

The time sequence for timeout of waiting for QUERY command (no response from the host) is shown in Figure 7-4 . The measurement of timeout starts when the IRQ state of NIRQ pin changes to low from high.

A timeout time is QWT setting time.

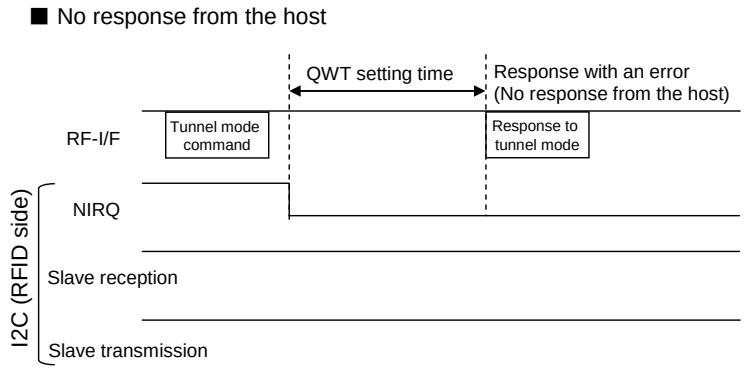

Figure 7-4 Timeout of Waiting for QUERY Command (No Response from the Host)

Next, the time sequence when the RFID receives a command other than QUERY from the host while it waits for a QUERY command is shown in Figure 7-5 .Note that the timeout measurement time does not include the time from serial communication command issue to the response to the command.

For more information, see Section 8.3 Flow Chart in Tunnel Mode.

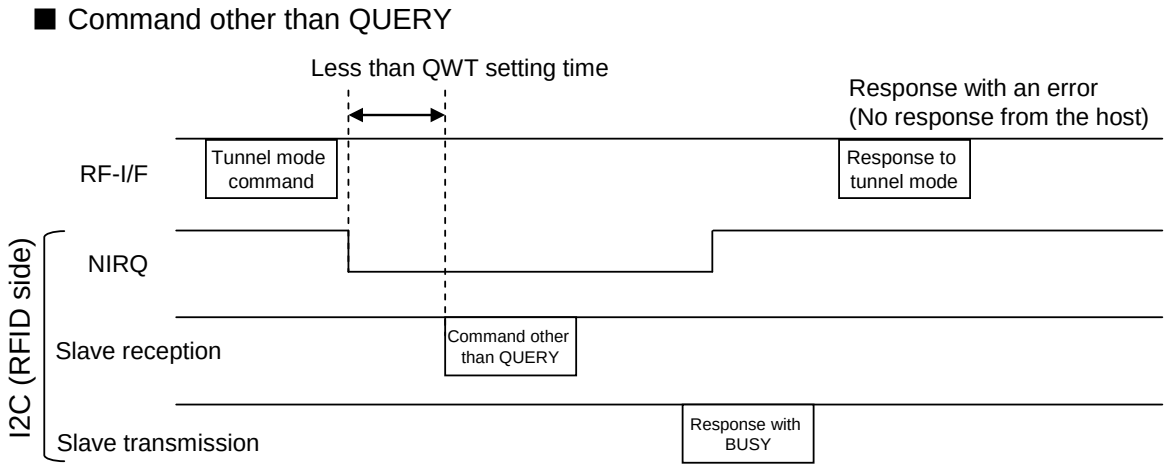

Figure 7-5 Timeout of Waiting for QUERY Command (Command Other Than QUERY)

7.3.4.2 Wait Time for ANSWER Command

The time sequence when the RFID receives no response from the host while it waits for an ANSWER command is shown in Figure 7-6 . The measurement of timeout starts immediately after the first response (to normal QUERY command) is sent.

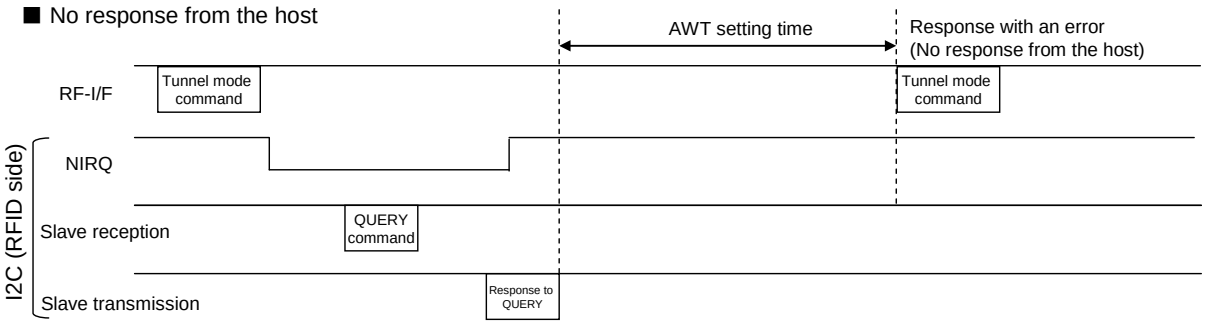

Figure 7-6 Timeout of Waiting for ANSWER Command (No Response from the Host)

Next, the time sequence when the RFID receives a command other than ANSWER from the host while it waits for an ANSWER command is shown in Figure 7-7 . Note that the timeout measurement time does not include the time from serial communication command issue to the response to the command.

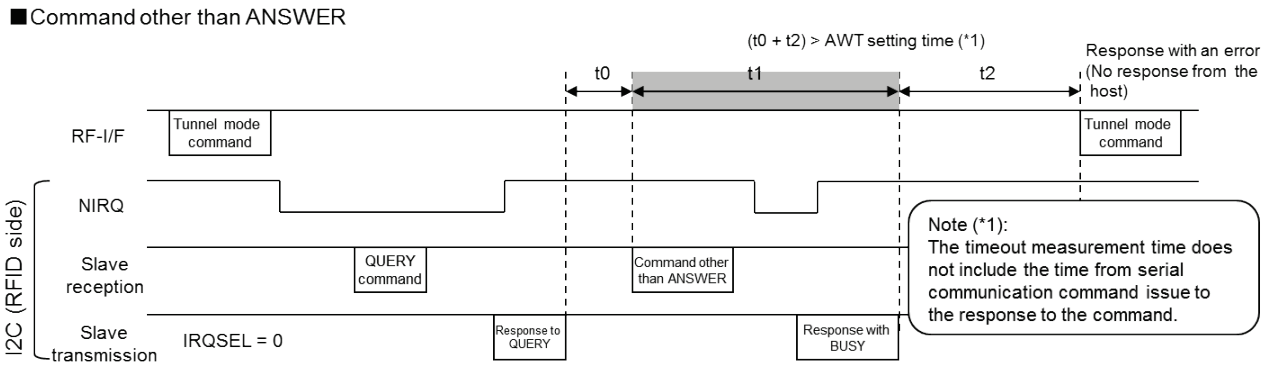

Figure 7-7 Timeout of Waiting for ANSWER Command (Command Other Than ANSWER)

7.4 Command

The tunnel mode commands supported by this RFID fall into two types:

RF-interface-side commands between reader/writer and RFID and serial-interface-side commands between the host and RFID.

These commands are shown in Table 7-2 and Table 7-3.

Subsequent sections describe each command in detail.

Table 7-2 RF Interface Command List in Tunnel Mode

Name	Code		Description
	JISX6319-4	ISO/IEC 14443	
READ	0x06	0xB0	Reads data of the host from reader/writer. (Command code is the same as that for RF communication mode)
WRITE	0x08	0xD6	Writes data to the host from reader/writer. (Command code is the same as that for RF communication mode)

Table 7-3 Serial-Communication-Side Commands List in Tunnel Mode

Name	Code	Description
QUERY	0x28	The host inquires about the content of tunnel mode command to RFID.
ANSWER (normal end)	0xF8	The host reports the processing result (normal end) of tunnel mode command to RFID.
ANSWER (error)	0xE8	The host reports the processing result (error) of tunnel mode command to RFID.

7.4.1 Read in Tunnel Mode

■ Purpose

Reads data of the host from reader/writer via RFID.

7.4.1.1 Read Command in Tunnel Mode (Reader/Writer to RFID)

■ JIX6319-4

● Format

Command code	PICC identifier	No. of service file identifiers (k)	List of service file identifiers	No. of blocks (m)	Block list
1 byte	8 bytes	1 byte	2×k byte	1 byte	2×m or 3×m bytes

● Data field

Field	Setting	Remarks
Command code	0x06	
PICC identifier	PICC identifier acquired by REQ command described in Section 4.2.6.1 REQ.	
No. of service file identifiers (k)	Number of service files Setting range: 0x01(1) to 0x0F(15)	When the range other than the range on the left column is set, the RFID responds with an error.
List of service file identifiers	Don't care (Setting example: 0x0900)	When specifying multiple services, the RFID responds with an error if all service files are not set to the same value.
No. of blocks (m)	Number of blocks specified in block list Setting range: ・Plaintext communication in RF communication mode: 0x01(1) to 0x0F(15) ・Other communication: 0x01(1) to 0x0F(15)	When the range other than the range on the left column is set, the RFID responds with an error.
Block list	Block list of data to be read For information about how to set, see the following: ・See 4.2.5.6 Block. ・See 4.2.5.7 Block List.	

■ ISO/IEC14443 TypeA/TypeB

● Format

CLA	INS	P1	P2	Le
1 byte	1 byte	1 byte	1 byte	1 byte

- Data field

Field	Setting	Remarks
CLA	0x00	Responds with an error, except 0x00.
INS	0xB0	
P1	Start address of data to be read ・See 4.3.8.5 Address.	
P2	Start address of data to be read ・See 4.3.8.5 Address.	
Le	Byte length of data to be read ・Setting range: 0x01(1) to 0xFB(251)	

7.4.1.2 QUERY Command (Host to RFID)

- Format

Command code
1 byte

- Data field

Field	Setting	Remarks
Command code	0x28	

7.4.1.3 QUERY Response (RFID to Host)

- Format

Response code	Start address	Data length n
1 byte	2 bytes	1 byte

- Data field

Field	Setting	Remarks
Response code	See 5.2.4 Status.	
Start address	Address at which to start reads	・Byte units ・Big endian format
Data length n	Size of data to be read	Byte units

7.4.1.4 ANSWER Command (Host to RFID)

- Format

Command code	Data
1 byte	n bytes

- Data field

Field	Output value	Remarks
Command code	0xF8: Normal end 0xE8: Error	
Data	Data of the range specified by the response to the QUERY command	See Note below.

Note: If the status of the ANSWER command is "error," omit the data.

7.4.1.5 ANSWER Response (RFID to Host)

- Format

Status
1 byte

- Data field

Field	Output value	Remarks
Status	See 5.2.4 Status.	

7.4.1.6 Read Response in Tunnel Mode (RFID to Reader/Writer)

1.

■ JIX6319-4

- Format

Response code	PICC identifier	Status flag 1	Status flag 2	No. of blocks (m)	Block data
1 byte	8 bytes	1 byte	1 byte	1 byte	16×m bytes

- Data field

Field	Output value	Remarks
Response code	0x07	
PICC identifier	See 4.2.5.2 PICC (Proximity IC Card) Identifier.	
Status flag 1	See 4.2.5.8 Status Flag.	
Status flag 2	See 4.2.5.8 Status Flag.	
No. of blocks (m)	Number of blocks specified by the tunnel mode read command	Omitted when the status is not "Normal end"
Block data	Data specified by the ANSWER command ・See 4.2.5.7 Block List.	Omitted when the status is not "Normal end"

■ ISO/IEC14443 TypeA/TypeB

■ Format

Data	SW1	SW2
1 to 251 bytes	1 byte	1 byte

■ Data field

Field	Output value	Remarks
Data	Read data See 4.3.8.6 Data.	Omitted when the status word is not "Normal end"
SW1	・See 4.3.8.7 Status Word.	
SW2	・See 4.3.8.7 Status Word.	

7.4.2 Write in Tunnel Mode

■ Purpose

Writes a data to the host from reader/writer, via RFID.

7.4.2.1 Write Command in Tunnel Mode (Reader/Writer to RFID)

■ JIX6319-4

● Format

Command code	PICC identifier	No. of service file identifiers (k)	List of service file identifier	No. of blocks (m)	Block list	Block data
1 byte	8 bytes	1 byte	2×k bytes	1 byte	2×m or 3×m bytes	16×m bytes

● Data field

Field	Setting	Remarks
Command code	0x08	
PICC identifier	PICC identifier acquired by REQ command described in Section 4.2.6.1 REQ.	
No. of service file identifiers (k)	Number of service files Setting range: 0x01(1) to 0x0B(11)	When the range other than the range on the left column is set, the RFID responds with an error.
List of service file identifier	Don't care (Setting example: 0x0900)	When specifying multiple services, the RFID responds with an error if all service files are not set to the same value.
No. of blocks (m)	Number of blocks specified by block list Setting range: ・ 1 to 8 service files: 0x01(1) to 0x0C(12) ・ 9 to 11 service files: 0x01(1) to 0x0B(11)	When the range other than the range on the left column is set, the RFID responds with an error.
Block list	Block list of data to be written For information about how to set, see the following: ・ See 4.2.5.6 Block. ・ See 4.2.5.7 Block List.	
Block data	See 4.2.5.7 Block List.	

■ ISO/IEC14443 TypeA/TypeB

■ Format

CLA	INS	P1	P2	Lc	Data
1 byte	1 byte	1 byte	1 byte	1 byte	1 to 248 bytes

■ Data field

Field	Setting	Remarks
CLA	0x00	Responds with an error, except 0x00
INS	0xD6	
P1	Start address of data to be written ・See 4.3.8.5 Address.	
P2	Start address of data to be written ・See 4.3.8.5 Address.	
Lc	Byte length of Data block Setting range: 0x01(1) to 0xF8(248) ・Set to 16×n (n: integer) for encrypted communication.	
Data	Write data ・See 4.3.8.6 Data.	

7.4.2.2 QUERY Command (Host to RFID)

● Format

Command code
1 byte

● Data field

Field	Setting	Remarks
Command code	0x28	

7.4.2.3 QUERY Response (RFID to Host)

● Format

Response code	Start address	Data length n	Data
1 byte	2 bytes	1 byte	n bytes

- Data field

Field	Setting	Remarks
Response code	See 5.2.4 Status.	
Start address	Address at which to start writes	・Byte units ・Big endian format
Data length n	Size of data to be written	Byte units
Data	Data to be written to the host	

7.4.2.4 ANSWER Command (Host to RFID)

- Format

Command code
1 byte

- Data field

Field	Output value	Remarks
Command code	0xF8: Normal end 0xE8: Error	

7.4.2.5 ANSWER Response (RFID to Host)

- Format

Status
1 byte

- Data field

Field	Output value	Remarks
Status	See 5.2.4 Status.	

7.4.2.6 Write Response in Tunnel Mode (RFID to Reader/Writer)

■ JIX6319-4

- Format

Response code	PICC identifier	Status flag 1	Status flag 2
1 byte	8 bytes	1 byte	1 byte

- Data field

Field	Output value	Remarks
Response code	0x09	
PICC identifier	See 4.2.5.2 PICC (Proximity IC Card) Identifier.	
Status flag 1	See 4.2.5.8 Status Flag.	
Status flag 2	See 4.2.5.8 Status Flag.	

■ ISO/IEC14443 TypeA/TypeB

- Format

SW1	SW2
1 byte	1 byte

- Data field

Field	Output value	Remarks
SW1	See 4.3.8.7 Status Word.	
SW2	See 4.3.8.7 Status Word.	

Chapter 8 Annex

8

8.1 Exclusive Control

While in operation mode, this RFID performs an exclusive control not to receive other commands.

Figure 8-1 shows the exclusive control period. The period is from the start of an operation mode command to the end of the response to the command. In tunnel mode, the period is from the start of the tunnel mode command from reader/writer (see SNo.1 in Figure 7-1 Tunnel Mode Sequence) to the end of the response to the command from RFID to reader/writer (see SNo.8 in Figure 7-1 Tunnel Mode Sequence).

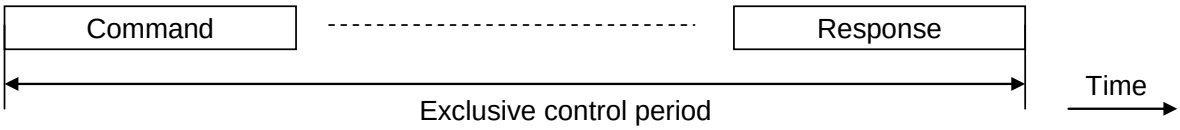

Figure 8-1 Exclusive Control Period

Table 8-1 to Table 8-4 shows the operations in exclusive control period for each operation mode.

The RFID responds to a command from the host if the slave address is identified. It also responds with unimplemented command error for unimplemented command.

In tunnel mode, the RFID operation differs between before and after IRQ output following the reception of a tunnel mode command from reader/writer.

Table 8-1 Operation during Exclusive Control (Response at HOST command recieved)

Current operation mode	Receive command	Operation to a receive command
During transmission or reception by the RF	READ (*2) WRITE (*2) STATUS	Responds with BUSY.(*4)
	WREG RREG	Normal end or Self-diagnosis error
	QUERY (*2) ANSWER (*2)	Tunnel mode error
During transmission or reception by the serial communication	READ (*2) WRITE (*2) STATUS WREG (*2) RREG (*2) QUERY (*2) ANSWER (*2)	Responds with HOST-BUSY. (*3)
Tunnel mode Waiting for QUERY command	READ (*2) WRITE (*2)	Unimplemented command error
	STATUS	Tunnel Read detect or Tunnel Write detect
	WREG (Except RF Stop request) RREG	Tunnel Read detect or Tunnel Write detect (Normal end), or Self-diagnosis error
	WREG (RF Stop request)	Normal end or Self-diagnosis error
	QUERY	See 7.1 Tunnel Mode Sequence.
	ANSWER (*2)	Unimplemented command error
Tunnel mode Waiting for Answer command	READ (*2) WRITE (*2)	Unimplemented command error
	STATUS	Tunnel Read detect or Tunnel Write detect
	WREG RREG	Normal end or Self-diagnosis error
	QUERY (*2)	Unimplemented command error
	ANSWER	See 7.1 Tunnel Mode Sequence.

(*1) During the processing of the Host command, more and Host command is input, the interrupt for after the command does not occur.

(*2) The irregular case is not assumed as the normal operation.

(*3) HOST-BUSY response is a response in the case where the slave transmission request before the interrupt occurred.

(*4) If the READ command or Write command conflicts with the RF command, the validity of the data on the I2C access side can not be guaranteed.

Please do the following so that the validity of the data on the I2C access side can be guaranteed even in the above cases.

・Before I2C access (Read / Write), stop RF communication and confirm RF communication stop

・After I2C access (Read / Write), restart RF communication and execute self reset

After self reset, insert the wait time of 3ms or longer before sending the next command.

An example of processing flow by software is described in 8.4 Restriction on I2C communication.

Table 8-2 Operation during Exclusive Control (JISX6319-4 command recieved)

Current operation mode	Receive command	Operation to a receive command
During transmission or reception by the RF	All Commands (*1)	No response
During transmission or reception by the serial communication	All Commands	No response
Tunnel mode Waiting for QUERY command	All Commands (*1)	No response
Tunnel mode Waiting for Answer command	All Commands (*1)	No response

(*1) The irregular case is not assumed as the normal operation.

Table 8-3 Operation during Exclusive Control (ISO14443 TypeA/B command received (SWTX=”0”))

Current operation mode	Receive command	Operation to a receive command
During transmission or reception by the RF	All Commands (*1)	No response
During transmission or reception by the serial communication	All Commands	No response
Tunnel mode Waiting for QUERY command	All Commands (*1)	No response
Tunnel mode Waiting for Answer command	All Commands (*1)	No response

(*1) The irregular case is not assumed as the normal operation.

Table 8-4 Operation during Exclusive Control (ISO14443 TypeA/B command received (SWTX=”1”))

Current operation mode	Receive command	Operation to a receive command
During transmission or reception by the RF	All Commands (*1)	No response
During transmission or reception by the serial communication (*2)	SELECT READ WRITE VERIFY	S(WTX) response
	Other	Response
Tunnel mode Waiting for QUERY command	All Commands (*1)	No response
Tunnel mode Waiting for Answer command	All Commands (*1)	No response

(*1) The irregular case is not assumed as the normal operation.

(*2) When the RF communication stop setting, the operation to a receive command is no response.

Figure 8-2 shows the detail of exclusive control in tunnel mode.

When the RFID receives a command from the host during tunnel mode command reception and before IRQ output, it sends a response to the Host command and then outputs Tunnel mode detect IRQ.

See “During transmission or reception by the RF “ Table 8-2 for “Response *1” in Fig 8-2

After tunnel mode detect IRQ output, if a command is received from the Host, and the response to the command.

See “Tunnel mode Waiting for QUERY command “ Table 8-3 for “Response *2” in Fig 8-2

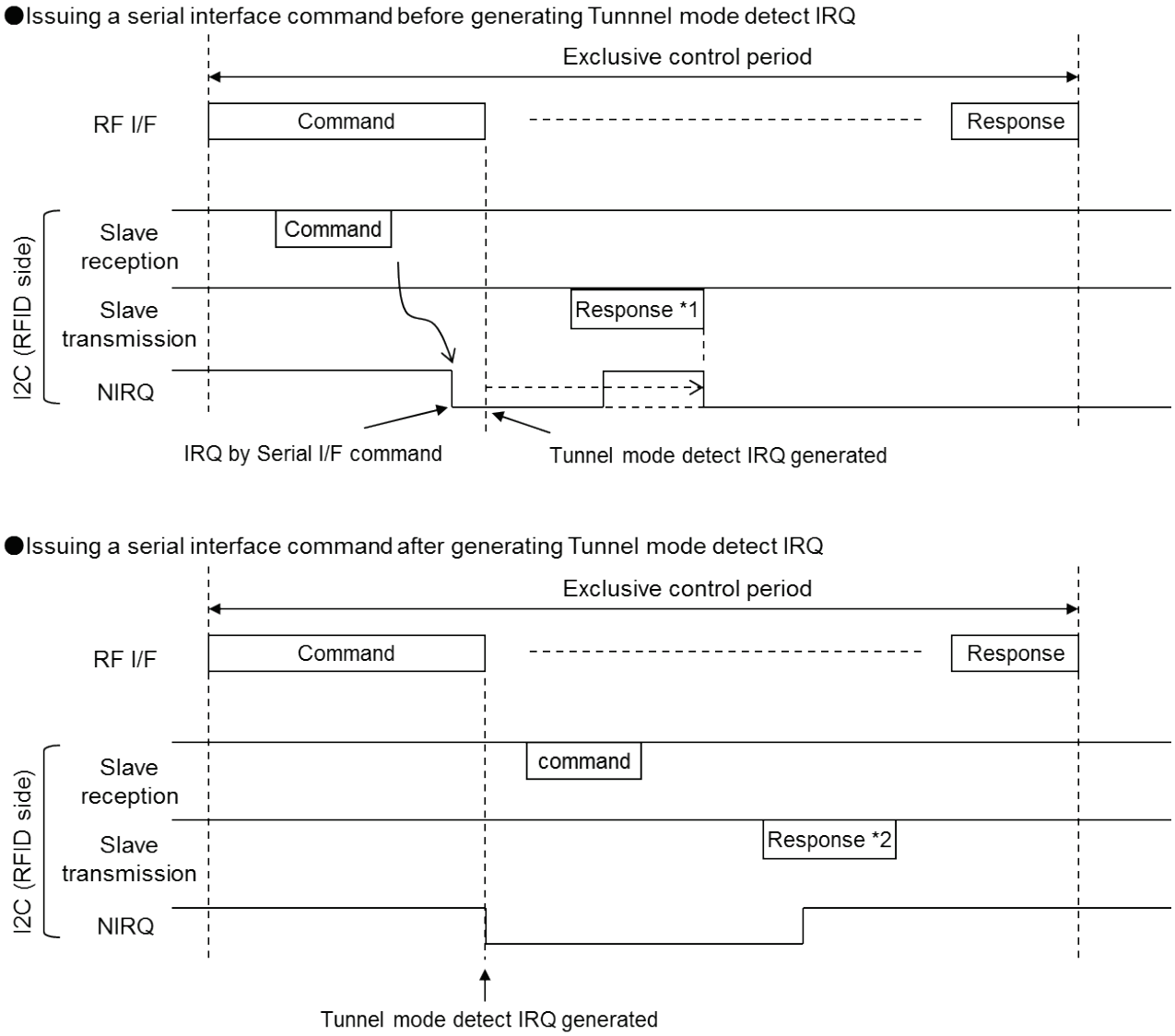

Figure 8-2 Exclusive Control in Tunnel Mode

8.2 State Transition Diagram in Operation Mode

Figure 8-3 shows the state transition diagram of this RFID in operation mode.

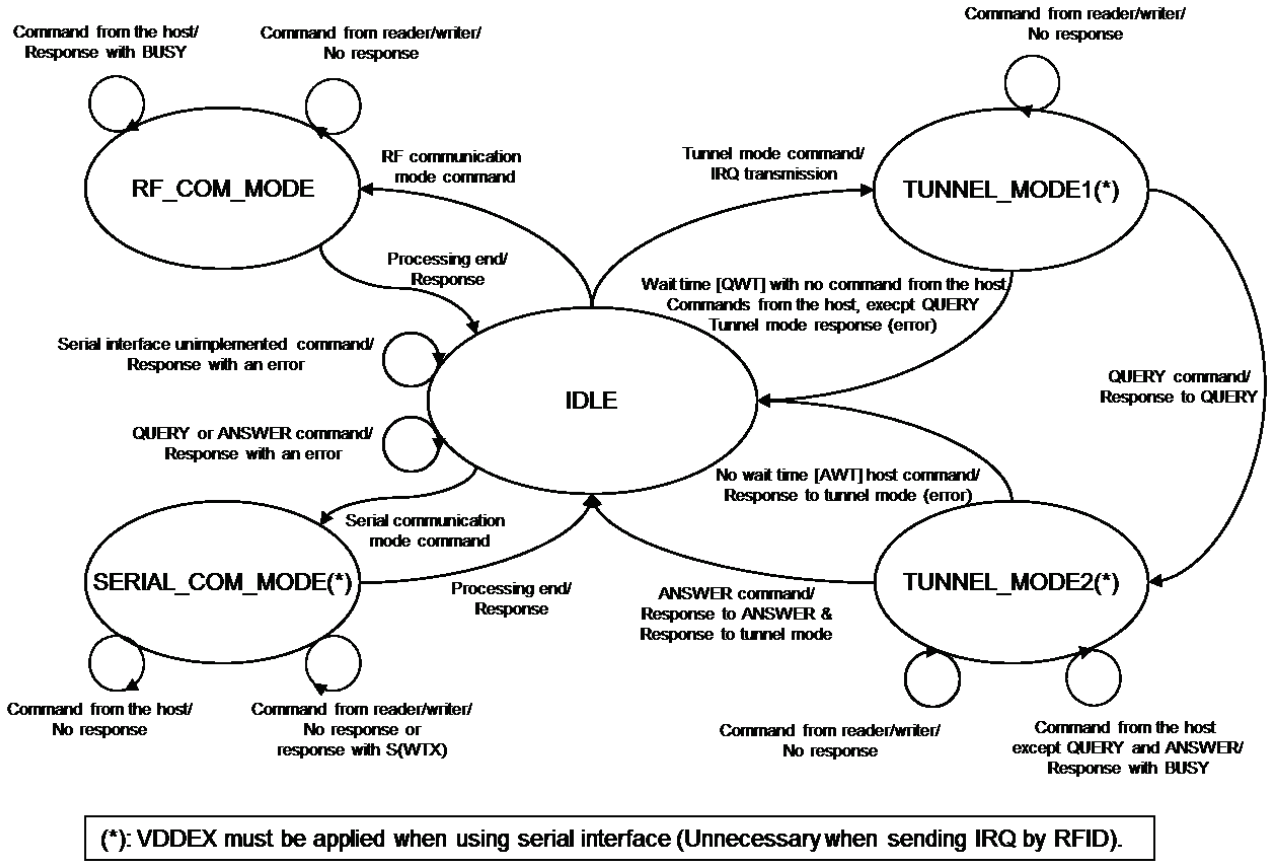

Figure 8-3 State Transition Diagram in Operation Mode

8.3 Flow Chart in Tunnel Mode

Figure 8-4 illustrates a flow chart for tunnel mode.

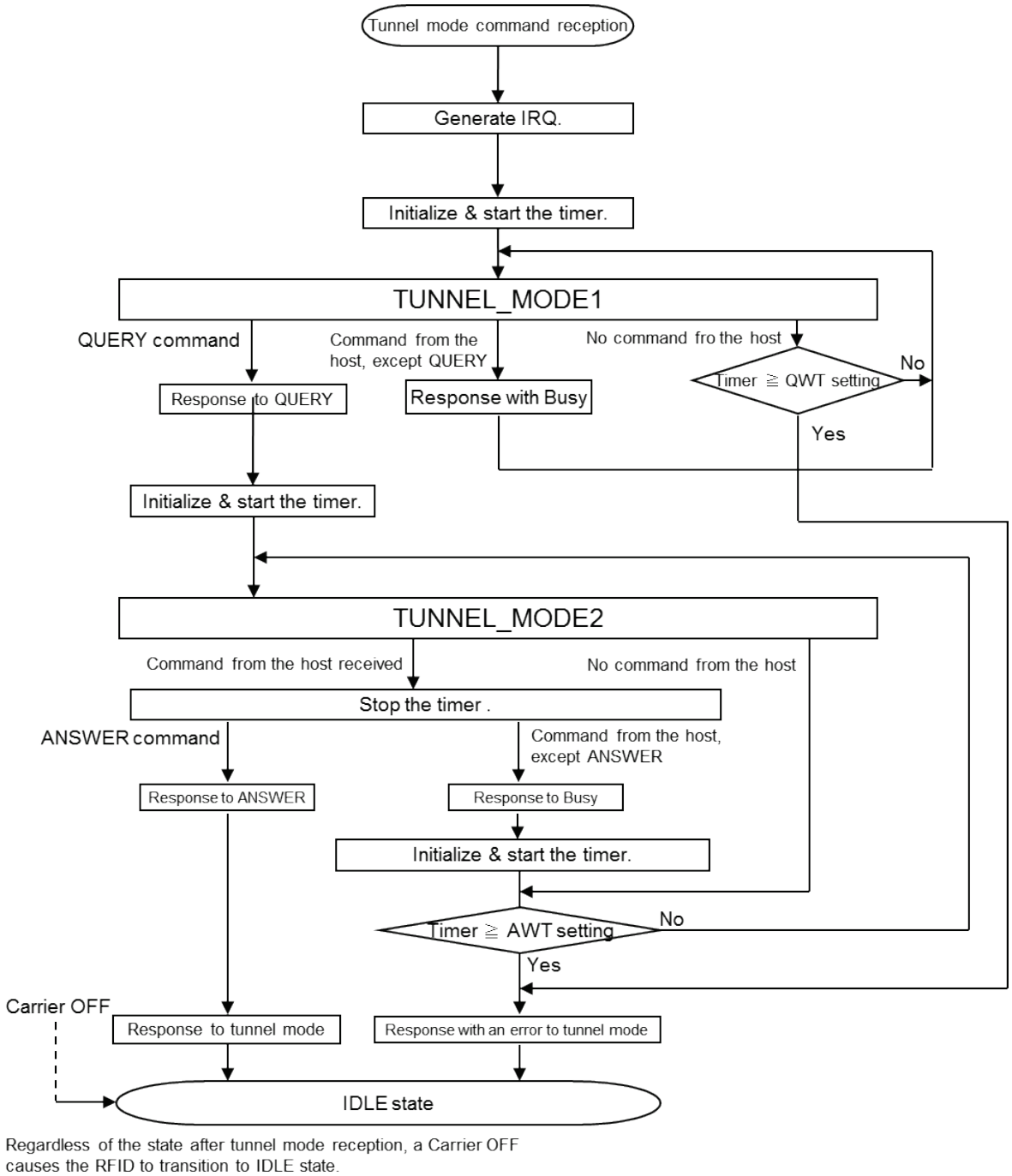

Figure 8-4 Flow Chart in Tunnel Mode

In TUNNEL_MODE2, Timer will initialize when Busy response by commands from the Host of non-ANSWER. No time-out is generated when repeating a Busy response more frequently than AWT settings, it is not a transition to the IDLE state. Transitions to the IDLE state by receiving the ANSWER command.

8.4 Restriction on I2C communication

If the READ command or Write command from the host microcomputer conflicts with the RF command, the validity of the data on the I2C access side can not be guaranteed.

Please do the following so that the validity of the data on the I2C access side can be guaranteed even in the above cases.

・Before I2C access (Read / Write), stop RF communication and confirm RF communication stop

・After I2C access (Read / Write), restart RF communication and execute self reset

After self reset, insert the wait time of 3ms or longer before sending the next command.

Process flow by software

RF communication stop	← Add WREG command (bit3 = 1) *
Acquire response of WREG command	← Confirm normal completion of WREG command *
Read Status	← Confirm that RFID response status is not busy *
Read or Write command in I2C communication	← Access according to the requirement of set equipment
RF communication restart and self reset execution	← Add WREG command (bit 3 = 0, bit 0 = 1) *
Acquire response of WREG command	← Confirm normal completion of WREG, accessible after initialization time of 3 ms *

* : Control to be added

Chapter 9 Electrical characteristics

9

Electrical characteristics

PART No. : MN63Y1214	
PACKAGE CODE No.	HSON008-A-0202

v1.03

	Electrical characteristics		

Attention

The technical information described in this document is intended only to show the main characteristics and application circuit examples of the product. No license is granted in and to any intellectual property right or other right owned by Panasonic Corporation or any other company. Therefore, no responsibility is assumed by our company as to the infringement upon any such right owned by any other company which may arise as a result of the use of technical information described in this document.

Use caution regarding the orientation of the LSI during use. Mounting of the LSI in an incorrect orientation may cause smoke or fire.

	Electrical characteristics		

Structure	CMOS Type LSI with 8Kbit FeRAM
Application	Digital AV devices, Home Appliances, Portable devices, etc.
Function	Dual interface RFID
Connection	Fig.2-1,Fig.2-2 and Fig.2-3

A. Absolute Maximum Ratings Note 1)

V_{SS} = 0 V

Item		Symbol	Rating	Unit
A1	Power supply Note 2)	V_{DDEX}	- 0.3 ～ + 4.6	V
A2		V_{DDA}	- 0.3 ～ + 4.6	V
A3	Voltage antenna terminals swing (VB Peak to peak) Note3)	V_{AB}	26	V
A4	Input pin voltage (SDA,SCL,NIRQ)	V_I	- 0.3 ～ + 4.6	V
A5	Output current	I_O	12	mA
A6	Storage temperature Note 4)	T_{stg}	-40 ～ 85	°C
A7	Operating ambient temperature	T_{opr}	-20 ～ 85	°C

Note 1) Absolute Maximum Ratings are limit values not to destroy the chip and are not to guarantee operation.

Note 2) VDDA is generated internally and are not supplied externally.

Note 3) Definition of Voltage antenna terminals swing (V_{AB})
Frequency of VA and VB terminal is 13.56MHz. Please do not applied to the DC component.

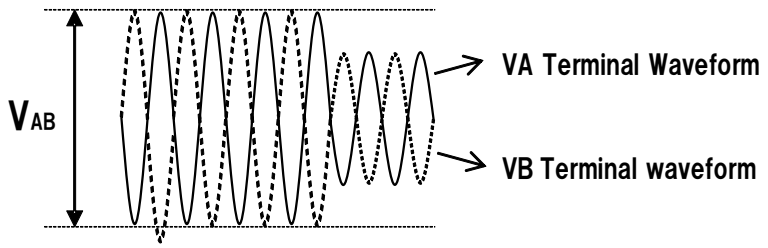

Fig.1

Note 4) When removing the LSI from the board while its built-in FeRAM retains data, do it at as low a temperature and for as short a time as possible.
However, for the removed LSI, FeRAM data retention is not guaranteed.

	Electrical characteristics		

Notation for usage

Connect the smooth capacitor between VDDA - VSS and VDDEX -VSS terminal.
Smooth capacitor must be connected as close as possible to each VDDA, VDDEX terminal.
The accuracy of the capacitor including capacitance change with temperature must be within ±25%.

	Electrical characteristics		

B. Operating Conditions

Ta = -20 °C ～ 85 °C, V_{SS} = 0 V

Item		Symbol	Conditions	Limits			Unit
				Min	Typ	Max	
B1	Supply voltage VDDEX	V_{DDEX}		1.7	1.8	3.6	V
B2	VDDA Voltage	V_{VDDA}	VA,VB Frequency 13.56MHz VA,VB Voltage 3V	1.9	2.4	3.0	V

	Electrical characteristics		

C. Electric Characteristics

DC Characteristics Ta = -20 °C ～ 85 °C, V_{SS} = 0 V

Item		Symbol	Conditions	Limits			Unit
				Min	Typ	Max	
C1	Operating current on VDDEX	I_{DDEX}	V_{DDEX} =1.8V	-	250	500	μA

	Electrical characteristics		

I/O terminal characteristics Ta = -20 °C～85 °C, V_{DDEX}=1.7V～3.6V, V_{SS} = 0 V

Item		Symbol	Condition	Limits			Unit
				Min	Typ	Max	
Input/Output pin : SDA、SCL							
C2	Input voltage high level	V_{IH1}		0.7×V_{DDEX}	-	V_{DDEX}	V
C3	Input voltage low level	V_{IL1}		0	-	0.3×V_{DDEX}	V
C4	Input leakage current	I_{LK1}		−10	0.02	10	μA
C5	Output voltage low level (SDA)	I_{LK1}	I_{OL}=2.0 mA	-	-	0.4	V
Output pin : NIRQ							
C6	Output leakage current	I_{LK2}		−10	0.02	10	μA
C7	Output voltage low level	V_{OL2}	I_{OL}=2.0 mA	-	-	0.4	V

Reference information

As a reference of pull-up resistor connected to the open-drain type terminals, SDA, SCL and NIRQ, 3.3kΩ resistors are used in our evaluation. Please adjust the resistance value considering the communication speed, capacitive loads and other factors.

	Electrical characteristics		

Input capacitance V_{SS} = 0 V

Item		Symbol	Condition	Limits			Unit
				Min	Typ	Max	
C8	Capacitance between antenna terminals (VA-VB)	C_I	Ta=25 °C 13.56 MHz, amplitude 1V(RMS)	3	5	7	pF

Load switch Ta = -20 °C ～ 85 °C, V_{SS} = 0 V

Item		Symbol	Condition	Limits			Unit
				Min	Typ	Max	
C9	Load switch resistance(VA-VB)	R_{LD}	HWCF parameter : Reserved0[1:0] = 0b10 VA=0V, VB=1.2V	150	270	400	Ω

	Electrical characteristics		

D. AC characteristics

I2C interface Ta = -20 °C ～ 85 °C, V_{DDEX}=1.7V～3.6V,V_{SS} = 0 V

Item		Symbol	Limits			Unit
			Min	Typ	Max	
D1	SCL clock frequency	F_{SCL}	1		400	kHz
D2	Hold time of Repeated-START condition	$T_{HD;STA}$	0.6			μs
D3	SCL clock low period	T_{LOW}	1.3			μs
D4	SCL clock high period	T_{HIGH}	0.6			μs
D5	Setup time of Repeated-START condition	$T_{SU;STA}$	0.6			μs
D6	SDA hold time	$T_{HD;DAT}$	0.0		0.9	μs
D7	SDA setup time	$T_{SU;DAT}$	100			ns
D8	Setup time of STOP condition	$T_{SU;STO}$	0.6			μs
D9	Period between STOP condition and START condition	T_{BUF}	1.3			μs

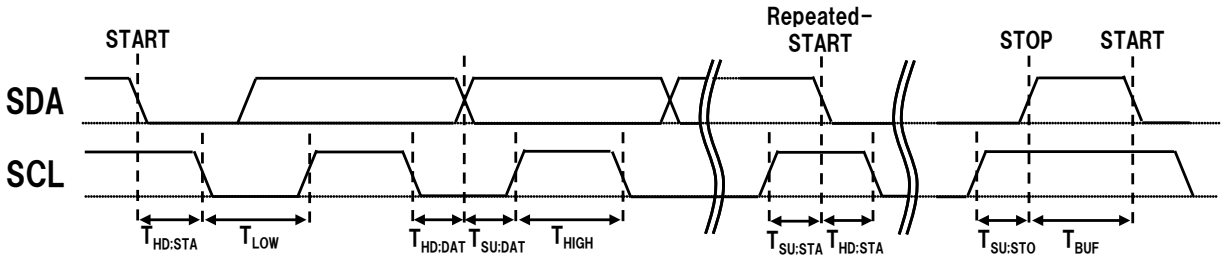

Fig.2

	Electrical characteristics		

RF interface Ta = -20 °C ～ 85 °C, V_{SS} = 0 V

Item		Symbol	Condition	Limits			Unit
				Min	Typ	Max	
D10	VB voltage (peak to peak) at “RF High” period	V_{RFH1}	RF 13.56 MHz	-	-	18	V
D11	Modulation index of command	m	JISX6319-4 RF interface specification Communication rate of 212kbps	4.0	-	-	%

Note 5) This specification is applied both when receiving command and when transmitting response.

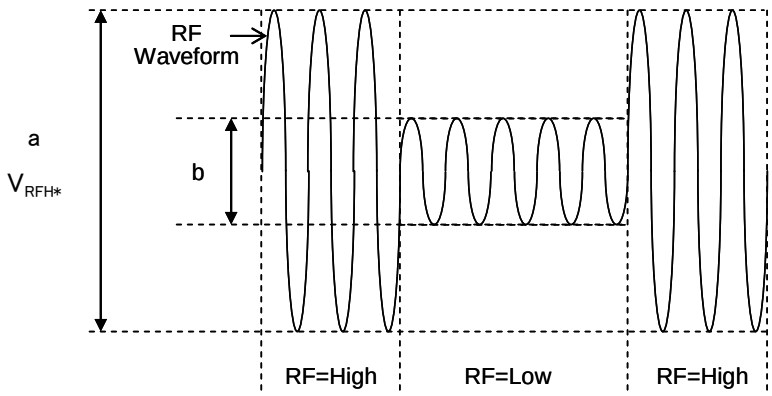

Modulation Factor $m = \frac{a-b}{a+b}$

The RF waveform is measured with a calibration coil specified in ISO/IEC 10373-6.

Fig.3

	Electrical characteristics		

E. Boot of power supply

Ta = -20 °C ～ 85 °C, V_{DDEX}=1.7V～3.6V,V_{SS} = 0 V

Item		Symbol	Condition	Limits			Unit
				Min	Typ	Max	
E1	VDDEX rise time	t_{UP}	Note 7)	0.0025	-	1.0	V/μs
E2	VDDEX boot time to be ready to receive command	t_{BOOT}	Note 7)	-	-	3	ms
E3	VDDEX low pulse period	t_{PLW}	Note 7)	3	-	-	ms

Note 6) VDDEX-VSS smooth capacitor is 0.1 μF.
Note 7) Make it into a monotone increase or monotone decreasing at the time of ON/OFF of a VDDEX power supply.
When it turn OFF a VDD power supply, make VDDEX less than 0.3V.
Note 8) Host access enable after T_{BOOT} time passed on Power up. Host access is finished before Power down.
Note 9) If VDDEX rise time is below the limit value, to the reset request by WREG command after T_{BOOT} time passed on Power up.

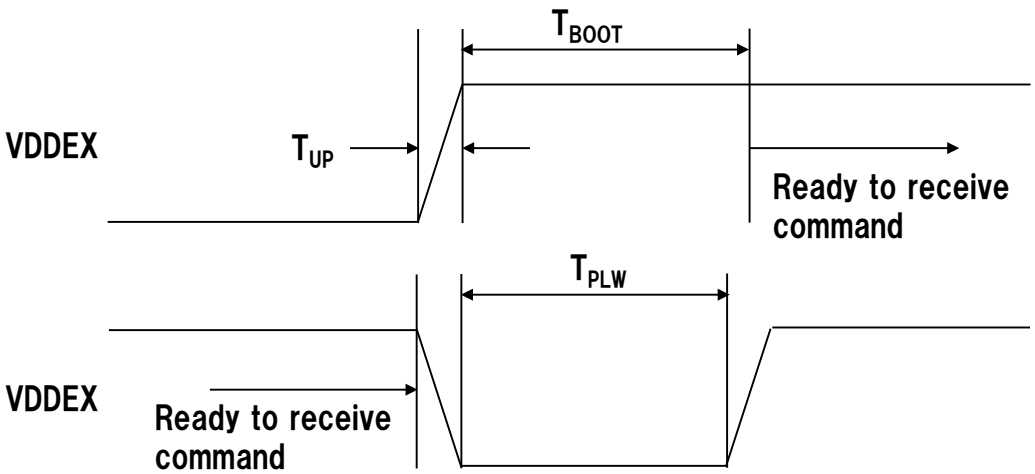

Fig.4

Revision History

Revision History of MN63Y1214 user's manual is shown below

Revised on Sep10, 2014

Purpose	Version 1.0			Version x.x		
	Page	Section	Comments	Page	Section	Comments
			Provisional version	-		-

Revised on Oct 9, 2014

Purpose	Version 1.0			Version 1.01		
	Page	Section	Comments	Page	Section	Comments
Modify	76	--	4.3.9.5 RATS(ISO/IEC14443-3 …	P76	--	4.3.9.5 RATS(ISO/IEC14443-4 …

Revised on Nov 14, 2014

Purpose	Version 1.01			Version 1.02		
	Page	Section	Comments	Page	Section	Comments
Modify	P15	1.4	Fig1-3	P15	1.4	Fig1-3 modify
Delete	P20	2.2	(VDDEX) Additionaly, the RFID has….	-	-	-
Add	P28	3.3.1	■HW1(2bytes)	P28	3.3.1	■HW1(2bytes) ～RFTYPE, see Table 3-12.
Modify	P29	3.3.1 Table 3-11	RFSPD Bit 3 : 0 (Default)	P29	3.3.1 Table 3-11	RFSPD Bit 3 : 1 (Default)
Add	P29	3.3.1 Table 3-11	-	P29	3.3.1 Table 3-11	Add Note
Delete	P31	-	■INTWT、■RESWT When this field is set to….	P31	-	■INTWT、■RESWT
Modify	P34	--	■HWCF Set reserved bits to 0.	P34	--	■HWCF Set reserved bits to 0x02.
Delete	P34	Table 3-25 Table 3-26	Table 3-25 Reserved0 Table 3-26 Reserved1	-	-	-
Modify	P35	Table 3-25	Apply after turning power ON from OFF, following rewrites or full-reset.	P35	Table 3-25	After rewrites, Apply after turning power ON from OFF or self-reset.

Purpose	Version 1.01			Version 1.02		
	Page	Section	Comments	Page	Section	Comments
Delete	P52	4.2.6.3 WRITE	●Data field Note)The VERIFY command	P52	4.2.6.3 WRITE	●Data field
Modify	P61	Table 4-16	RFID Rule 11 re-send the last I-block.	P61	Table 4-16	RFID Rule 11 re-send the last frame.
Modify	P65	4.3.8.2	approximately 4949 ms	P65	4.3.8.2	approximately 4.949 s
Modify	P67	4.3.8.5	This RFID uses address to specify encrypted communication ～	P67	4.3.8.5	This RFID uses address to specify communication in ～
Add	P83	4.3.10 NDEF	-	P83	4.3.10 NDEF	This RFID supports the NDEF format of Type4 Tag of Version 2.0.
Modify	P104	5.2.4 Table 5-4	0x7 BUSY RFID command processing in progress	P104	5.2.4 Table 5-4	0x7 BUSY RFID command processing in progress (read, write, status command only)
Add	-	-	-	P105	Table 5-5	Command response of RFID command processing in progress
Modify	P105	Table 5-5	RREG 0x68 Reads an RFID control data and interrupt source from the host.	P106	Table 5-6	RREG 0x68 Reads an RFID control data from the host.
Modify	P107	5.2.5.3 RREG	●Data field (Bit3) This bit is valid when magnetic-field detect ～	P108	5.2.5.3 RREG	●Data field (Bit3) Set by the WREG command.
Add	P108	5.2.5.4 WREG	-	P109	5.2.5.4 WREG	●Data field (Bit3) ～ When it is reset to 0, set to1 the Requests a reset (Bit0) at the same time.
Modify	P125	7.3.4.1	The time sequence (QRTRY = 1) for ～	P125	7.3.4.1	The time sequence for ～
Modify	P126	7.3.4.2 Fig7-7	NIRQ timing chart	P126	7.3.4.2 Fig7-7	NIRQ timing chart
Modify	P138	8.1	Table 8-1	P139 P140	8.1	Table 8-1, 8-2, 8-3, 8-4
Modify	P139	8.1 Fig8-2	-	P141	8.1 Fig8-2	Fixed the description and timing chart

Revised on Dec 18, 2014

Purpose	Version 1.02			Version 1.1		
	Page	Section	Comments	Page	Section	Comments
Modify	P40	Fig4-3	--	P40	Fig4-3	“POWER OFF” state modify

Purpose	Version 1.02			Version 1.1		
	Page	Section	Comments	Page	Section	Comments
Modify	P63	Fig4-21	--	P63	Fig4-21	“POWER OFF” state modify
Modify	P88	Fig4-30	--	P87	Fig4-30	“POWER OFF” state modify
Add	P109	5.2.5.4 WREG	--	P107	5.2.5.4 WREG	●Data field bit0 comment During the self-reset period, ～
Add	P143	8.3	--	P141	8.3	In TUNNEL_MODE2, Timer will initialize ～
Add	--	--	--	P143	-	Chapter 9 Electrical characteristics

Revised on Dec 22, 2014

Purpose	Version 1.1			Version 1.11		
	Page	Section	Comments	Page	Section	Comments
Modify	P95	4.4.9.2 ATTRIB	「Param3 Remarks」	P95	4.4.9.2 ATTRIB	・no response generated expect when bits 7-4 are set to 0000b and bit 0 is set to 1b. ・bits 3-1 ignored

Revised on Sep 23, 2016

Purpose	Version 1.11			Version 1.13		
	Page	Section	Comments	Page	Section	Comments
Add				P20	2.2	Host interface I2C (SDA, SCL) However, the pins can be left open if I2C is not used.
Modify	P69	Table 4 22	HLTA Code 0x50	P69	Table 4 22	HLTA Code 0x5000
Modify	P72	4.3.9.3 Format	UID 4 bytes	P72	4.3.9.3 Format	UID 5 bytes
Add				P105	5.2.5.1 READ	Note: READ command must be issued～
Add				P105	5.2.5.2 WRITE	Note: WRITE command must be issued～
Add				P137	Table 8-1	During transmission or reception by the RF READ, WRITE
Add				P138	Table 8-4	Note: (*2) When the RF～

Revised on Nov 9, 2016

Purpose	Version 1.13			Version 1.14		
	Page	Section	Comments	Page	Section	Comments
Modify	P19	2.1 Fig2-2	Thickness of 0.45mm	P19	2.1 Fig2-2	Thickness of 0.50mm

Revised on May 12, 2017

Purpose	Version 1.14			Version 1.15		
	Page	Section	Comments	Page	Section	Comments
Modify	P105	Note:	Note: READ command must be issued～	P104	5.2.5.1 READ	Described in the text
Add				P104	5.2.5.1 READ	An example of processing～
Modify	P105	Note:	Note:WRITE command must be issued～	P105	5.2.5.2 WRITE	Described in the text
Add				P105	5.2.5.2 WRITE	An example of processing～
Add				P137	Table 8-1	(*4) If the READ command～
Add				P142	8.4	Restriction on I2C communication

Request for your special attention and precautions in using the technical information and semiconductors described in this book

(1) If any of the products or technical information described in this book is to be exported or provided to non-residents, the laws and regulations of the exporting country, especially, those with regard to security export control, must be observed.

(2) The technical information described in this book is intended only to show the main characteristics and application circuit examples of the products. No license is granted in and to any intellectual property right or other right owned by Panasonic Corporation or any other company. Therefore, no responsibility is assumed by our company as to the infringement upon any such right owned by any other company which may arise as a result of the use of technical information de-scribed in this book.

(3) The products described in this book are intended to be used for general applications (such as office equipment, communications equipment, measuring instruments and household appliances), or for specific applications as expressly stated in this book.
Please consult with our sales staff in advance for information on the following applications, moreover please exchange documents separately on terms of use etc.: Special applications (such as for in-vehicle equipment, airplanes, aerospace, automotive equipment, traffic signaling equipment, combustion equipment, medical equipment and safety devices) in which exceptional quality and reliability are required, or if the failure or malfunction of the products may directly jeopardize life or harm the human body.
Unless exchanging documents on terms of use etc. in advance, it is to be understood that our company shall not be held responsible for any damage incurred as a result of or in connection with your using the products described in this book for any special application.

(4) The products and product specifications described in this book are subject to change without notice for modification and/or improvement. At the final stage of your design, purchasing, or use of the products, therefore, ask for the most up-to-date Product Standards in advance to make sure that the latest specifications satisfy your requirements.

(5) When designing your equipment, comply with the range of absolute maximum rating and the guaranteed operating conditions (operating power supply voltage and operating environment etc.). Especially, please be careful not to exceed the range of absolute maximum rating on the transient state, such as power-on, power-off and mode-switching. Otherwise, we will not be liable for any defect which may arise later in your equipment.
Even when the products are used within the guaranteed values, take into the consideration of incidence of break down and failure mode, possible to occur to semiconductor products. Measures on the systems such as redundant design, arresting the spread of fire or preventing glitch are recommended in order to prevent physical injury, fire, social damages, for example, by using the products.

(6) Comply with the instructions for use in order to prevent breakdown and characteristics change due to external factors (ESD, EOS, thermal stress and mechanical stress) at the time of handling, mounting or at customer's process. We do not guarantee quality for disassembled products or the product re-mounted after removing from the mounting board.
When using products for which damp-proof packing is required, satisfy the conditions, such as shelf life and the elapsed time since first opening the packages.

(7) When reselling products described in this book to other companies without our permission and receiving any claim of request from the resale destination, please understand that customers will bear the burden.

(8) This book may be not reprinted or reproduced whether wholly or partially, without the prior written permission of our company.

No.010618

Mouser Electronics

Authorized Distributor

Click to View Pricing, Inventory, Delivery & Lifecycle Information:

Panasonic:

MN63Y1214-E1