Kinetis KM34 Sub-Family Data Sheet

MKM34Z256VLL7
MKM34Z256VLQ7

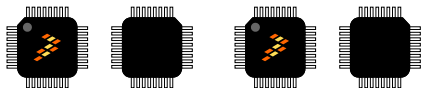

100 LQFP
14 mm × 14 mm Pitch
0.5 mm

144 LQFP
20 mm × 20 mm Pitch
0.5 mm

Enabling high accuracy, secure 1-, 2- & 3-phase electricity metering solutions through a powerful analog front end (AFE), auto-compensated iRTC with hardware tamper detection, segment LCD controller, rich security protection and multiple low power features in a 32-bit ARM® Cortex®-M0+ MCU. This product offers:

- Enabling single-chip 1-, 2- & 3-phase metering designs
  - AFE, Security & HMI. Single crystal implementation
  - Single point of calibration during manufacture
- Highest accuracy metrology with regional feature support
  - Multiple ΣΔ ADCs with PGA
  - Supports neutral disconnect use case
- Compliance with WELMEC/OIML recommendations
  - Memory & peripheral protection
  - Hardware tamper detect with time stamping
  - Low-power RTC, battery backup with tamper memory

Core

- ARM® Cortex®-M0+ core up to 75 MHz
- Metering specific Memory Mapped Arithmetic Unit (MMAU)

Clocks

- 75 MHz high-accuracy internal reference clock
- 32 kHz, and 4 MHz internal reference clock
- 1 kHz LPO clock
- 32.768 kHz crystal oscillator in iRTC power domain
- 1 MHz to 32 MHz crystal oscillator
- FLL and PLL

System peripherals

- Memory Protection Unit (MPU)
- 4-channel DMA controller
- Watchdog and EWM
- Low-leakage Wakeup Unit (LLWU)
- SWD debug interface and Micro Trace Buffer (MTB)
- Bit Manipulation Engine (BME)
- Inter-peripheral Crossbar Switch (XBAR)

Analog Modules

- 4 AFE channels (4× 24-bit ΣΔ ADCs with PGA)
- 16-channel 16-bit SAR ADC with 4 result registers
- High-speed analog comparator containing a 6-bit DAC and programmable reference input
- Internal 1.2 V reference voltage 10–15 ppm/°C

Memories

- 256 KB program flash memory
- 32 KB SRAM

Operating Characteristics

- Voltage range: 1.71 to 3.6 V (without AFE)
- Voltage range: 2.7 to 3.6 V (with AFE)
- Temperature range (ambient): –40 to 105 °C

Low power features

- 13 power modes to provide power optimization based on application requirements
- 7.69 mA @ 75 MHz run current
- Less than 171 µA/MHz very low power run current
- 6.05 µA very low power stop current
- Down to 220 nA deep sleep current
- V_{BAT} domain current < 1 µA with iRTC operational
- Low-power boot with less than 2.33 mA peak current

Communication interfaces

- 16-bit SPI modules
- Low-power UART module
- UART module complying with ISO7816-3
- Basic UART module
- I^2C with SMBus

© 2014–2015 Freescale Semiconductor, Inc. All rights reserved.

Timers

- Quad Timer (QTMR)
- Periodic Interrupt Timer (PIT)
- Low Power Timer (LPTMR)
- Programmable Delay Block (PDB)
- Independent Real Time Clock (iRTC)

Human-machine interface

- Up to 4×60 (8×56, 6×58) segment LCD controller operating in all low-power modes
- General purpose input/output (GPIO)

Security and integrity modules

- Memory Mapped Cryptographic Acceleration Unit (MMCAU) for AES encryption
- Random Number Generator (RNGA), complying with NIST: SP800-90
- Programmable Cyclic Redundancy Check (PCRC)
- 80-bit unique identification number per chip

The following figure shows the functional modules in the chip.

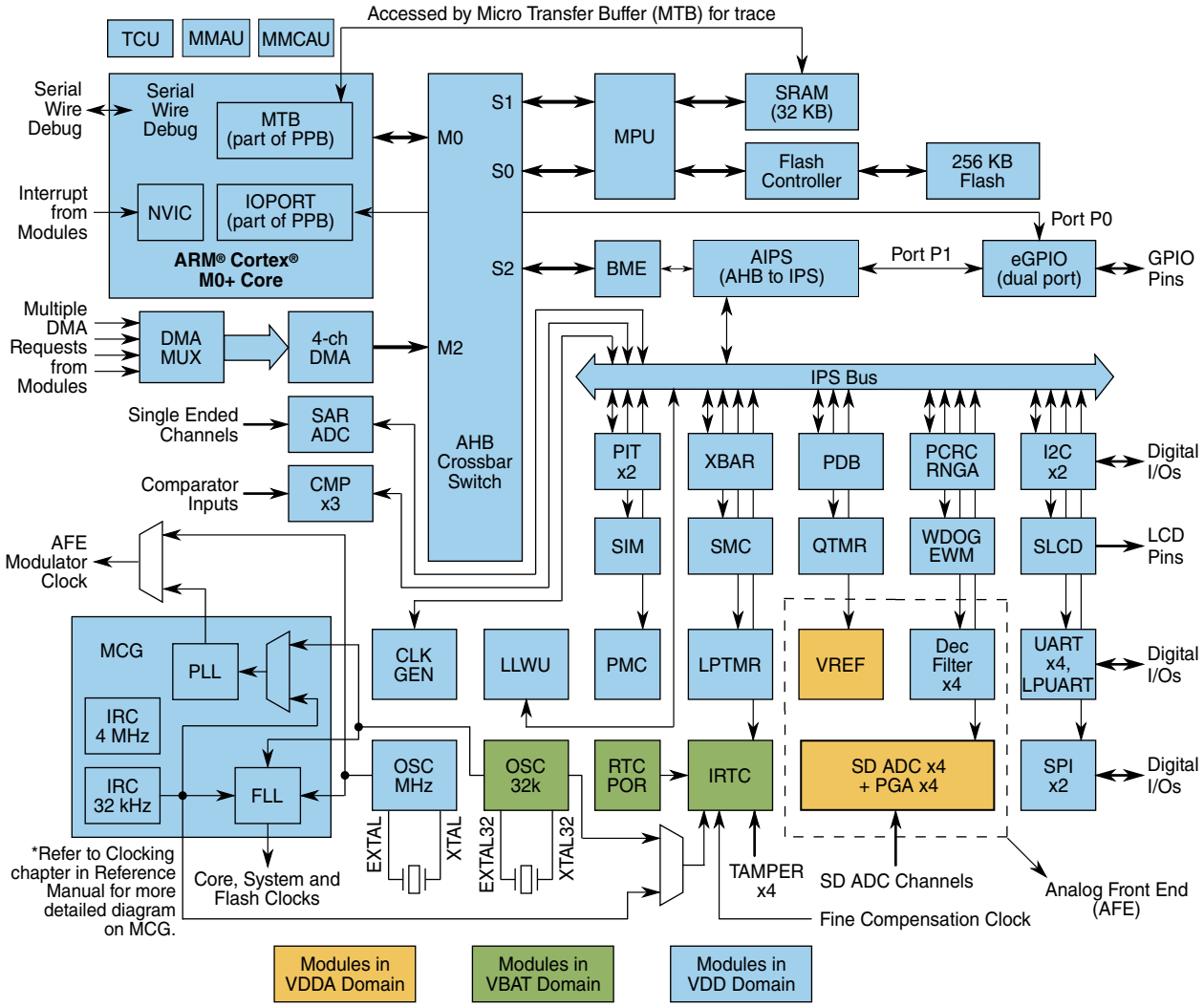

Figure 1. Functional block diagram

Ordering Information

Part Number [1]	Memory		ADC Channels	Maximum number of GPIOs
	Flash (KB)	SRAM (KB)		
MKM34Z256VLL7	256	32	12	72
MKM34Z256VLQ7	256	32	16	99

1. To confirm current availability of orderable part numbers, go to http://www.freescale.com and perform a part number search.

Related Resources

Type	Description	Resource
Selector Guide	The Freescale Solution Advisor is a web-based tool that features interactive application wizards and a dynamic product selector.	Solution Advisor
Product Brief	The Product Brief contains concise overview/summary information to enable quick evaluation of a device for design suitability.	KM3xPB [1]
Reference Manual	The Reference Manual contains a comprehensive description of the structure and function (operation) of a device.	KM34P144M75SF0RM [1]
Data Sheet	The Data Sheet includes electrical characteristics and signal connections.	This document: KM34P144M75SF0
Chip Errata	The chip mask set Errata provides additional or corrective information for a particular device mask set.	KINETIS_M_0N32P [1]
Package Drawing	Package dimensions are provided in package drawings.	100-LQFP: 98ASS23308W [1] 144-LQFP: 98ASS23177W [1]

1. To find the associated resource, go to http://www.freescale.com and perform a search using this term.

Table of Contents

1 Ratings....5
1.1 Thermal handling ratings....5
1.2 Moisture handling ratings....5
1.3 ESD handling ratings....5
1.4 Voltage and current operating ratings....6
2 General....6
2.1 AC electrical characteristics....6
2.2 Nonswitching electrical specifications....6
2.2.1 Voltage and current operating requirements....6
2.2.2 LVD and POR operating requirements....7
2.2.3 Voltage and current operating behaviors....8
2.2.4 Power mode transition operating behaviors....9
2.2.5 Power consumption operating behaviors....10
2.2.6 EMC radiated emissions operating behaviors....12
2.2.7 Designing with radiated emissions in mind....12
2.2.8 Capacitance attributes....13
2.3 Switching specifications....13
2.3.1 Device clock specifications....13
2.3.2 General switching specifications....13
2.4 Thermal specifications....14
2.4.1 Thermal operating requirements....14
2.4.2 Thermal attributes....14
3 Peripheral operating requirements and behaviors....15
3.1 Core modules....15
3.1.1 Single Wire Debug (SWD)....16
3.1.2 Analog Front End (AFE)....16
3.2 Clock modules....17
3.2.1 MCG specifications....17
3.2.2 Oscillator electrical specifications....19
3.2.3 32 kHz oscillator electrical characteristics....22
3.3 Memories and memory interfaces....24
3.3.1 Flash electrical specifications....24
3.4 Analog....25
3.4.1 ADC electrical specifications....25
3.4.2 CMP and 6-bit DAC electrical specifications....29
3.4.3 Voltage reference electrical specifications....31
3.4.4 AFE electrical specifications....32
3.5 Timers....36
3.6 Communication interfaces....36
3.6.1 I2C switching specifications....36
3.6.2 UART switching specifications....37
3.6.3 SPI switching specifications....37
3.7 Human-Machine Interfaces (HMI)....41
3.7.1 LCD electrical characteristics....41
4 Dimensions....43
4.1 Obtaining package dimensions....43
5 Pinout....43
5.1 KM3x_256 Signal multiplexing and pin assignments....43
5.2 KM3x_256 Family Pinouts....48
6 Ordering parts....50
6.1 Determining valid orderable parts....50
7 Part identification....51
7.1 Description....51
7.2 Format....51
7.3 Fields....51
7.4 Example....52
8 Terminology and guidelines....52
8.1 Definition: Operating requirement....52
8.2 Definition: Operating behavior....52
8.3 Definition: Attribute....53
8.4 Definition: Rating....53
8.5 Result of exceeding a rating....54
8.6 Relationship between ratings and operating requirements....54
8.7 Guidelines for ratings and operating requirements....54
8.8 Definition: Typical value....55
8.9 Typical value conditions....56
9 Revision History....56

1 Ratings

1.1 Thermal handling ratings

Symbol	Description	Min.	Max.	Unit	Notes
T_{STG}	Storage temperature	–55	150	°C	1
T_{SDR}	Solder temperature, lead-free	—	260	°C	2

1. Determined according to JEDEC Standard JESD22-A103, *High Temperature Storage Life*.
2. Determined according to IPC/JEDEC Standard J-STD-020, *Moisture/Reflow Sensitivity Classification for Nonhermetic Solid State Surface Mount Devices*.

1.2 Moisture handling ratings

Symbol	Description	Min.	Max.	Unit	Notes
MSL	Moisture sensitivity level	—	3	—	1

1. Determined according to IPC/JEDEC Standard J-STD-020, *Moisture/Reflow Sensitivity Classification for Nonhermetic Solid State Surface Mount Devices*.

1.3 ESD handling ratings

Symbol	Description	Min.	Max.	Unit	Notes
V_{HBM}	Electrostatic discharge voltage, human body model (All pins except RESET pin)	-4000	+4000	V	
	Electrostatic discharge voltage, human body model (RESET pin only)	-2500	+2500	V	1
V_{CDM}	Electrostatic discharge voltage, charged-device model (for corner pins)	-750	+750	V	
V_{CDM}	Electrostatic discharge voltage, charged-device model	-500	+500	V	2
V_{PESD}	Powered ESD voltage	-6000	+6000	V	
I_{LAT}	Latch-up current at ambient temperature of 105°C	-100	+100	mA	

1. Determined according to JEDEC Standard JESD22-A114, *Electrostatic Discharge (ESD) Sensitivity Testing Human Body Model (HBM)*.
2. Determined according to JEDEC Standard JESD22-C101, *Field-Induced Charged-Device Model Test Method for Electrostatic-Discharge-Withstand Thresholds of Microelectronic Components*.

1.4 Voltage and current operating ratings

Symbol	Description	Min.	Max.	Unit
V_{DD}	Digital supply voltage	–0.3	3.6	V
V_{DIO}	Digital input voltage (except $\overline{RESET}$, EXTAL, and XTAL)	–0.3	V_{DD} + 0.3	V
$V_{DTamper}$	Tamper input voltage	–0.3	V_{BAT} + 0.3	V
V_{AIO}	Analog[1], $\overline{RESET}$, EXTAL, and XTAL input voltage	–0.3	V_{DD} + 0.3	V
I_D	Instantaneous maximum current single pin limit (applies to all port pins)	–25	25	mA
V_{DDA}	Analog supply voltage	V_{DD} – 0.3	V_{DD} + 0.3	V
V_{BAT}	RTC battery supply voltage	–0.3	3.6	V

1. Analog pins are defined as pins that do not have an associated general purpose I/O port function.

2 General

2.1 AC electrical characteristics

Unless otherwise specified, propagation delays are measured from the 50% to the 50% point, and rise and fall times are measured at the 20% and 80% points, as shown in the following figure.

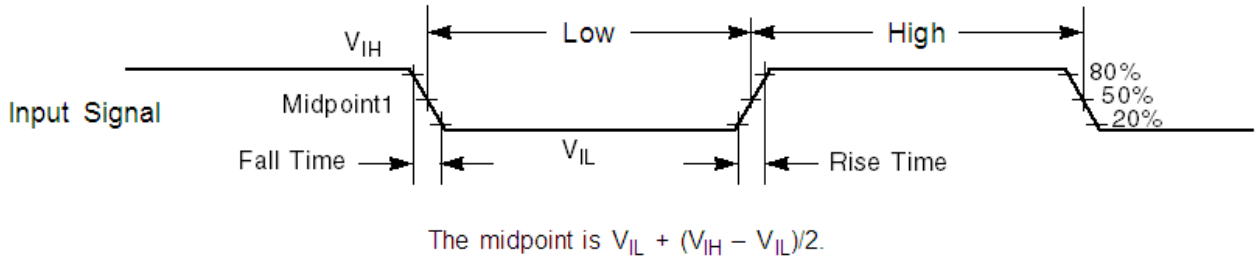

Figure 2. Input signal measurement reference

2.2 Nonswitching electrical specifications

2.2.1 Voltage and current operating requirements

Table 1. Voltage and current operating requirements

Symbol	Description	Min.	Max.	Unit	Notes
V_{DD}	Supply voltage when AFE is operational	2.7	3.6	V	
	Supply voltage when AFE is NOT operational	1.71	3.6	V	
V_{DDA}	Analog supply voltage	2.7	3.6	V	
$V_{DD} – V_{DDA}$	V_{DD}-to-V_{DDA} differential voltage	–0.1	0.1	V	
$V_{SS} – V_{SSA}$	V_{SS}-to-V_{SSA} differential voltage	–0.1	0.1	V	
V_{BAT}	RTC battery supply voltage	1.71	3.6	V	1
V_{IH}	Input high voltage • 2.7 V ≤ V_{DD} ≤ 3.6 V • 1.7 V ≤ V_{DD} ≤ 2.7 V	 0.7 × V_{DD} 0.75 × V_{DD}	 — —	 V V	
V_{IL}	Input low voltage • 2.7 V ≤ V_{DD} ≤ 3.6 V • 1.7 V ≤ V_{DD} ≤ 2.7 V	 — —	 0.35 × V_{DD} 0.3 × V_{DD}	 V V	
V_{HYS}	Input hysteresis	0.06 × V_{DD}	—	V	
I_{ICDIO}	Digital pin negative DC injection current — single pin • V_{IN} < V_{SS}–0.3V	–5	—	mA	
I_{ICAIO}	Analog[2], EXTAL, and XTAL pin DC injection current — single pin • V_{IN} < V_{SS}–0.3V (Negative current injection) • V_{IN} > V_{DD}+0.3V (Positive current injection)	 –3 —	 — +3	mA	
I_{ICcont}	Contiguous pin DC injection current —regional limit, includes sum of negative injection currents or sum of positive injection currents of 16 contiguous pins • Negative current injection • Positive current injection	 –25 —	 — +25	mA	
V_{RFVBAT}	V_{BAT} voltage required to retain the VBAT register file	V_{POR_VBAT}	—	V	

1. V_{BAT} always needs to be there for the chip to be operational.
2. Analog pins are defined as pins that do not have an associated general purpose I/O port function.

2.2.2 LVD and POR operating requirements

Table 2. V_{DD} supply LVD and POR operating requirements

Symbol	Description	Min.	Typ.	Max.	Unit	Notes
V_{POR}	Falling VDD POR detect voltage	0.8	1.1	1.5	V	

Table continues on the next page...

Table 2. V_{DD} supply LVD and POR operating requirements (continued)

Symbol	Description	Min.	Typ.	Max.	Unit	Notes
V_{LVDH}	Falling low-voltage detect threshold — high range (LVDV=01)	2.48	2.56	2.64	V	
	Low-voltage warning thresholds — high range					1
V_{LVW1H}	• Level 1 falling (LVWV=00)	2.62	2.70	2.78	V	
V_{LVW2H}	• Level 2 falling (LVWV=01)	2.72	2.80	2.88	V	
V_{LVW3H}	• Level 3 falling (LVWV=10)	2.82	2.90	2.98	V	
V_{LVW4H}	• Level 4 falling (LVWV=11)	2.92	3.00	3.08	V	
V_{HYSH}	Low-voltage inhibit reset/recover hysteresis — high range	—	80	—	mV	
V_{LVDL}	Falling low-voltage detect threshold — low range (LVDV=00)	1.54	1.60	1.66	V	
	Low-voltage warning thresholds — low range					1
V_{LVW1L}	• Level 1 falling (LVWV=00)	1.74	1.80	1.86	V	
V_{LVW2L}	• Level 2 falling (LVWV=01)	1.84	1.90	1.96	V	
V_{LVW3L}	• Level 3 falling (LVWV=10)	1.94	2.00	2.06	V	
V_{LVW4L}	• Level 4 falling (LVWV=11)	2.04	2.10	2.16	V	
V_{HYSL}	Low-voltage inhibit reset/recover hysteresis — low range	—	60	—	mV	
V_{BG}	Bandgap voltage reference	0.97	1.00	1.03	V	
t_{LPO}	Internal low power oscillator period — factory trimmed	900	1000	1100	μs	

1. Rising threshold is the sum of falling threshold and hysteresis voltage

Table 3. VBAT power operating requirements

Symbol	Description	Min.	Typ.	Max.	Unit	Notes
V_{POR_VBAT}	Falling VBAT supply POR detect voltage	0.8	1.1	1.5	V	

2.2.3 Voltage and current operating behaviors

Table 4. Voltage and current operating behaviors

Symbol	Description	Min.	Max.	Unit	Notes
V_{OH}	Output high voltage — low-drive strength				
	• 2.7 V ≤ V_{DD} ≤ 3.6 V, I_{OH} = 5 mA	V_{DD} – 0.5	—	V	
	• 1.71 V ≤ V_{DD} ≤ 2.7 V, I_{OH} = 2.5 mA	V_{DD} – 0.5	—	V	
I_{OHT}	Output high current total for all ports	—	100	mA	

Table continues on the next page...

Table 4. Voltage and current operating behaviors (continued)

Symbol	Description	Min.	Max.	Unit	Notes
V_{OL}	Output low voltage — low-drive strength • 2.7 V ≤ V_{DD} ≤ 3.6 V, I_{OL} = 5 mA • 1.71 V ≤ V_{DD} ≤ 2.7 V, I_{OL} = 2.5 mA	 — —	 0.5 0.5	 V V	
I_{OLT}	Output low current total for all ports	—	100	mA	
I_{OZ}	Hi-Z (off-state) leakage current (per pin)	—	1	μA	
R_{PU}	Internal pull-up resistors	30	60	kΩ	1
R_{PD}	Internal pull-down resistors	30	60	kΩ	2

1. Measured at V_{input} = V_{SS}.
2. Measured at V_{input} = V_{DD}.

2.2.4 Power mode transition operating behaviors

All specifications except t_{POR}, and VLLSx→RUN recovery times in the following table assume this clock configuration:

- CPU and system clocks = 75 MHz
- Bus clock = 25 MHz
- Flash clock = 25 MHz
- Temperature: –40 °C, 25 °C, and 105 °C
- V_{DD}: 1.71 V, 3.3 V, and 3.6 V

Table 5. Power mode transition operating behaviors

Symbol	Description	Min.	Typ.	Max.	Unit	Notes
t_{POR}	After a POR event, amount of time from the point V_{DD} reaches 1.71 V to execute the first instruction across the operating temperature range of the chip.	563		659	μs	1
	• VLLS0 → RUN	—	370	382	μs	
	• VLLS1 → RUN	—	370	382	μs	
	• VLLS2 → RUN	—	270	275	μs	
	• VLLS3 → RUN	—	270	275	μs	
	• VLPS → RUN	—	5	6	μs	
	• STOP → RUN	—	5	6	μs	

1. Normal boot (FTFA_OPT[LPBOOT]=1)

2.2.5 Power consumption operating behaviors

NOTE

The maximum (Max.) values stated in the following table represent characterized results equivalent to the mean plus three times the standard deviation (mean + 3×sigma).

Table 6. Power consumption operating behaviors

Symbol	Description	Min.	Typ.	Max.	Unit	Notes
I_{DDA}	Analog supply current	—	—	See note	mA	1
I_{DD_RUN}	Run mode current — all peripheral clocks disabled, code executing from flash • @ 3.0 V • 25 °C • –40 °C • 105 °C	 — — —	 7.69 7.68 7.94	 7.954 7.92 8.159	 mA mA mA	2
I_{DD_RUN}	Run mode current — all peripheral clocks enabled, code executing from flash • @ 3.0 V • 25 °C • –40 °C • 105 °C	 — — —	 12.38 12.32 12.67	 12.827 12.758 13.051	 mA mA mA	2
I_{DD_WAIT}	Wait mode high frequency current at 3.0 V— all peripheral clocks disabled and Flash is not in low-power • 25 °C • –40 °C • 105 °C	 — — —	 5.48 5.46 5.68	 5.612 5.601 5.782	 mA mA mA	2
I_{DD_WAIT}	Wait mode high frequency current at 3.0 V— all peripheral clocks disabled and Flash disabled (put in low-power) • 25 °C • –40 °C • 105 °C	 — — —	 4.55 4.56 4.74	 4.664 4.683 4.815	 mA mA mA	2, 3
I_{DD_VLPR}	Very-low-power run mode current at 3.0 V — all peripheral clocks disabled • 25 °C • –40 °C • 105 °C	 — — —	 171 172 280	 500 470 900	 μA μA μA	4
I_{DD_VLPR}	Very-low-power run mode current at 3.0 V — all peripheral clocks enabled • 25 °C	 — —	 341 327	 530 500	 μA μA	5

Table continues on the next page...

Table 6. Power consumption operating behaviors (continued)

Symbol	Description	Min.	Typ.	Max.	Unit	Notes
	• –40 °C • 105 °C	— —	456 —	1000 —	μA μA	
I_{DD_VLPW}	Very-low-power wait mode current at 3.0 V — all peripheral clocks disabled • 25 °C • –40 °C • 105 °C	— — —	112 114 226	350 330 800	μA μA μA	6
I_{DD_STOP}	Stop mode current at 3.0 V • 25 °C • –40 °C • 105 °C	— — —	404 386 569	730 700 800	μA μA μA	
I_{DD_VLPS}	Very-low-power stop mode current at 3.0 V • 25 °C • –40 °C • 105 °C	— — —	6.05 2.63 145	46 44 700	μA μA μA	
I_{DD_VLLS3}	Very low-leakage stop mode 3 current at 3.0 V • 25 °C • –40 °C • 105 °C	— — —	2.49 1.97 20.1	3.5 3.3 85	μA μA μA	
I_{DD_VLLS2}	Very low-leakage stop mode 2 current at 3.0 V • 25 °C • –40 °C • 105 °C	— — —	2.31 1.94 14.5	2.6 2.5 59.5	μA μA μA	
I_{DD_VLLS1}	Very low-leakage stop mode 1 current at 3.0 V • 25 °C • –40 °C • 105 °C	— — —	1.16 0.937 10.7	1.7 1.6 38.8	μA μA μA	
I_{DD_VLLS0}	Very low-leakage stop mode 0 current at 3.0 V with POR detect circuit disabled • 25 °C • –40 °C • 105 °C	— — —	0.22 0.068 7.72	0.67 0.64 38	μA μA μA	
I_{DD_VLLS0}	Very low-leakage stop mode 0 current at 3.0 V with POR detect circuit enabled • 25 °C • –40 °C • 105 °C	— — —	0.502 0.349 9.07	0.76 0.72 38.4	μA μA μA	
I_{DD_VBAT}	Average current with RTC and 32 kHz disabled at 3.0 V and VDD is OFF • 25 °C	— —	0.243 0.143	1 0.95	μA μA	

Table continues on the next page...

Table 6. Power consumption operating behaviors (continued)

Symbol	Description	Min.	Typ.	Max.	Unit	Notes
	• –40 °C • 105 °C	—	6.05	15	μA	
I_{DD_VBAT}	Average current when VDD is OFF and LFSR and Tamper clocks set to 2 Hz.					7, 8
	• @ 3.0 V	—				
	• 25 °C		1.42	3	μA	
	• –40 °C		1.24	2.5	μA	
	• 105 °C		8.04	16	μA	

1. See AFE specification for I_{DDA}.
2. 75 MHz core and system clock, 25 MHz bus clock, and 25 MHz flash clock. MCG configured for FBE mode. All peripheral clocks disabled.
3. Should be reduced by 500 μA.
4. 2 MHz core/system clock, and 1 MHz bus/flash clock. MCG configured for BLPE mode. All peripheral clocks disabled. Code executing while (1) loop from flash.
5. 2 MHz core/system clock, and 1 MHz bus/flash clock. MCG configured for BLPE mode. All peripheral clocks enabled but peripherals are not in active operation. Code executing while (1) loop from flash.
6. 2 MHz core/system clock, and 1 MHz bus/flash clock. MCG configured for BLPE mode. All peripheral clocks disabled. No flash accesses; some activity on DMA & RAM assumed.
7. Includes 32 kHz oscillator current and RTC operation.
8. An external power switch for VBAT should be present on board to have better battery life and keep VBAT pin powered in all conditions. There is no internal power switch in RTC.

2.2.6 EMC radiated emissions operating behaviors

Table 7. EMC radiated emissions operating behaviors

Symbol	Description	Frequency band (MHz)	Typ.	Unit	Notes
V_{RE1}	Radiated emissions voltage, band 1	0.15–50	14	dBμV	
V_{RE2}	Radiated emissions voltage, band 2	50–150	16	dBμV	
V_{RE3}	Radiated emissions voltage, band 3	150–500	12	dBμV	
V_{RE4}	Radiated emissions voltage, band 4	500–1000	5	dBμV	
V_{RE_IEC}	IEC level	0.15–1000	M	—	1

1. V_{DD} = 3.3 V, T_A = 25 °C, f_{OSC} = 10 MHz (crystal), f_{SYS} = 75 MHz, f_{BUS} = 25 MHz

2.2.7 Designing with radiated emissions in mind

To find application notes that provide guidance on designing your system to minimize interference from radiated emissions:

1. Go to www.freescale.com.
2. Perform a keyword search for “EMC design.”

2.2.8 Capacitance attributes

Table 8. Capacitance attributes

Symbol	Description	Min.	Max.	Unit
C_{IN_A}	Input capacitance: analog pins	—	7	pF
C_{IN_D}	Input capacitance: digital pins	—	7	pF
$C_{IN_D_io60}$	Input capacitance: fast digital pins	—	9	pF

2.3 Switching specifications

2.3.1 Device clock specifications

Table 9. Device clock specifications

Symbol	Description	Min.	Max.	Unit	Notes
Normal run mode					
f_{SYS}	System and core clock		75	MHz	
f_{BUS}	Bus clock		25	MHz	
f_{FLASH}	Flash clock		25	MHz	
f_{AFE}	AFE Modulator clock		6.5	MHz	
VLPR mode[1]					
f_{SYS}	System and core clock		4	MHz	
f_{BUS}	Bus clock		1	MHz	
f_{FLASH}	Flash clock		1	MHz	
f_{AFE}	AFE Modulator clock[2]		1.6	MHz	

1. The frequency limitations in VLPR mode here override any frequency specification listed in the timing specification for any other module.
2. AFE working in low-power mode.

2.3.2 General switching specifications

These general purpose specifications apply to all signals configured for GPIO, UART, and I^2C signals.

Table 10. General switching specifications

Symbol	Description	Min.	Max.	Unit	Notes
	GPIO pin interrupt pulse width (digital glitch filter disabled) — Synchronous path	1.5	—	Bus clock cycles	1
	GPIO pin interrupt pulse width (digital glitch filter disabled) — Asynchronous path	16	—	ns	
	External reset pulse width (digital glitch filter disabled)	100	—	ns	2
	Port rise and fall time				
	• Slew disabled				
	• $1.71 \le V_{DD} \le 2.7$ V	—	8	ns	
	• $2.7 \le V_{DD} \le 3.6$ V	—	5	ns	
	• Slew enabled				
	• $1.71 \le V_{DD} \le 2.7$ V	—	27	ns	
	• $2.7 \le V_{DD} \le 3.6$ V	—	16	ns	

1. The greater synchronous and asynchronous timing must be met.
2. This is the shortest pulse that is guaranteed to be recognized.

2.4 Thermal specifications

2.4.1 Thermal operating requirements

Table 11. Thermal operating requirements

Symbol	Description	Min.	Max.[1]	Unit
T_J	Die junction temperature	–40	125	°C
T_A	Ambient temperature	–40	105	°C

1. Maximum T_A can be exceeded ***only if*** the user ensures that T_J does ***not*** exceed maximum T_J . The simplest method to determine T_J is:

   $T_J = T_A + R_{\theta JA} \times$ chip power dissipation.

2.4.2 Thermal attributes

Board type	Symbol	Description	100 LQFP	144 LQFP	Unit	Notes
Single-layer (1s)	$R_{\theta JA}$	Thermal resistance, junction to ambient	62	55	°C/W	1

Table continues on the next page...

Board type	Symbol	Description	100 LQFP	144 LQFP	Unit	Notes
		(natural convection)				
Four-layer (2s2p)	$R_{\theta JA}$	Thermal resistance, junction to ambient (natural convection)	49	46	°C/W	1
Single-layer (1s)	$R_{\theta JMA}$	Thermal resistance, junction to ambient (200 ft./min. air speed)	52	46	°C/W	1
Four-layer (2s2p)	$R_{\theta JMA}$	Thermal resistance, junction to ambient (200 ft./min. air speed)	43	40	°C/W	1
—	$R_{\theta JB}$	Thermal resistance, junction to board	35	34	°C/W	2
—	$R_{\theta JC}$	Thermal resistance, junction to case	18	15	°C/W	3
—	Ψ_{JT}	Thermal characterization parameter, junction to package top outside center (natural convection)	2	2	°C/W	4

1. Determined according to JEDEC Standard JESD51-2, *Integrated Circuits Thermal Test Method Environmental Conditions—Natural Convection (Still Air)*, or EIA/JEDEC Standard JESD51-6, *Integrated Circuit Thermal Test Method Environmental Conditions—Forced Convection (Moving Air)*.
2. Determined according to JEDEC Standard JESD51-8, *Integrated Circuit Thermal Test Method Environmental Conditions—Junction-to-Board*.
3. Determined according to Method 1012.1 of MIL-STD 883, *Test Method Standard, Microcircuits*, with the cold plate temperature used for the case temperature. The value includes the thermal resistance of the interface material between the top of the package and the cold plate.
4. Determined according to JEDEC Standard JESD51-2, *Integrated Circuits Thermal Test Method Environmental Conditions—Natural Convection (Still Air)*.

3 Peripheral operating requirements and behaviors

3.1 Core modules

3.1.1 Single Wire Debug (SWD)

Table 12. SWD switching characteristics at 2.7 V (2.7-3.6 V)

Symbol	Description	Value	Unit	Notes
SWD CLK	Frequency of SWD operation	20	MHz	
Inputs, t_{SUI}	Data setup time	5	ns	1
inputs, t_{HI}	Data hold time	0	ns	1
after clock edge, t_{DVO}	Data valid Time	32	ns	1
t_{HO}	Data Valid Hold	0	ns	1

1. Input transition assumed = 1 ns. Output transition assumed = 50 pF.

Table 13. Switching characteristics at 1.7 V (1.7-3.6 V)

Symbol	Description	Value	Unit	Notes
SWD CLK	Frequency of SWD operation	18	MHz	
Inputs, t_{SUI}	Data setup time	4.7	ns	1
inputs, t_{HI}	Data hold time	0	ns	1
after clock edge, t_{DVO}	Data valid Time	49.4	ns	2
t_{HO}	Data Valid Hold	0	ns	1

1. Input transition assumed = 1 ns. Output transition assumed = 50 pF.
2. Frequency of SWD clock (18 MHz) is applicable only in case the input setup time of the device outside is not more than 6.15 ns, else the frequency of SWD clock would need to be lowered.

3.1.2 Analog Front End (AFE)

AFE switching characteristics at (2.7 V-3.6 V)

Case 1: Clock is coming In and Data is also coming In (XBAR ports timed with respect to AFE clock defined at pad PTB7, PTE3, and PTK4).

Table 14. AFE switching characteristics (2.7 V-3.6 V)

Symbol	Description	Value	Unit	Notes
AFE CLK	Frequency of operation	10	MHz	
Inputs, t_{SUI}	Data setup time	5	ns	1
inputs, t_{HI}	Data hold time	0	ns	1

1. Input Transition: 1 ns. Output Load: 50 pF.

Case 2: Clock is going Out and Data is coming In (XBAR ports timed with respect to generated clock defined at the XBAR out ports).

Table 15. AFE switching characteristics (2.7 V-3.6 V)

Symbol	Description	Value	Unit	Notes
AFE CLK	Frequency of operation	6.2	MHz	
Inputs, t_{SUI}	Data setup time	36	ns	1
inputs, t_{HI}	Data hold time	0	ns	1

1. Input Transition: 1 ns. Output Load: 50 pF.

AFE switching characteristics at (1.7 V-3.6 V)

Case 1: Clock is coming In and Data is also coming In (XBAR ports timed with respect to AFE clock defined at pad PTB7, PTE3, and PTK4).

Table 16. AFE switching characteristics (1.7 V-3.6 V)

Symbol	Description	Value	Unit	Notes
AFE CLK	Frequency of operation	13	MHz	
Inputs, t_{SUI}	Data setup time	30	ns	1
inputs, t_{HI}	Data hold time	5	ns	1

1. Input Transition: 1 ns. Output Load: 50 pF.

Case 2: Clock is going Out and Data is coming In (XBAR ports timed with respect to generated clock defined at XBAR out ports).

Table 17. AFE switching characteristics (1.7 V-3.6 V)

Symbol	Description	Value	Unit	Notes
AFE CLK	Frequency of operation	6.5	MHz	
Inputs, t_{SUI}	Data setup time	36	ns	1
inputs, t_{HI}	Data hold time	0	ns	1

1. Input Transition: 1 ns. Output Load: 50 pF.

3.2 Clock modules

3.2.1 MCG specifications

Table 18. MCG specifications

Symbol	Description		Min.	Typ.	Max.	Unit	Notes
f_{ints_ft}	Internal reference frequency (slow clock) — factory trimmed at nominal V_{DD} and 25 °C		—	32.768	—	kHz	
Δf_{ints_t}	Total deviation of internal reference frequency (slow clock) over voltage and temperature		—	+0.5/-0.7	—	%	
Δf_{ints_t}	Total deviation of internal reference frequency (slow clock) over fixed voltage and full operating temperature range		-2	—	+2	%	
f_{ints_t}	Internal reference frequency (slow clock) — user trimmed		31.25	—	39.0625	kHz	
$\Delta_{fdco_res_t}$	Resolution of trimmed average DCO output frequency at fixed voltage and temperature — using SCTRIM and SCFTRIM		—	± 0.3	± 0.6	$\%f_{dco}$	
Δf_{dco_t}	Total deviation of trimmed average DCO output frequency over voltage and temperature		—	+0.5/-0.7		$\%f_{dco}$	1
Δf_{dco_t}	Total deviation of trimmed average DCO output frequency over fixed voltage and temperature range of 0–70°C		—	± 0.4	—	$\%f_{dco}$	1
f_{intf_ft}	Internal reference frequency (fast clock) — factory trimmed at nominal V_{DD} and 25°C		—	4	—	MHz	
Δf_{intf_t}	Total deviation of internal reference frequency (fast clock) over voltage and temperature — factory trimmed at nominal V_{DD} and 25°C		—	+1/-2	—	%	
f_{intf_t}	Internal reference frequency (fast clock) — user trimmed at nominal V_{DD} and 25 °C		3	—	5	MHz	
f_{loc_low}	Loss of external clock minimum frequency — RANGE = 00		(3/5) x f_{ints_t}	—	—	kHz	
f_{loc_high}	Loss of external clock minimum frequency — RANGE = 01, 10, or 11		(16/5) x f_{ints_t}	—	—	kHz	
FLL							
f_{dco}	DCO output frequency range	Low-range (DRS=00) $640 \times f_{ints_t}$	20	20.97	22	MHz	2, 3
		Mid-range (DRS=01) $1280 \times f_{ints_t}$	40	41.94	45	MHz	
		Mid-high range (DRS=10) $1920 \times f_{ints_t}$	60	62.91	67	MHz	
		High-range (DRS=11) $2560 \times f_{ints_t}$	80	83.89	90	MHz	
$f_{dco_t_DMX32}$	DCO output frequency	Low-range (DRS=00) $732 \times f_{ints_t}$	—	23.99	—	MHz	4, 5, 6

Table continues on the next page...

Table 18. MCG specifications (continued)

Symbol	Description		Min.	Typ.	Max.	Unit	Notes
		Mid-range (DRS=01) $1464 \times f_{ints_t}$	—	47.97	—	MHz	
		Mid-high range (DRS=10) $2197 \times f_{ints_t}$	—	71.99	—	MHz	
		High-range (DRS=11) $2929 \times f_{ints_t}$	—	95.98	—	MHz	
J_{cyc_fll}	FLL period jitter		—	70	140	ps	7
$t_{fll_acquire}$	FLL target frequency acquisition time		—	—	1	ms	8
			PLL				
f_{vco}	VCO operating frequency		11.71875	12.288	14.6484375	MHz	
I_{pll}	PLL operating current • IO 3.3 V current • Max core voltage current		—	300 100	—	μA	
f_{pll_ref}	PLL reference frequency range		31.25	32.768	39.0625	kHz	
J_{cyc_pll}	PLL period jitter (RMS) • f_{vco} = 12 MHz				700	ps	
D_{lock}	Lock entry frequency tolerance		± 1.49	—	± 2.98	%	
D_{unl}	Lock exit frequency tolerance		± 4.47	—	± 5.97	%	
t_{pll_lock}	Lock detector detection time		—	—	$150 \times 10^{-6} + 1075(1/f_{pll_ref})$	s	

1. This parameter is measured with the internal reference (slow clock) being used as a reference to the FLL (FEI clock mode).
2. These typical values listed are with the slow internal reference clock (FEI) using factory trim and DMX32=0.
3. Chip max freq is 75 MHz, so High-range of DCO cannot be used and should not be configured.
4. These typical values listed are with the slow internal reference clock (FEI) using factory trim and DMX32=1.
5. The resulting clock frequency must not exceed the maximum specified clock frequency of the device.
6. Chip max freq is 75 MHz, so High-range of DCO cannot be used and should not be configured.
7. This specification is based on standard deviation (RMS) of period or frequency.
8. This specification applies to any time the FLL reference source or reference divider is changed, trim value is changed, DMX32 bit is changed, DRS bits are changed, or changing from FLL disabled (BLPE, BLPI) to FLL enabled (FEI, FEE, FBE, FBI). If a crystal/resonator is being used as the reference, this specification assumes it is already running.

3.2.2 Oscillator electrical specifications

3.2.2.1 Oscillator DC electrical specifications

Table 19. Oscillator DC electrical specifications

Symbol	Description	Min.	Typ.	Max.	Unit	Notes
V_{DD}	Supply voltage	1.71	—	3.6	V	
I_{DDOSC}	Supply current — low-power mode (HGO=0)					1
	• 32 kHz	—	500	—	nA	
	• 1 MHz	—	200	—	μA	
	• 4 MHz	—	200	—	μA	
	• 8 MHz (RANGE=01)	—	300	—	μA	
	• 16 MHz	—	950	—	μA	
	• 24 MHz	—	1.2	—	mA	
	• 32 MHz	—	1.5	—	mA	
I_{DDOSC}	Supply current — high-gain mode (HGO=1)					1
	• 32 kHz	—	25	—	μA	
	• 1 MHz	—	300	—	μA	
	• 4 MHz	—	400	—	μA	
	• 8 MHz (RANGE=01)	—	500	—	μA	
	• 16 MHz	—	2.5	—	mA	
	• 24 MHz	—	3	—	mA	
	• 32 MHz	—	4	—	mA	
C_x	EXTAL load capacitance	—	—	—		2, 3
C_y	XTAL load capacitance	—	—	—		2, 3
	Capacitance of EXTAL		—	—		
	• Die level (100 LQFP)	247			ff	
	• Package level (100 LQFP)	0.495			pF	
	Capacitance of XTAL		—	—		
	• Die level (100 LQFP)	265			ff	
	• Package level (100 LQFP)	0.495			pF	
R_F	Feedback resistor — low-frequency, low-power mode (HGO=0)	—	—	—	MΩ	2, 4
	Feedback resistor — low-frequency, high-gain mode (HGO=1)	—	10	—	MΩ	
	Feedback resistor — high-frequency, low-power mode (HGO=0)	—	—	—	MΩ	
	Feedback resistor — high-frequency, high-gain mode (HGO=1)	—	1	—	MΩ	
R_S	Series resistor — low-frequency, low-power mode (HGO=0)	—	—	—	kΩ	
	Series resistor — low-frequency, high-gain mode (HGO=1)	—	200	—	kΩ	

Table continues on the next page...

Table 19. Oscillator DC electrical specifications (continued)

Symbol	Description	Min.	Typ.	Max.	Unit	Notes
	Series resistor — high-frequency, low-power mode (HGO=0)	—	—	—	kΩ	
	Series resistor — high-frequency, high-gain mode (HGO=1)					
	• 1 MHz resonator	—	6.6	—	kΩ	
	• 2 MHz resonator	—	3.3	—	kΩ	
	• 4 MHz resonator	—	0	—	kΩ	
	• 8 MHz resonator	—	0	—	kΩ	
	• 16 MHz resonator	—	0	—	kΩ	
	• 20 MHz resonator	—	0	—	kΩ	
	• 32 MHz resonator	—	0	—	kΩ	
V_{pp}[5]	Peak-to-peak amplitude of oscillation (oscillator mode) — low-frequency, low-power mode (HGO=0)	—	0.6	—	V	
	Peak-to-peak amplitude of oscillation (oscillator mode) — low-frequency, high-gain mode (HGO=1)	—	V_{DD}	—	V	
	Peak-to-peak amplitude of oscillation (oscillator mode) — high-frequency, low-power mode (HGO=0)	—	0.6	—	V	
	Peak-to-peak amplitude of oscillation (oscillator mode) — high-frequency, high-gain mode (HGO=1)	—	V_{DD}	—	V	

1. V_{DD}=3.3 V, Temperature =25 °C
2. See crystal or resonator manufacturer's recommendation
3. C_x and C_y can be provided by using either integrated capacitors or external components.
4. When low-power mode is selected, R_F is integrated and must not be attached externally.
5. The EXTAL and XTAL pins should only be connected to required oscillator components and must not be connected to any other device.

3.2.2.2 Oscillator frequency specifications

Table 20. Oscillator frequency specifications

Symbol	Description	Min.	Typ.	Max.	Unit	Notes
f_{osc_lo}	Oscillator crystal or resonator frequency — low-frequency mode (MCG_C2[RANGE]=00)	32	—	40	kHz	
$f_{osc_hi_1}$	Oscillator crystal or resonator frequency — high-frequency mode (low range) (MCG_C2[RANGE]=01)	1	—	8	MHz	
$f_{osc_hi_2}$	Oscillator crystal or resonator frequency — high frequency mode (high range) (MCG_C2[RANGE]=1x)	8	—	32	MHz	

Table continues on the next page...

Table 20. Oscillator frequency specifications (continued)

Symbol	Description	Min.	Typ.	Max.	Unit	Notes
f_{ec_extal}	Input clock frequency (external clock mode)	—	—	48	MHz	1, 2
t_{dc_extal}	Input clock duty cycle (external clock mode)	40	50	60	%	
t_{cst}	Crystal startup time — 32 kHz low-frequency, low-power mode (HGO=0)	—		—	ms	3, 4
	Crystal startup time — 32 kHz low-frequency, high-gain mode (HGO=1)	—		—	ms	
	Crystal startup time — 8 MHz high-frequency (MCG_C2[RANGE]=01), low-power mode (HGO=0)	—	0.6	—	ms	
	Crystal startup time — 8 MHz high-frequency (MCG_C2[RANGE]=01), high-gain mode (HGO=1)	—	1	—	ms	

1. Other frequency limits may apply when external clock is being used as a reference for the FLL or PLL.
2. When transitioning from FEI or FBI to FBE mode, restrict the frequency of the input clock so that, when it is divided by FRDIV, it remains within the limits of the DCO input clock frequency.
3. Proper PC board layout procedures must be followed to achieve specifications.
4. Crystal startup time is defined as the time between the oscillator being enabled and the OSCINIT bit in the MCG_S register being set.

3.2.3 32 kHz oscillator electrical characteristics

3.2.3.1 32kHz Oscillator Maximum Ratings

NOTE

Functional operating conditions are given in DC Electrical Specifications. Absolute Maximum Ratings are stress ratings only, and functional operation at the maxima is not guaranteed. Stress beyond those listed may affect device reliability or cause permanent damage to the device.

Table 21. 32kHz oscillator absolute maximum ratings

Num	Symbol	Description	Min.	Max.	Unit
1	$V_{DD33OSC}$	RTC oscillator (A_IP_OSC_3v32k VLP_NN_C90LP) Module 3.3V Analog Supply Voltage	–0.3	3.6	V
2	V_{EXTAL}	EXTAL Input Voltage	–0.3	3.6	V

Table continues on the next page...

Table 21. 32kHz oscillator absolute maximum ratings (continued)

Num	Symbol	Description	Min.	Max.	Unit
3	V_{XTAL}	XTAL Input Voltage	–0.3	3.6	V
4	T_A	Operating Temperature Range (Packaged)	–40	135	°C
5	T_J	Operating Temperature Range (Junction)	–40	135	°C
6	T_{stg}	Storage Temperature Range	–65	150	°C

3.2.3.2 32 kHz oscillator DC electrical specifications

Table 22. 32kHz oscillator DC electrical specifications

Symbol	Description	Min.	Typ.	Max.	Unit
V_{BAT}	Supply voltage	1.71	—	3.6	V
R_F	Internal feedback resistor	—	100	—	MΩ
C_{para}	Parasitical capacitance of EXTAL32 and XTAL32	—	5	7	pF
V_{pp}[1]	Peak-to-peak amplitude of oscillation	—	0.6	—	V

1. When a crystal is being used with the 32 kHz oscillator, the EXTAL32 and XTAL32 pins should only be connected to required oscillator components and must not be connected to any other devices.

3.2.3.3 32 kHz oscillator frequency specifications

Table 23. 32 kHz oscillator frequency specifications

Symbol	Description	Min.	Typ.	Max.	Unit	Notes
f_{osc_lo}	Oscillator crystal	—	32.768	—	kHz	
t_{start}	Crystal start-up time	—	1000	—	ms	1
$f_{ec_extal32}$	Externally provided input clock frequency	—	32.768	—	kHz	2
$v_{ec_extal32}$	Externally provided input clock amplitude	700	—	V_{BAT}	mV	2, 3

1. Proper PC board layout procedures must be followed to achieve specifications.
2. This specification is for an externally supplied clock driven to EXTAL32 and does not apply to any other clock input. The oscillator remains enabled and XTAL32 must be left unconnected.
3. The parameter specified is a peak-to-peak value and V_{IH} and V_{IL} specifications do not apply. The voltage of the applied clock must be within the range of V_{SS} to V_{BAT}.

NOTE

The 32 kHz oscillator works in low power mode by default and cannot be moved into high power/gain mode.

3.3 Memories and memory interfaces

3.3.1 Flash electrical specifications

This section describes the electrical characteristics of the flash memory module.

3.3.1.1 Flash timing specifications — program and erase

The following specifications represent the amount of time the internal charge pumps are active and do not include command overhead.

Table 24. NVM program/erase timing specifications

Symbol	Description	Min.	Typ.	Max.	Unit	Notes
t_{hvpgm4}	Longword Program high-voltage time	—	7.5	18	μs	—
$t_{hversscr}$	Sector Erase high-voltage time	—	13	113	ms	1
$t_{hversall}$	Erase All high-voltage time	—	52	452	ms	1

1. Maximum time based on expectations at cycling end-of-life.

3.3.1.2 Flash timing specifications — commands

Table 25. Flash command timing specifications

Symbol	Description	Min.	Typ.	Max.	Unit	Notes
$t_{rd1sec1k}$	Read 1s Section execution time (flash sector)	—	—	60	μs	1
t_{pgmchk}	Program Check execution time	—	—	45	μs	1
t_{rdrsrc}	Read Resource execution time	—	—	30	μs	1
t_{pgm4}	Program Longword execution time	—	65	145	μs	—
t_{ersscr}	Erase Flash Sector execution time	—	14	114	ms	2
t_{rd1all}	Read 1s All Blocks execution time	—	—	1.8	ms	1
t_{rdonce}	Read Once execution time	—	—	25	μs	1
$t_{pgmonce}$	Program Once execution time	—	65	—	μs	—
t_{ersall}	Erase All Blocks execution time	—	88	650	ms	2
t_{vfykey}	Verify Backdoor Access Key execution time	—	—	30	μs	1

1. Assumes 25 MHz flash clock frequency.
2. Maximum times for erase parameters based on expectations at cycling end-of-life.

3.3.1.3 Flash high voltage current behaviors

Table 26. Flash high voltage current behaviors

Symbol	Description	Min.	Typ.	Max.	Unit
I_{DD_PGM}	Average current adder during high voltage flash programming operation	—	2.5	6.0	mA
I_{DD_ERS}	Average current adder during high voltage flash erase operation	—	1.5	4.0	mA

3.3.1.4 Reliability specifications

Table 27. NVM reliability specifications

Symbol	Description	Min.	Typ.[1]	Max.	Unit	Notes
Program Flash						
$t_{nvmretp10k}$	Data retention after up to 10 K cycles	5	50	—	years	—
$t_{nvmretp1k}$	Data retention after up to 1 K cycles	20	100	—	years	—
$n_{nvmcycp}$	Cycling endurance	10 K	50 K	—	cycles	2

1. Typical data retention values are based on measured response accelerated at high temperature and derated to a constant 25 °C use profile. Engineering Bulletin EB618 does not apply to this technology. Typical endurance defined in Engineering Bulletin EB619.
2. Cycling endurance represents number of program/erase cycles at –40 °C ≤ T_j ≤ 105 °C.

3.4 Analog

3.4.1 ADC electrical specifications

All ADC channels meet the 12-bit single-ended accuracy specifications.

3.4.1.1 16-bit ADC operating conditions

Table 28. 16-bit ADC operating conditions

Symbol	Description	Conditions	Min.	Typ.[1]	Max.	Unit	Notes
V_{DDA}	Supply voltage	Absolute	1.71	—	3.6	V	—
ΔV_{DDA}	Supply voltage	Delta to V_{DD} ($V_{DD} – V_{DDA}$)	-100	0	+100	mV	2
ΔV_{SSA}	Ground voltage	Delta to V_{SS} ($V_{SS} – V_{SSA}$)	-100	0	+100	mV	2
V_{REFH}	ADC reference voltage high	Absolute	V_{DDA}	V_{DDA}	V_{DDA}	V	3
V_{REFL}	ADC reference voltage low	Absolute	V_{SSA}	V_{SSA}	V_{SSA}	V	4

Table continues on the next page...

Table 28. 16-bit ADC operating conditions (continued)

Symbol	Description	Conditions	Min.	Typ.[1]	Max.	Unit	Notes
V_{ADIN}	Input voltage		V_{SSA}	—	V_{DDA}	V	—
C_{ADIN}	Input capacitance	• 16-bit mode • 8-bit / 10-bit / 12-bit modes	— —	8 4	10 5	pF	—
R_{ADIN}	Input series resistance		—	2	5	kΩ	—
R_{AS}	Analog source resistance (external)	12-bit modes f_{ADCK} < 4 MHz	—	—	5	kΩ	5
f_{ADCK}	ADC conversion clock frequency	≤ 12-bit mode	1.0	—	18.0	MHz	6
f_{ADCK}	ADC conversion clock frequency	16-bit mode	2.0	—	12.0	MHz	6
C_{rate}	ADC conversion rate	≤ 12-bit modes No ADC hardware averaging Continuous conversions enabled, subsequent conversion time	20.000	—	818.330	ksps	7
C_{rate}	ADC conversion rate	16-bit mode No ADC hardware averaging Continuous conversions enabled, subsequent conversion time	37.037	—	461.467	ksps	7

1. Typical values assume V_{DDA} = 3.0 V, Temp = 25 °C, f_{ADCK} = 1.0 MHz, unless otherwise stated. Typical values are for reference only, and are not tested in production.
2. DC potential difference.
3. V_{REFH} is internally tied to V_{DDA}.
4. V_{REFL} is internally tied to V_{SSA}.
5. This resistance is external to MCU. To achieve the best results, the analog source resistance must be kept as low as possible. The results in this data sheet were derived from a system that had < 8 Ω analog source resistance. The R_{AS}/C_{AS} time constant should be kept to < 1 ns.
6. To use the maximum ADC conversion clock frequency, CFG2[ADHSC] must be set and CFG1[ADLPC] must be clear.
7. For guidelines and examples of conversion rate calculation, download the ADC calculator tool.

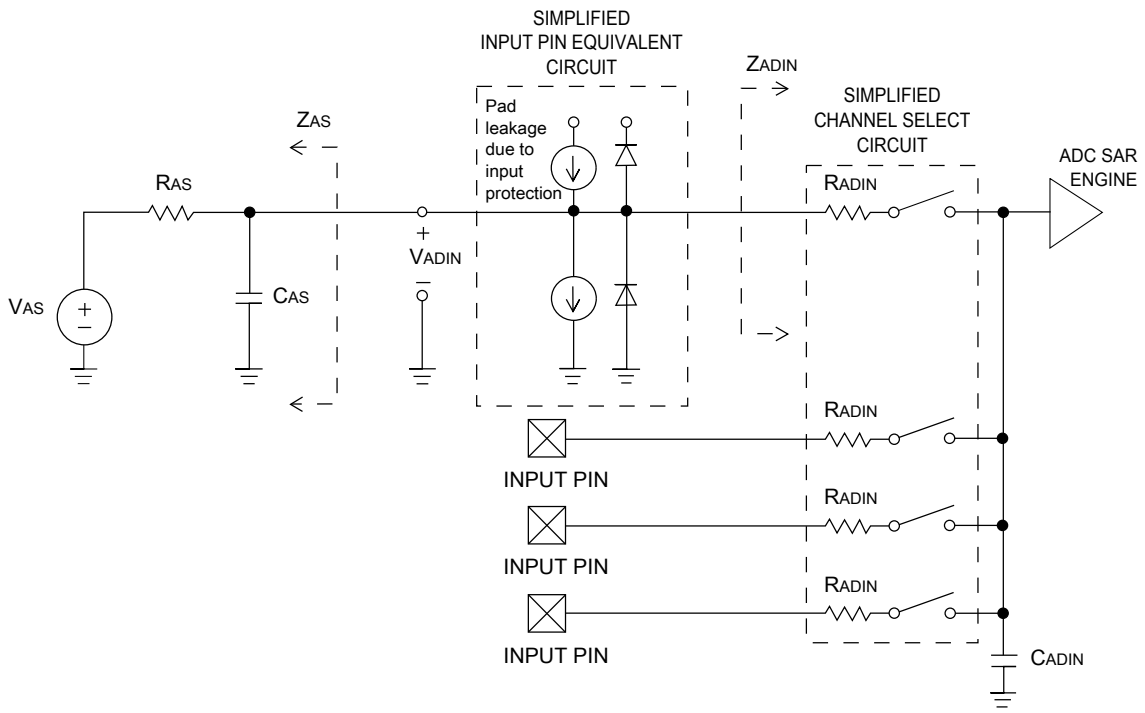

Figure 3. ADC input impedance equivalency diagram

3.4.1.2 16-bit ADC electrical characteristics

Table 29. 16-bit ADC characteristics ($V_{REFH} = V_{DDA}$, $V_{REFL} = V_{SSA}$)

Symbol	Description	Conditions[1]	Min.	Typ.[2]	Max.	Unit	Notes
I_{DDA_ADC}	Supply current		0.215	—	1.7	mA	3
f_{ADACK}	ADC asynchronous clock source	• ADLPC = 1, ADHSC = 0 • ADLPC = 1, ADHSC = 1 • ADLPC = 0, ADHSC = 0 • ADLPC = 0, ADHSC = 1	1.2 2.4 3.0 4.4	2.4 4.0 5.2 6.2	3.9 6.1 7.3 9.5	MHz MHz MHz MHz	$t_{ADACK} = 1/f_{ADACK}$
	Sample Time	See Reference Manual chapter for sample times					
TUE	Total unadjusted error	• 12-bit modes • <12-bit modes	— —	±4 ±1.4	±6.8 ±2.1	LSB[4]	5
DNL	Differential non-linearity	• 12-bit modes • <12-bit modes	— —	±0.7 ±0.2	–1.1 to +1.9 –0.3 to +0.5	LSB[4]	5
INL	Integral non-linearity	• 12-bit modes	— —	±1.0 ±0.5	–2.7 to +1.9	LSB[4]	5

Table continues on the next page...

Table 29. 16-bit ADC characteristics ($V_{REFH} = V_{DDA}$, $V_{REFL} = V_{SSA}$) (continued)

Symbol	Description	Conditions[1]	Min.	Typ.[2]	Max.	Unit	Notes
		• <12-bit modes			–0.7 to +0.5		
E_{FS}	Full-scale error	• 12-bit modes • <12-bit modes	— —	–4 –1.4	–5.4 –1.8	LSB[4]	$V_{ADIN} = V_{DDA}$[5]
E_Q	Quantization error	• 16-bit modes • 12-bit modes	— —	–1 to 0 —	— ±0.5	LSB[4]	
ENOB	Effective number of bits	16-bit single-ended mode • Avg = 32 • Avg = 4	 12.8 11.9 12.2 11.4	 14.5 13.8 13.9 13.1	 — — — —	bits bits bits bits	6
SINAD	Signal-to-noise plus distortion	See ENOB	6.02 × ENOB + 1.76			dB	
THD	Total harmonic distortion	16-bit single-ended mode • Avg = 32	 — —	 -94 -85	 — —	dB dB	7
SFDR	Spurious free dynamic range	16-bit single-ended mode • Avg = 32	 82 78	 95 90	 — — 	dB dB	7
E_{IL}	Input leakage error		$I_{In} \times R_{AS}$			mV	I_{In} = leakage current (refer to the MCU's voltage and current operating ratings)
	Temp sensor slope	Across the full temperature range of the device	1.55	1.62	1.69	mV/°C	8
V_{TEMP25}	Temp sensor voltage	25 °C	706	716	726	mV	8

1. All accuracy numbers assume the ADC is calibrated with $V_{REFH} = V_{DDA}$
2. Typical values assume V_{DDA} = 3.0 V, Temp = 25 °C, f_{ADCK} = 2.0 MHz unless otherwise stated. Typical values are for reference only and are not tested in production.

3. The ADC supply current depends on the ADC conversion clock speed, conversion rate and ADC_CFG1[ADLPC] (low power). For lowest power operation, ADC_CFG1[ADLPC] must be set, the ADC_CFG2[ADHSC] bit must be clear with 1 MHz ADC conversion clock speed.
4. 1 LSB = $(V_{REFH} - V_{REFL})/2^N$
5. ADC conversion clock < 16 MHz, Max hardware averaging (AVGE = %1, AVGS = %11)
6. Input data is 100 Hz sine wave. ADC conversion clock < 12 MHz.
7. Input data is 1 kHz sine wave. ADC conversion clock < 12 MHz.
8. ADC conversion clock < 3 MHz

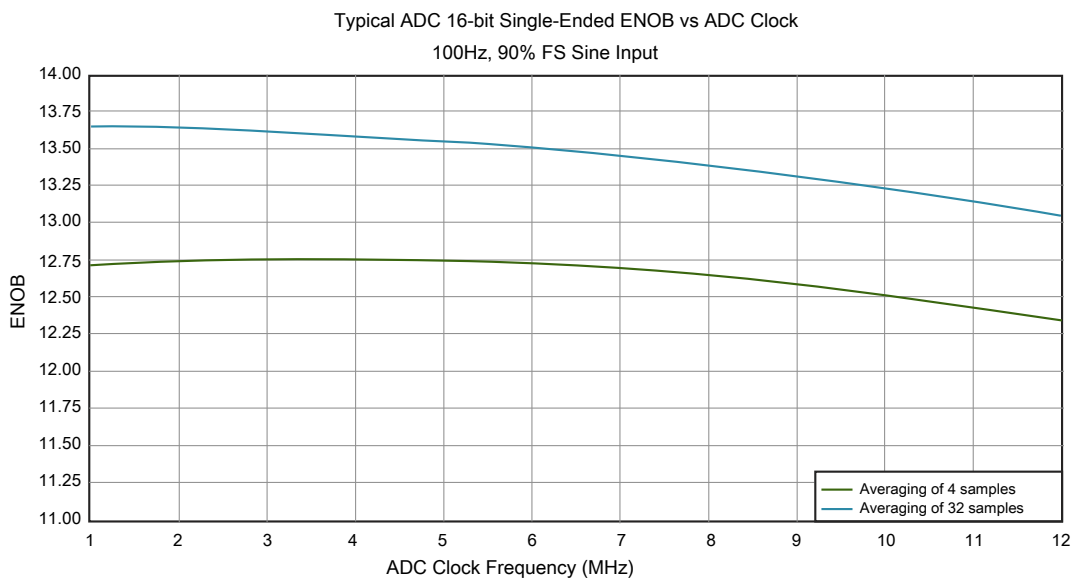

Figure 4. Typical ENOB vs. ADC_CLK for 16-bit single-ended mode

3.4.2 CMP and 6-bit DAC electrical specifications

Table 30. Comparator and 6-bit DAC electrical specifications

Symbol	Description	Min.	Typ.	Max.	Unit
V_{DD}	Supply voltage	1.71	—	3.6	V
I_{DDHS}	Supply current, High-speed mode (EN=1, PMODE=1)	—	—	200	μA
I_{DDLS}	Supply current, low-speed mode (EN=1, PMODE=0)	—	—	20	μA
V_{AIN}	Analog input voltage	$V_{SS} – 0.3$	—	V_{DD}	V
V_{AIO}	Analog input offset voltage	—	—	20	mV
V_H	Analog comparator hysteresis[1]				
	• CR0[HYSTCTR] = 00	—	5	—	mV
	• CR0[HYSTCTR] = 01	—	10	—	mV
	• CR0[HYSTCTR] = 10	—	20	—	mV
	• CR0[HYSTCTR] = 11	—	30	—	mV
V_{CMPOh}	Output high	$V_{DD} – 0.5$	—	—	V

Table continues on the next page...

Table 30. Comparator and 6-bit DAC electrical specifications (continued)

Symbol	Description	Min.	Typ.	Max.	Unit
V_{CMPOl}	Output low	—	—	0.5	V
t_{DHS}	Propagation delay, high-speed mode (EN=1, PMODE=1)	20	50	200	ns
t_{DLS}	Propagation delay, low-speed mode (EN=1, PMODE=0)	80	250	600	ns
	Analog comparator initialization delay[2]	—	—	40	μs
I_{DAC6b}	6-bit DAC current adder (enabled)	—	7	—	μA
INL	6-bit DAC integral non-linearity	–0.5	—	0.5	LSB[3]
DNL	6-bit DAC differential non-linearity	–0.3	—	0.3	LSB

1. Typical hysteresis is measured with input voltage range limited to 0.6 to V_{DD}–0.6 V.
2. Comparator initialization delay is defined as the time between software writes to change control inputs (Writes to CMP_DACCR[DACEN], CMP_DACCR[VRSEL], CMP_DACCR[VOSEL], CMP_MUXCR[PSEL], and CMP_MUXCR[MSEL]) and the comparator output settling to a stable level.
3. 1 LSB = $V_{reference}/64$

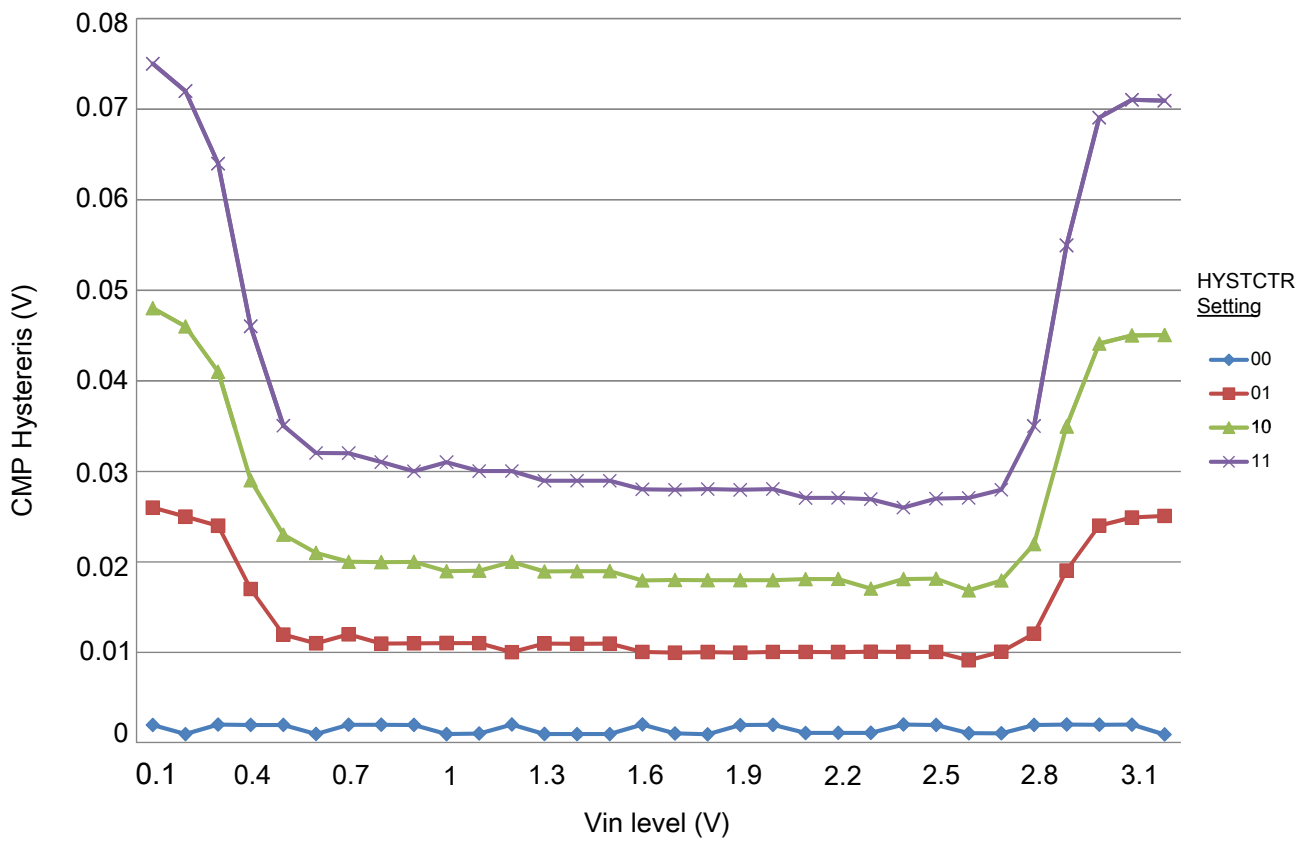

Figure 5. Typical hysteresis vs. Vin level (VDD = 3.3 V, PMODE = 0)

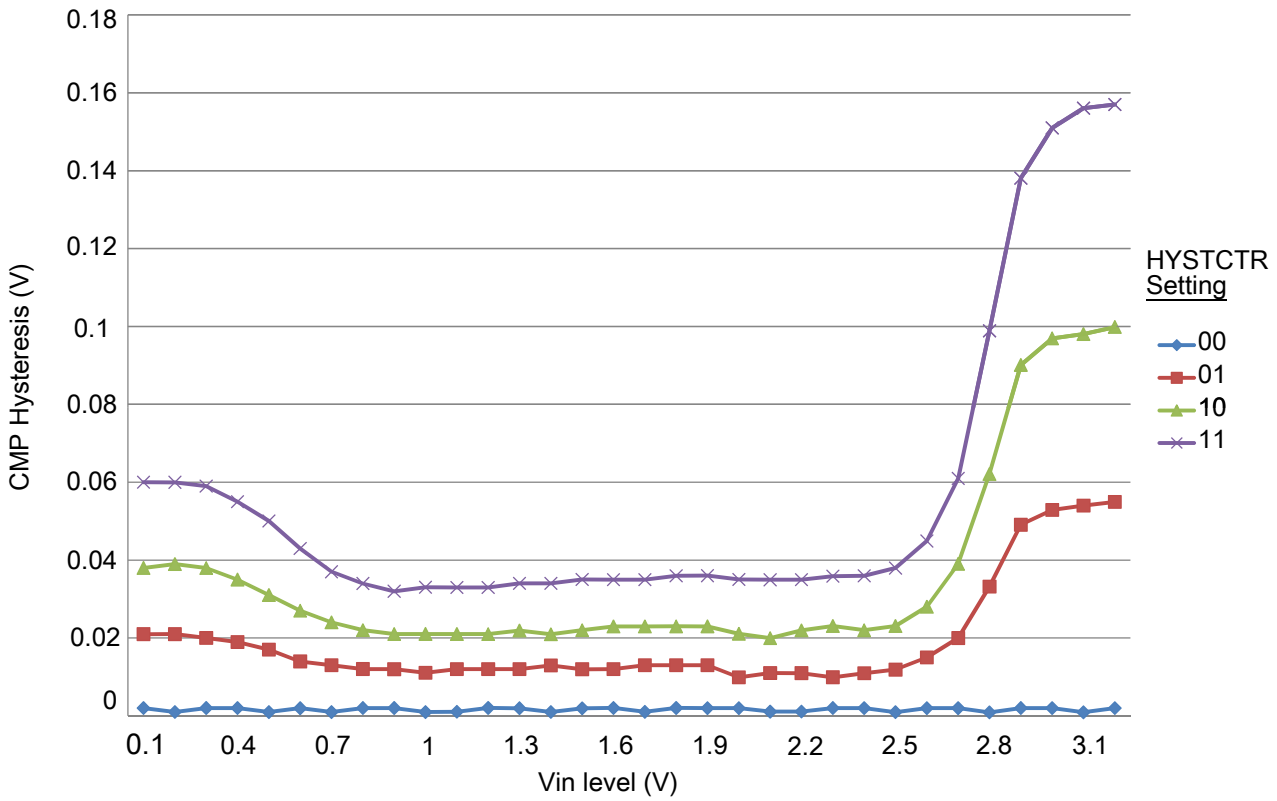

Figure 6. Typical hysteresis vs. Vin level (VDD = 3.3 V, PMODE = 1)

3.4.3 Voltage reference electrical specifications

Table 31. 1.2 VREF full-range operating requirements

Symbol	Description	Min.	Max.	Unit	Notes
V_{DDA}	Supply voltage	2.7 [1]	3.6	V	
T_A	Temperature	–40	105	°C	
C_L	Output load capacitance	100		nF	2, 3

1. AFE is enabled.
2. C_L must be connected between VREFH and VREFL.
3. The load capacitance should not exceed ±25% of the nominal specified C_L value over the operating temperature range of the device.

Table 32. VREF full-range operating behaviors

Symbol	Description	Min.	Typ.	Max.	Unit	Notes
VREFH	Voltage reference output with factory trim at nominal V_{DDA} and temperature = 25 °C	1.1915	1.195	1.2027	V	

Table continues on the next page...

Table 32. VREF full-range operating behaviors (continued)

Symbol	Description	Min.	Typ.	Max.	Unit	Notes
VREFH	Voltage reference output with — factory trim	1.1584	—	1.2376	V	
VREFH	Voltage reference output — user trim	1.178	—	1.202	V	
VREFL	Voltage reference output	0.38	0.4	0.42	V	
V_{step}	Voltage reference trim step	—	0.5	—	mV	
V_{tdrift}	Temperature drift when ICOMP = 0 across full temperature range	—	18	—	ppm/ºC	
	Temperature drift when ICOMP = 1 across full temperature range	—	6	—	ppm/°C	1
	Temperature drift when ICOMP = 1 across -40 ºC to 70 ºC	—	5	—	ppm/°C	1, 2
	Temperature drift when ICOMP = 1 across 0 ºC to 50 ºC	—	3	—	ppm/°C	1, 2
Ac	Aging coefficient	—	—	400	uV/yr	
I_{bg}	Bandgap only current	—	—	80	μA	2
I_{lp}	Low-power buffer current	—	—	0.19	mA	2
I_{hp}	High-power buffer current	—	—	0.5	mA	2
I_{LOAD}	VREF buffer current	–2	—	2	mA	3, 4
ΔV_{LOAD}	Load regulation • current = ± 1.0 mA	— —	 200	 —	μV	2, 5
T_{stup}	Buffer startup time	—	—	20	ms	
V_{vdrift}	Voltage drift (VREFHmax -VREFHmin across the full voltage range)	—	0.5	—	mV	2

1. ICOMP=1 is recommended to get best temperature drift. CHOPEN bit = 1 is also recommended.
2. See the chip's Reference Manual for the appropriate settings of VREF Status and Control register.
3. 2 mA I_{LOAD} is only achievable for above 2.7 V V_{DDA} condition.
4. See the chip's Reference Manual for the appropriate settings of SIM Miscellaneous Control Register.
5. Load regulation voltage is the difference between VREFH voltage with no load vs. voltage with defined load.

NOTE

Temperature drift per degree is ((VREFHmax-VREFHmin)/ (temperature range)/VREFHmin) in ppm/ºC

3.4.4 AFE electrical specifications

3.4.4.1 ΣΔ ADC + PGA specifications

Table 33. ΣΔ ADC + PGA specifications

Symbol	Description	Conditions	Min	Typ[1]	Max	Unit	Notes
f_{Nyq}	Input bandwidth	Normal Mode	1.5	1.5	1.5	kHz	
		Low-Power Mode	1.5	1.5	1.5		
V_{CM}	Input Common Mode Reference		0		0.8	V	
VIN_{diff}	Differential input range	Gain = 1 (PGA ON/OFF)[2]		± 500		mV	
		Gain = 2		± 250		mV	
		Gain = 4		± 125		mV	
		Gain = 8		± 62		mV	
		Gain = 16		± 31		mV	
		Gain = 32		± 15		mV	
SNR	Signal to Noise Ratio	Normal Mode				dB	
		• f_{IN}=50 Hz; gain=01, common mode=0V, V_{pp}=1000mV (full range diff.)	90	92			
		• f_{IN}=50 Hz; gain=02, common mode=0V, V_{pp}= 500mV (differential ended)	88	90			
		• f_{IN}=50 Hz; gain=04, common mode=0V, V_{pp}= 250mV (differential ended)	82	86			
		• f_{IN}=50 Hz; gain=08, common mode=0V, V_{pp}= 125mV (differential ended)	76	82			
		• f_{IN}=50 Hz; gain=16, common mode=0V, V_{pp}= 62mV (differential ended)	70	78			
		• f_{IN}=50 Hz; gain=32, common mode=0V, V_{pp}= 31mV (differential ended)	64	74			
		Low-Power Mode				dB	
		• f_{IN}=50 Hz; gain=01, common mode=0V, V_{pp}=1000mV (full range diff.)	82	82			
		• f_{IN}=50 Hz; gain=02, common mode=0V, V_{pp}= 500mV (differential ended)	76	78			
		• f_{IN}=50 Hz; gain=04, common mode=0V, V_{pp}= 250mV (differential ended)	70	74			
		• f_{IN}=50 Hz; gain=08, common mode=0V, V_{pp}= 125mV (differential ended)	64	70			
			58	66			

Table continues on the next page...

Table 33. ΣΔ ADC + PGA specifications (continued)

Symbol	Description	Conditions	Min	Typ[1]	Max	Unit	Notes
		• f_{IN}=50 Hz; gain=16, common mode=0V, V_{pp}= 62mV (differential ended) • f_{IN}=50 Hz; gain=32, common mode=0V, V_{pp}= 31mV (differential ended)	52	62			
SINAD	Signal-to-Noise + Distortion Ratio	Normal Mode • f_{IN}=50 Hz; gain=01, common mode=0V, V_{pp}=500mV (differential ended)		78		dB	
		Low-Power Mode • f_{IN}=50 Hz; gain=01, common mode=0V, V_{pp}=500mV (differential ended)		74		dB	
CMMR	Common Mode Rejection Ratio	• f_{IN}=50 Hz; gain=01, common mode=0V, Vid=100 mV • f_{IN}=50 Hz; gain=32, common mode=0V, V_{id}=100 mV		70 70		dB	
E_{offset}	Offset Error	Gain=01, V_{pp}=1000 mV (full range diff.)			± 5	mV	
$\Delta Offset_{Temp}$	Offset Temperature Drift [3]	Gain=01, V_{pp}=1000 mV (full range diff.)			± 25	ppm/°C	
$\Delta Gain_{Temp}$	Gain Temperature Drift - Gain error caused by temperature drifts [4]	• Gain=01, V_{pp}=500 mV (differential ended) • Gain=32, V_{pp}=15 mV (differential ended)			± 75	ppm/°C	
$PSRR_{AC}$	AC Power Supply Rejection Ratio	Gain=01, VCC = 3 V ± 100 mV, f_{IN} = 50 Hz		60		dB	
XT	Crosstalk (with the input of the affected channel grounded)	Gain=01, V_{id} = 500 mV, f_{IN} = 50 Hz			-100	dB	
f_{MCLK}	Modulator Clock Frequency Range	Normal Mode Low-Power Mode	0.03 0.03		6.5 1.6	MHz	
I_{DDA_PGA}	Current consumption by PGA (each channel)	Normal Mode (f_{MCLK} = 6.144 MHz, OSR= 2048) Low-Power Mode (f_{MCLK} = 0.768 MHz, OSR= 256)			2.6 0	mA	5
I_{DDA_ADC}	Current Consumption by ADC (each channel)	Normal Mode (f_{MCLK} = 6.144 MHz, OSR= 2048) Low-Power Mode (f_{MCLK} = 0.768 MHz, OSR= 256)			1.4 0.5	mA	

1. Typical values assume V_{DDA} = 3.0 V, Temp = 25°C, f_{MCLK} = 6.144 MHz, OSR = 2048 for Normal mode and f_{MCLK} = 768 kHz, OSR = 256 for Low-Power Mode unless otherwise stated. Typical values are for reference only and are not tested in production.
2. The full-scale input range in single-ended mode is $0.5V_{pp}$.

3. Represents combined offset temperature drift of the PGA, SD ADC and Internal 1.2 VREF blocks; Defined by shorting both differential inputs to ground.
4. Represents combined gain temperature drift of the PGA, SD ADC and Internal 1.2 VREF blocks.
5. PGA is disabled in low-power modes.

3.4.4.2 ΣΔ ADC Standalone specifications

Table 34. ΣΔ ADC standalone specifications

Symbol	Description	Conditions	Min	Typ[1]	Max	Unit	Notes
f_{Nyq}	Input bandwidth	Normal Mode Low-Power Mode	1.5 1.5	1.5 1.5	1.5 1.5	kHz	
V_{CM}	Input Common Mode Reference		0		0.8	V	
VIN_{diff}	Input range	Differential		± 500		mV	
		Single Ended		± 250		mV	
SNR	Signal to Noise Ratio	Normal Mode • f_{IN}=50 Hz; common mode=0 V, V_{pp}= 500 mV (differential ended) • f_{IN}=50 Hz; common mode=0 V, V_{pp}= 500 mV (full range se.) Low-Power Mode • f_{IN}=50 Hz; common mode=0 V, V_{pp}=500 mV (diff.) • f_{IN}=50 Hz; common mode=0 V, V_{pp}=500 mV (full range se.)	88 76	90 78		dB	
$\Delta Gain_{Temp}$	Gain Temperate Drift - Gain error caused by temperature drifts [2]	• Gain bypassed V_{pp} = 500 mV (differential) • PGA bypassed V_{pp} = 500 mV (differential), V_{CM} = 0 V			55	ppm/°C	
$\Delta Offset_{Temp}$	Offset Temperate Drift - Offset error caused by temperature drifts [3]	• Gain bypassed Vpp = 500 mV (differential), V_{CM} = 0 V			30	ppm/°C	
SINAD	Signal-to-Noise + Distortion Ratio	Normal Mode • f_{IN}=50 Hz; common mode=0 V, V_{pp}= 500 mV (diff.) • f_{IN}=50 Hz; common mode=0 V, V_{pp}= 500 mV (full range se.) Low-Power Mode • f_{IN}=50 Hz; common mode=0 V, V_{pp}=500 mV (diff.) • f_{IN}=50 Hz; common mode=0 V, V_{pp}=500 mV (full range se.)		80 74		dB	
CMMR	Common Mode Rejection Ratio	• f_{IN}=50 Hz; common mode=0 V, V_{id}=100 mV		90		dB	

Table continues on the next page...

Table 34. ΣΔ ADC standalone specifications (continued)

Symbol	Description	Conditions	Min	Typ[1]	Max	Unit	Notes
$PSRR_{AC}$	AC Power Supply Rejection Ratio	Gain=01, VCC = 3 V ± 100 mV, f_{IN} = 50 Hz		60		dB	
XT	Crosstalk	Gain=01, V_{id} = 500 mV, f_{IN} = 50 Hz			-100	dB	
f_{MCLK}	Modulator Clock Frequency Range	Normal Mode Low-Power Mode	0.03 0.03		6.5 1.6	MHz	
I_{DDA_ADC}	Current Consumption by ADC (each channel)	Normal Mode (f_{MCLK} = 6.144 MHz, OSR= 2048) Low-Power Mode (f_{MCLK} = 0.768 MHz, OSR= 256)			1.4 0.5	mA	

1. Typical values assume V_{DDA} = 3.0 V, Temp = 25°C, f_{MCLK} = 6.144 MHz, OSR = 2048 for Normal mode and f_{MCLK} = 768 kHz, OSR = 256 for Low-Power Mode unless otherwise stated. Typical values are for reference only and are not tested in production.
2. Represent combined gain temperature drift of the SD ADC, and Internal 1.2 VREF blocks.
3. Represent combined offset temperature drift of the SD ADC, and Internal 1.2 VREF blocks; Defined by shorting both differential inputs to ground.

3.4.4.3 External modulator interface

The external modulator interface on this device comprises of a Clock signal and 1-bit data signal. Depending on the modulator device being used the interface works as follows:

- Clock supplied to external modulator which drives data on rising edge and the KM device captures it on falling edge or next rising edge.
- Clock and data are supplied by external modulator and KM device can sample it on falling edge or next rising edge.

Depending on control bit in AFE, the sampling edge is changed.

3.5 Timers

See General switching specifications.

3.6 Communication interfaces

3.6.1 I2C switching specifications

See General switching specifications.

3.6.2 UART switching specifications

See General switching specifications.

3.6.3 SPI switching specifications

The Serial Peripheral Interface (SPI) provides a synchronous serial bus with master and slave operations. Many of the transfer attributes are programmable. The following tables provide timing characteristics for classic SPI timing modes. See the SPI chapter of the chip's Reference Manual for information about the modified transfer formats used for communicating with slower peripheral devices.

All timing is shown with respect to 20% V_{DD} and 80% V_{DD} thresholds, unless noted, as well as input signal transitions of 3 ns and a 30 pF maximum load on all SPI pins.

Table 35. SPI master mode timing on slew rate disabled pads

Num.	Symbol	Description	Min.	Max.	Unit	Note
1	f_{op}	Frequency of operation	$f_{periph}/2048$	$f_{periph}/2$	Hz	1
2	t_{SPSCK}	SPSCK period	2 x t_{periph}	2048 x t_{periph}	ns	2
3	t_{Lead}	Enable lead time	1/2	—	t_{SPSCK}	—
4	t_{Lag}	Enable lag time	1/2	—	t_{SPSCK}	—
5	t_{WSPSCK}	Clock (SPSCK) high or low time	t_{periph} - 30	1024 x t_{periph}	ns	—
6	t_{SU}	Data setup time (inputs)	18	—	ns	—
7	t_{HI}	Data hold time (inputs)	0	—	ns	—
8	t_v	Data valid (after SPSCK edge)	—	15	ns	—
9	t_{HO}	Data hold time (outputs)	0	—	ns	—
10	t_{RI}	Rise time input	—	t_{periph} - 25	ns	—
	t_{FI}	Fall time input				
11	t_{RO}	Rise time output	—	25	ns	—
	t_{FO}	Fall time output				

1. For both SPI0 and SPI1, f_{periph} is the system clock (f_{SYS}).
2. $t_{periph} = 1/f_{periph}$

Table 36. SPI master mode timing on slew rate enabled pads

Num.	Symbol	Description	Min.	Max.	Unit	Note
1	f_{op}	Frequency of operation	$f_{periph}/2048$	$f_{periph}/2$	Hz	1

Table continues on the next page...

Table 36. SPI master mode timing on slew rate enabled pads (continued)

Num.	Symbol	Description	Min.	Max.	Unit	Note
2	t_{SPSCK}	SPSCK period	2 x t_{periph}	2048 x t_{periph}	ns	2
3	t_{Lead}	Enable lead time	1/2	—	t_{SPSCK}	—
4	t_{Lag}	Enable lag time	1/2	—	t_{SPSCK}	—
5	t_{WSPSCK}	Clock (SPSCK) high or low time	t_{periph} - 30	1024 x t_{periph}	ns	—
6	t_{SU}	Data setup time (inputs)	96	—	ns	—
7	t_{HI}	Data hold time (inputs)	0	—	ns	—
8	t_v	Data valid (after SPSCK edge)	—	52	ns	—
9	t_{HO}	Data hold time (outputs)	0	—	ns	—
10	t_{RI}	Rise time input	—	t_{periph} - 25	ns	—
	t_{FI}	Fall time input				
11	t_{RO}	Rise time output	—	36	ns	—
	t_{FO}	Fall time output				

1. For both SPI0 and SPI1, f_{periph} is the system clock (f_{SYS}).
2. $t_{periph} = 1/f_{periph}$

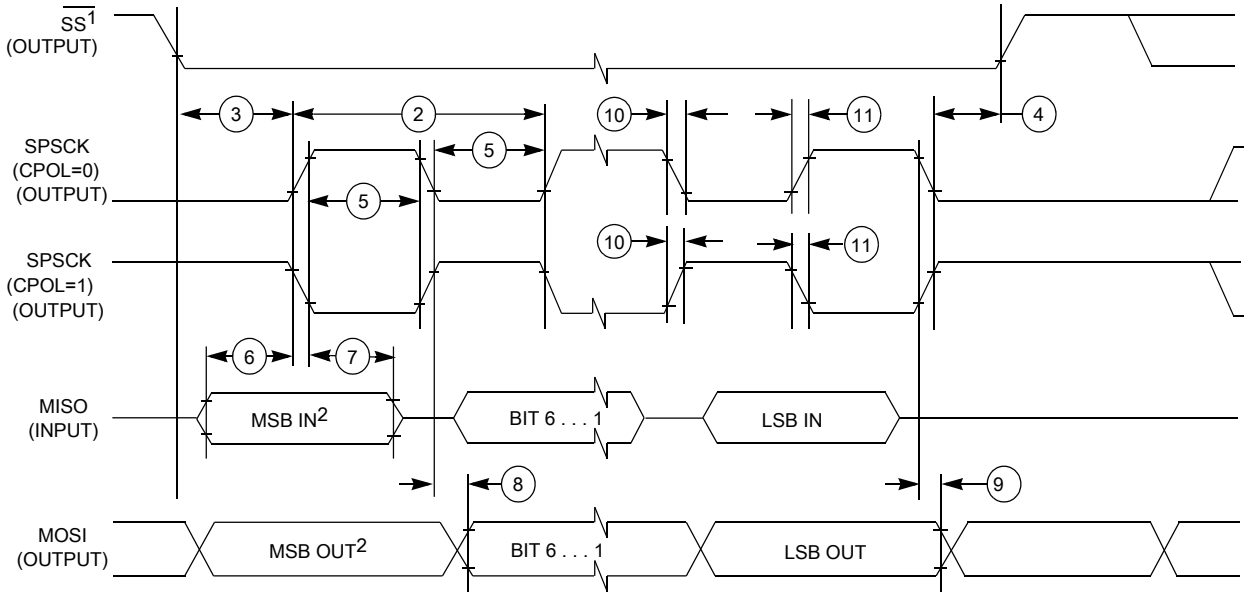

1. If configured as an output.
2. LSBF = 0. For LSBF = 1, bit order is LSB, bit 1, ..., bit 6, MSB.

Figure 7. SPI master mode timing (CPHA = 0)

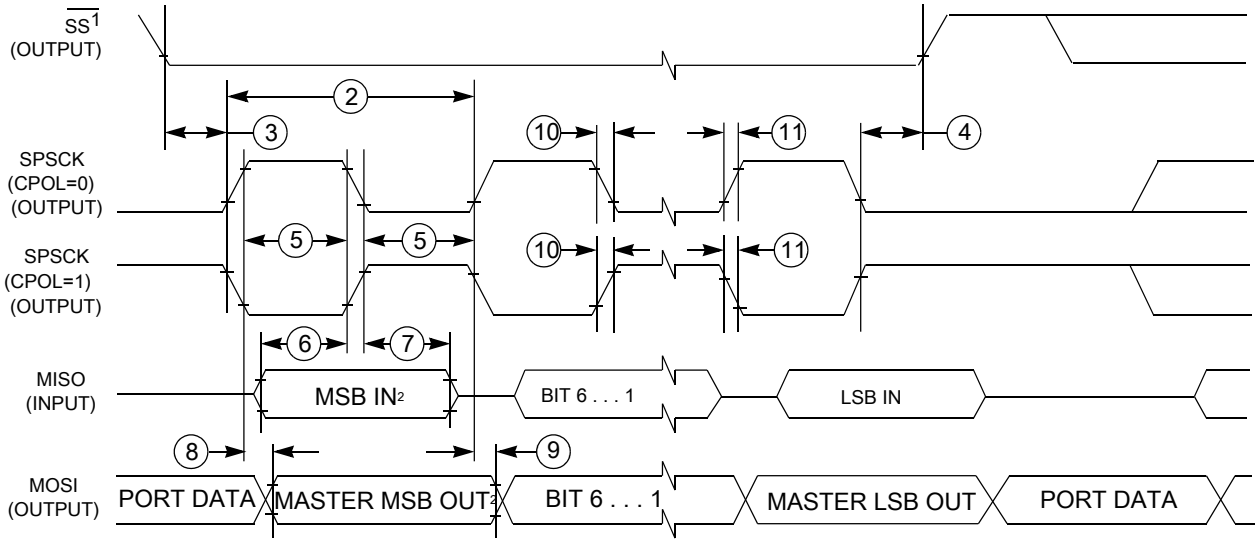

1.If configured as output

2. LSBF = 0. For LSBF = 1, bit order is LSB, bit 1, ..., bit 6, MSB.

Figure 8. SPI master mode timing (CPHA = 1)

Table 37. SPI slave mode timing on slew rate disabled pads

Num.	Symbol	Description	Min.	Max.	Unit	Note
1	f_{op}	Frequency of operation	0	$f_{periph}/4$	Hz	1
2	t_{SPSCK}	SPSCK period	4 x t_{periph}	—	ns	2
3	t_{Lead}	Enable lead time	1	—	t_{periph}	—
4	t_{Lag}	Enable lag time	1	—	t_{periph}	—
5	t_{WSPSCK}	Clock (SPSCK) high or low time	t_{periph} - 30	—	ns	—
6	t_{SU}	Data setup time (inputs)	2.5	—	ns	—
7	t_{HI}	Data hold time (inputs)	3.5	—	ns	—
8	t_a	Slave access time	—	t_{periph}	ns	3
9	t_{dis}	Slave MISO disable time	—	t_{periph}	ns	4
10	t_v	Data valid (after SPSCK edge)	—	31	ns	—
11	t_{HO}	Data hold time (outputs)	0	—	ns	—
12	t_{RI}	Rise time input	—	t_{periph} - 25	ns	—
	t_{FI}	Fall time input				
13	t_{RO}	Rise time output	—	25	ns	—
	t_{FO}	Fall time output				

1. For both SPI0 and SPI1, f_{periph} is the system clock (f_{SYS}).
2. $t_{periph} = 1/f_{periph}$
3. Time to data active from high-impedance state
4. Hold time to high-impedance state

Table 38. SPI slave mode timing on slew rate enabled pads

Num.	Symbol	Description	Min.	Max.	Unit	Note
1	f_{op}	Frequency of operation	0	$f_{periph}/4$	Hz	1
2	t_{SPSCK}	SPSCK period	4 x t_{periph}	—	ns	2
3	t_{Lead}	Enable lead time	1	—	t_{periph}	—
4	t_{Lag}	Enable lag time	1	—	t_{periph}	—
5	t_{WSPSCK}	Clock (SPSCK) high or low time	t_{periph} - 30	—	ns	—
6	t_{SU}	Data setup time (inputs)	2	—	ns	—
7	t_{HI}	Data hold time (inputs)	7	—	ns	—
8	t_a	Slave access time	—	t_{periph}	ns	3
9	t_{dis}	Slave MISO disable time	—	t_{periph}	ns	4
10	t_v	Data valid (after SPSCK edge)	—	122	ns	—
11	t_{HO}	Data hold time (outputs)	0	—	ns	—
12	t_{RI}	Rise time input	—	t_{periph} - 25	ns	—
	t_{FI}	Fall time input				
13	t_{RO}	Rise time output	—	36	ns	—
	t_{FO}	Fall time output				

1. For both SPI0 and SPI1, f_{periph} is the system clock (f_{SYS}).
2. $t_{periph} = 1/f_{periph}$
3. Time to data active from high-impedance state
4. Hold time to high-impedance state

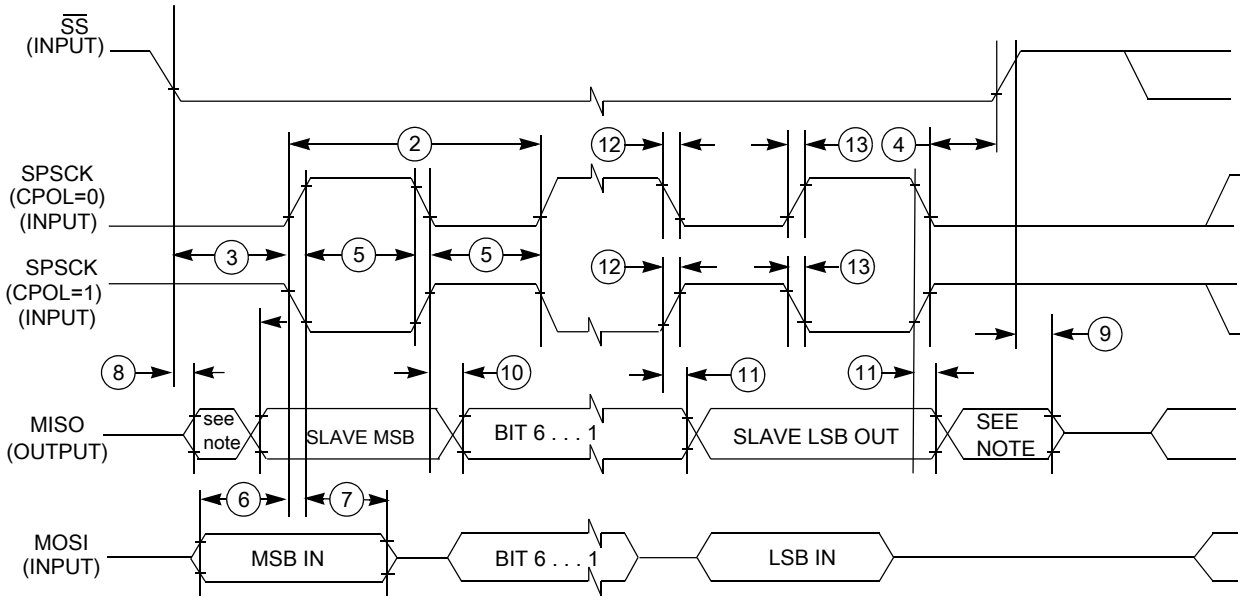

NOTE: Not defined

Figure 9. SPI slave mode timing (CPHA = 0)

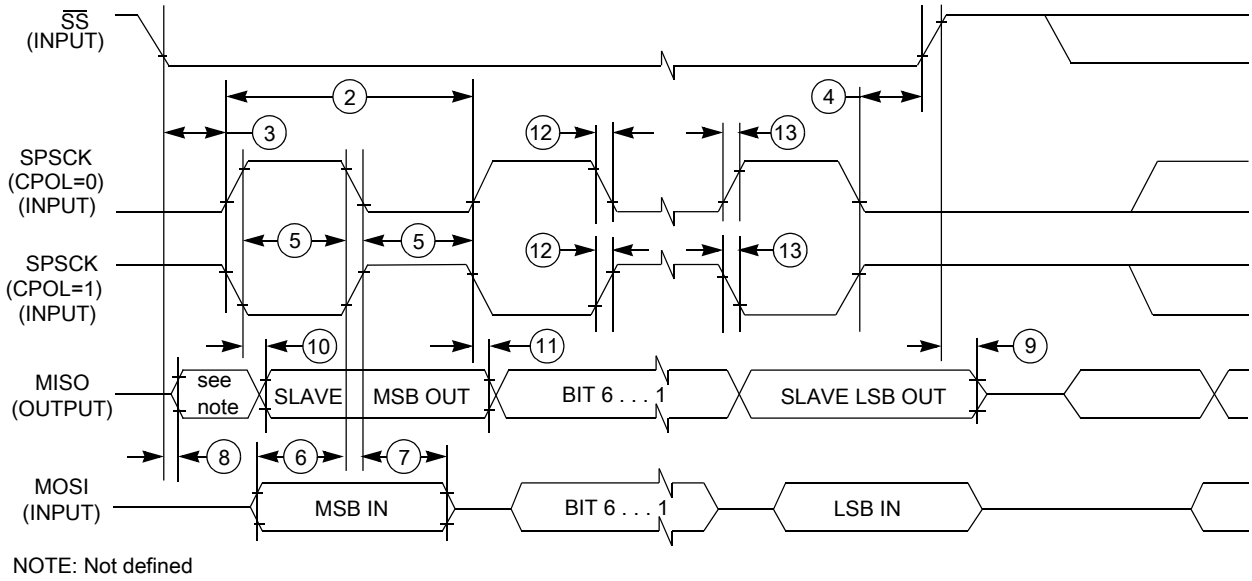

Figure 10. SPI slave mode timing (CPHA = 1)

3.7 Human-Machine Interfaces (HMI)

3.7.1 LCD electrical characteristics

Table 39. LCD electricals

Symbol	Description	Min.	Typ.	Max.	Unit	Notes
f_{Frame}	LCD frame frequency					
	• GCR[FFR]=0	23.3	—	73.1	Hz	
	• GCR[FFR]=1	46.6	—	146.2	Hz	
C_{LCD}	LCD charge pump capacitance — nominal value	—	100	—	nF	
C_{BYLCD}	LCD bypass capacitance — nominal value	—	100	—	nF	1
C_{Glass}	LCD glass capacitance	—	2000	8000	pF	2
V_{IREG}	V_{IREG}				V	3
	• RVTRIM=0000	—	0.91	—		
	• RVTRIM=1000	—	0.92	—		
	• RVTRIM=0100	—	0.93	—		
	• RVTRIM=1100	—	0.94	—		
	• RVTRIM=0010	—	0.96	—		
	• RVTRIM=1010	—	0.97	—		
	• RVTRIM=0110	—	0.98	—		

Table continues on the next page...

Table 39. LCD electricals (continued)

Symbol	Description	Min.	Typ.	Max.	Unit	Notes
	• RVTRIM=1110	—	0.99	—		
	• RVTRIM=0001	—	1.01	—		
	• RVTRIM=1001	—	1.02	—		
	• RVTRIM=0101	—	1.03	—		
	• RVTRIM=1101	—	1.05	—		
	• RVTRIM=0011	—	1.06	—		
	• RVTRIM=1011	—	1.07	—		
	• RVTRIM=0111	—	1.08	—		
	• RVTRIM=1111	—	1.09	—		
Δ_{RTRIM}	V_{IREG} TRIM resolution	—	—	3.0	% V_{IREG}	
I_{VIREG}	V_{IREG} current adder — RVEN = 1	—	1	—	μA	
I_{RBIAS}	RBIAS current adder					
	• LADJ = 10 or 11 — High load (LCD glass capacitance ≤ 8000 pF)	—	10	—	μA	
	• LADJ = 00 or 01 — Low load (LCD glass capacitance ≤ 2000 pF)	—	1	—	μA	
R_{RBIAS}	RBIAS resistor values					
	• LADJ = 10 or 11 — High load (LCD glass capacitance ≤ 8000 pF)	—	0.28	—	MΩ	
	• LADJ = 00 or 01 — Low load (LCD glass capacitance ≤ 2000 pF)	—	2.98	—	MΩ	
VLL1	VLL1 voltage	—	—	V_{IREG}	V	4
VLL2	VLL2 voltage	—	—	2 x V_{IREG}	V	4
VLL3	VLL3 voltage	—	—	3 x V_{IREG}	V	4
VLL1	VLL1 voltage	—	—	V_{DDA} / 3	V	5
VLL2	VLL2 voltage	—	—	V_{DDA} / 1.5	V	5
VLL3	VLL3 voltage	—	—	V_{DDA}	V	5

1. The actual value used could vary with tolerance.
2. For highest glass capacitance values, LCD_GCR[LADJ] should be configured as specified in the LCD Controller chapter within the device's reference manual.
3. V_{IREG} maximum should never be externally driven to any level other than V_{DD} - 0.15 V
4. VLL1, VLL2 and VLL3 are a function of V_{IREG} only when the regulator is enabled (GCR[RVEN]=1) and the charge pump is enabled (GCR[CPSEL]=1).
5. VLL1, VLL2 and VLL3 are a function of V_{DDA} only under either of the following conditions:
   - The charge pump is enabled (GCR[CPSEL]=1), the regulator is disabled (GCR[RVEN]=0), and VLL3 = V_{DDA} through the internal power switch (GCR[VSUPPLY]=0).
   - The resistor bias string is enabled (GCR[CPSEL]=0), the regulator is disabled (GCR[RVEN]=0), and VLL3 is connected to V_{DDA} externally (GCR[VSUPPLY]=1).

4 Dimensions

4.1 Obtaining package dimensions

Package dimensions are provided in package drawings.

To find a package drawing, go to freescale.com and perform a keyword search for the drawing's document number:

If you want the drawing for this package	Then use this document number
100-pin LQFP	98ASS23308W
144-pin LQFP	98ASS23177W

5 Pinout

5.1 KM3x_256 Signal multiplexing and pin assignments

144 QFP	100 QFP	Pin Name	DEFAULT	ALT0	ALT1	ALT2	ALT3	ALT4	ALT5	ALT6	ALT7
1	—	NC	NC								
2	—	NC	NC								
3	—	PTI5	Disabled	LCD_P45	PTI5						LCD_P45
4	1	PTA0/ LLWU_P16	Disabled	LCD_P23	PTA0/ LLWU_P16						LCD_P23
5	2	PTA1	Disabled	LCD_P24	PTA1						LCD_P24
6	—	PTI6	Disabled	LCD_P46	PTI6	UART2_RX					LCD_P46
7	—	PTI7	Disabled	LCD_P47	PTI7	UART2_TX					LCD_P47
8	3	PTA2	Disabled	LCD_P25	PTA2						LCD_P25
9	4	PTA3	Disabled	LCD_P26	PTA3						LCD_P26
10	5	PTA4/ LLWU_P15	NMI_b	LCD_P27	PTA4/ LLWU_P15					LCD_P27	NMI_b
11	6	PTA5	Disabled	LCD_P28	PTA5	CMP0_OUT					LCD_P28
12	7	PTA6/ LLWU_P14	Disabled	LCD_P29	PTA6/ LLWU_P14	XBAR_IN0					LCD_P29
13	8	PTA7	Disabled	LCD_P30	PTA7	XBAR_OUT0					LCD_P30
14	—	PTJ0	Disabled	LCD_P48	PTJ0	I2C1_SDA					LCD_P48
15	—	PTJ1	Disabled	LCD_P49	PTJ1	I2C1_SCL					LCD_P49

144 QFP	100 QFP	Pin Name	DEFAULT	ALT0	ALT1	ALT2	ALT3	ALT4	ALT5	ALT6	ALT7
16	9	PTB0	Disabled	LCD_P31	PTB0						LCD_P31
17	—	PTJ2	Disabled	LCD_P50	PTJ2						LCD_P50
18	10	VDD	VDD	VDD							
19	11	VSS	VSS	VSS							
20	12	PTB1/ LLWU_P17	Disabled	LCD_P32	PTB1/ LLWU_P17						LCD_P32
21	13	PTB2	Disabled	LCD_P33	PTB2						LCD_P33
22	14	PTB3	Disabled	LCD_P34	PTB3						LCD_P34
23	15	PTB4	Disabled	LCD_P35	PTB4						LCD_P35
24	16	PTB5	Disabled	LCD_P36	PTB5						LCD_P36
25	17	PTB6	Disabled	LCD_P37/ CMP1_IN0	PTB6						LCD_P37
26	18	PTB7	Disabled	LCD_P38	PTB7	AFE_CLK					LCD_P38
27	19	PTC0	Disabled	LCD_P39	PTC0	UART3_RTS_ b	XBAR_IN1	PDB0_EXTRG			LCD_P39
28	20	PTC1	Disabled	LCD_P40/ CMP1_IN1	PTC1	UART3_CTS_ b					LCD_P40
29	21	PTC2	Disabled	LCD_P41	PTC2	UART3_TX	XBAR_OUT1				LCD_P41
30	22	PTC3/ LLWU_P13	Disabled	LCD_P42/ CMP0_IN3	PTC3/ LLWU_P13	UART3_RX					LCD_P42
31	23	PTC4	Disabled	LCD_P43	PTC4						LCD_P43
32	24	VBAT	VBAT	VBAT							
33	25	XTAL32	XTAL32	XTAL32							
34	26	EXTAL32	EXTAL32	EXTAL32							
35	—	NC	NC								
36	—	NC	NC								
37	—	NC	NC								
38	—	NC	NC								
39	27	VSS	VSS	VSS							
40	28	TAMPER2	TAMPER2	TAMPER2							
41	29	TAMPER1	TAMPER1	TAMPER1							
42	30	TAMPER0	TAMPER0	TAMPER0							
43	31	AFE_VDDA	AFE_VDDA	AFE_VDDA							
44	32	AFE_VSSA	AFE_VSSA	AFE_VSSA							
45	33	AFE_SDADP0	AFE_SDADP0	AFE_SDADP0							
46	34	AFE_SDADM0	AFE_SDADM0	AFE_SDADM0							
47	35	AFE_SDADP1	AFE_SDADP1	AFE_SDADP1							
48	36	AFE_SDADM1	AFE_SDADM1	AFE_SDADM1							
49	37	VREFH	VREFH	VREFH							
50	38	VREFL	VREFL	VREFL							

144 QFP	100 QFP	Pin Name	DEFAULT	ALT0	ALT1	ALT2	ALT3	ALT4	ALT5	ALT6	ALT7
51	39	AFE_ SDADP2/ CMP1_IN2	AFE_ SDADP2/ CMP1_IN2	AFE_ SDADP2/ CMP1_IN2							
52	40	AFE_ SDADM2/ CMP1_IN3	AFE_ SDADM2/ CMP1_IN3	AFE_ SDADM2/ CMP1_IN3							
53	41	VREF	VREF	VREF							
54	42	AFE_ SDADP3/ CMP1_IN4	AFE_ SDADP3/ CMP1_IN4	AFE_ SDADP3/ CMP1_IN4							
55	43	AFE_ SDADM3/ CMP1_IN5	AFE_ SDADM3/ CMP1_IN5	AFE_ SDADM3/ CMP1_IN5							
56	—	NC	NC								
57	—	NC	NC								
58	44	PTC5/ LLWU_P12	Disabled	ADC0_SE0/ CMP2_IN0	PTC5/ LLWU_P12	UART0_RTS_ b					
59	45	PTC6	Disabled	ADC0_SE1/ CMP2_IN1	PTC6	UART0_CTS_ b	QTMR0_ TMR1	PDB0_EXTRG			
60	46	PTC7	Disabled	ADC0_SE2/ CMP2_IN2	PTC7	UART0_TX	XBAR_OUT2				
61	47	PTD0/ LLWU_P11	Disabled	CMP0_IN0	PTD0/ LLWU_P11	UART0_RX	XBAR_IN2				
62	—	PTJ3	Disabled		PTJ3	LPUART0_ RTS_b	CMP2_OUT				
63	—	PTJ4	Disabled		PTJ4	LPUART0_ CTS_b					
64	48	PTD1	Disabled		PTD1	UART1_TX	SPI0_PCS0	XBAR_OUT3	QTMR0_ TMR3		
65	49	PTD2/ LLWU_P10	Disabled	CMP0_IN1	PTD2/ LLWU_P10	UART1_RX	SPI0_SCK	XBAR_IN3			
66	—	PTJ5	Disabled		PTJ5	LPUART0_TX					
67	—	PTJ6/ LLWU_P18	Disabled		PTJ6/ LLWU_P18	LPUART0_RX					
68	—	PTJ7	Disabled		PTJ7						
69	50	PTD3	Disabled		PTD3	UART1_CTS_ b	SPI0_MOSI				
70	—	PTK0	Disabled	ADC0_SE12	PTK0						
71	—	NC	NC								
72	—	NC	NC								
73	—	NC	NC								
74	—	NC	NC								
75	—	PTK1	Disabled	ADC0_SE13	PTK1						
76	51	PTD4/ LLWU_P9	Disabled	ADC0_SE3	PTD4/ LLWU_P9	UART1_RTS_ b	SPI0_MISO				

144 QFP	100 QFP	Pin Name	DEFAULT	ALT0	ALT1	ALT2	ALT3	ALT4	ALT5	ALT6	ALT7
77	52	PTD5	Disabled	ADC0_SE4a	PTD5	LPTMR0_ ALT3	QTMR0_ TMR0	UART3_CTS_ b			
78	53	PTD6/ LLWU_P8	Disabled	ADC0_SE5a	PTD6/ LLWU_P8	LPTMR0_ ALT2	CMP1_OUT	UART3_RTS_ b			
79	54	PTD7/ LLWU_P7	Disabled	CMP0_IN4	PTD7/ LLWU_P7	I2C0_SCL	XBAR_IN4	UART3_RX			
80	55	PTE0	Disabled		PTE0	I2C0_SDA	XBAR_OUT4	UART3_TX	CLKOUT		
81	—	PTK2	Disabled	ADC0_SE14	PTK2	UART0_TX					
82	—	PTK3/ LLWU_P19	Disabled	ADC0_SE15	PTK3/ LLWU_P19	UART0_RX					
83	56	PTE1	RESET_b		PTE1						RESET_b
84	57	PTE2	EXTAL0	EXTAL0	PTE2	EWM_IN	XBAR_IN6	I2C1_SDA			
85	58	PTE3	XTAL0	XTAL0	PTE3	EWM_OUT_b	AFE_CLK	I2C1_SCL			
86	59	VSS	VSS	VSS							
87	60	VSSA	VSSA	VSSA							
88	61	VDDA	VDDA	VDDA							
89	62	VDD	VDD	VDD							
90	63	PTE4	Disabled		PTE4	LPTMR0_ ALT1	UART2_CTS_ b	EWM_IN			
91	64	PTE5/ LLWU_P6	Disabled		PTE5/ LLWU_P6	QTMR0_ TMR3	UART2_RTS_ b	EWM_OUT_b			
92	65	PTE6/ LLWU_P5	SWD_DIO	CMP0_IN2	PTE6/ LLWU_P5	XBAR_IN5	UART2_RX		I2C0_SCL		SWD_DIO
93	66	PTE7	SWD_CLK	ADC0_SE6a	PTE7	XBAR_OUT5	UART2_TX		I2C0_SDA		SWD_CLK
94	67	PTF0/ LLWU_P4	Disabled	ADC0_SE7a/ CMP2_IN3	PTF0/ LLWU_P4	RTC_CLKOUT	QTMR0_ TMR2	CMP0_OUT			
95	68	PTF1	Disabled	LCD_P0/ ADC0_SE8/ CMP2_IN4	PTF1	QTMR0_ TMR0	XBAR_OUT6				LCD_P0
96	69	PTF2	Disabled	LCD_P1/ ADC0_SE9/ CMP2_IN5	PTF2	CMP1_OUT	RTC_CLKOUT				LCD_P1
97	—	PTK4	Disabled	LCD_P51	PTK4	XBAR_IN9	AFE_CLK				LCD_P51
98	—	PTK5	Disabled		PTK5	UART1_RX					
99	—	PTK6	Disabled		PTK6	UART1_TX					
100	70	PTF3/ LLWU_P20	Disabled	LCD_P2	PTF3/ LLWU_P20	SPI1_PCS0	LPTMR0_ ALT2	UART0_RX			LCD_P2
101	71	PTF4	Disabled	LCD_P3	PTF4	SPI1_SCK	LPTMR0_ ALT1	UART0_TX			LCD_P3
102	72	PTF5	Disabled	LCD_P4	PTF5	SPI1_MISO	I2C1_SCL				LCD_P4
103	73	PTF6/ LLWU_P3	Disabled	LCD_P5	PTF6/ LLWU_P3	SPI1_MOSI	I2C1_SDA				LCD_P5
104	74	PTF7	Disabled	LCD_P6	PTF7	QTMR0_ TMR2	CLKOUT	CMP2_OUT			LCD_P6

144 QFP	100 QFP	Pin Name	DEFAULT	ALT0	ALT1	ALT2	ALT3	ALT4	ALT5	ALT6	ALT7
105	—	PTK7	Disabled	LCD_P52	PTK7	I2C0_SCL	XBAR_OUT9				LCD_P52
106	—	PTL0	Disabled	LCD_P53	PTL0	I2C0_SDA					LCD_P53
107	—	NC	NC								
108	—	NC	NC								
109	—	NC	NC								
110	75	PTG0	Disabled	LCD_P7	PTG0	QTMR0_ TMR1	LPTMR0_ ALT3				LCD_P7
111	76	PTG1/ LLWU_P2	Disabled	LCD_P8/ ADC0_SE10	PTG1/ LLWU_P2		LPTMR0_ ALT1				LCD_P8
112	77	PTG2/ LLWU_P1	Disabled	LCD_P9/ ADC0_SE11	PTG2/ LLWU_P1	SPI0_PCS0					LCD_P9
113	78	PTG3	Disabled	LCD_P10	PTG3	SPI0_SCK	I2C0_SCL				LCD_P10
114	79	PTG4	Disabled	LCD_P11	PTG4	SPI0_MOSI	I2C0_SDA				LCD_P11
115	80	PTG5	Disabled	LCD_P12	PTG5	SPI0_MISO	LPTMR0_ ALT2				LCD_P12
116	81	PTG6/ LLWU_P0	Disabled	LCD_P13	PTG6/ LLWU_P0		LPTMR0_ ALT3				LCD_P13
117	82	PTG7	Disabled	LCD_P14	PTG7						LCD_P14
118	83	PTH0	Disabled	LCD_P15	PTH0	LPUART0_ CTS_b					LCD_P15
119	84	PTH1	Disabled	LCD_P16	PTH1	LPUART0_ RTS_b					LCD_P16
120	85	PTH2	Disabled	LCD_P17	PTH2	LPUART0_RX					LCD_P17
121	86	PTH3	Disabled	LCD_P18	PTH3	LPUART0_TX					LCD_P18
122	87	PTH4	Disabled	LCD_P19	PTH4						LCD_P19
123	88	PTH5	Disabled	LCD_P20	PTH5						LCD_P20
124	89	PTH6	Disabled		PTH6	UART1_CTS_ b	SPI1_PCS0	XBAR_IN7			
125	90	PTH7	Disabled		PTH7	UART1_RTS_ b	SPI1_SCK	XBAR_OUT7			
126	91	PTI0/ LLWU_P21	Disabled	CMP0_IN5	PTI0/ LLWU_P21	UART1_RX	XBAR_IN8	SPI1_MISO	SPI1_MOSI		
127	92	PTI1 (This pin is true open drain pad. External pull-up resistor should be added.)	Disabled		PTI1	UART1_TX	XBAR_OUT8	SPI1_MOSI	SPI1_MISO		
128	—	PTL1	Disabled	LCD_P54	PTL1	XBAR_IN10					LCD_P54
129	—	PTL2	Disabled	LCD_P55	PTL2	XBAR_OUT10					LCD_P55
130	93	PTI2/ LLWU_P22	Disabled	LCD_P21	PTI2/ LLWU_P22	LPUART0_RX					LCD_P21
131	94	PTI3	Disabled	LCD_P22	PTI3	LPUART0_TX	CMP2_OUT				LCD_P22
132	95	VSS	VSS	VSS							

144 QFP	100 QFP	Pin Name	DEFAULT	ALT0	ALT1	ALT2	ALT3	ALT4	ALT5	ALT6	ALT7
133	—	VDD	VDD	VDD							
134	96	VLL3	VLL3	VLL3							
135	97	VLL2	VLL2	VLL2/ LCD_P60	PTM0						LCD_P60
136	98	VLL1	VLL1	VLL1/ LCD_P61	PTM1						LCD_P61
137	99	VCAP2	VCAP2	VCAP2/ LCD_P62	PTM2						LCD_P62
138	100	VCAP1	VCAP1	VCAP1/ LCD_P63	PTM3						LCD_P63
139	—	PTL3	Disabled	LCD_P56	PTL3	EWM_IN					LCD_P56
140	—	PTL4	Disabled	LCD_P57	PTL4	EWM_OUT_b					LCD_P57
141	—	PTL5/ LLWU_P23	Disabled	LCD_P58	PTL5/ LLWU_P23						LCD_P58
142	—	PTL6	Disabled	LCD_P59	PTL6						LCD_P59
143	—	PTI4	Disabled	LCD_P44	PTI4						LCD_P44
144	—	NC	NC								

5.2 KM3x_256 Family Pinouts

5.2.1 100-pin LQFP

The following figure represents the KM3x_256 100 LQFP pinouts:

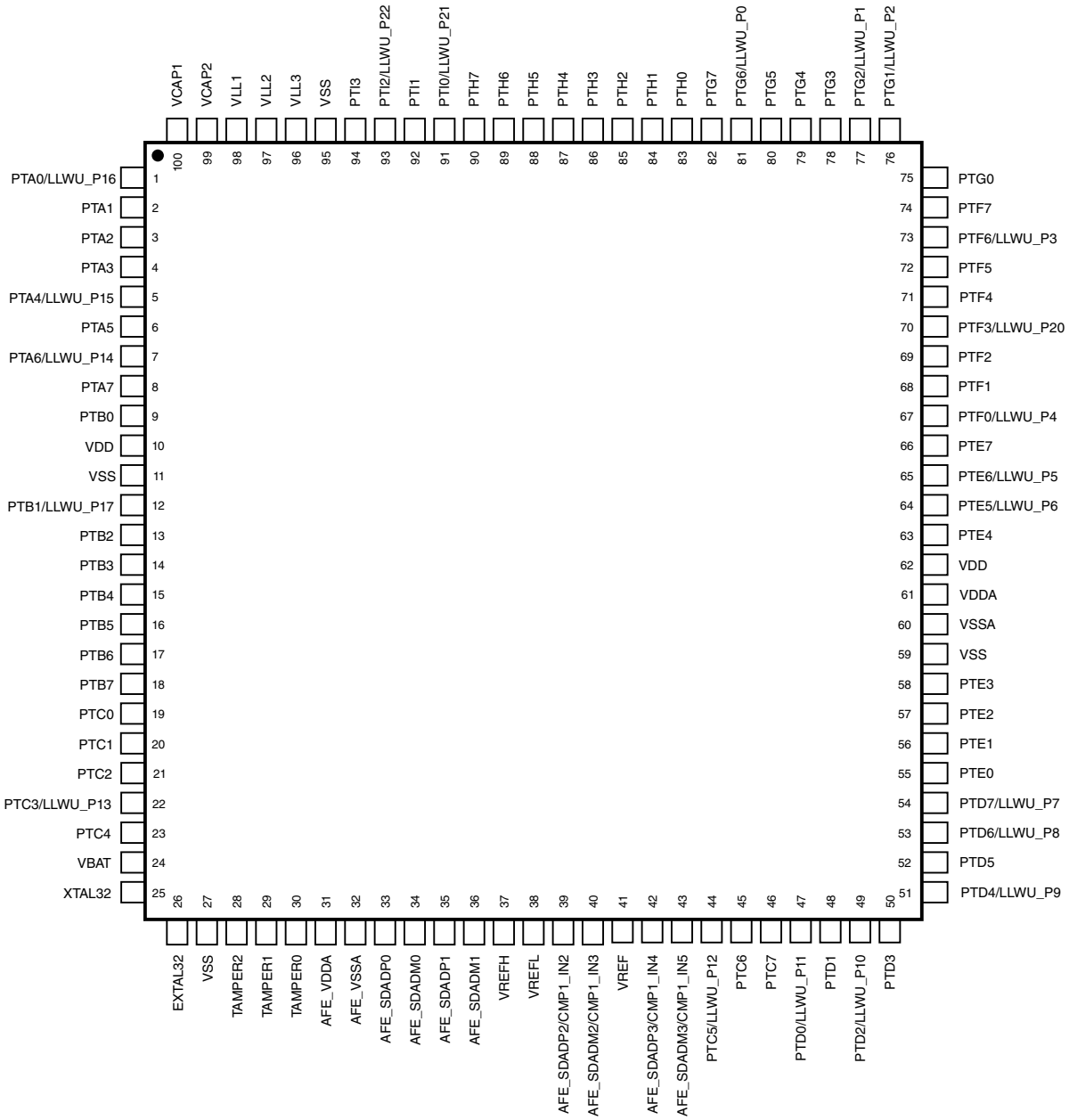

Figure 11. 100-pin LQFP Pinout Diagram

5.2.2 144-pin LQFP

The following figure represents the KM3x_256 144 LQFP pinouts:

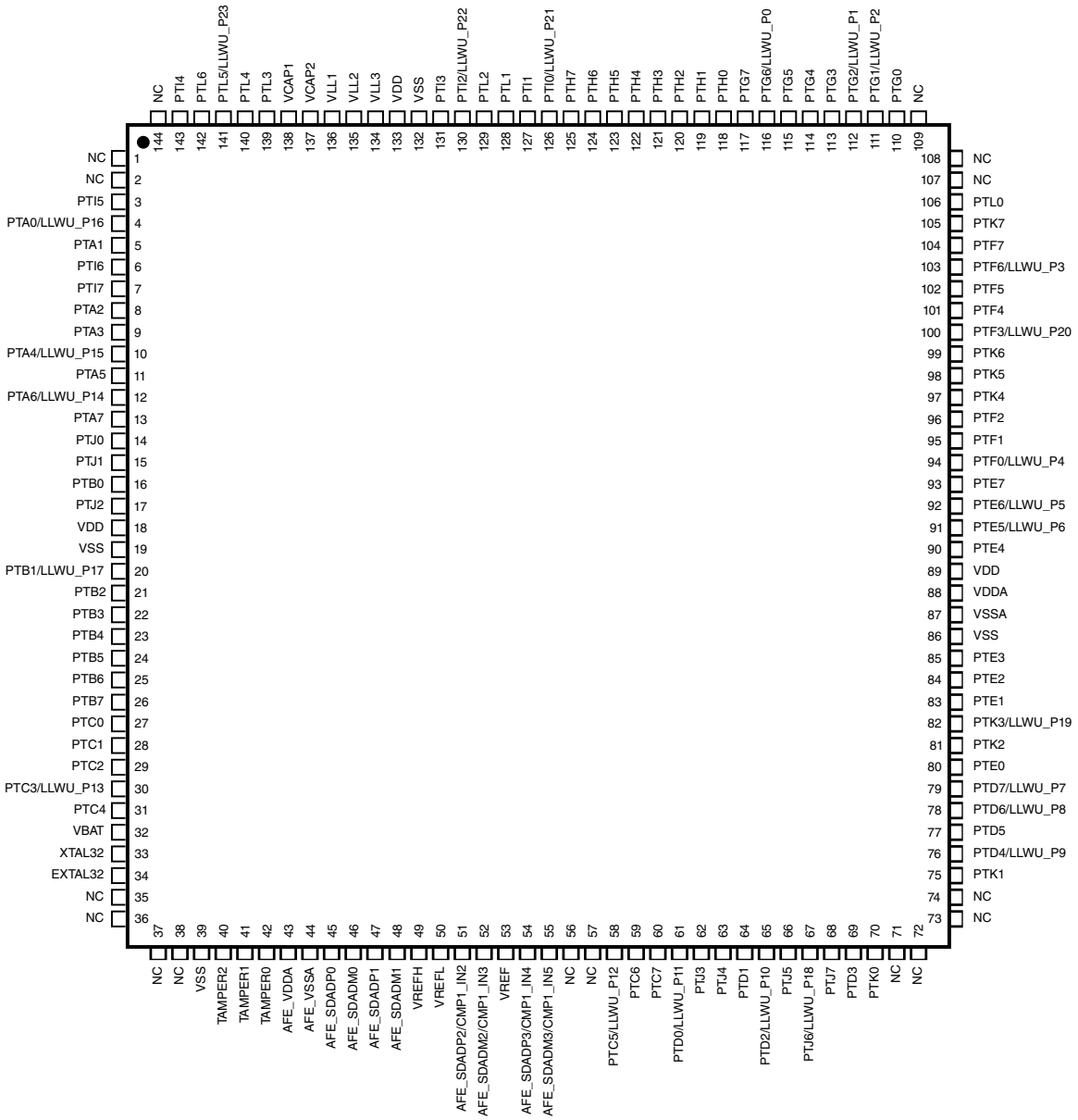

Figure 12. 144-pin LQFP Pinout Diagram

6 Ordering parts

6.1 Determining valid orderable parts

Valid orderable part numbers are provided on the web. To determine the orderable part numbers for this device, go to freescale.com and perform a part number search for the following device numbers:

- MKM34Z256VLL7
- MKM34Z256VLQ7

7 Part identification

7.1 Description

Part numbers for the chip have fields that identify the specific part. You can use the values of these fields to determine the specific part you have received.

7.2 Format

Part numbers for this device have the following format:

Q KM## A FFF R T PP CC N

7.3 Fields

Following table lists the possible values for each field in the part number (not all combinations are valid):

Field	Description	Values
Q	Qualification status	• M = Fully qualified, general market flow • P = Pre-qualification
KM##	Kinetis family	• KM34
A	Key attribute	• Z = Cortex®-M0+
FFF	Program flash memory size	• 256 = 256 KB
R	Silicon revision	• (Blank) = Main • A = Revision after main
T	Temperature range (°C)	• V = –40 to 105
PP	Package identifier	• LL = 100 LQFP (14 mm x 14 mm) • LQ = 144 LQFP (20 mm × 20 mm)

Table continues on the next page...

Field	Description	Values
CC	Maximum CPU frequency (MHz)	• 7 = 75 MHz
N	Packaging type	• R = Tape and reel • (Blank) = Trays

7.4 Example

This is an example part number:

- MKM34Z256VLL7

8 Terminology and guidelines

8.1 Definition: Operating requirement

An *operating requirement* is a specified value or range of values for a technical characteristic that you must guarantee during operation to avoid incorrect operation and possibly decreasing the useful life of the chip.

8.1.1 Example

This is an example of an operating requirement:

Symbol	Description	Min.	Max.	Unit
V_{DD}	1.0 V core supply voltage	0.9	1.1	V

8.2 Definition: Operating behavior

Unless otherwise specified, an *operating behavior* is a specified value or range of values for a technical characteristic that are guaranteed during operation if you meet the operating requirements and any other specified conditions.

8.2.1 Example

This is an example of an operating behavior:

Symbol	Description	Min.	Max.	Unit
I_{WP}	Digital I/O weak pullup/ pulldown current	10	130	μA

8.3 Definition: Attribute

An *attribute* is a specified value or range of values for a technical characteristic that are guaranteed, regardless of whether you meet the operating requirements.

8.3.1 Example

This is an example of an attribute:

Symbol	Description	Min.	Max.	Unit
CIN_D	Input capacitance: digital pins	—	7	pF

8.4 Definition: Rating

A *rating* is a minimum or maximum value of a technical characteristic that, if exceeded, may cause permanent chip failure:

- *Operating ratings* apply during operation of the chip.
- *Handling ratings* apply when the chip is not powered.

8.4.1 Example

This is an example of an operating rating:

Symbol	Description	Min.	Max.	Unit
V_{DD}	1.0 V core supply voltage	–0.3	1.2	V

8.5 Result of exceeding a rating

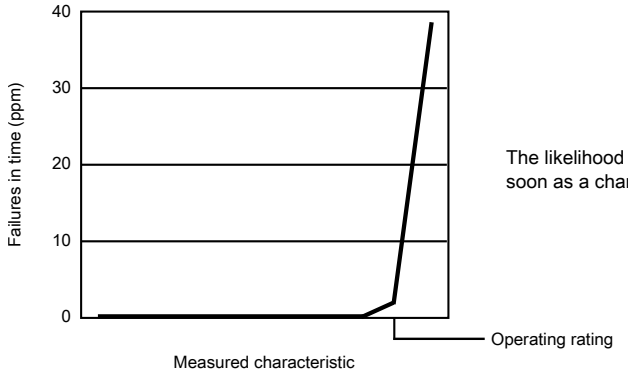

The likelihood of permanent chip failure increases rapidly as soon as a characteristic begins to exceed one of its operating ratings.

8.6 Relationship between ratings and operating requirements

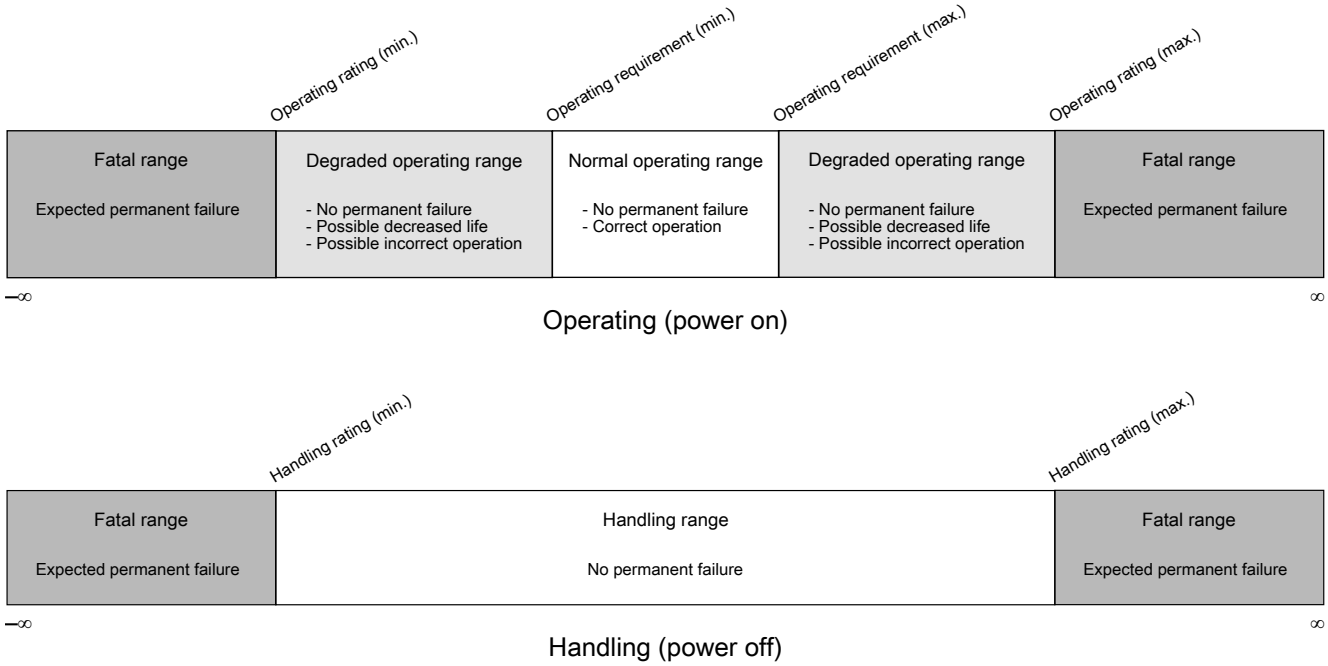

8.7 Guidelines for ratings and operating requirements

Follow these guidelines for ratings and operating requirements:

- Never exceed any of the chip's ratings.

- During normal operation, don't exceed any of the chip's operating requirements.
- If you must exceed an operating requirement at times other than during normal operation (for example, during power sequencing), limit the duration as much as possible.

8.8 Definition: Typical value

A *typical value* is a specified value for a technical characteristic that:

- Lies within the range of values specified by the operating behavior
- Given the typical manufacturing process, is representative of that characteristic during operation when you meet the typical-value conditions or other specified conditions

Typical values are provided as design guidelines and are neither tested nor guaranteed.

8.8.1 Example 1

This is an example of an operating behavior that includes a typical value:

Symbol	Description	Min.	Typ.	Max.	Unit
I_{WP}	Digital I/O weak pullup/pulldown current	10	70	130	μA

8.8.2 Example 2

This is an example of a chart that shows typical values for various voltage and temperature conditions:

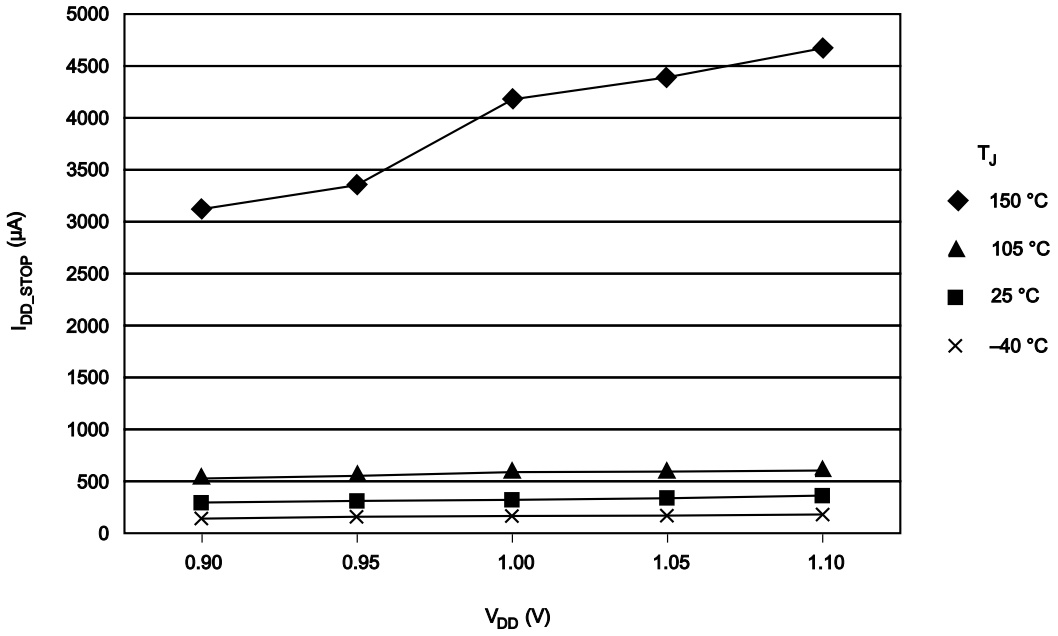

8.9 Typical value conditions

Typical values assume you meet the following conditions (or other conditions as specified):

Symbol	Description	Value	Unit
T_A	Ambient temperature	25	°C
V_{DD}	3.3 V supply voltage	3.3	V

9 Revision History

The following table provides a revision history for this document.

Table 40. Revision History

Rev. No.	Date	Substantial Changes
2	05/2015	Initial public release

How to Reach Us:

Home Page:
freescale.com

Web Support:
freescale.com/support

Information in this document is provided solely to enable system and software implementers to use Freescale products. There are no express or implied copyright licenses granted hereunder to design or fabricate any integrated circuits based on the information in this document. Freescale reserves the right to make changes without further notice to any products herein.

Freescale makes no warranty, representation, or guarantee regarding the suitability of its products for any particular purpose, nor does Freescale assume any liability arising out of the application or use of any product or circuit, and specifically disclaims any and all liability, including without limitation consequential or incidental damages. “Typical” parameters that may be provided in Freescale data sheets and/or specifications can and do vary in different applications, and actual performance may vary over time. All operating parameters, including “typicals,” must be validated for each customer application by customer's technical experts. Freescale does not convey any license under its patent rights nor the rights of others. Freescale sells products pursuant to standard terms and conditions of sale, which can be found at the following address: www.freescale.com/salestermsandconditions.

Freescale, the Freescale logo, and Kinetis are trademarks of Freescale Semiconductor, Inc., Reg. U.S. Pat. & Tm. Off. All other product or service names are the property of their respective owners. ARM and Cortex are registered trademarks of ARM Limited (or its subsidiaries) in the EU and/or elsewhere. All rights reserved.

© 2014-2015 Freescale Semiconductor, Inc.

Document Number KM34P144M75SF0
Revision 2, May 2015

Mouser Electronics

Authorized Distributor

Click to View Pricing, Inventory, Delivery & Lifecycle Information:

NXP:

MKM34Z256VLQ7 MKM34Z256VLL7 MKM34Z256VLL7R