Kinetis KL15 Sub-Family

48 MHz Cortex-M0+ Based Microcontroller

MKL15ZxxVFM4
MKL15ZxxVFT4
MKL15ZxxVLH4
MKL15ZxxVLK4

Designed with efficiency in mind. Compatible with all other Kinetis L families as well as Kinetis K1x family. General purpose MCU featuring market leading ultra low-power to provide developers an appropriate entry-level 32-bit solution.
This product offers:

- Run power consumption down to 47 µA/MHz in very low power run mode
- Static power consumption down to 2 µA with full state retention and 4 µs wakeup
- Ultra-efficient Cortex-M0+ processor running up to 48MHz with industry leading throughput
- Memory option is up to 128 KB flash and 16 KB RAM
- Energy-saving architecture is optimized for low power with 90 nm TFS technology, clock and power gating techniques, and zero wait state flash memory controller

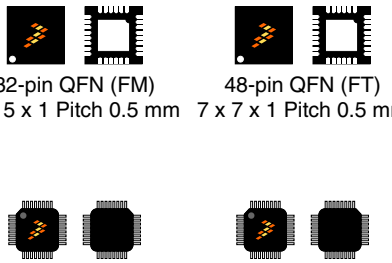

Performance

- 48 MHz ARM® Cortex®-M0+ core

Memories and memory interfaces

- Up to 128 KB program flash memory
- Up to 16 KB SRAM

System peripherals

- Nine low-power modes to provide power optimization based on application requirements
- COP Software watchdog
- 4-channel DMA controller, supporting up to 63 request sources
- Low-leakage wakeup unit
- SWD debug interface and Micro Trace Buffer
- Bit Manipulation Engine

Clocks

- 32 kHz to 40 kHz or 3 MHz to 32 MHz crystal oscillator
- Multi-purpose clock source
- 1 kHz LPO clock

Operating Characteristics

- Voltage range: 1.71 to 3.6 V
- Flash write voltage range: 1.71 to 3.6 V
- Temperature range (ambient): -40 to 105°C

Human-machine interface

- Low-power hardware touch sensor interface (TSI)
- Up to 70 general-purpose input/output (GPIO)

Communication interfaces

- Two 8-bit SPI modules
- One low power UART module
- Two UART modules
- Two I2C module

Analog Modules

- 16-bit SAR ADC
- 12-bit DAC
- Analog comparator (CMP) containing a 6-bit DAC and programmable reference input

Timers

- Six channel Timer/PWM (TPM)
- Two 2-channel Timer/PWM modules
- Periodic interrupt timers
- 16-bit low-power timer (LPTMR)
- Real time clock

Security and integrity modules

- 80-bit unique identification number per chip

Freescale reserves the right to change the detail specifications as may be required to permit improvements in the design of its products. © 2012–2014 Freescale Semiconductor, Inc. All rights reserved.

Ordering Information

Part Number	Memory		Maximum number of I\O's
	Flash (KB)	SRAM (KB)	
MKL15Z32VFM4	32	4	28
MKL15Z64VFM4	64	8	28
MKL15Z128VFM4	128	16	28
MKL15Z32VFT4	32	4	40
MKL15Z64VFT4	64	8	40
MKL15Z128VFT4	128	16	40
MKL15Z32VLH4	32	4	54
MKL15Z64VLH4	64	8	54
MKL15Z128VLH4	128	16	54
MKL15Z32VLK4	32	4	70
MKL15Z64VLK4	64	8	70
MKL15Z128VLK4	128	16	70

Related Resources

Type	Description	Resource
Selector Guide	The Freescale Solution Advisor is a web-based tool that features interactive application wizards and a dynamic product selector.	Solution Advisor
Product Brief	The Product Brief contains concise overview/summary information to enable quick evaluation of a device for design suitability.	KL1 Family Product Brief[1]
Reference Manual	The Reference Manual contains a comprehensive description of the structure and function (operation) of a device.	KL15P80M48SF0RM[1]
Data Sheet	The Data Sheet includes electrical characteristics and signal connections.	KL15P80M48SF0[1]
Chip Errata	The chip mask set Errata provides additional or corrective information for a particular device mask set.	KINETIS_L_*x*N97F[2]
Package drawing	Package dimensions are provided in package drawings.	QFN 32-pin: 98ASA00473D[1] QFN 48-pin: 98ASA00466D[1] LQFP 64-pin: 98ASS23234W[1] LQFP 80-pin: 98ASS23174W[1]

1. To find the associated resource, go to http://www.freescale.com and perform a search using this term.
2. To find the associated resource, go to http://www.freescale.com and perform a search using this term with the “*x*” replaced by the revision of the device you are using.

Figure 1 shows the functional modules in the chip.

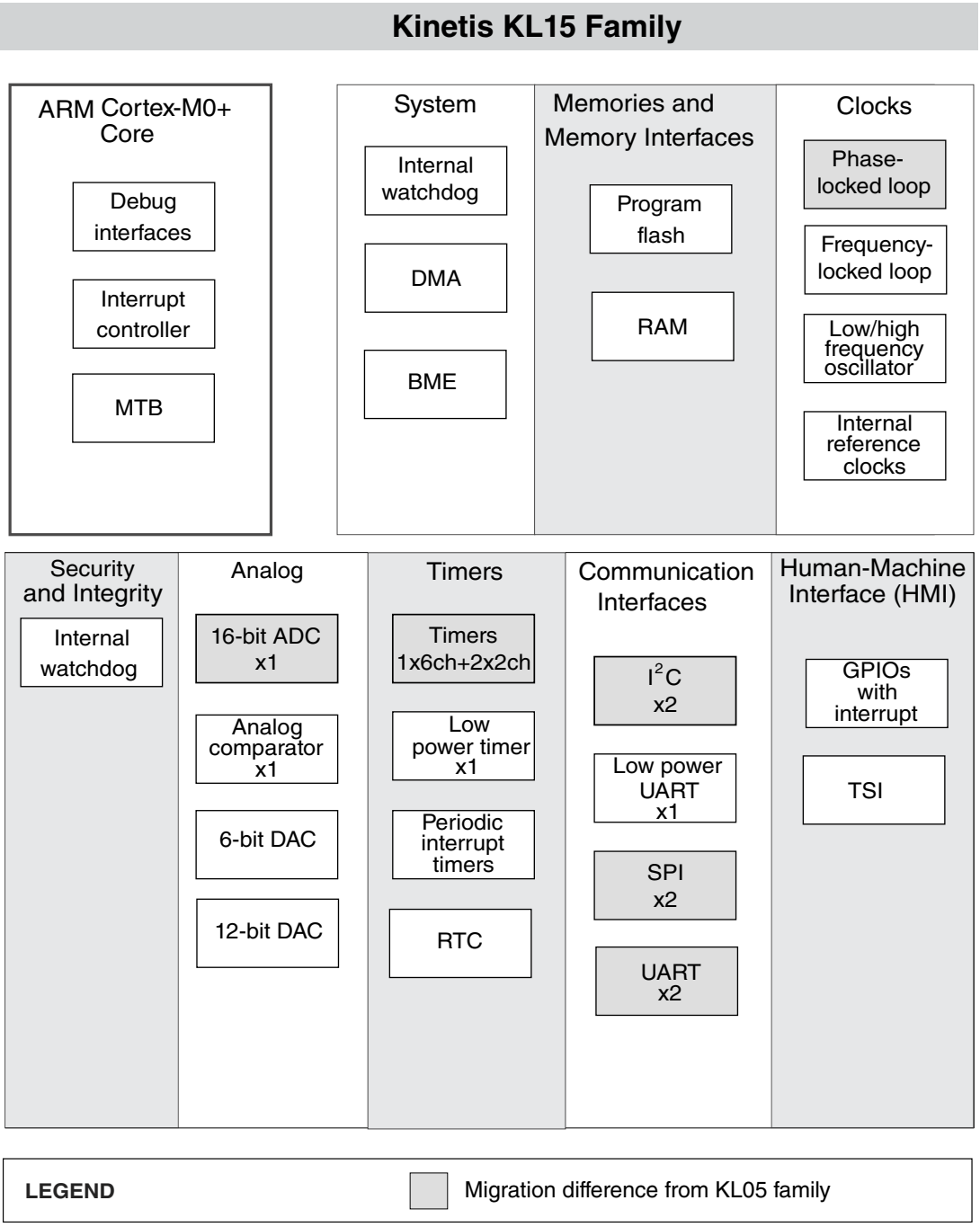

Figure 1. Functional block diagram

Table of Contents

1 Ratings....5
1.1 Thermal handling ratings....5
1.2 Moisture handling ratings....5
1.3 ESD handling ratings....5
1.4 Voltage and current operating ratings....5
2 General....6
2.1 AC electrical characteristics....6
2.2 Nonswitching electrical specifications....6
2.2.1 Voltage and current operating requirements....7
2.2.2 LVD and POR operating requirements....7
2.2.3 Voltage and current operating behaviors....8
2.2.4 Power mode transition operating behaviors....9
2.2.5 Power consumption operating behaviors....10
2.2.6 EMC radiated emissions operating behaviors....15
2.2.7 Designing with radiated emissions in mind....16
2.2.8 Capacitance attributes....16
2.3 Switching specifications....16
2.3.1 Device clock specifications....16
2.3.2 General switching specifications....17
2.4 Thermal specifications....17
2.4.1 Thermal operating requirements....17
2.4.2 Thermal attributes....18
3 Peripheral operating requirements and behaviors....18
3.1 Core modules....18
3.1.1 SWD electricals....18
3.2 System modules....20
3.3 Clock modules....20
3.3.1 MCG specifications....20
3.3.2 Oscillator electrical specifications....22
3.4 Memories and memory interfaces....24
3.4.1 Flash electrical specifications....24
3.5 Security and integrity modules....26
3.6 Analog....26
3.6.1 ADC electrical specifications....26
3.6.2 CMP and 6-bit DAC electrical specifications....31
3.6.3 12-bit DAC electrical characteristics....32
3.7 Timers....35
3.8 Communication interfaces....35
3.8.1 SPI switching specifications....35
3.8.2 Inter-Integrated Circuit Interface (I2C) timing....40
3.8.3 UART....41
3.9 Human-machine interfaces (HMI)....41
3.9.1 TSI electrical specifications....41
4 Dimensions....42
4.1 Obtaining package dimensions....42
5 Pinout....42
5.1 KL15 Signal Multiplexing and Pin Assignments....42
5.2 KL15 pinouts....45
6 Ordering parts....49
6.1 Determining valid orderable parts....49
7 Part identification....49
7.1 Description....50
7.2 Format....50
7.3 Fields....50
7.4 Example....50
8 Terminology and guidelines....51
8.1 Definition: Operating requirement....51
8.2 Definition: Operating behavior....51
8.3 Definition: Attribute....52
8.4 Definition: Rating....52
8.5 Result of exceeding a rating....52
8.6 Relationship between ratings and operating requirements....53
8.7 Guidelines for ratings and operating requirements....53
8.8 Definition: Typical value....54
8.9 Typical value conditions....55
9 Revision history....55

1 Ratings

1.1 Thermal handling ratings

Table 1. Thermal handling ratings

Symbol	Description	Min.	Max.	Unit	Notes
T_{STG}	Storage temperature	–55	150	°C	1
T_{SDR}	Solder temperature, lead-free	—	260	°C	2

1. Determined according to JEDEC Standard JESD22-A103, *High Temperature Storage Life*.
2. Determined according to IPC/JEDEC Standard J-STD-020, *Moisture/Reflow Sensitivity Classification for Nonhermetic Solid State Surface Mount Devices*.

1.2 Moisture handling ratings

Table 2. Moisture handling ratings

Symbol	Description	Min.	Max.	Unit	Notes
MSL	Moisture sensitivity level	—	3	—	1

1. Determined according to IPC/JEDEC Standard J-STD-020, *Moisture/Reflow Sensitivity Classification for Nonhermetic Solid State Surface Mount Devices*.

1.3 ESD handling ratings

Table 3. ESD handling ratings

Symbol	Description	Min.	Max.	Unit	Notes
V_{HBM}	Electrostatic discharge voltage, human body model	–2000	+2000	V	1
V_{CDM}	Electrostatic discharge voltage, charged-device model	–500	+500	V	2
I_{LAT}	Latch-up current at ambient temperature of 105 °C	–100	+100	mA	3

1. Determined according to JEDEC Standard JESD22-A114, *Electrostatic Discharge (ESD) Sensitivity Testing Human Body Model (HBM)*.
2. Determined according to JEDEC Standard JESD22-C101, *Field-Induced Charged-Device Model Test Method for Electrostatic-Discharge-Withstand Thresholds of Microelectronic Components*.
3. Determined according to JEDEC Standard JESD78, *IC Latch-Up Test*.

1.4 Voltage and current operating ratings

Table 4. Voltage and current operating ratings

Symbol	Description	Min.	Max.	Unit
V_{DD}	Digital supply voltage	–0.3	3.8	V
I_{DD}	Digital supply current	—	120	mA
V_{IO}	IO pin input voltage	–0.3	V_{DD} + 0.3	V
I_D	Instantaneous maximum current single pin limit (applies to all port pins)	–25	25	mA
V_{DDA}	Analog supply voltage	V_{DD} – 0.3	V_{DD} + 0.3	V

2 General

2.1 AC electrical characteristics

Unless otherwise specified, propagation delays are measured from the 50% to the 50% point, and rise and fall times are measured at the 20% and 80% points, as shown in the following figure.

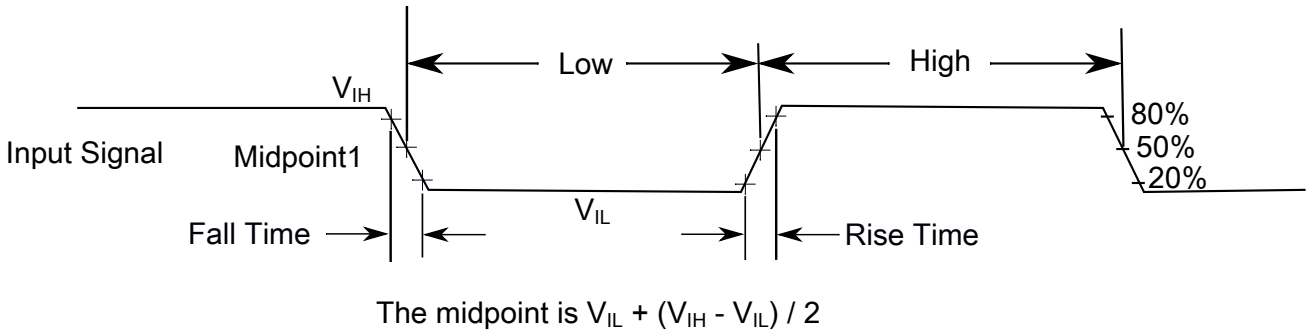

Figure 2. Input signal measurement reference

All digital I/O switching characteristics, unless otherwise specified, assume the output pins have the following characteristics.

- C_L=30 pF loads
- Slew rate disabled
- Normal drive strength

2.2 Nonswitching electrical specifications

2.2.1 Voltage and current operating requirements

Table 5. Voltage and current operating requirements

Symbol	Description	Min.	Max.	Unit	Notes
V_{DD}	Supply voltage	1.71	3.6	V	
V_{DDA}	Analog supply voltage	1.71	3.6	V	—
$V_{DD} – V_{DDA}$	V_{DD}-to-V_{DDA} differential voltage	–0.1	0.1	V	—
$V_{SS} – V_{SSA}$	V_{SS}-to-V_{SSA} differential voltage	–0.1	0.1	V	—
V_{IH}	Input high voltage • 2.7 V ≤ V_{DD} ≤ 3.6 V • 1.7 V ≤ V_{DD} ≤ 2.7 V	 0.7 × V_{DD} 0.75 × V_{DD}	 — —	 V V	—
V_{IL}	Input low voltage • 2.7 V ≤ V_{DD} ≤ 3.6 V • 1.7 V ≤ V_{DD} ≤ 2.7 V	 — —	 0.35 × V_{DD} 0.3 × V_{DD}	 V V	—
V_{HYS}	Input hysteresis	0.06 × V_{DD}	—	V	—
I_{ICIO}	IO pin negative DC injection current—single pin • V_{IN} < V_{SS}–0.3V	–3	—	mA	1
I_{ICcont}	Contiguous pin DC injection current —regional limit, includes sum of negative injection currents of 16 contiguous pins • Negative current injection	–25	—	mA	—
V_{ODPU}	Open drain pullup voltage level	V_{DD}	V_{DD}	V	2
V_{RAM}	V_{DD} voltage required to retain RAM	1.2	—	V	—

1. All I/O pins are internally clamped to V_{SS} through a ESD protection diode. There is no diode connection to V_{DD}. If V_{IN} greater than V_{IO_MIN} (= V_{SS}-0.3 V) is observed, then there is no need to provide current limiting resistors at the pads. If this limit cannot be observed then a current limiting resistor is required. The negative DC injection current limiting resistor is calculated as $R = (V_{IO_MIN} - V_{IN})/|I_{ICIO}|$.
2. Open drain outputs must be pulled to V_{DD}.

2.2.2 LVD and POR operating requirements

Table 6. V_{DD} supply LVD and POR operating requirements

Symbol	Description	Min.	Typ.	Max.	Unit	Notes
V_{POR}	Falling V_{DD} POR detect voltage	0.8	1.1	1.5	V	—
V_{LVDH}	Falling low-voltage detect threshold — high range (LVDV = 01)	2.48	2.56	2.64	V	—
	Low-voltage warning thresholds — high range					1

Table continues on the next page...

Table 6. V_{DD} supply LVD and POR operating requirements (continued)

Symbol	Description	Min.	Typ.	Max.	Unit	Notes
V_{LVW1H}	• Level 1 falling (LVWV = 00)	2.62	2.70	2.78	V	
V_{LVW2H}	• Level 2 falling (LVWV = 01)	2.72	2.80	2.88	V	
V_{LVW3H}	• Level 3 falling (LVWV = 10)	2.82	2.90	2.98	V	
V_{LVW4H}	• Level 4 falling (LVWV = 11)	2.92	3.00	3.08	V	
V_{HYSH}	Low-voltage inhibit reset/recover hysteresis — high range	—	±60	—	mV	—
V_{LVDL}	Falling low-voltage detect threshold — low range (LVDV=00)	1.54	1.60	1.66	V	—
	Low-voltage warning thresholds — low range					1
V_{LVW1L}	• Level 1 falling (LVWV = 00)	1.74	1.80	1.86	V	
V_{LVW2L}	• Level 2 falling (LVWV = 01)	1.84	1.90	1.96	V	
V_{LVW3L}	• Level 3 falling (LVWV = 10)	1.94	2.00	2.06	V	
V_{LVW4L}	• Level 4 falling (LVWV = 11)	2.04	2.10	2.16	V	
V_{HYSL}	Low-voltage inhibit reset/recover hysteresis — low range	—	±40	—	mV	—
V_{BG}	Bandgap voltage reference	0.97	1.00	1.03	V	—
t_{LPO}	Internal low power oscillator period — factory trimmed	900	1000	1100	μs	—

1. Rising thresholds are falling threshold + hysteresis voltage

2.2.3 Voltage and current operating behaviors

Table 7. Voltage and current operating behaviors

Symbol	Description	Min.	Max.	Unit	Notes
V_{OH}	Output high voltage — Normal drive pad (except $\overline{\text{RESET}}$)				1, 2
	• 2.7 V ≤ V_{DD} ≤ 3.6 V, I_{OH} = –5 mA	V_{DD} – 0.5	—	V	
	• 1.71 V ≤ V_{DD} ≤ 2.7 V, I_{OH} = –1.5 mA	V_{DD} – 0.5	—	V	
V_{OH}	Output high voltage — High drive pad (except $\overline{\text{RESET}}$)				1, 2
	• 2.7 V ≤ V_{DD} ≤ 3.6 V, I_{OH} = –18 mA	V_{DD} – 0.5	—	V	
	• 1.71 V ≤ V_{DD} ≤ 2.7 V, I_{OH} = –6 mA	V_{DD} – 0.5	—	V	
I_{OHT}	Output high current total for all ports	—	100	mA	—
V_{OL}	Output low voltage — Normal drive pad				1
	• 2.7 V ≤ V_{DD} ≤ 3.6 V, I_{OL} = 5 mA	—	0.5	V	
	• 1.71 V ≤ V_{DD} ≤ 2.7 V, I_{OL} = 1.5 mA	—	0.5	V	

Table continues on the next page...

Table 7. Voltage and current operating behaviors (continued)

Symbol	Description	Min.	Max.	Unit	Notes
V_{OL}	Output low voltage — High drive pad • 2.7 V ≤ V_{DD} ≤ 3.6 V, I_{OL} = 18 mA • 1.71 V ≤ V_{DD} ≤ 2.7 V, I_{OL} = 6 mA	 — —	 0.5 0.5	 V V	1
I_{OLT}	Output low current total for all ports	—	100	mA	—
I_{IN}	Input leakage current (per pin) for full temperature range	—	1	μA	3
I_{IN}	Input leakage current (per pin) at 25 °C	—	0.025	μA	3
I_{IN}	Input leakage current (total all pins) for full temperature range	—	65	μA	3
I_{OZ}	Hi-Z (off-state) leakage current (per pin)	—	1	μA	—
R_{PU}	Internal pullup resistors	20	50	kΩ	4
R_{PD}	Internal pulldown resistors	20	50	kΩ	5

1. PTB0, PTB1, PTD6, and PTD7 I/O have both high drive and normal drive capability selected by the associated PTx_PCRn[DSE] control bit. All other GPIOs are normal drive only.
2. The reset pin only contains an active pull down device when configured as the RESET signal or as a GPIO. When configured as a GPIO output, it acts as a pseudo open drain output.
3. Measured at V_{DD} = 3.6 V
4. Measured at V_{DD} supply voltage = V_{DD} min and Vinput = V_{SS}
5. Measured at VDD supply voltage = VDD min and Vinput = VDD

2.2.4 Power mode transition operating behaviors

All specifications except t_{POR} and VLLSx→RUN recovery times in the following table assume this clock configuration:

- CPU and system clocks = 48 MHz
- Bus and flash clock = 24 MHz
- FEI clock mode

POR and VLLSx→RUN recovery use FEI clock mode at the default CPU and system frequency of 21 MHz, and a bus and flash clock frequency of 10.5 MHz.

Table 8. Power mode transition operating behaviors

Symbol	Description	Min.	Typ.	Max.	Unit	
t_{POR}	After a POR event, amount of time from the point V_{DD} reaches 1.8 V to execution of the first instruction across the operating temperature range of the chip.	—	—	300	μs	1
	• VLLS0 → RUN	—	95	115	μs	

Table continues on the next page...

Table 8. Power mode transition operating behaviors (continued)

Symbol	Description	Min.	Typ.	Max.	Unit	
	• VLLS1 → RUN	—	93	115	μs	
	• VLLS3 → RUN	—	42	53	μs	
	• LLS → RUN	—	4	4.6	μs	
	• VLPS → RUN	—	4	4.4	μs	
	• STOP → RUN	—	4	4.4	μs	

1. Normal boot (FTFA_FOPT[LPBOOT]=11).

2.2.5 Power consumption operating behaviors

The maximum values stated in the following table represent characterized results equivalent to the mean plus three times the standard deviation (mean + 3 sigma).

Table 9. Power consumption operating behaviors

Symbol	Description	Temp.	Typ.	Max	Unit	Note
I_{DDA}	Analog supply current	—	—	See note	mA	1
$I_{DD_RUNCO_CM}$	Run mode current in compute operation - 48 MHz core / 24 MHz flash/ bus disabled, LPTMR running using 4 MHz internal reference clock, CoreMark® benchmark code executing from flash, at 3.0 V	—	6.4	—	mA	2
I_{DD_RUNCO}	Run mode current in compute operation - 48 MHz core / 24 MHz flash / bus clock disabled, code of while(1) loop executing from flash, at 3.0 V	—	3.9	4.8	mA	3
I_{DD_RUN}	Run mode current - 48 MHz core / 24 MHz bus and flash, all peripheral clocks disabled, code executing from flash, at 3.0 V	—	5	5.9	mA	3
I_{DD_RUN}	Run mode current - 48 MHz core / 24 MHz bus and flash, all peripheral clocks enabled, code executing from flash, at 3.0 V	at 25 °C	6.2	6.5	mA	3, 4
		at 125 °C	6.8	7.1	mA	

Table continues on the next page...

Table 9. Power consumption operating behaviors (continued)

Symbol	Description	Temp.	Typ.	Max	Unit	Note
I_{DD_WAIT}	Wait mode current - core disabled / 48 MHz system / 24 MHz bus / flash disabled (flash doze enabled), all peripheral clocks disabled, at 3.0 V	—	3.1	3.8	mA	3
I_{DD_WAIT}	Wait mode current - core disabled / 24 MHz system / 24 MHz bus / flash disabled (flash doze enabled), all peripheral clocks disabled • at 3.0 V	—	2.4	3.2	mA	3
I_{DD_PSTOP2}	Stop mode current with partial stop 2 clocking option - core and system disabled / 10.5 MHz bus, at 3.0 V	—	1.6	2	mA	3
$I_{DD_VLPRCO_CM}$	Very-low-power run mode current in compute operation - 4 MHz core / 0.8 MHz flash / bus clock disabled, LPTMR running with 4 MHz internal reference clock, CoreMark benchmark code executing from flash, at 3.0 V	—	777	—	µA	5
I_{DD_VLPRCO}	Very low power run mode current in compute operation - 4 MHz core / 0.8 MHz flash / bus clock disabled, code executing from flash, at 3.0 V	—	171	420	µA	6
I_{DD_VLPR}	Very low power run mode current - 4 MHz core / 0.8 MHz bus and flash, all peripheral clocks disabled, code executing from flash, at 3.0 V	—	204	449	µA	6
I_{DD_VLPR}	Very low power run mode current - 4 MHz core / 0.8 MHz bus and flash, all peripheral clocks enabled, code executing from flash, at 3.0 V	—	262	509	µA	4, 6
I_{DD_VLPW}	Very low power wait mode current - core disabled / 4 MHz system / 0.8 MHz bus / flash disabled (flash doze enabled), all peripheral clocks disabled, at 3.0 V	—	123	366	µA	6
I_{DD_STOP}	Stop mode current at 3.0 V	at 25 °C	319	343	µA	—
		at 50 °C	333	365	µA	
		at 70 °C	353	400	µA	
		at 85 °C	380	450	µA	
		at 105 °C	444	572	µA	
I_{DD_VLPS}	Very-low-power stop mode current at 3.0 V	at 25 °C	3.75	8.46	µA	—
		at 50 °C	6.66	13.41	µA	
		at 70 °C	12.9	25.71	µA	
		at 85 °C	22.7	44.06	µA	
		at 105 °C	48.4	90.1	µA	
I_{DD_LLS}	Low leakage stop mode current at 3.0 V	at 25 °C	1.68	2.09	µA	—
		at 50 °C	3.05	4.04	µA	

Table continues on the next page...

Table 9. Power consumption operating behaviors (continued)

Symbol	Description	Temp.	Typ.	Max	Unit	Note
		at 70 °C	5.71	7.75	μA	
		at 85 °C	10	13.54	μA	
		at 105 °C	22.4	30.41	μA	
I_{DD_VLLS3}	Very low-leakage stop mode 3 current at 3.0 V	at 25 °C	1.22	1.6	μA	—
		at 50 °C	2.25	2.31	μA	
		at 70 °C	4.21	5.44	μA	
		at 85 °C	7.37	9.44	μA	
		at 105 °C	16.6	21.76	μA	
I_{DD_VLLS1}	Very low-leakage stop mode 1 current at 3.0 V	at 25 °C	0.58	0.94	μA	—
		at 50 °C	1.26	1.31	μA	
		at 70 °C	2.53	3.33	μA	
		at 85 °C	4.74	6.1	μA	
		at 105 °C	11.4	15.27	μA	
I_{DD_VLLS0}	Very low-leakage stop mode 0 current (SMC_STOPCTRL[PORPO] = 0) at 3.0 V	at 25 °C	0.31	0.65	μA	—
		at 50 °C	0.99	1.43	μA	
		at 70 °C	2.25	3.01	μA	
		at 85 °C	4.46	5.83	μA	
		at 105 °C	11.13	14.99	μA	
I_{DD_VLLS0}	Very low-leakage stop mode 0 current (SMC_STOPCTRL[PORPO] = 1) at 3.0 V	at 25 °C	0.12	0.47	μA	7
		at 50 °C	0.8	1.24	μA	
		at 70 °C	2.06	2.81	μA	
		at 85 °C	4.27	5.62	μA	
		at 105 °C	10.93	14.78	μA	

1. The analog supply current is the sum of the active or disabled current for each of the analog modules on the device. See each module's specification for its supply current.
2. MCG configured for PEE mode. CoreMark benchmark compiled using Keil 4.54 with optimization level 3, optimized for time.
3. MCG configured for FEI mode.
4. Incremental current consumption from peripheral activity is not included.
5. MCG configured for BLPI mode. CoreMark benchmark compiled using IAR 6.40 with optimization level high, optimized for balanced.
6. MCG configured for BLPI mode.
7. No brownout.

Table 10. Low power mode peripheral adders — typical value

Symbol	Description	Temperature (°C)						Unit
		-40	25	50	70	85	105	
$I_{IREFSTEN4MHz}$	4 MHz internal reference clock (IRC) adder. Measured by entering STOP or VLPS mode with 4 MHz IRC enabled.	56	56	56	56	56	56	μA

Table continues on the next page...

Table 10. Low power mode peripheral adders — typical value (continued)

Symbol	Description		Temperature (°C)						Unit
			-40	25	50	70	85	105	
$I_{IREFSTEN32KHz}$	32 kHz internal reference clock (IRC) adder. Measured by entering STOP mode with the 32 kHz IRC enabled.		52	52	52	52	52	52	μA
$I_{EREFSTEN4MHz}$	External 4 MHz crystal clock adder. Measured by entering STOP or VLPS mode with the crystal enabled.		206	228	237	245	251	258	μA
$I_{EREFSTEN32KHz}$	External 32 kHz crystal clock adder by means of the OSC0_CR[EREFSTEN and EREFSTEN] bits. Measured by entering all modes with the crystal enabled.	VLLS1	440	490	540	560	570	580	nA
		VLLS3	440	490	540	560	570	580	
		LLS	490	490	540	560	570	680	
		VLPS	510	560	560	560	610	680	
		STOP	510	560	560	560	610	680	
I_{CMP}	CMP peripheral adder measured by placing the device in VLLS1 mode with CMP enabled using the 6-bit DAC and a single external input for compare. Includes 6-bit DAC power consumption.		22	22	22	22	22	22	μA
I_{RTC}	RTC peripheral adder measured by placing the device in VLLS1 mode with external 32 kHz crystal enabled by means of the RTC_CR[OSCE] bit and the RTC ALARM set for 1 minute. Includes ERCLK32K (32 kHz external crystal) power consumption.		432	357	388	475	532	810	nA
I_{UART}	UART peripheral adder measured by placing the device in STOP or VLPS mode with selected clock source waiting for RX data at 115200 baud rate. Includes selected clock source power consumption.	MCGIRCLK (4 MHz internal reference clock)	66	66	66	66	66	66	μA
		OSCERCLK (4 MHz external crystal)	214	237	246	254	260	268	
I_{TPM}	TPM peripheral adder measured by placing the device in STOP or VLPS mode with selected clock source configured for output compare generating 100 Hz clock signal. No load is placed on the I/O generating the clock signal. Includes selected clock source and I/O switching currents.	MCGIRCLK (4 MHz internal reference clock)	86	86	86	86	86	86	μA
		OSCERCLK (4 MHz external crystal)	235	256	265	274	280	287	
I_{BG}	Bandgap adder when BGEN bit is set and device is placed in VLPx, LLS, or VLLSx mode.		45	45	45	45	45	45	μA
I_{ADC}	ADC peripheral adder combining the measured values at V_{DD} and V_{DDA} by placing		366	366	366	366	366	366	μA

Table 10. Low power mode peripheral adders — typical value

Symbol	Description	Temperature (°C)						Unit
		-40	25	50	70	85	105	
	the device in STOP or VLPS mode. ADC is configured for low power mode using the internal clock and continuous conversions.							

2.2.5.1 Diagram: Typical IDD_RUN operating behavior

The following data was measured under these conditions:

- MCG in FBE for run mode, and BLPE for VLPR mode
- No GPIOs toggled
- Code execution from flash with cache enabled
- For the ALLOFF curve, all peripheral clocks are disabled except FTFA

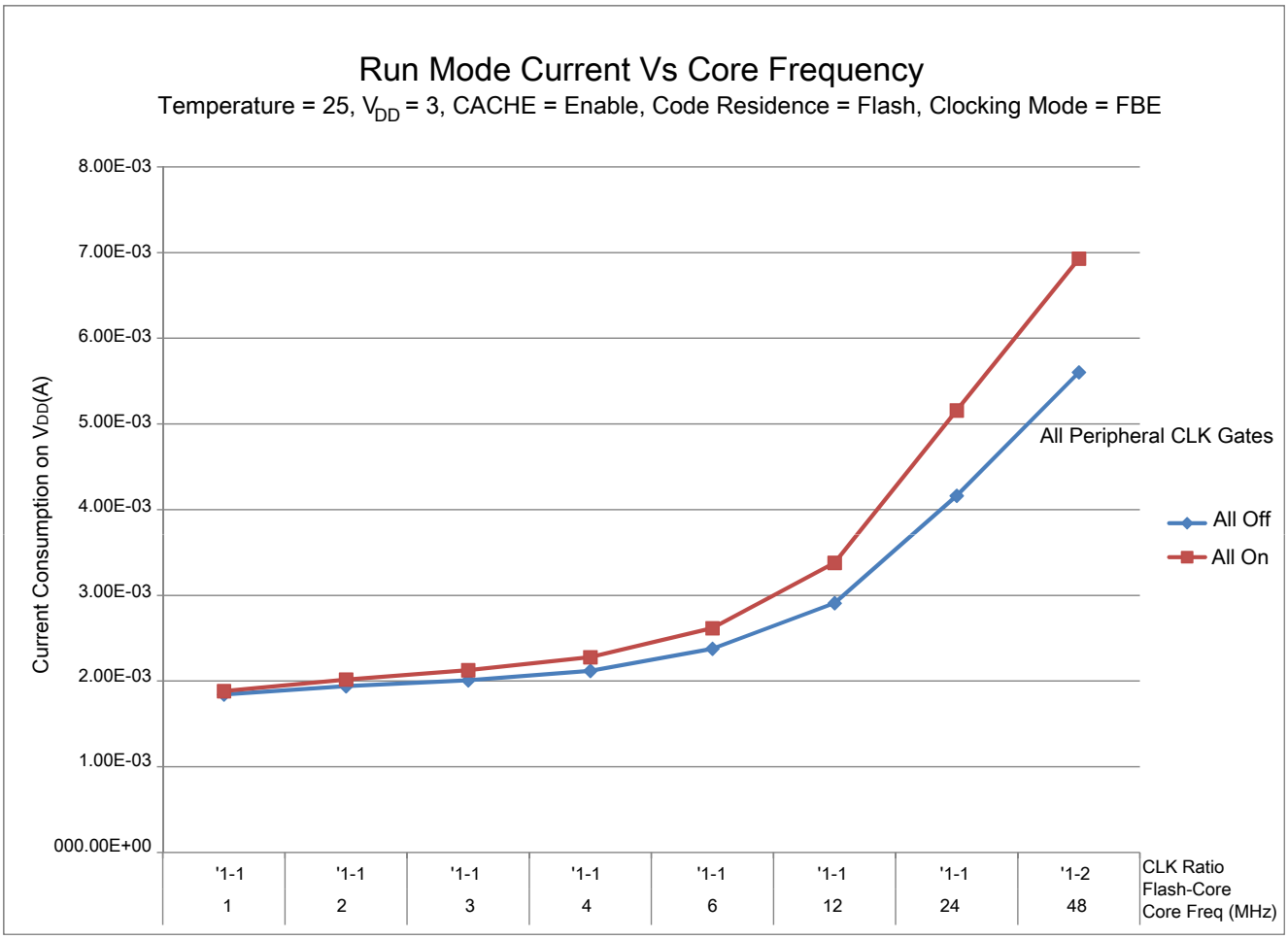

Figure 3. Run mode supply current vs. core frequency

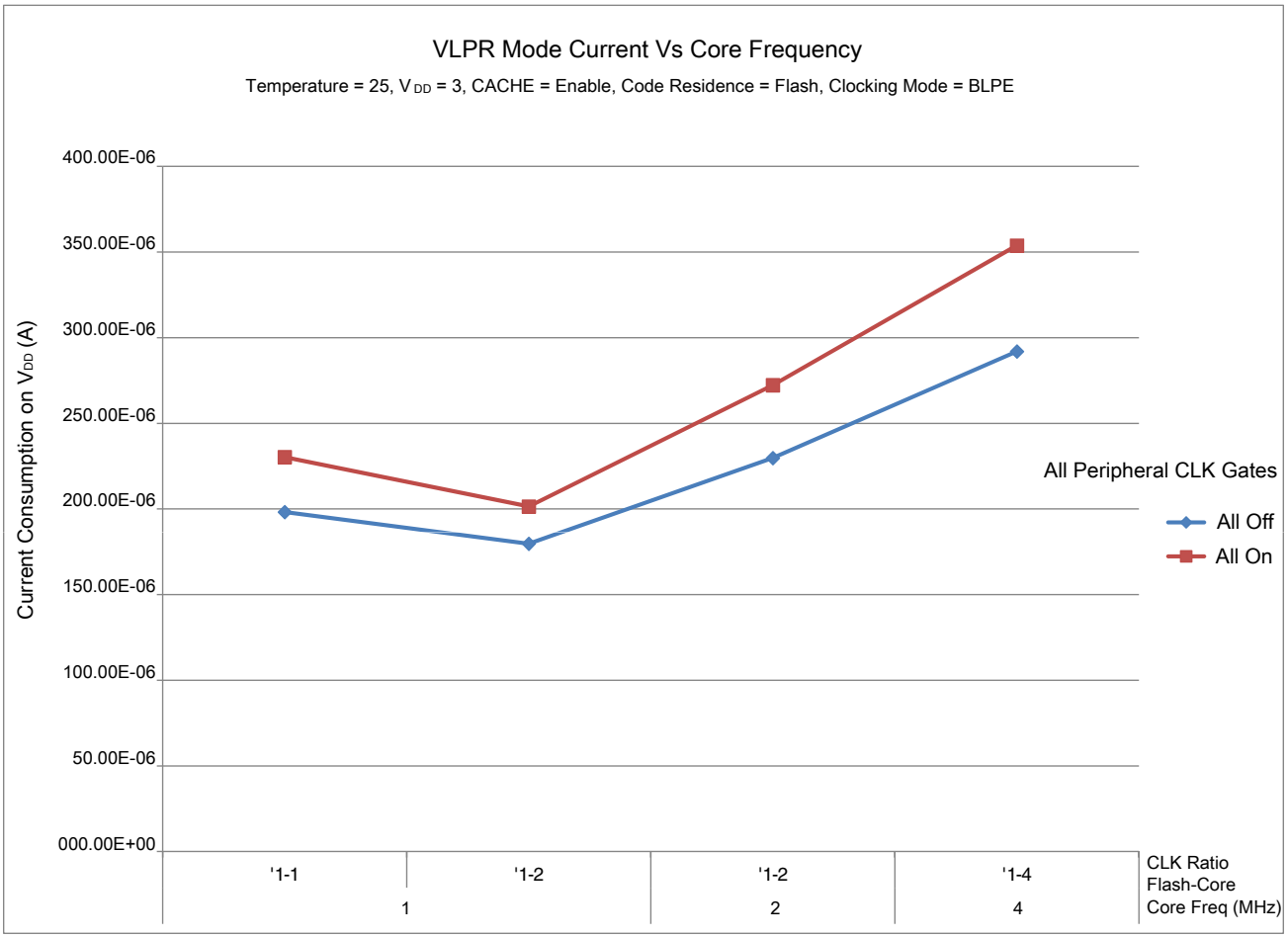

Figure 4. VLPR mode current vs. core frequency

2.2.6 EMC radiated emissions operating behaviors

Table 11. EMC radiated emissions operating behaviors for 64-pin LQFP package

Symbol	Description	Frequency band (MHz)	Typ.	Unit	Notes
V_{RE1}	Radiated emissions voltage, band 1	0.15–50	13	dBμV	1, 2
V_{RE2}	Radiated emissions voltage, band 2	50–150	15	dBμV	
V_{RE3}	Radiated emissions voltage, band 3	150–500	12	dBμV	
V_{RE4}	Radiated emissions voltage, band 4	500–1000	7	dBμV	
V_{RE_IEC}	IEC level	0.15–1000	M	—	2, 3

1. Determined according to IEC Standard 61967-1, *Integrated Circuits - Measurement of Electromagnetic Emissions, 150 kHz to 1 GHz Part 1: General Conditions and Definitions* and IEC Standard 61967-2, *Integrated Circuits - Measurement of Electromagnetic Emissions, 150 kHz to 1 GHz Part 2: Measurement of Radiated Emissions—TEM Cell and Wideband TEM Cell Method*. Measurements were made while the microcontroller was running basic

application code. The reported emission level is the value of the maximum measured emission, rounded up to the next whole number, from among the measured orientations in each frequency range.
2. V_{DD} = 3.3 V, T_A = 25 °C, f_{OSC} = 8 MHz (crystal), f_{SYS} = 48 MHz, f_{BUS} = 48 MHz
3. Specified according to Annex D of IEC Standard 61967-2, *Measurement of Radiated Emissions—TEM Cell and Wideband TEM Cell Method*

2.2.7 Designing with radiated emissions in mind

To find application notes that provide guidance on designing your system to minimize interference from radiated emissions:

1. Go to www.freescale.com.
2. Perform a keyword search for "EMC design."

2.2.8 Capacitance attributes

Table 12. Capacitance attributes

Symbol	Description	Min.	Max.	Unit
C_{IN}	Input capacitance	—	7	pF

2.3 Switching specifications

2.3.1 Device clock specifications

Table 13. Device clock specifications

Symbol	Description	Min.	Max.	Unit
Normal run mode				
f_{SYS}	System and core clock	—	48	MHz
f_{BUS}	Bus clock	—	24	MHz
f_{FLASH}	Flash clock	—	24	MHz
f_{LPTMR}	LPTMR clock	—	24	MHz
VLPR and VLPS modes[1]				
f_{SYS}	System and core clock	—	4	MHz
f_{BUS}	Bus clock	—	1	MHz
f_{FLASH}	Flash clock	—	1	MHz
f_{LPTMR}	LPTMR clock[2]	—	24	MHz
f_{ERCLK}	External reference clock	—	16	MHz

Table continues on the next page...

Table 13. Device clock specifications (continued)

Symbol	Description	Min.	Max.	Unit
f_{LPTMR_ERCLK}	LPTMR external reference clock	—	16	MHz
$f_{osc_hi_2}$	Oscillator crystal or resonator frequency — high frequency mode (high range) (MCG_C2[RANGE]=1x)	—	16	MHz
f_{TPM}	TPM asynchronous clock	—	8	MHz
f_{UART0}	UART0 asynchronous clock	—	8	MHz

1. The frequency limitations in VLPR and VLPS modes here override any frequency specification listed in the timing specification for any other module. These same frequency limits apply to VLPS, whether VLPS was entered from RUN or from VLPR.
2. The LPTMR can be clocked at this speed in VLPR or VLPS only when the source is an external pin.

2.3.2 General switching specifications

These general-purpose specifications apply to all signals configured for GPIO and UART signals.

Table 14. General switching specifications

Description	Min.	Max.	Unit	Notes
GPIO pin interrupt pulse width (digital glitch filter disabled) — Synchronous path	1.5	—	Bus clock cycles	1
External RESET and NMI pin interrupt pulse width — Asynchronous path	100	—	ns	2
GPIO pin interrupt pulse width — Asynchronous path	16	—	ns	2
Port rise and fall time	—	36	ns	3

1. The greater synchronous and asynchronous timing must be met.
2. This is the shortest pulse that is guaranteed to be recognized.
3. 75 pF load

2.4 Thermal specifications

2.4.1 Thermal operating requirements

Table 15. Thermal operating requirements

Symbol	Description	Min.	Max.	Unit
T_J	Die junction temperature	–40	125	°C
T_A	Ambient temperature	–40	105	°C

2.4.2 Thermal attributes

Table 16. Thermal attributes

Board type	Symbol	Description	80 LQFP	64 LQFP	48 QFN	32 QFN	Unit	Notes
Single-layer (1S)	$R_{\theta JA}$	Thermal resistance, junction to ambient (natural convection)	70	71	84	92	°C/W	1
Four-layer (2s2p)	$R_{\theta JA}$	Thermal resistance, junction to ambient (natural convection)	53	52	28	33	°C/W	
Single-layer (1S)	$R_{\theta JMA}$	Thermal resistance, junction to ambient (200 ft./min. air speed)	—	59	69	75	°C/W	
Four-layer (2s2p)	$R_{\theta JMA}$	Thermal resistance, junction to ambient (200 ft./min. air speed)	—	46	22	27	°C/W	
—	$R_{\theta JB}$	Thermal resistance, junction to board	34	34	10	12	°C/W	2
—	$R_{\theta JC}$	Thermal resistance, junction to case	15	20	2.0	1.8	°C/W	3
—	Ψ_{JT}	Thermal characterization parameter, junction to package top outside center (natural convection)	0.6	5	5.0	8	°C/W	4

1. Determined according to JEDEC Standard JESD51-2, *Integrated Circuits Thermal Test Method Environmental Conditions—Natural Convection (Still Air)*, or EIA/JEDEC Standard JESD51-6, *Integrated Circuit Thermal Test Method Environmental Conditions—Forced Convection (Moving Air)*.
2. Determined according to JEDEC Standard JESD51-8, *Integrated Circuit Thermal Test Method Environmental Conditions—Junction-to-Board*.
3. Determined according to Method 1012.1 of MIL-STD 883, *Test Method Standard, Microcircuits*, with the cold plate temperature used for the case temperature. The value includes the thermal resistance of the interface material between the top of the package and the cold plate.
4. Determined according to JEDEC Standard JESD51-2, *Integrated Circuits Thermal Test Method Environmental Conditions—Natural Convection (Still Air)*.

3 Peripheral operating requirements and behaviors

3.1 Core modules

3.1.1 SWD electricals

Table 17. SWD full voltage range electricals

Symbol	Description	Min.	Max.	Unit
	Operating voltage	1.71	3.6	V
J1	SWD_CLK frequency of operation • Serial wire debug	0	25	MHz
J2	SWD_CLK cycle period	1/J1	—	ns
J3	SWD_CLK clock pulse width • Serial wire debug	20	—	ns
J4	SWD_CLK rise and fall times	—	3	ns
J9	SWD_DIO input data setup time to SWD_CLK rise	10	—	ns
J10	SWD_DIO input data hold time after SWD_CLK rise	0	—	ns
J11	SWD_CLK high to SWD_DIO data valid	—	32	ns
J12	SWD_CLK high to SWD_DIO high-Z	5	—	ns

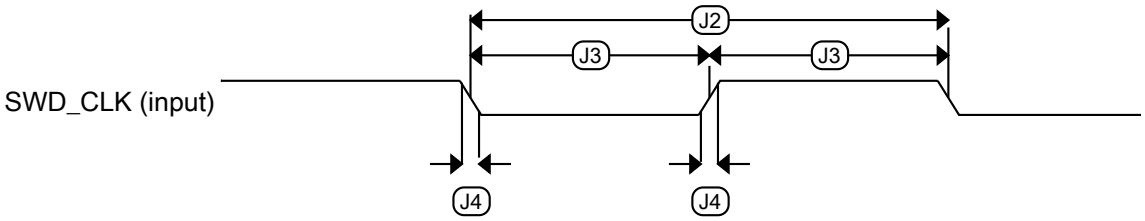

Figure 5. Serial wire clock input timing

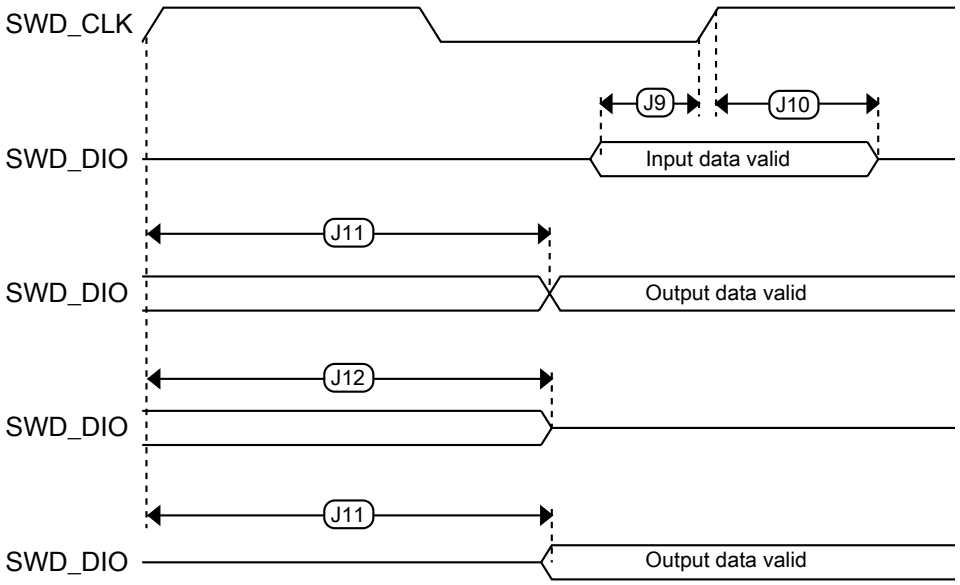

Figure 6. Serial wire data timing

3.2 System modules

There are no specifications necessary for the device's system modules.

3.3 Clock modules

3.3.1 MCG specifications

Table 18. MCG specifications

Symbol	Description	Min.	Typ.	Max.	Unit	Notes
f_{ints_ft}	Internal reference frequency (slow clock) — factory trimmed at nominal V_{DD} and 25 °C	—	32.768	—	kHz	
f_{ints_t}	Internal reference frequency (slow clock) — user trimmed	31.25	—	39.0625	kHz	
$\Delta_{fdco_res_t}$	Resolution of trimmed average DCO output frequency at fixed voltage and temperature — using C3[SCTRIM] and C4[SCFTRIM]	—	± 0.3	± 0.6	$\%f_{dco}$	1

Table continues on the next page...

Table 18. MCG specifications (continued)

Symbol	Description		Min.	Typ.	Max.	Unit	Notes
Δf_{dco_t}	Total deviation of trimmed average DCO output frequency over voltage and temperature		—	+0.5/-0.7	± 3	$\%f_{dco}$	1, 2
Δf_{dco_t}	Total deviation of trimmed average DCO output frequency over fixed voltage and temperature range of 0–70 °C		—	± 0.4	± 1.5	$\%f_{dco}$	1, 2
f_{intf_ft}	Internal reference frequency (fast clock) — factory trimmed at nominal V_{DD} and 25 °C		—	4	—	MHz	
Δf_{intf_ft}	Frequency deviation of internal reference clock (fast clock) over temperature and voltage — factory trimmed at nominal V_{DD} and 25 °C		—	+1/-2	± 3	$\%f_{intf_ft}$	2
f_{intf_t}	Internal reference frequency (fast clock) — user trimmed at nominal V_{DD} and 25 °C		3	—	5	MHz	
f_{loc_low}	Loss of external clock minimum frequency — RANGE = 00		(3/5) x f_{ints_t}	—	—	kHz	
f_{loc_high}	Loss of external clock minimum frequency — RANGE = 01, 10, or 11		(16/5) x f_{ints_t}	—	—	kHz	
FLL							
f_{fll_ref}	FLL reference frequency range		31.25	—	39.0625	kHz	
f_{dco}	DCO output frequency range	Low range (DRS = 00) $640 \times f_{fll_ref}$	20	20.97	25	MHz	3, 4
		Mid range (DRS = 01) $1280 \times f_{fll_ref}$	40	41.94	48	MHz	
$f_{dco_t_DMX32}$	DCO output frequency	Low range (DRS = 00) $732 \times f_{fll_ref}$	—	23.99	—	MHz	5, 6
		Mid range (DRS = 01) $1464 \times f_{fll_ref}$	—	47.97	—	MHz	
J_{cyc_fll}	FLL period jitter • f_{VCO} = 48 MHz		—	180	—	ps	7
$t_{fll_acquire}$	FLL target frequency acquisition time		—	—	1	ms	8
PLL							
f_{vco}	VCO operating frequency		48.0	—	100	MHz	
I_{pll}	PLL operating current • PLL at 96 MHz ($f_{osc_hi_1}$ = 8 MHz, f_{pll_ref} = 2 MHz, VDIV multiplier = 48)		—	1060	—	μA	9
I_{pll}	PLL operating current • PLL at 48 MHz ($f_{osc_hi_1}$ = 8 MHz, f_{pll_ref} = 2 MHz, VDIV multiplier = 24)		—	600	—	μA	9
f_{pll_ref}	PLL reference frequency range		2.0	—	4.0	MHz	
J_{cyc_pll}	PLL period jitter (RMS) • f_{vco} = 48 MHz • f_{vco} = 100 MHz		 — —	 120 50	 — —	 ps ps	10

Table continues on the next page...

Table 18. MCG specifications (continued)

Symbol	Description	Min.	Typ.	Max.	Unit	Notes
J_{acc_pll}	PLL accumulated jitter over 1µs (RMS)					10
	• f_{vco} = 48 MHz	—	1350	—	ps	
	• f_{vco} = 100 MHz	—	600	—	ps	
D_{lock}	Lock entry frequency tolerance	± 1.49	—	± 2.98	%	
D_{unl}	Lock exit frequency tolerance	± 4.47	—	± 5.97	%	
t_{pll_lock}	Lock detector detection time	—	—	$150 \times 10^{-6} + 1075(1/f_{pll_ref})$	s	11

1. This parameter is measured with the internal reference (slow clock) being used as a reference to the FLL (FEI clock mode).
2. The deviation is relative to the factory trimmed frequency at nominal V_{DD} and 25 °C, f_{ints_ft}.
3. These typical values listed are with the slow internal reference clock (FEI) using factory trim and DMX32 = 0.
4. The resulting system clock frequencies must not exceed their maximum specified values. The DCO frequency deviation (Δf_{dco_t}) over voltage and temperature must be considered.
5. These typical values listed are with the slow internal reference clock (FEI) using factory trim and DMX32 = 1.
6. The resulting clock frequency must not exceed the maximum specified clock frequency of the device.
7. This specification is based on standard deviation (RMS) of period or frequency.
8. This specification applies to any time the FLL reference source or reference divider is changed, trim value is changed, DMX32 bit is changed, DRS bits are changed, or changing from FLL disabled (BLPE, BLPI) to FLL enabled (FEI, FEE, FBE, FBI). If a crystal/resonator is being used as the reference, this specification assumes it is already running.
9. Excludes any oscillator currents that are also consuming power while PLL is in operation.
10. This specification was obtained using a Freescale developed PCB. PLL jitter is dependent on the noise characteristics of each PCB and results will vary.
11. This specification applies to any time the PLL VCO divider or reference divider is changed, or changing from PLL disabled (BLPE, BLPI) to PLL enabled (PBE, PEE). If a crystal/resonator is being used as the reference, this specification assumes it is already running.

3.3.2 Oscillator electrical specifications

3.3.2.1 Oscillator DC electrical specifications

Table 19. Oscillator DC electrical specifications

Symbol	Description	Min.	Typ.	Max.	Unit	Notes
V_{DD}	Supply voltage	1.71	—	3.6	V	
I_{DDOSC}	Supply current — low-power mode (HGO=0)					1
	• 32 kHz	—	500	—	nA	
	• 4 MHz	—	200	—	µA	
	• 8 MHz (RANGE=01)	—	300	—	µA	
	• 16 MHz	—	950	—	µA	
		—	1.2	—	mA	

Table continues on the next page...

Table 19. Oscillator DC electrical specifications (continued)

Symbol	Description	Min.	Typ.	Max.	Unit	Notes
	• 24 MHz • 32 MHz	—	1.5	—	mA	
I_{DDOSC}	Supply current — high gain mode (HGO=1)					1
	• 32 kHz	—	25	—	μA	
	• 4 MHz	—	400	—	μA	
	• 8 MHz (RANGE=01)	—	500	—	μA	
	• 16 MHz	—	2.5	—	mA	
	• 24 MHz	—	3	—	mA	
	• 32 MHz	—	4	—	mA	
C_x	EXTAL load capacitance	—	—	—		2, 3
C_y	XTAL load capacitance	—	—	—		2, 3
R_F	Feedback resistor — low-frequency, low-power mode (HGO=0)	—	—	—	MΩ	2, 4
	Feedback resistor — low-frequency, high-gain mode (HGO=1)	—	10	—	MΩ	
	Feedback resistor — high-frequency, low-power mode (HGO=0)	—	—	—	MΩ	
	Feedback resistor — high-frequency, high-gain mode (HGO=1)	—	1	—	MΩ	
R_S	Series resistor — low-frequency, low-power mode (HGO=0)	—	—	—	kΩ	
	Series resistor — low-frequency, high-gain mode (HGO=1)	—	200	—	kΩ	
	Series resistor — high-frequency, low-power mode (HGO=0)	—	—	—	kΩ	
	Series resistor — high-frequency, high-gain mode (HGO=1)	—	0	—	kΩ	
V_{pp}[5]	Peak-to-peak amplitude of oscillation (oscillator mode) — low-frequency, low-power mode (HGO=0)	—	0.6	—	V	
	Peak-to-peak amplitude of oscillation (oscillator mode) — low-frequency, high-gain mode (HGO=1)	—	V_{DD}	—	V	
	Peak-to-peak amplitude of oscillation (oscillator mode) — high-frequency, low-power mode (HGO=0)	—	0.6	—	V	
	Peak-to-peak amplitude of oscillation (oscillator mode) — high-frequency, high-gain mode (HGO=1)	—	V_{DD}	—	V	

1. V_{DD}=3.3 V, Temperature =25 °C
2. See crystal or resonator manufacturer's recommendation

3. C_x,C_y can be provided by using the integrated capacitors when the low frequency oscillator (RANGE = 00) is used. For all other cases external capacitors must be used.
4. When low power mode is selected, R_F is integrated and must not be attached externally.
5. The EXTAL and XTAL pins should only be connected to required oscillator components and must not be connected to any other devices.

3.3.2.2 Oscillator frequency specifications

Table 20. Oscillator frequency specifications

Symbol	Description	Min.	Typ.	Max.	Unit	Notes
f_{osc_lo}	Oscillator crystal or resonator frequency — low-frequency mode (MCG_C2[RANGE]=00)	32	—	40	kHz	
$f_{osc_hi_1}$	Oscillator crystal or resonator frequency — high-frequency mode (low range) (MCG_C2[RANGE]=01)	3	—	8	MHz	
$f_{osc_hi_2}$	Oscillator crystal or resonator frequency — high frequency mode (high range) (MCG_C2[RANGE]=1x)	8	—	32	MHz	
f_{ec_extal}	Input clock frequency (external clock mode)	—	—	48	MHz	1, 2
t_{dc_extal}	Input clock duty cycle (external clock mode)	40	50	60	%	
t_{cst}	Crystal startup time — 32 kHz low-frequency, low-power mode (HGO=0)	—	750	—	ms	3, 4
	Crystal startup time — 32 kHz low-frequency, high-gain mode (HGO=1)	—	250	—	ms	
	Crystal startup time — 8 MHz high-frequency (MCG_C2[RANGE]=01), low-power mode (HGO=0)	—	0.6	—	ms	
	Crystal startup time — 8 MHz high-frequency (MCG_C2[RANGE]=01), high-gain mode (HGO=1)	—	1	—	ms	

1. Other frequency limits may apply when external clock is being used as a reference for the FLL
2. When transitioning from FEI or FBI to FBE mode, restrict the frequency of the input clock so that, when it is divided by FRDIV, it remains within the limits of the DCO input clock frequency.
3. Proper PC board layout procedures must be followed to achieve specifications.
4. Crystal startup time is defined as the time between the oscillator being enabled and the OSCINIT bit in the MCG_S register being set.

3.4 Memories and memory interfaces

3.4.1 Flash electrical specifications

This section describes the electrical characteristics of the flash memory module.

3.4.1.1 Flash timing specifications — program and erase

The following specifications represent the amount of time the internal charge pumps are active and do not include command overhead.

Table 21. NVM program/erase timing specifications

Symbol	Description	Min.	Typ.	Max.	Unit	Notes
t_{hvpgm4}	Longword Program high-voltage time	—	7.5	18	μs	—
$t_{hversscr}$	Sector Erase high-voltage time	—	13	113	ms	1
$t_{hversall}$	Erase All high-voltage time	—	52	452	ms	1

1. Maximum time based on expectations at cycling end-of-life.

3.4.1.2 Flash timing specifications — commands

Table 22. Flash command timing specifications

Symbol	Description	Min.	Typ.	Max.	Unit	Notes
$t_{rd1sec1k}$	Read 1s Section execution time (flash sector)	—	—	60	μs	1
t_{pgmchk}	Program Check execution time	—	—	45	μs	1
t_{rdrsrc}	Read Resource execution time	—	—	30	μs	1
t_{pgm4}	Program Longword execution time	—	65	145	μs	—
t_{ersscr}	Erase Flash Sector execution time	—	14	114	ms	2
t_{rd1all}	Read 1s All Blocks execution time	—	—	1.8	ms	—
t_{rdonce}	Read Once execution time	—	—	25	μs	1
$t_{pgmonce}$	Program Once execution time	—	65	—	μs	—
t_{ersall}	Erase All Blocks execution time	—	88	650	ms	2
t_{vfykey}	Verify Backdoor Access Key execution time	—	—	30	μs	1

1. Assumes 25 MHz flash clock frequency.
2. Maximum times for erase parameters based on expectations at cycling end-of-life.

3.4.1.3 Flash high voltage current behaviors

Table 23. Flash high voltage current behaviors

Symbol	Description	Min.	Typ.	Max.	Unit
I_{DD_PGM}	Average current adder during high voltage flash programming operation	—	2.5	6.0	mA
I_{DD_ERS}	Average current adder during high voltage flash erase operation	—	1.5	4.0	mA

3.4.1.4 Reliability specifications

Table 24. NVM reliability specifications

Symbol	Description	Min.	Typ.[1]	Max.	Unit	Notes
Program Flash						
$t_{nvmretp10k}$	Data retention after up to 10 K cycles	5	50	—	years	—
$t_{nvmretp1k}$	Data retention after up to 1 K cycles	20	100	—	years	—
$n_{nvmcycp}$	Cycling endurance	10 K	50 K	—	cycles	2

1. Typical data retention values are based on measured response accelerated at high temperature and derated to a constant 25 °C use profile. Engineering Bulletin EB618 does not apply to this technology. Typical endurance defined in Engineering Bulletin EB619.
2. Cycling endurance represents number of program/erase cycles at -40 °C ≤ T_j ≤ 125 °C.

3.5 Security and integrity modules

There are no specifications necessary for the device's security and integrity modules.

3.6 Analog

3.6.1 ADC electrical specifications

The 16-bit accuracy specifications listed in Table 25 and Table 26 are achievable on the differential pins ADCx_DP0, ADCx_DM0.

All other ADC channels meet the 13-bit differential/12-bit single-ended accuracy specifications.

3.6.1.1 16-bit ADC operating conditions

Table 25. 16-bit ADC operating conditions

Symbol	Description	Conditions	Min.	Typ.[1]	Max.	Unit	Notes
V_{DDA}	Supply voltage	Absolute	1.71	—	3.6	V	—
ΔV_{DDA}	Supply voltage	Delta to V_{DD} ($V_{DD} – V_{DDA}$)	-100	0	+100	mV	2
ΔV_{SSA}	Ground voltage	Delta to V_{SS} ($V_{SS} – V_{SSA}$)	-100	0	+100	mV	2
V_{REFH}	ADC reference voltage high		1.13	V_{DDA}	V_{DDA}	V	3
V_{REFL}	ADC reference voltage low		V_{SSA}	V_{SSA}	V_{SSA}	V	3

Table continues on the next page...

Table 25. 16-bit ADC operating conditions (continued)

Symbol	Description	Conditions	Min.	Typ.[1]	Max.	Unit	Notes
V_{ADIN}	Input voltage	• 16-bit differential mode • All other modes	VREFL VREFL	— —	31/32 * VREFH VREFH	V	—
C_{ADIN}	Input capacitance	• 16-bit mode • 8-bit / 10-bit / 12-bit modes	— —	8 4	10 5	pF	—
R_{ADIN}	Input series resistance		—	2	5	kΩ	—
R_{AS}	Analog source resistance (external)	13-bit / 12-bit modes f_{ADCK} < 4 MHz	—	—	5	kΩ	4
f_{ADCK}	ADC conversion clock frequency	≤ 13-bit mode	1.0	—	18.0	MHz	5
f_{ADCK}	ADC conversion clock frequency	16-bit mode	2.0	—	12.0	MHz	5
C_{rate}	ADC conversion rate	≤ 13-bit modes No ADC hardware averaging Continuous conversions enabled, subsequent conversion time	20.000	—	818.330	Ksps	6
C_{rate}	ADC conversion rate	16-bit mode No ADC hardware averaging Continuous conversions enabled, subsequent conversion time	37.037	—	461.467	Ksps	6

1. Typical values assume V_{DDA} = 3.0 V, Temp = 25 °C, f_{ADCK} = 1.0 MHz, unless otherwise stated. Typical values are for reference only, and are not tested in production.
2. DC potential difference.
3. For packages without dedicated VREFH and VREFL pins, V_{REFH} is internally tied to V_{DDA}, and V_{REFL} is internally tied to V_{SSA}.
4. This resistance is external to MCU. To achieve the best results, the analog source resistance must be kept as low as possible. The results in this data sheet were derived from a system that had < 8 Ω analog source resistance. The R_{AS}/C_{AS} time constant should be kept to < 1 ns.
5. To use the maximum ADC conversion clock frequency, CFG2[ADHSC] must be set and CFG1[ADLPC] must be clear.
6. For guidelines and examples of conversion rate calculation, download the ADC calculator tool.

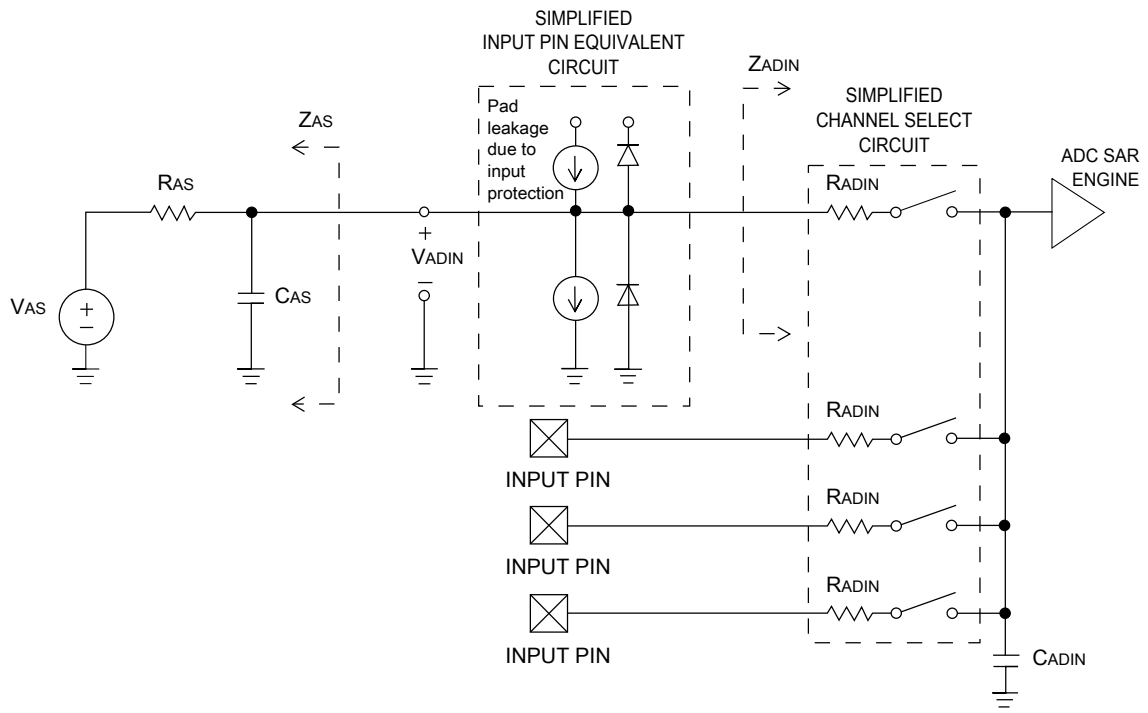

Figure 7. ADC input impedance equivalency diagram

3.6.1.2 16-bit ADC electrical characteristics

Table 26. 16-bit ADC characteristics ($V_{REFH} = V_{DDA}$, $V_{REFL} = V_{SSA}$)

Symbol	Description	Conditions[1]	Min.	Typ.[2]	Max.	Unit	Notes
I_{DDA_ADC}	Supply current		0.215	—	1.7	mA	3
f_{ADACK}	ADC asynchronous clock source	• ADLPC = 1, ADHSC = 0 • ADLPC = 1, ADHSC = 1 • ADLPC = 0, ADHSC = 0 • ADLPC = 0, ADHSC = 1	1.2 2.4 3.0 4.4	2.4 4.0 5.2 6.2	3.9 6.1 7.3 9.5	MHz MHz MHz MHz	$t_{ADACK} = 1/f_{ADACK}$
	Sample Time	See Reference Manual chapter for sample times					
TUE	Total unadjusted error	• 12-bit modes • <12-bit modes	— —	±4 ±1.4	±6.8 ±2.1	LSB[4]	5
DNL	Differential non-linearity	• 12-bit modes • <12-bit modes	— —	±0.7 ±0.2	–1.1 to +1.9 –0.3 to 0.5	LSB[4]	5

Table continues on the next page...

Table 26. 16-bit ADC characteristics ($V_{REFH} = V_{DDA}$, $V_{REFL} = V_{SSA}$) (continued)

Symbol	Description	Conditions[1]	Min.	Typ.[2]	Max.	Unit	Notes
INL	Integral non-linearity	• 12-bit modes • <12-bit modes	— —	±1.0 ±0.5	–2.7 to +1.9 –0.7 to +0.5	LSB[4]	5
E_{FS}	Full-scale error	• 12-bit modes • <12-bit modes	— —	–4 –1.4	–5.4 –1.8	LSB[4]	$V_{ADIN} = V_{DDA}$[5]
E_Q	Quantization error	• 16-bit modes • ≤13-bit modes	— —	–1 to 0 —	— ±0.5	LSB[4]	
ENOB	Effective number of bits	16-bit differential mode • Avg = 32 • Avg = 4 16-bit single-ended mode • Avg = 32 • Avg = 4	12.8 11.9 12.2 11.4	14.5 13.8 13.9 13.1	— — — —	bits bits bits bits	6
SINAD	Signal-to-noise plus distortion	See ENOB	6.02 × ENOB + 1.76			dB	
THD	Total harmonic distortion	16-bit differential mode • Avg = 32 16-bit single-ended mode • Avg = 32	— —	-94 -85	— —	dB dB	7
SFDR	Spurious free dynamic range	16-bit differential mode • Avg = 32 16-bit single-ended mode • Avg = 32	82 78	95 90	— —	dB dB	7
E_{IL}	Input leakage error		$I_{In} \times R_{AS}$			mV	I_{In} = leakage current (refer to the MCU's voltage and current operating ratings)
	Temp sensor slope	Across the full temperature range of the device	1.55	1.62	1.69	mV/°C	8
V_{TEMP25}	Temp sensor voltage	25 °C	706	716	726	mV	8

1. All accuracy numbers assume the ADC is calibrated with $V_{REFH} = V_{DDA}$
2. Typical values assume V_{DDA} = 3.0 V, Temp = 25 °C, f_{ADCK} = 2.0 MHz unless otherwise stated. Typical values are for reference only and are not tested in production.
3. The ADC supply current depends on the ADC conversion clock speed, conversion rate and ADC_CFG1[ADLPC] (low power). For lowest power operation, ADC_CFG1[ADLPC] must be set, the ADC_CFG2[ADHSC] bit must be clear with 1 MHz ADC conversion clock speed.
4. 1 LSB = $(V_{REFH} - V_{REFL})/2^N$
5. ADC conversion clock < 16 MHz, Max hardware averaging (AVGE = %1, AVGS = %11)
6. Input data is 100 Hz sine wave. ADC conversion clock < 12 MHz.
7. Input data is 1 kHz sine wave. ADC conversion clock < 12 MHz.
8. ADC conversion clock < 3 MHz

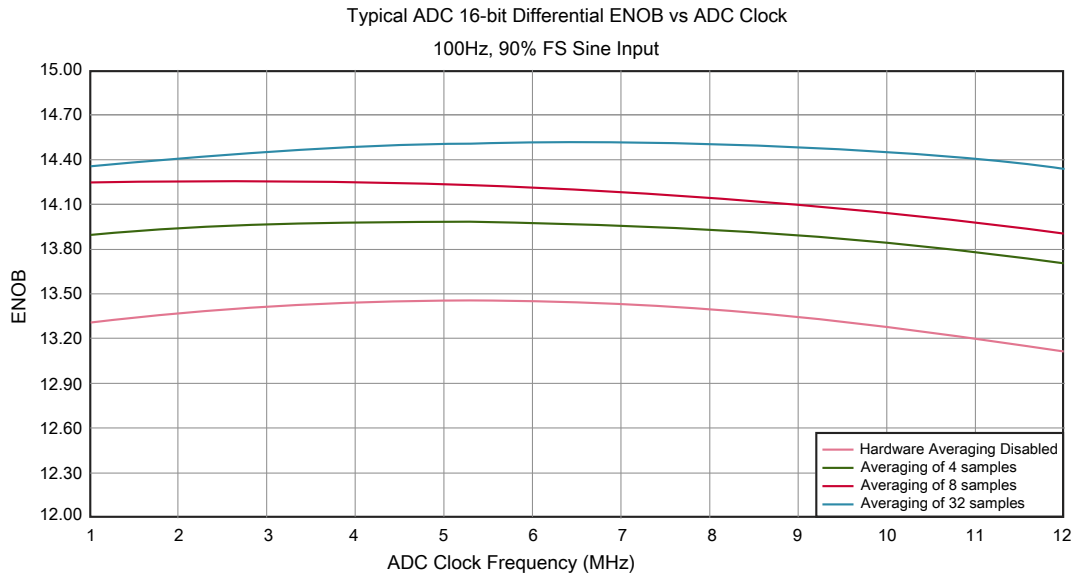

Figure 8. Typical ENOB vs. ADC_CLK for 16-bit differential mode

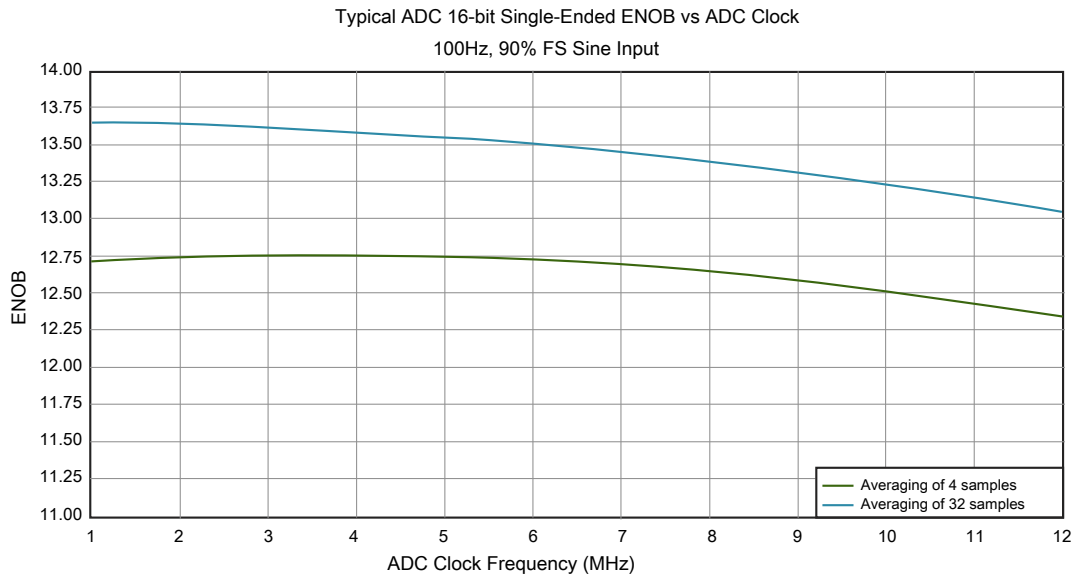

Figure 9. Typical ENOB vs. ADC_CLK for 16-bit single-ended mode

3.6.2 CMP and 6-bit DAC electrical specifications

Table 27. Comparator and 6-bit DAC electrical specifications

Symbol	Description	Min.	Typ.	Max.	Unit
V_{DD}	Supply voltage	1.71	—	3.6	V
I_{DDHS}	Supply current, high-speed mode (EN = 1, PMODE = 1)	—	—	200	μA
I_{DDLS}	Supply current, low-speed mode (EN = 1, PMODE = 0)	—	—	20	μA
V_{AIN}	Analog input voltage	V_{SS}	—	V_{DD}	V
V_{AIO}	Analog input offset voltage	—	—	20	mV
V_H	Analog comparator hysteresis[1]				
	• CR0[HYSTCTR] = 00	—	5	—	mV
	• CR0[HYSTCTR] = 01	—	10	—	mV
	• CR0[HYSTCTR] = 10	—	20	—	mV
	• CR0[HYSTCTR] = 11	—	30	—	mV
V_{CMPOh}	Output high	$V_{DD} – 0.5$	—	—	V
V_{CMPOl}	Output low	—	—	0.5	V
t_{DHS}	Propagation delay, high-speed mode (EN = 1, PMODE = 1)	20	50	200	ns
t_{DLS}	Propagation delay, low-speed mode (EN = 1, PMODE = 0)	80	250	600	ns
	Analog comparator initialization delay[2]	—	—	40	μs
I_{DAC6b}	6-bit DAC current adder (enabled)	—	7	—	μA
INL	6-bit DAC integral non-linearity	–0.5	—	0.5	LSB[3]
DNL	6-bit DAC differential non-linearity	–0.3	—	0.3	LSB

1. Typical hysteresis is measured with input voltage range limited to 0.7 to $V_{DD} – 0.7$ V.
2. Comparator initialization delay is defined as the time between software writes to change control inputs (writes to DACEN, VRSEL, PSEL, MSEL, VOSEL) and the comparator output settling to a stable level.
3. 1 LSB = $V_{reference}/64$

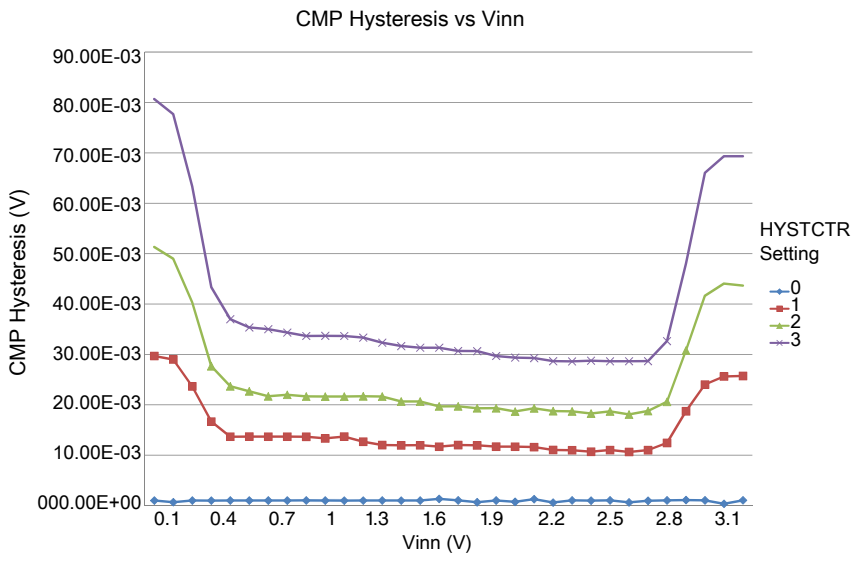

Figure 10. Typical hysteresis vs. Vin level (V_{DD} = 3.3 V, PMODE = 0)

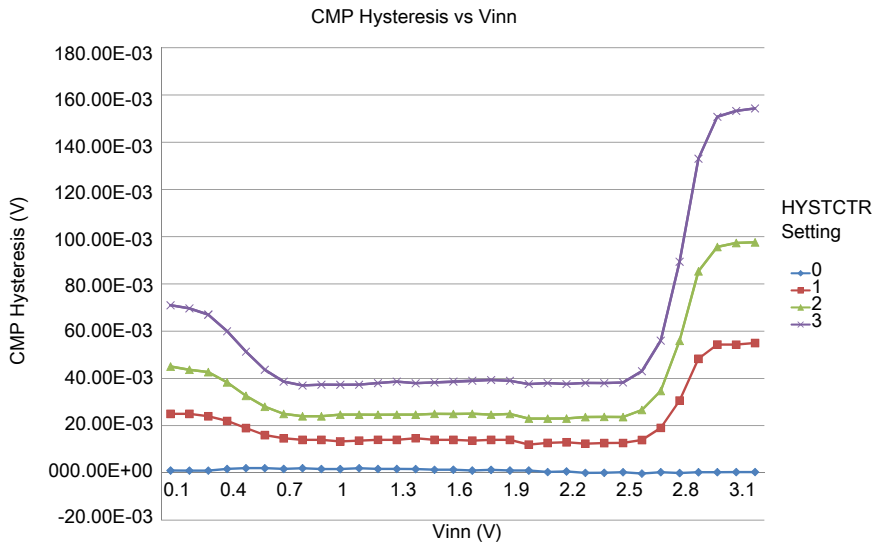

Figure 11. Typical hysteresis vs. Vin level (V_{DD} = 3.3 V, PMODE = 1)

3.6.3 12-bit DAC electrical characteristics

3.6.3.1 12-bit DAC operating requirements

Table 28. 12-bit DAC operating requirements

Symbol	Desciption	Min.	Max.	Unit	Notes
V_{DDA}	Supply voltage	1.71	3.6	V	
V_{DACR}	Reference voltage	1.13	3.6	V	1
C_L	Output load capacitance	—	100	pF	2
I_L	Output load current	—	1	mA	

1. The DAC reference can be selected to be V_{DDA} or V_{REFH}.
2. A small load capacitance (47 pF) can improve the bandwidth performance of the DAC.

3.6.3.2 12-bit DAC operating behaviors

Table 29. 12-bit DAC operating behaviors

Symbol	Description	Min.	Typ.	Max.	Unit	Notes
I_{DDA_DACLP}	Supply current — low-power mode	—	—	250	μA	
I_{DDA_DACHP}	Supply current — high-speed mode	—	—	900	μA	
t_{DACLP}	Full-scale settling time (0x080 to 0xF7F) — low-power mode	—	100	200	μs	1
t_{DACHP}	Full-scale settling time (0x080 to 0xF7F) — high-power mode	—	15	30	μs	1
$t_{CCDACLP}$	Code-to-code settling time (0xBF8 to 0xC08) — low-power mode and high-speed mode	—	0.7	1	μs	1
$V_{dacoutl}$	DAC output voltage range low — high-speed mode, no load, DAC set to 0x000	—	—	100	mV	
$V_{dacouth}$	DAC output voltage range high — high-speed mode, no load, DAC set to 0xFFF	V_{DACR} −100	—	V_{DACR}	mV	
INL	Integral non-linearity error — high speed mode	—	—	±8	LSB	2
DNL	Differential non-linearity error — V_{DACR} > 2 V	—	—	±1	LSB	3
DNL	Differential non-linearity error — V_{DACR} = VREF_OUT	—	—	±1	LSB	4
V_{OFFSET}	Offset error	—	±0.4	±0.8	%FSR	5
E_G	Gain error	—	±0.1	±0.6	%FSR	5
PSRR	Power supply rejection ratio, V_{DDA} ≥ 2.4 V	60	—	90	dB	
T_{CO}	Temperature coefficient offset voltage	—	3.7	—	μV/C	6
T_{GE}	Temperature coefficient gain error	—	0.000421	—	%FSR/C	
Rop	Output resistance (load = 3 kΩ)	—	—	250	Ω	
SR	Slew rate -80h→ F7Fh→ 80h	1.2	1.7	—	V/μs	

Table continues on the next page...

Table 29. 12-bit DAC operating behaviors (continued)

Symbol	Description	Min.	Typ.	Max.	Unit	Notes
	• High power (SP_{HP}) • Low power (SP_{LP})	0.05	0.12	—		
BW	3dB bandwidth • High power (SP_{HP}) • Low power (SP_{LP})	 550 40	 — —	 — —	kHz	

1. Settling within ±1 LSB
2. The INL is measured for 0 + 100 mV to V_{DACR} −100 mV
3. The DNL is measured for 0 + 100 mV to V_{DACR} −100 mV
4. The DNL is measured for 0 + 100 mV to V_{DACR} −100 mV with V_{DDA} > 2.4 V
5. Calculated by a best fit curve from V_{SS} + 100 mV to V_{DACR} − 100 mV
6. V_{DDA} = 3.0 V, reference select set for V_{DDA} (DACx_CO:DACRFS = 1), high power mode (DACx_C0:LPEN = 0), DAC set to 0x800, temperature range is across the full range of the device

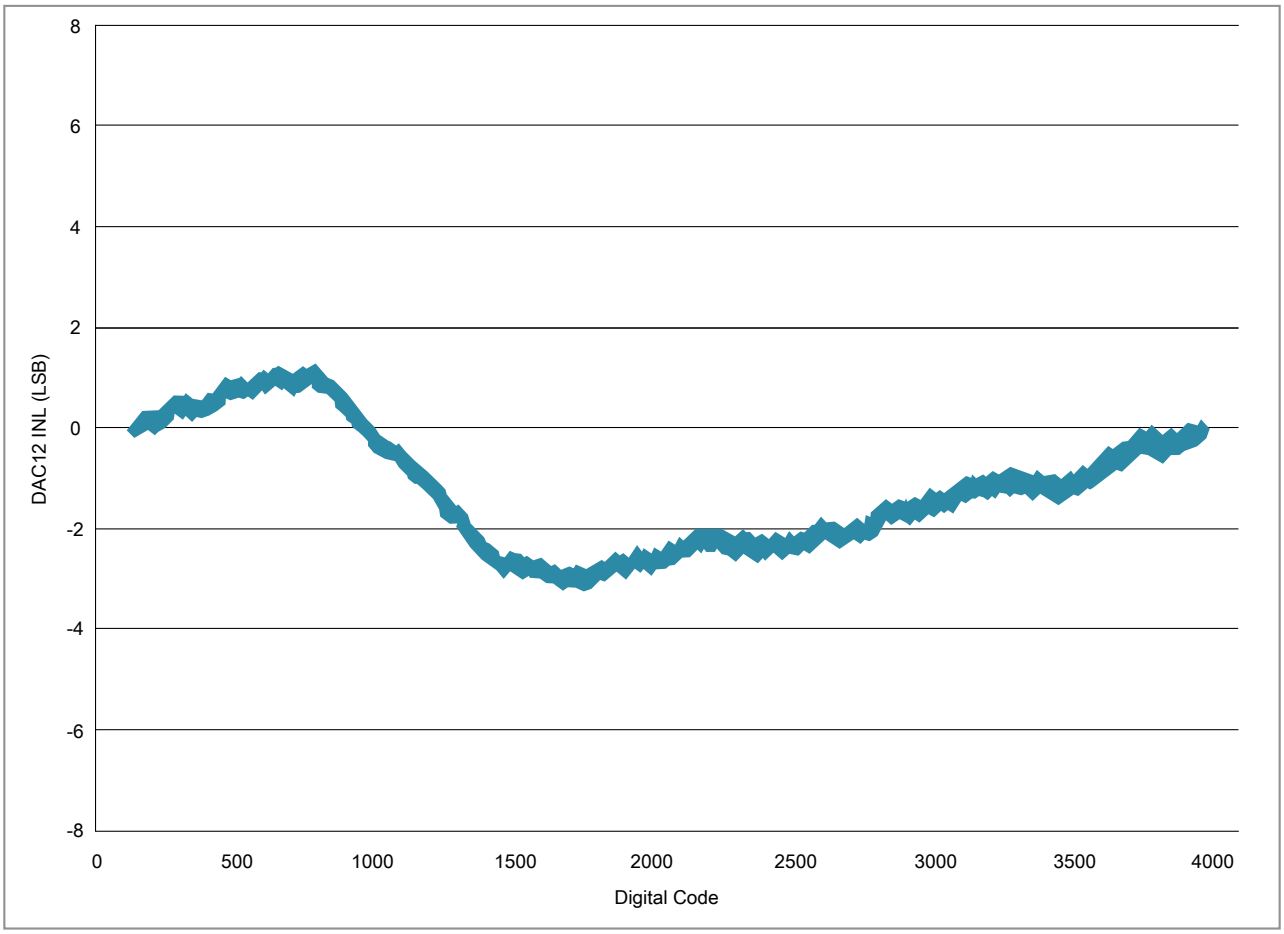

Figure 12. Typical INL error vs. digital code

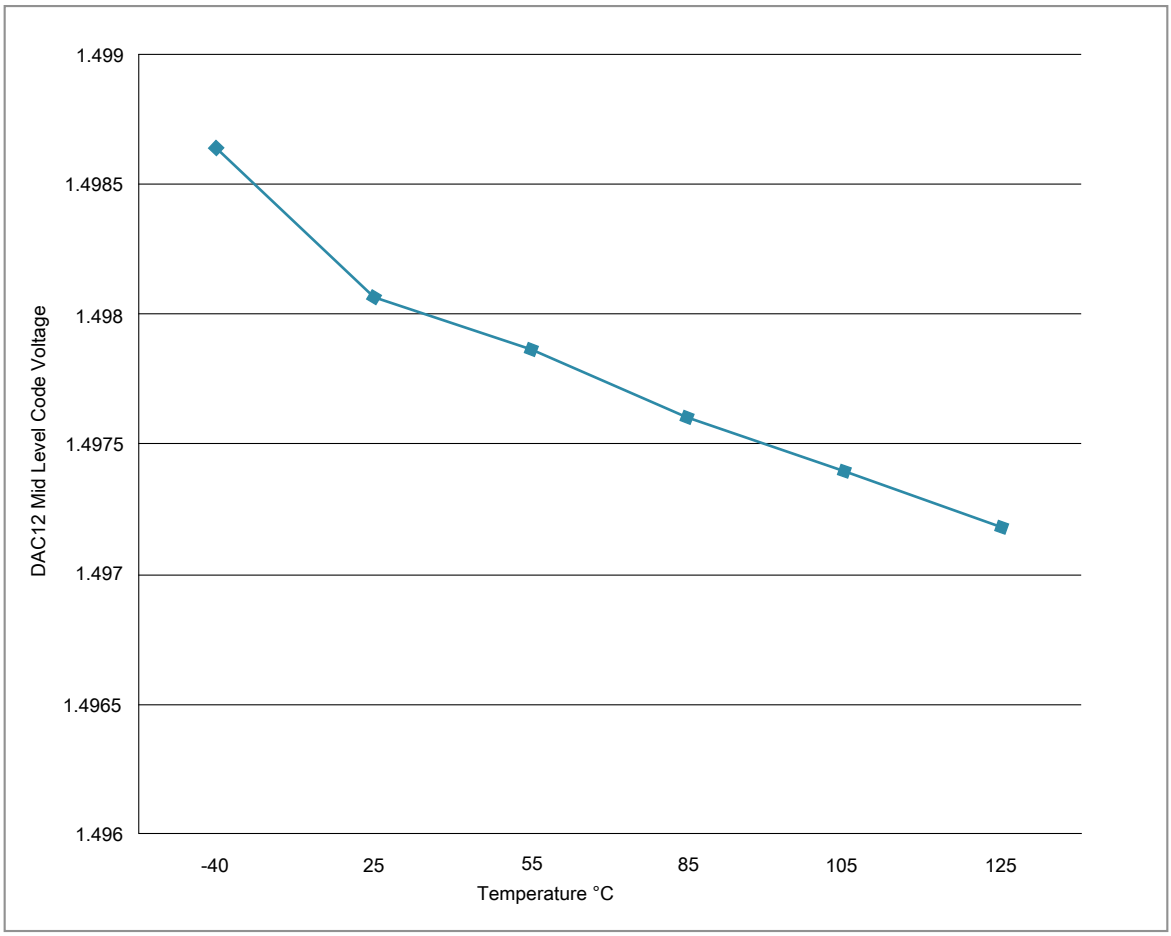

Figure 13. Offset at half scale vs. temperature

3.7 Timers

See General switching specifications.

3.8 Communication interfaces

3.8.1 SPI switching specifications

The Serial Peripheral Interface (SPI) provides a synchronous serial bus with master and slave operations. Many of the transfer attributes are programmable. The following tables provide timing characteristics for classic SPI timing modes. See the SPI chapter of the chip's Reference Manual for information about the modified transfer formats used for communicating with slower peripheral devices.

All timing is shown with respect to 20% V_{DD} and 80% V_{DD} thresholds, unless noted, as well as input signal transitions of 3 ns and a 30 pF maximum load on all SPI pins.

Table 30. SPI master mode timing on slew rate disabled pads

Num.	Symbol	Description	Min.	Max.	Unit	Note
1	f_{op}	Frequency of operation	$f_{periph}/2048$	$f_{periph}/2$	Hz	1
2	t_{SPSCK}	SPSCK period	2 x t_{periph}	2048 x t_{periph}	ns	2
3	t_{Lead}	Enable lead time	1/2	—	t_{SPSCK}	—
4	t_{Lag}	Enable lag time	1/2	—	t_{SPSCK}	—
5	t_{WSPSCK}	Clock (SPSCK) high or low time	t_{periph} – 30	1024 x t_{periph}	ns	—
6	t_{SU}	Data setup time (inputs)	16	—	ns	—
7	t_{HI}	Data hold time (inputs)	0	—	ns	—
8	t_v	Data valid (after SPSCK edge)	—	10	ns	—
9	t_{HO}	Data hold time (outputs)	0	—	ns	—
10	t_{RI}	Rise time input	—	t_{periph} – 25	ns	—
	t_{FI}	Fall time input				
11	t_{RO}	Rise time output	—	25	ns	—
	t_{FO}	Fall time output				

1. For SPI0, f_{periph} is the bus clock (f_{BUS}). For SPI1 f_{periph} is the system clock (f_{SYS}).
2. $t_{periph} = 1/f_{periph}$

Table 31. SPI master mode timing on slew rate enabled pads

Num.	Symbol	Description	Min.	Max.	Unit	Note
1	f_{op}	Frequency of operation	$f_{periph}/2048$	$f_{periph}/2$	Hz	1
2	t_{SPSCK}	SPSCK period	2 x t_{periph}	2048 x t_{periph}	ns	2
3	t_{Lead}	Enable lead time	1/2	—	t_{SPSCK}	—
4	t_{Lag}	Enable lag time	1/2	—	t_{SPSCK}	—
5	t_{WSPSCK}	Clock (SPSCK) high or low time	t_{periph} – 30	1024 x t_{periph}	ns	—
6	t_{SU}	Data setup time (inputs)	96	—	ns	—

Table continues on the next page...

Table 31. SPI master mode timing on slew rate enabled pads (continued)

Num.	Symbol	Description	Min.	Max.	Unit	Note
7	t_{HI}	Data hold time (inputs)	0	—	ns	—
8	t_v	Data valid (after SPSCK edge)	—	52	ns	—
9	t_{HO}	Data hold time (outputs)	0	—	ns	—
10	t_{RI}	Rise time input	—	$t_{periph} - 25$	ns	—
	t_{FI}	Fall time input				
11	t_{RO}	Rise time output	—	36	ns	—
	t_{FO}	Fall time output				

1. For SPI0, f_{periph} is the bus clock (f_{BUS}). For SPI1 f_{periph} is the system clock (f_{SYS}).
2. $t_{periph} = 1/f_{periph}$

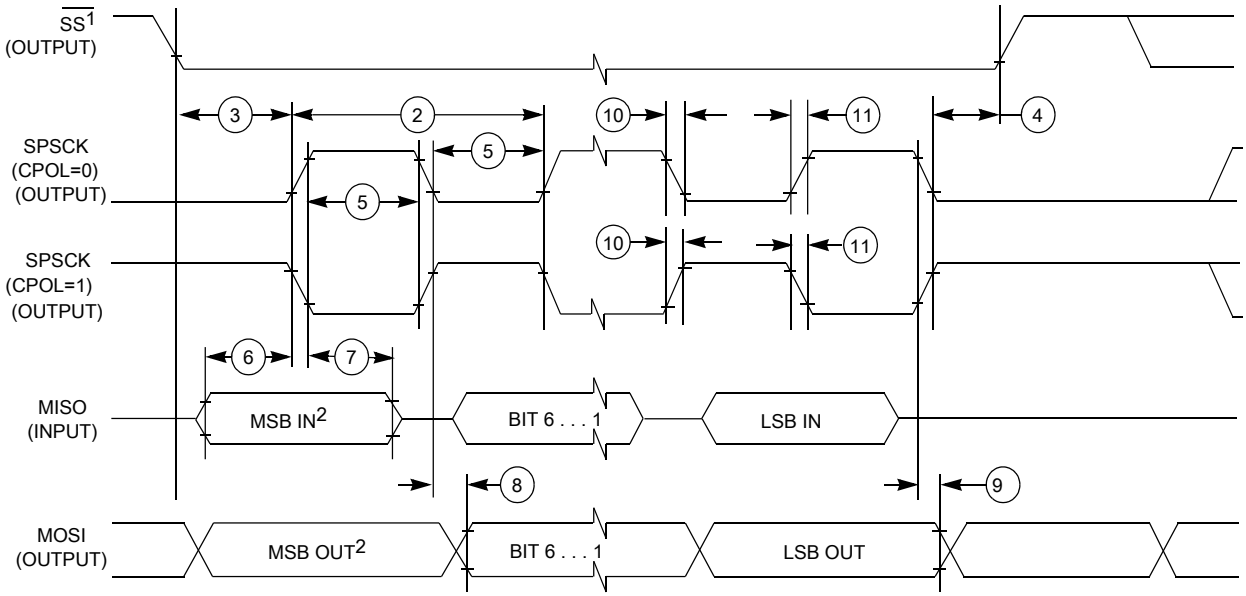

1. If configured as an output.
2. LSBF = 0. For LSBF = 1, bit order is LSB, bit 1, ..., bit 6, MSB.

Figure 14. SPI master mode timing (CPHA = 0)

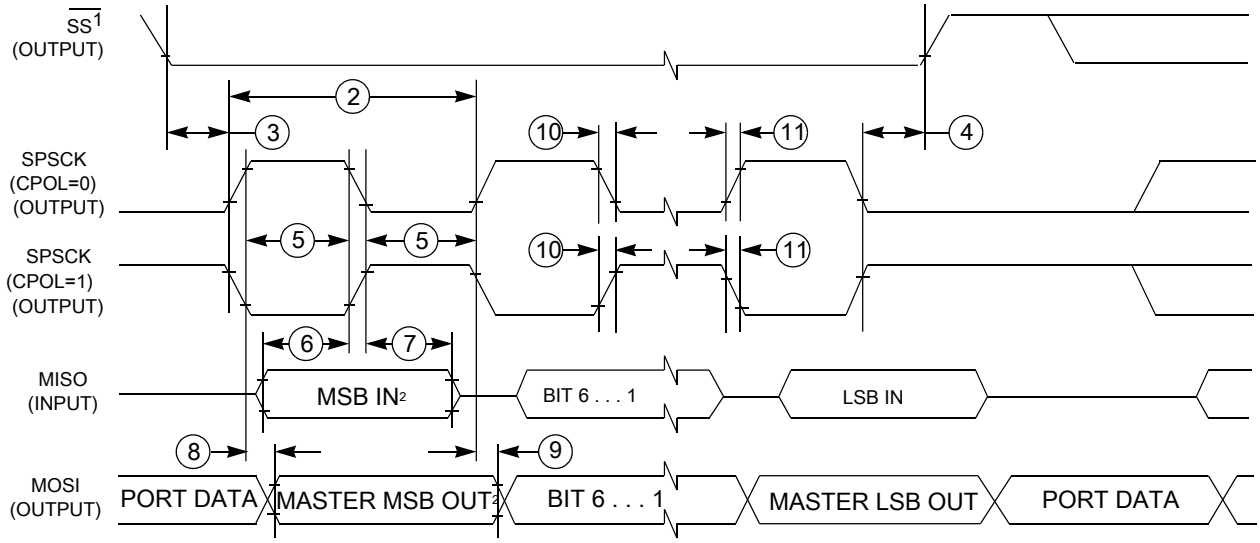

1.If configured as output

2. LSBF = 0. For LSBF = 1, bit order is LSB, bit 1, ..., bit 6, MSB.

Figure 15. SPI master mode timing (CPHA = 1)

Table 32. SPI slave mode timing on slew rate disabled pads

Num.	Symbol	Description	Min.	Max.	Unit	Note
1	f_{op}	Frequency of operation	0	$f_{periph}/4$	Hz	1
2	t_{SPSCK}	SPSCK period	4 x t_{periph}	—	ns	2
3	t_{Lead}	Enable lead time	1	—	t_{periph}	—
4	t_{Lag}	Enable lag time	1	—	t_{periph}	—
5	t_{WSPSCK}	Clock (SPSCK) high or low time	t_{periph} – 30	—	ns	—
6	t_{SU}	Data setup time (inputs)	2	—	ns	—
7	t_{HI}	Data hold time (inputs)	7	—	ns	—
8	t_a	Slave access time	—	t_{periph}	ns	3
9	t_{dis}	Slave MISO disable time	—	t_{periph}	ns	4
10	t_v	Data valid (after SPSCK edge)	—	22	ns	—
11	t_{HO}	Data hold time (outputs)	0	—	ns	—
12	t_{RI}	Rise time input	—	t_{periph} – 25	ns	—
	t_{FI}	Fall time input				
13	t_{RO}	Rise time output	—	25	ns	—
	t_{FO}	Fall time output				

1. For SPI0, f_{periph} is the bus clock (f_{BUS}). For SPI1 f_{periph} is the system clock (f_{SYS}).
2. $t_{periph} = 1/f_{periph}$
3. Time to data active from high-impedance state
4. Hold time to high-impedance state

Table 33. SPI slave mode timing on slew rate enabled pads

Num.	Symbol	Description	Min.	Max.	Unit	Note
1	f_{op}	Frequency of operation	0	$f_{periph}/4$	Hz	1
2	t_{SPSCK}	SPSCK period	4 x t_{periph}	—	ns	2
3	t_{Lead}	Enable lead time	1	—	t_{periph}	—
4	t_{Lag}	Enable lag time	1	—	t_{periph}	—
5	t_{WSPSCK}	Clock (SPSCK) high or low time	t_{periph} – 30	—	ns	—
6	t_{SU}	Data setup time (inputs)	2	—	ns	—
7	t_{HI}	Data hold time (inputs)	7	—	ns	—
8	t_a	Slave access time	—	t_{periph}	ns	3
9	t_{dis}	Slave MISO disable time	—	t_{periph}	ns	4
10	t_v	Data valid (after SPSCK edge)	—	122	ns	—
11	t_{HO}	Data hold time (outputs)	0	—	ns	—
12	t_{RI}	Rise time input	—	t_{periph} – 25	ns	—
	t_{FI}	Fall time input				
13	t_{RO}	Rise time output	—	36	ns	—
	t_{FO}	Fall time output				

1. For SPI0, f_{periph} is the bus clock (f_{BUS}). For SPI1 f_{periph} is the system clock (f_{SYS}).
2. $t_{periph} = 1/f_{periph}$
3. Time to data active from high-impedance state
4. Hold time to high-impedance state

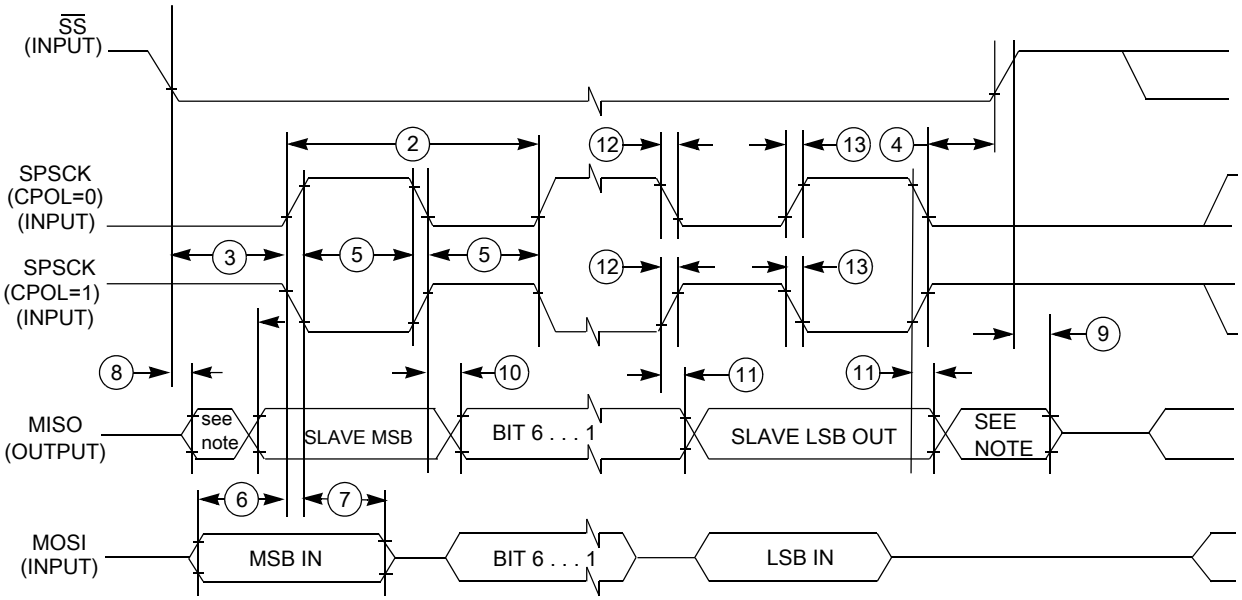

NOTE: Not defined

Figure 16. SPI slave mode timing (CPHA = 0)

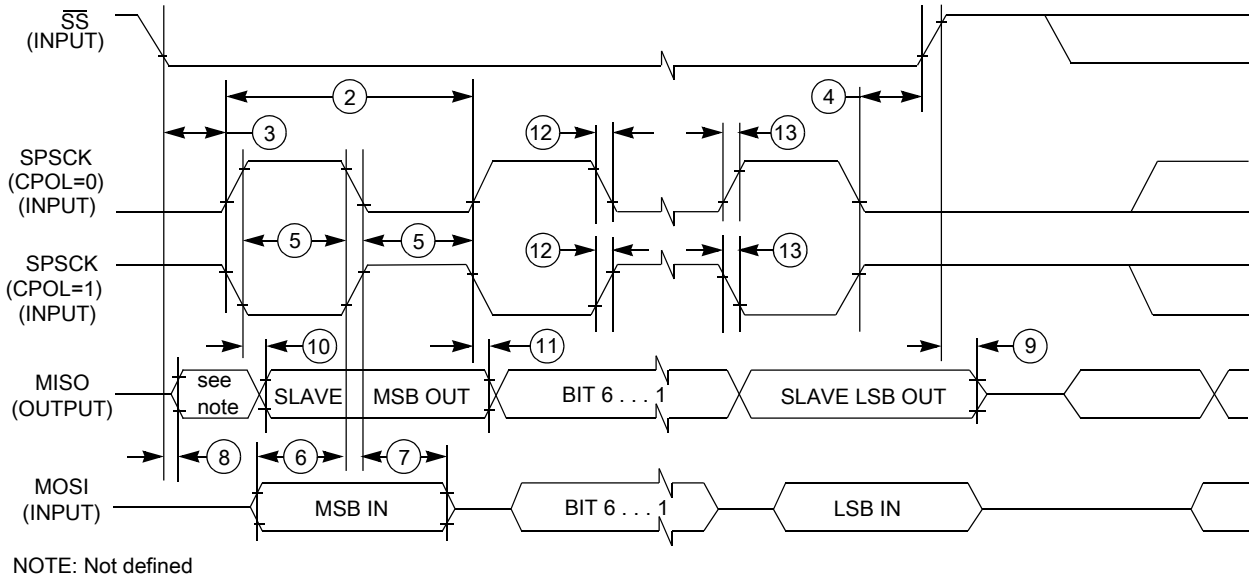

Figure 17. SPI slave mode timing (CPHA = 1)

3.8.2 Inter-Integrated Circuit Interface (I2C) timing

Table 34. I2C timing

Characteristic	Symbol	Standard Mode		Fast Mode		Unit
		Minimum	Maximum	Minimum	Maximum	
SCL Clock Frequency	f_{SCL}	0	100	0	400[1]	kHz
Hold time (repeated) START condition. After this period, the first clock pulse is generated.	t_{HD}; STA	4	—	0.6	—	μs
LOW period of the SCL clock	t_{LOW}	4.7	—	1.3	—	μs
HIGH period of the SCL clock	t_{HIGH}	4	—	0.6	—	μs
Set-up time for a repeated START condition	t_{SU}; STA	4.7	—	0.6	—	μs
Data hold time for I^2C bus devices	t_{HD}; DAT	0[2]	3.45[3]	0[4]	0.9[2]	μs
Data set-up time	t_{SU}; DAT	250[5]	—	100[3], [6]	—	ns
Rise time of SDA and SCL signals	t_r	—	1000	20 +0.1C_b[7]	300	ns
Fall time of SDA and SCL signals	t_f	—	300	20 +0.1C_b[6]	300	ns
Set-up time for STOP condition	t_{SU}; STO	4	—	0.6	—	μs
Bus free time between STOP and START condition	t_{BUF}	4.7	—	1.3	—	μs
Pulse width of spikes that must be suppressed by the input filter	t_{SP}	N/A	N/A	0	50	ns

1. The maximum SCL Clock Frequency in Fast mode with maximum bus loading can only achieved when using the High drive pins (see Voltage and current operating behaviors) or when using the Normal drive pins and VDD ≥ 2.7 V

2. The master mode I²C deasserts ACK of an address byte simultaneously with the falling edge of SCL. If no slaves acknowledge this address byte, then a negative hold time can result, depending on the edge rates of the SDA and SCL lines.
3. The maximum tHD; DAT must be met only if the device does not stretch the LOW period (tLOW) of the SCL signal.
4. Input signal Slew = 10 ns and Output Load = 50 pF
5. Set-up time in slave-transmitter mode is 1 IPBus clock period, if the TX FIFO is empty.
6. A Fast mode I²C bus device can be used in a Standard mode I2C bus system, but the requirement $t_{SU;\ DAT} \geq 250$ ns must then be met. This is automatically the case if the device does not stretch the LOW period of the SCL signal. If such a device does stretch the LOW period of the SCL signal, then it must output the next data bit to the SDA line $t_{rmax} + t_{SU;\ DAT} = 1000 + 250 = 1250$ ns (according to the Standard mode I²C bus specification) before the SCL line is released.
7. C_b = total capacitance of the one bus line in pF.

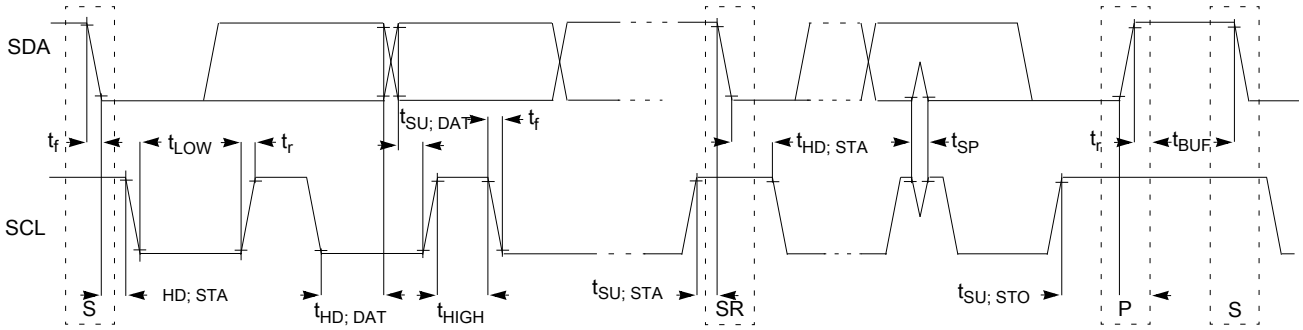

Figure 18. Timing definition for fast and standard mode devices on the I²C bus

3.8.3 UART

See General switching specifications.

3.9 Human-machine interfaces (HMI)

3.9.1 TSI electrical specifications

Table 35. TSI electrical specifications

Symbol	Description	Min.	Typ.	Max.	Unit
TSI_RUNF	Fixed power consumption in run mode	—	100	—	μA
TSI_RUNV	Variable power consumption in run mode (depends on oscillator's current selection)	1.0	—	128	μA
TSI_EN	Power consumption in enable mode	—	100	—	μA
TSI_DIS	Power consumption in disable mode	—	1.2	—	μA
TSI_TEN	TSI analog enable time	—	66	—	μs
TSI_CREF	TSI reference capacitor	—	1.0	—	pF
TSI_DVOLT	Voltage variation of VP & VM around nominal values	0.19	—	1.03	V

4 Dimensions

4.1 Obtaining package dimensions

Package dimensions are provided in package drawings.

To find a package drawing, go to **freescale.com** and perform a keyword search for the drawing's document number:

If you want the drawing for this package	Then use this document number
32-pin QFN	98ASA00473D
48-pin QFN	98ASA00466D
64-pin LQFP	98ASS23234W
80-pin LQFP	98ASS23174W

5 Pinout

5.1 KL15 Signal Multiplexing and Pin Assignments

The following table shows the signals available on each pin and the locations of these pins on the devices supported by this document. The Port Control Module is responsible for selecting which ALT functionality is available on each pin.

80 LQFP	64 LQFP	48 QFN	32 QFN	Pin Name	Default	ALT0	ALT1	ALT2	ALT3	ALT4	ALT5	ALT6	ALT7
1	1	—	1	PTE0	DISABLED		PTE0		UART1_TX	RTC_ CLKOUT	CMP0_OUT	I2C1_SDA	
2	2	—	2	PTE1	DISABLED		PTE1	SPI1_MOSI	UART1_RX		SPI1_MISO	I2C1_SCL	
3	—	—	—	PTE2	DISABLED		PTE2	SPI1_SCK					
4	—	—	—	PTE3	DISABLED		PTE3	SPI1_MISO			SPI1_MOSI		
5	—	—	—	PTE4	DISABLED		PTE4	SPI1_PCS0					
6	—	—	—	PTE5	DISABLED		PTE5						
7	3	1	—	VDD	VDD	VDD							
8	4	2	—	VSS	VSS	VSS							
9	5	3	3	PTE16	ADC0_DP1/ ADC0_SE1	ADC0_DP1/ ADC0_SE1	PTE16	SPI0_PCS0	UART2_TX	TPM_ CLKIN0			

80 LQFP	64 LQFP	48 QFN	32 QFN	Pin Name	Default	ALT0	ALT1	ALT2	ALT3	ALT4	ALT5	ALT6	ALT7
10	6	4	4	PTE17	ADC0_DM1/ ADC0_SE5a	ADC0_DM1/ ADC0_SE5a	PTE17	SPI0_SCK	UART2_RX	TPM_ CLKIN1		LPTMR0_ ALT3	
11	7	5	5	PTE18	ADC0_DP2/ ADC0_SE2	ADC0_DP2/ ADC0_SE2	PTE18	SPI0_MOSI		I2C0_SDA	SPI0_MISO		
12	8	6	6	PTE19	ADC0_DM2/ ADC0_SE6a	ADC0_DM2/ ADC0_SE6a	PTE19	SPI0_MISO		I2C0_SCL	SPI0_MOSI		
13	9	7	—	PTE20	ADC0_DP0/ ADC0_SE0	ADC0_DP0/ ADC0_SE0	PTE20		TPM1_CH0	UART0_TX			
14	10	8	—	PTE21	ADC0_DM0/ ADC0_SE4a	ADC0_DM0/ ADC0_SE4a	PTE21		TPM1_CH1	UART0_RX			
15	11	—	—	PTE22	ADC0_DP3/ ADC0_SE3	ADC0_DP3/ ADC0_SE3	PTE22		TPM2_CH0	UART2_TX			
16	12	—	—	PTE23	ADC0_DM3/ ADC0_SE7a	ADC0_DM3/ ADC0_SE7a	PTE23		TPM2_CH1	UART2_RX			
17	13	9	7	VDDA	VDDA	VDDA							
18	14	10	—	VREFH	VREFH	VREFH							
19	15	11	—	VREFL	VREFL	VREFL							
20	16	12	8	VSSA	VSSA	VSSA							
21	17	13	—	PTE29	CMP0_IN5/ ADC0_SE4b	CMP0_IN5/ ADC0_SE4b	PTE29		TPM0_CH2	TPM_ CLKIN0			
22	18	14	9	PTE30	DAC0_OUT/ ADC0_SE23/ CMP0_IN4	DAC0_OUT/ ADC0_SE23/ CMP0_IN4	PTE30		TPM0_CH3	TPM_ CLKIN1			
23	19	—	—	PTE31	DISABLED		PTE31		TPM0_CH4				
24	20	15	—	PTE24	DISABLED		PTE24		TPM0_CH0		I2C0_SCL		
25	21	16	—	PTE25	DISABLED		PTE25		TPM0_CH1		I2C0_SDA		
26	22	17	10	PTA0	SWD_CLK	TSI0_CH1	PTA0		TPM0_CH5				SWD_CLK
27	23	18	11	PTA1	DISABLED	TSI0_CH2	PTA1	UART0_RX	TPM2_CH0				
28	24	19	12	PTA2	DISABLED	TSI0_CH3	PTA2	UART0_TX	TPM2_CH1				
29	25	20	13	PTA3	SWD_DIO	TSI0_CH4	PTA3	I2C1_SCL	TPM0_CH0				SWD_DIO
30	26	21	14	PTA4	NMI_b	TSI0_CH5	PTA4	I2C1_SDA	TPM0_CH1				NMI_b
31	27	—	—	PTA5	DISABLED		PTA5		TPM0_CH2				
32	28	—	—	PTA12	DISABLED		PTA12		TPM1_CH0				
33	29	—	—	PTA13	DISABLED		PTA13		TPM1_CH1				
34	—	—	—	PTA14	DISABLED		PTA14	SPI0_PCS0	UART0_TX				
35	—	—	—	PTA15	DISABLED		PTA15	SPI0_SCK	UART0_RX				
36	—	—	—	PTA16	DISABLED		PTA16	SPI0_MOSI			SPI0_MISO		
37	—	—	—	PTA17	DISABLED		PTA17	SPI0_MISO			SPI0_MOSI		
38	30	22	15	VDD	VDD	VDD							
39	31	23	16	VSS	VSS	VSS							
40	32	24	17	PTA18	EXTAL0	EXTAL0	PTA18		UART1_RX	TPM_ CLKIN0			

80 LQFP	64 LQFP	48 QFN	32 QFN	Pin Name	Default	ALT0	ALT1	ALT2	ALT3	ALT4	ALT5	ALT6	ALT7
41	33	25	18	PTA19	XTAL0	XTAL0	PTA19		UART1_TX	TPM_ CLKIN1		LPTMR0_ ALT1	
42	34	26	19	PTA20	RESET_b		PTA20						RESET_b
43	35	27	20	PTB0/ LLWU_P5	ADC0_SE8/ TSI0_CH0	ADC0_SE8/ TSI0_CH0	PTB0/ LLWU_P5	I2C0_SCL	TPM1_CH0				
44	36	28	21	PTB1	ADC0_SE9/ TSI0_CH6	ADC0_SE9/ TSI0_CH6	PTB1	I2C0_SDA	TPM1_CH1				
45	37	29	—	PTB2	ADC0_SE12/ TSI0_CH7	ADC0_SE12/ TSI0_CH7	PTB2	I2C0_SCL	TPM2_CH0				
46	38	30	—	PTB3	ADC0_SE13/ TSI0_CH8	ADC0_SE13/ TSI0_CH8	PTB3	I2C0_SDA	TPM2_CH1				
47	—	—	—	PTB8	DISABLED		PTB8		EXTRG_IN				
48	—	—	—	PTB9	DISABLED		PTB9						
49	—	—	—	PTB10	DISABLED		PTB10	SPI1_PCS0					
50	—	—	—	PTB11	DISABLED		PTB11	SPI1_SCK					
51	39	31	—	PTB16	TSI0_CH9	TSI0_CH9	PTB16	SPI1_MOSI	UART0_RX	TPM_ CLKIN0	SPI1_MISO		
52	40	32	—	PTB17	TSI0_CH10	TSI0_CH10	PTB17	SPI1_MISO	UART0_TX	TPM_ CLKIN1	SPI1_MOSI		
53	41	—	—	PTB18	TSI0_CH11	TSI0_CH11	PTB18		TPM2_CH0				
54	42	—	—	PTB19	TSI0_CH12	TSI0_CH12	PTB19		TPM2_CH1				
55	43	33	—	PTC0	ADC0_SE14/ TSI0_CH13	ADC0_SE14/ TSI0_CH13	PTC0		EXTRG_IN		CMP0_OUT		
56	44	34	22	PTC1/ LLWU_P6/ RTC_CLKIN	ADC0_SE15/ TSI0_CH14	ADC0_SE15/ TSI0_CH14	PTC1/ LLWU_P6/ RTC_CLKIN	I2C1_SCL		TPM0_CH0			
57	45	35	23	PTC2	ADC0_SE11/ TSI0_CH15	ADC0_SE11/ TSI0_CH15	PTC2	I2C1_SDA		TPM0_CH1			
58	46	36	24	PTC3/ LLWU_P7	DISABLED		PTC3/ LLWU_P7		UART1_RX	TPM0_CH2	CLKOUT		
59	47	—	—	VSS	VSS	VSS							
60	48	—	—	VDD	VDD	VDD							
61	49	37	25	PTC4/ LLWU_P8	DISABLED		PTC4/ LLWU_P8	SPI0_PCS0	UART1_TX	TPM0_CH3			
62	50	38	26	PTC5/ LLWU_P9	DISABLED		PTC5/ LLWU_P9	SPI0_SCK	LPTMR0_ ALT2			CMP0_OUT	
63	51	39	27	PTC6/ LLWU_P10	CMP0_IN0	CMP0_IN0	PTC6/ LLWU_P10	SPI0_MOSI	EXTRG_IN		SPI0_MISO		
64	52	40	28	PTC7	CMP0_IN1	CMP0_IN1	PTC7	SPI0_MISO			SPI0_MOSI		
65	53	—	—	PTC8	CMP0_IN2	CMP0_IN2	PTC8	I2C0_SCL	TPM0_CH4				
66	54	—	—	PTC9	CMP0_IN3	CMP0_IN3	PTC9	I2C0_SDA	TPM0_CH5				
67	55	—	—	PTC10	DISABLED		PTC10	I2C1_SCL					
68	56	—	—	PTC11	DISABLED		PTC11	I2C1_SDA					

80 LQFP	64 LQFP	48 QFN	32 QFN	Pin Name	Default	ALT0	ALT1	ALT2	ALT3	ALT4	ALT5	ALT6	ALT7
69	—	—	—	PTC12	DISABLED		PTC12			TPM_ CLKIN0			
70	—	—	—	PTC13	DISABLED		PTC13			TPM_ CLKIN1			
71	—	—	—	PTC16	DISABLED		PTC16						
72	—	—	—	PTC17	DISABLED		PTC17						
73	57	41	—	PTD0	DISABLED		PTD0	SPI0_PCS0		TPM0_CH0			
74	58	42	—	PTD1	ADC0_SE5b	ADC0_SE5b	PTD1	SPI0_SCK		TPM0_CH1			
75	59	43	—	PTD2	DISABLED		PTD2	SPI0_MOSI	UART2_RX	TPM0_CH2	SPI0_MISO		
76	60	44	—	PTD3	DISABLED		PTD3	SPI0_MISO	UART2_TX	TPM0_CH3	SPI0_MOSI		
77	61	45	29	PTD4/ LLWU_P14	DISABLED		PTD4/ LLWU_P14	SPI1_PCS0	UART2_RX	TPM0_CH4			
78	62	46	30	PTD5	ADC0_SE6b	ADC0_SE6b	PTD5	SPI1_SCK	UART2_TX	TPM0_CH5			
79	63	47	31	PTD6/ LLWU_P15	ADC0_SE7b	ADC0_SE7b	PTD6/ LLWU_P15	SPI1_MOSI	UART0_RX		SPI1_MISO		
80	64	48	32	PTD7	DISABLED		PTD7	SPI1_MISO	UART0_TX		SPI1_MOSI		

5.2 KL15 pinouts

The following figures show the pinout diagrams for the devices supported by this document. Many signals may be multiplexed onto a single pin. To determine what signals can be used on which pin, see KL15 Signal Multiplexing and Pin Assignments.

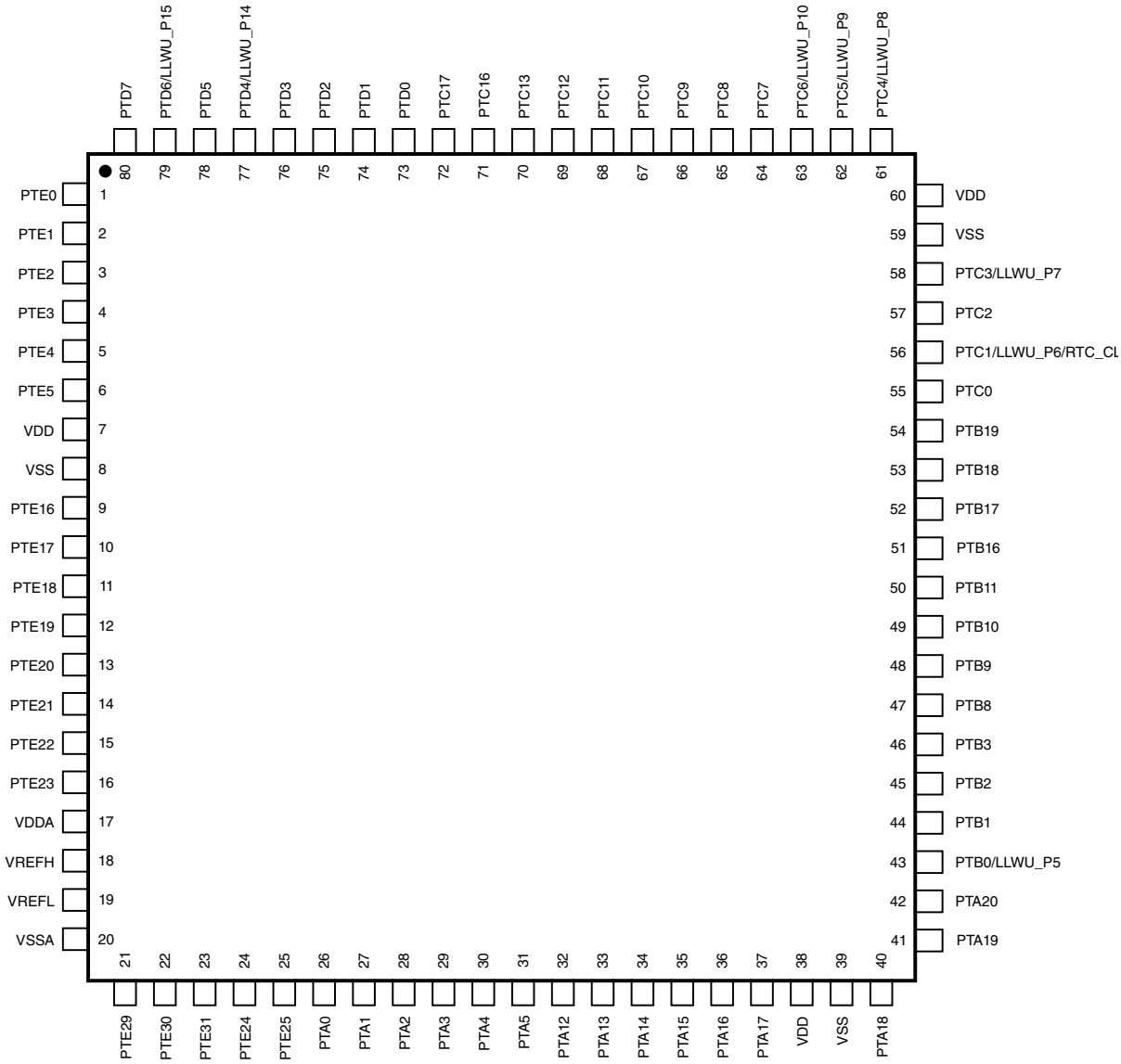

Figure 19. KL15 80-pin LQFP pinout diagram

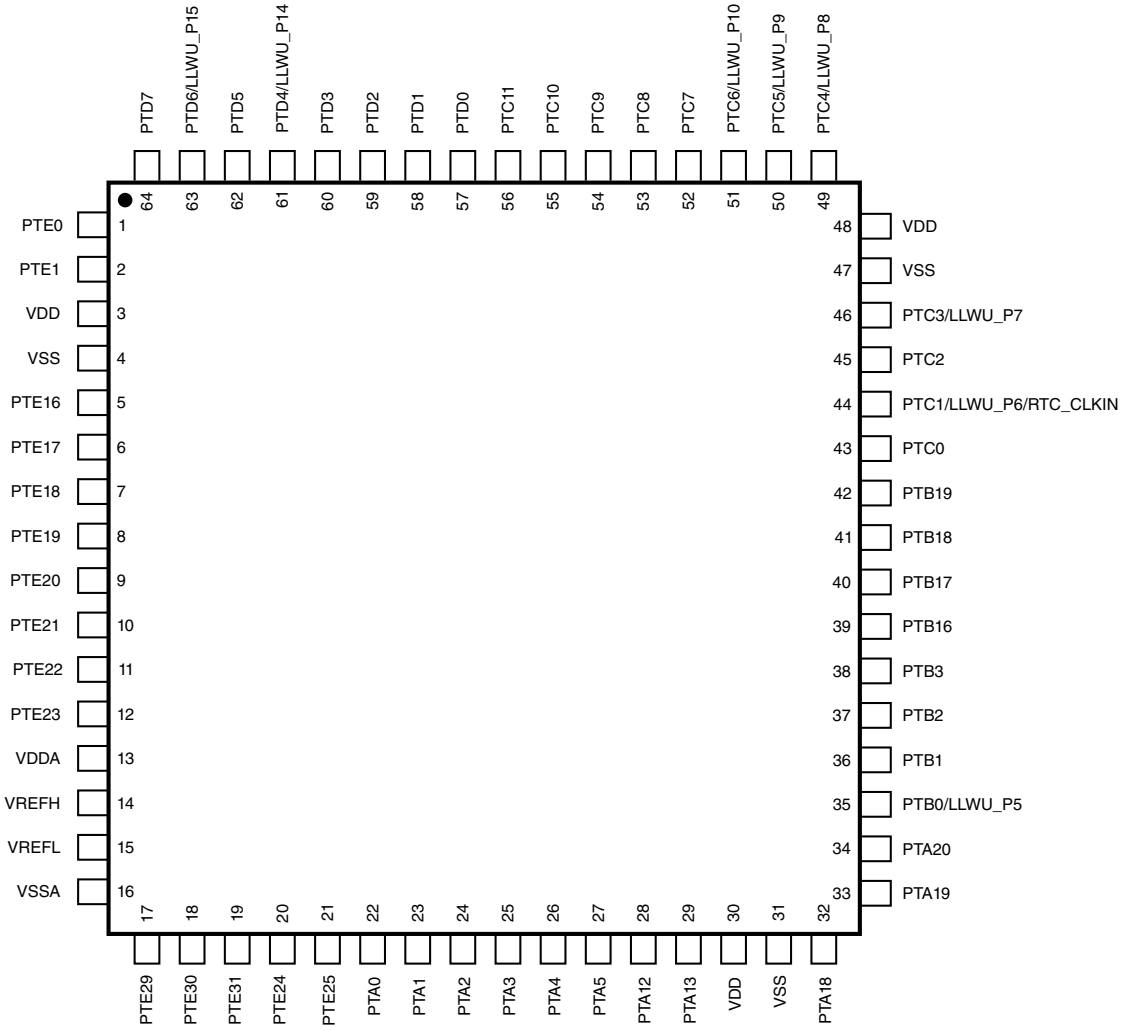

Figure 20. KL15 64-pin LQFP pinout diagram

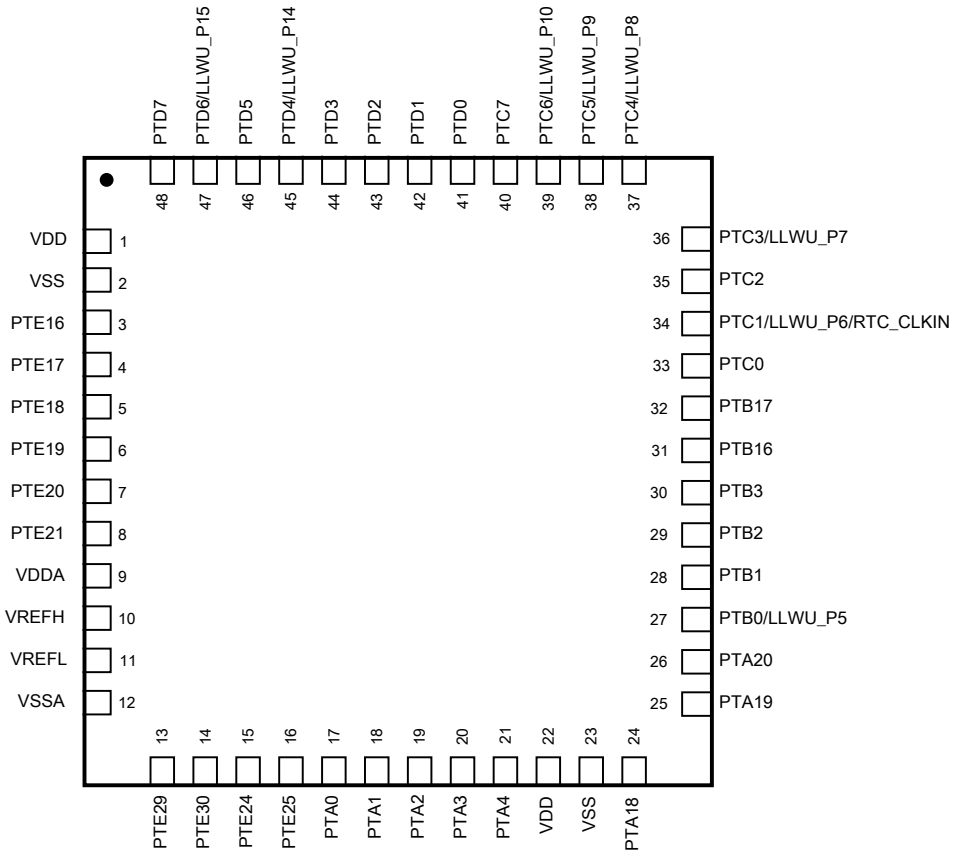

Figure 21. KL15 48-pin QFN pinout diagram

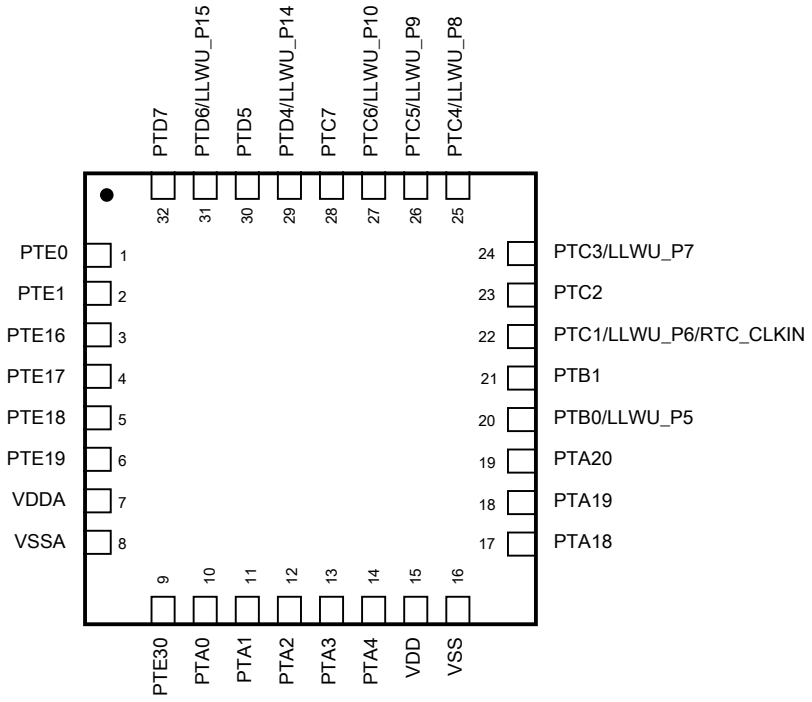

Figure 22. KL15 32-pin QFN pinout diagram

6 Ordering parts

6.1 Determining valid orderable parts

Valid orderable part numbers are provided on the web. To determine the orderable part numbers for this device, go to **freescale.com** and perform a part number search for the following device numbers: PKL15 and MKL15

7 Part identification

7.1 Description

Part numbers for the chip have fields that identify the specific part. You can use the values of these fields to determine the specific part you have received.

7.2 Format

Part numbers for this device have the following format:

Q KL## A FFF R T PP CC N

7.3 Fields

This table lists the possible values for each field in the part number (not all combinations are valid):

Table 36. Part number fields descriptions

Field	Description	Values
Q	Qualification status	• M = Fully qualified, general market flow • P = Prequalification
KL##	Kinetis family	• KL15
A	Key attribute	• Z = Cortex-M0+
FFF	Program flash memory size	• 32 = 32 KB • 64 = 64 KB • 128 = 128 KB
R	Silicon revision	• (Blank) = Main • A = Revision after main
T	Temperature range (°C)	• V = –40 to 105
PP	Package identifier	• FM = 32 QFN (5 mm x 5 mm) • FT = 48 QFN (7 mm x 7 mm) • LH = 64 LQFP (10 mm x 10 mm) • LK = 80 LQFP (12 mm x 12 mm)
CC	Maximum CPU frequency (MHz)	• 4 = 48 MHz
N	Packaging type	• R = Tape and reel • (Blank) = Trays

7.4 Example

This is an example part number:

MKL15Z32VFT4

8 Terminology and guidelines

8.1 Definition: Operating requirement

An *operating requirement* is a specified value or range of values for a technical characteristic that you must guarantee during operation to avoid incorrect operation and possibly decreasing the useful life of the chip.

8.1.1 Example

This is an example of an operating requirement:

Symbol	Description	Min.	Max.	Unit
V_{DD}	1.0 V core supply voltage	0.9	1.1	V

8.2 Definition: Operating behavior

Unless otherwise specified, an *operating behavior* is a specified value or range of values for a technical characteristic that are guaranteed during operation if you meet the operating requirements and any other specified conditions.

8.2.1 Example

This is an example of an operating behavior:

Symbol	Description	Min.	Max.	Unit
I_{WP}	Digital I/O weak pullup/ pulldown current	10	130	μA

8.3 Definition: Attribute

An *attribute* is a specified value or range of values for a technical characteristic that are guaranteed, regardless of whether you meet the operating requirements.

8.3.1 Example

This is an example of an attribute:

Symbol	Description	Min.	Max.	Unit
CIN_D	Input capacitance: digital pins	—	7	pF

8.4 Definition: Rating

A *rating* is a minimum or maximum value of a technical characteristic that, if exceeded, may cause permanent chip failure:

- *Operating ratings* apply during operation of the chip.
- *Handling ratings* apply when the chip is not powered.

8.4.1 Example

This is an example of an operating rating:

Symbol	Description	Min.	Max.	Unit
V_{DD}	1.0 V core supply voltage	–0.3	1.2	V

8.5 Result of exceeding a rating

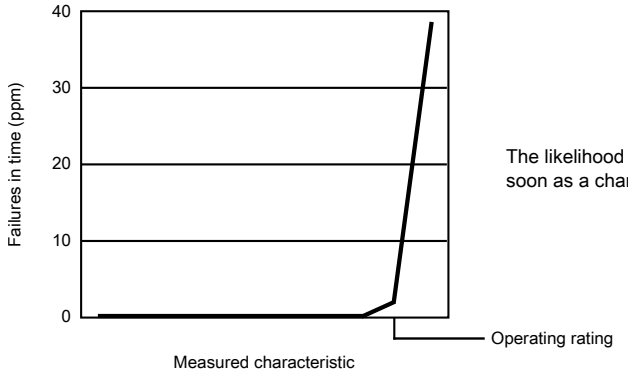

The likelihood of permanent chip failure increases rapidly as soon as a characteristic begins to exceed one of its operating ratings.

8.6 Relationship between ratings and operating requirements

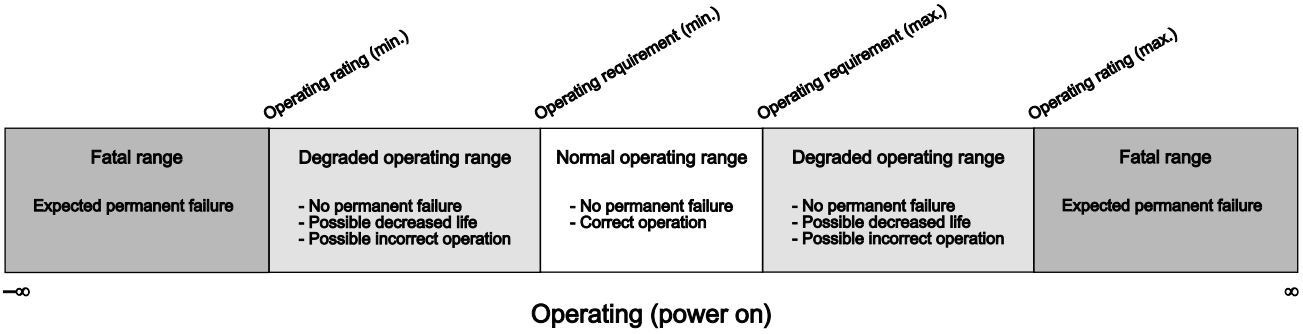

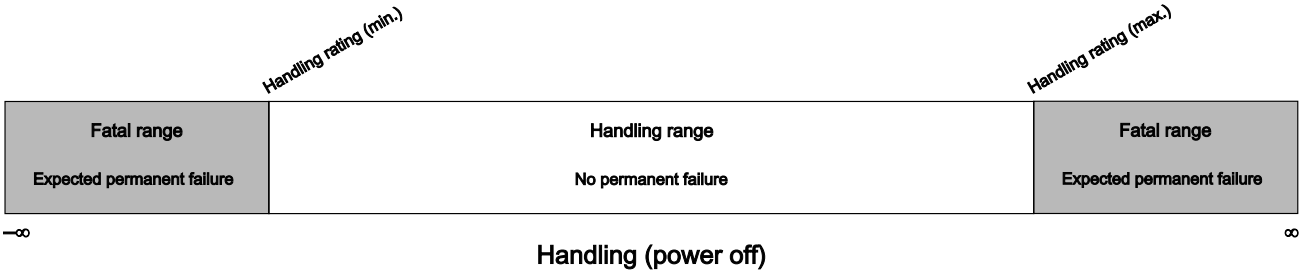

8.7 Guidelines for ratings and operating requirements

Follow these guidelines for ratings and operating requirements:

- Never exceed any of the chip's ratings.
- During normal operation, don't exceed any of the chip's operating requirements.
- If you must exceed an operating requirement at times other than during normal operation (for example, during power sequencing), limit the duration as much as possible.

8.8 Definition: Typical value

A *typical value* is a specified value for a technical characteristic that:

- Lies within the range of values specified by the operating behavior
- Given the typical manufacturing process, is representative of that characteristic during operation when you meet the typical-value conditions or other specified conditions

Typical values are provided as design guidelines and are neither tested nor guaranteed.

8.8.1 Example 1

This is an example of an operating behavior that includes a typical value:

Symbol	Description	Min.	Typ.	Max.	Unit
I_{WP}	Digital I/O weak pullup/pulldown current	10	70	130	μA

8.8.2 Example 2

This is an example of a chart that shows typical values for various voltage and temperature conditions:

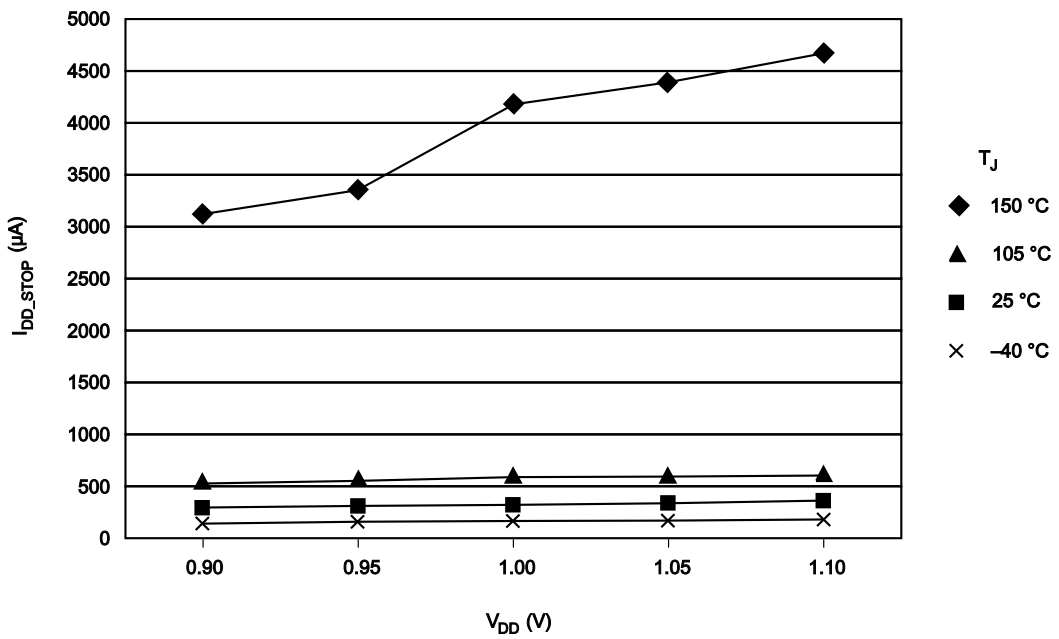

8.9 Typical value conditions

Typical values assume you meet the following conditions (or other conditions as specified):

Table 37. Typical value conditions

Symbol	Description	Value	Unit
T_A	Ambient temperature	25	°C
V_{DD}	3.3 V supply voltage	3.3	V

9 Revision history

The following table provides a revision history for this document.

Table 38. Revision history

Rev. No.	Date	Substantial Changes
2	9/2012	Completed all the TBDs, initial public release.
3	9/2012	Updated Signal Multiplexing and Pin Assignments table to add UART2 signals.
4	3/2014	• Updated the front page and restructured the chapters

Table continues on the next page...

Table 38. Revision history (continued)

Rev. No.	Date	Substantial Changes
		• Added a note to the I_{LAT} in the ESD handling ratings • Updated Voltage and current operating ratings • Updated Voltage and current operating requirements • Updated the Voltage and current operating behaviors • Updated Power mode transition operating behaviors • Updated Capacitance attributes • Updated footnote in the Device clock specifications • Updated t_{ersall} in the Flash timing specifications — commands • Updated VADIN in the 16-bit ADC operating conditions • Updated Temp sensor slope and voltage and added a note to them in the 16-bit ADC electrical characteristics • Removed T_A in the 12-bit DAC operating requirements • Added Inter-Integrated Circuit Interface (I2C) timing
5	08/2014	• Updated related source and added block diagram in the front page • Updated Power consumption operating behaviors

How to Reach Us:

Home Page:
freescale.com

Web Support:
freescale.com/support

Information in this document is provided solely to enable system and software implementers to use Freescale products. There are no express or implied copyright licenses granted hereunder to design or fabricate any integrated circuits based on the information in this document. Freescale reserves the right to make changes without further notice to any products herein.

Freescale makes no warranty, representation, or guarantee regarding the suitability of its products for any particular purpose, nor does Freescale assume any liability arising out of the application or use of any product or circuit, and specifically disclaims any and all liability, including without limitation consequential or incidental damages. “Typical” parameters that may be provided in Freescale data sheets and/or specifications can and do vary in different applications, and actual performance may vary over time. All operating parameters, including “typicals,” must be validated for each customer application by customer's technical experts. Freescale does not convey any license under its patent rights nor the rights of others. Freescale sells products pursuant to standard terms and conditions of sale, which can be found at the following address: freescale.com/SalesTermsandConditions.

Freescale, Freescale logo, Energy Efficient Solutions logo, and Kinetis are trademarks of Freescale Semiconductor, Inc., Reg. U.S. Pat. & Tm. Off. All other product or service names are the property of their respective owners. ARM and Cortex are registered trademarks of ARM Limited (or its subsidiaries) in the EU and/or elsewhere. All rights reserved.

© 2012-2014 Freescale Semiconductor, Inc.

Document Number KL15P80M48SF0
Revision 5 08/2014