Freescale Semiconductor
Data Sheet: Technical Data

Document Number: K12P80M50SF4
Rev. 4.1, 08/2013

K12P80M50SF4

K12 Sub-Family

Supports the following:
MK12DX128VLK5, MK12DX256VLK5, MK12DN512VLK5

Features

- Operating Characteristics
  - Voltage range: 1.71 to 3.6 V
  - Flash write voltage range: 1.71 to 3.6 V
  - Temperature range (ambient): -40 to 105°C
- Performance
  - Up to 50 MHz ARM Cortex-M4 core with DSP instructions delivering 1.25 Dhrystone MIPS per MHz
- Memories and memory interfaces
  - Up to 512 KB of program flash for devices without FlexNVM.
  - Up to 256 KB program flash for devices with FlexNVM.
  - 64 KB FlexNVM on FlexMemory devices
  - 4 KB FlexRAM on FlexMemory devices
  - Up to 64 KB RAM
  - Serial programming interface (EzPort)
- Clocks
  - 3 to 32 MHz crystal oscillator
  - 32 kHz crystal oscillator
  - Multi-purpose clock generator
- System peripherals
  - Multiple low-power modes to provide power optimization based on application requirements
  - 16-channel DMA controller, supporting up to 63 request sources
  - External watchdog monitor
  - Software watchdog
  - Low-leakage wakeup unit
- Security and integrity modules
  - Hardware CRC module to support fast cyclic redundancy checks
  - 128-bit unique identification (ID) number per chip
- Human-machine interface
  - General-purpose input/output
- Analog modules
  - 16-bit SAR ADC
  - 12-bit DAC
  - Two analog comparators (CMP) containing a 6-bit DAC and programmable reference input
  - Voltage reference
- Timers
  - Programmable delay block
  - Eight-channel motor control/general purpose/PWM timer
  - Two 2-channel general purpose timers, one with quadrature decoder functionality
  - Periodic interrupt timers
  - 16-bit low-power timer
  - Carrier modulator transmitter
  - Real-time clock
- Communication interfaces
  - USB Device Charger detect
  - Two SPI modules
  - Two I2C modules
  - Four UART modules
  - I2S module

Freescale reserves the right to change the detail specifications as may be required to permit improvements in the design of its products.

© 2012–2013 Freescale Semiconductor, Inc.

Table of Contents

1 Ordering parts....3
1.1 Determining valid orderable parts....3
2 Part identification....3
2.1 Description....3
2.2 Format....3
2.3 Fields....3
2.4 Example....4
2.5 Small package marking....4
3 Terminology and guidelines....5
3.1 Definition: Operating requirement....5
3.2 Definition: Operating behavior....5
3.3 Definition: Attribute....6
3.4 Definition: Rating....6
3.5 Result of exceeding a rating....7
3.6 Relationship between ratings and operating requirements....7
3.7 Guidelines for ratings and operating requirements....8
3.8 Definition: Typical value....8
3.9 Typical value conditions....9
4 Ratings....9
4.1 Thermal handling ratings....9
4.2 Moisture handling ratings....10
4.3 ESD handling ratings....10
4.4 Voltage and current operating ratings....10
5 General....10
5.1 AC electrical characteristics....11
5.2 Nonswitching electrical specifications....11
5.2.1 Voltage and current operating requirements....11
5.2.2 LVD and POR operating requirements....12
5.2.3 Voltage and current operating behaviors....13
5.2.4 Power mode transition operating behaviors....13
5.2.5 Power consumption operating behaviors....14
5.2.6 EMC radiated emissions operating behaviors....18
5.2.7 Designing with radiated emissions in mind....19
5.2.8 Capacitance attributes....19
5.3 Switching specifications....19
5.3.1 Device clock specifications....19
5.3.2 General switching specifications....20
5.4 Thermal specifications....20
5.4.1 Thermal operating requirements....21
5.4.2 Thermal attributes....21
6 Peripheral operating requirements and behaviors....22
6.1 Core modules....22
6.1.1 JTAG electricals....22
6.2 System modules....25
6.3 Clock modules....25
6.3.1 MCG specifications....25
6.3.2 Oscillator electrical specifications....27
6.3.3 32 kHz oscillator electrical characteristics....29
6.4 Memories and memory interfaces....30
6.4.1 Flash electrical specifications....30
6.4.2 EzPort switching specifications....33
6.5 Security and integrity modules....34
6.6 Analog....34
6.6.1 ADC electrical specifications....34
6.6.2 CMP and 6-bit DAC electrical specifications....38
6.6.3 12-bit DAC electrical characteristics....41
6.6.4 Voltage reference electrical specifications....44
6.7 Timers....45
6.8 Communication interfaces....45
6.8.1 DSPI switching specifications (limited voltage range)....45
6.8.2 DSPI switching specifications (full voltage range)....47
6.8.3 I2C switching specifications....49
6.8.4 UART switching specifications....49
6.8.5 Normal Run, Wait and Stop mode performance over the full operating voltage range....49
6.8.6 VLPR, VLPW, and VLPS mode performance over the full operating voltage range....51
7 Dimensions....53
7.1 Obtaining package dimensions....53
8 Pinout....53
8.1 K12 Signal Multiplexing and Pin Assignments....53
8.2 K12 Pinouts....57
9 Revision History....58

1 Ordering parts

1.1 Determining valid orderable parts

Valid orderable part numbers are provided on the web. To determine the orderable part numbers for this device, go to freescale.com and perform a part number search for the following device numbers: PK12 and MK12 .

2 Part identification

2.1 Description

Part numbers for the chip have fields that identify the specific part. You can use the values of these fields to determine the specific part you have received.

2.2 Format

Part numbers for this device have the following format:

Q K## A M FFF R T PP CC N

2.3 Fields

This table lists the possible values for each field in the part number (not all combinations are valid):

Field	Description	Values
Q	Qualification status	• M = Fully qualified, general market flow • P = Prequalification
K##	Kinetis family	• K12
A	Key attribute	• D = Cortex-M4 w/ DSP • F = Cortex-M4 w/ DSP and FPU
M	Flash memory type	• N = Program flash only • X = Program flash and FlexMemory

Table continues on the next page...

Field	Description	Values
FFF	Program flash memory size	• 32 = 32 KB • 64 = 64 KB • 128 = 128 KB • 256 = 256 KB • 512 = 512 KB • 1M0 = 1 MB • 2M0 = 2 MB
R	Silicon revision	• Z = Initial • (Blank) = Main • A = Revision after main
T	Temperature range (°C)	• V = –40 to 105 • C = –40 to 85
PP	Package identifier	• FM = 32 QFN (5 mm x 5 mm) • FT = 48 QFN (7 mm x 7 mm) • LF = 48 LQFP (7 mm x 7 mm) • LH = 64 LQFP (10 mm x 10 mm) • MP = 64 MAPBGA (5 mm x 5 mm) • LK = 80 LQFP (12 mm x 12 mm) • LL = 100 LQFP (14 mm x 14 mm) • MC = 121 MAPBGA (8 mm x 8 mm) • LQ = 144 LQFP (20 mm x 20 mm) • MD = 144 MAPBGA (13 mm x 13 mm)
CC	Maximum CPU frequency (MHz)	• 5 = 50 MHz • 7 = 72 MHz • 10 = 100 MHz • 12 = 120 MHz • 15 = 150 MHz • 18 = 180 MHz
N	Packaging type	• R = Tape and reel • (Blank) = Trays

2.4 Example

This is an example part number:

MK12DX128VLK5

2.5 Small package marking

In an effort to save space, small package devices use special marking on the chip. These markings have the following format:

Q ## C F T PP

This table lists the possible values for each field in the part number for small packages (not all combinations are valid):

Field	Description	Values
Q	Qualification status	• M = Fully qualified, general market flow • P = Prequalification
C	Speed	• G = 50 MHz
F	Flash memory configuration	• G = 128 KB + Flex • H = 256 KB + Flex • 9 = 512 KB
T	Temperature range (°C)	• V = –40 to 105
PP	Package identifier	• MC = 121 MAPBGA

This tables lists some examples of small package marking along with the original part numbers:

Original part number	Alternate part number
MK12DX256VLF5	M12GHVLF
MK12DN512VLH5	M12G9VLH

3 Terminology and guidelines

3.1 Definition: Operating requirement

An *operating requirement* is a specified value or range of values for a technical characteristic that you must guarantee during operation to avoid incorrect operation and possibly decreasing the useful life of the chip.

3.1.1 Example

This is an example of an operating requirement:

Symbol	Description	Min.	Max.	Unit
V_{DD}	1.0 V core supply voltage	0.9	1.1	V

3.2 Definition: Operating behavior

An *operating behavior* is a specified value or range of values for a technical characteristic that are guaranteed during operation if you meet the operating requirements and any other specified conditions.

3.2.1 Example

This is an example of an operating behavior:

Symbol	Description	Min.	Max.	Unit
I_{WP}	Digital I/O weak pullup/ pulldown current	10	130	µA

3.3 Definition: Attribute

An *attribute* is a specified value or range of values for a technical characteristic that are guaranteed, regardless of whether you meet the operating requirements.

3.3.1 Example

This is an example of an attribute:

Symbol	Description	Min.	Max.	Unit
CIN_D	Input capacitance: digital pins	—	7	pF

3.4 Definition: Rating

A *rating* is a minimum or maximum value of a technical characteristic that, if exceeded, may cause permanent chip failure:

- *Operating ratings* apply during operation of the chip.
- *Handling ratings* apply when the chip is not powered.

3.4.1 Example

This is an example of an operating rating:

Symbol	Description	Min.	Max.	Unit
V_{DD}	1.0 V core supply voltage	–0.3	1.2	V

3.5 Result of exceeding a rating

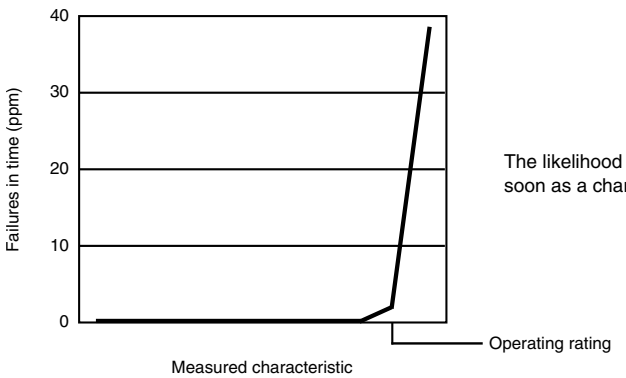

The likelihood of permanent chip failure increases rapidly as soon as a characteristic begins to exceed one of its operating ratings.

3.6 Relationship between ratings and operating requirements

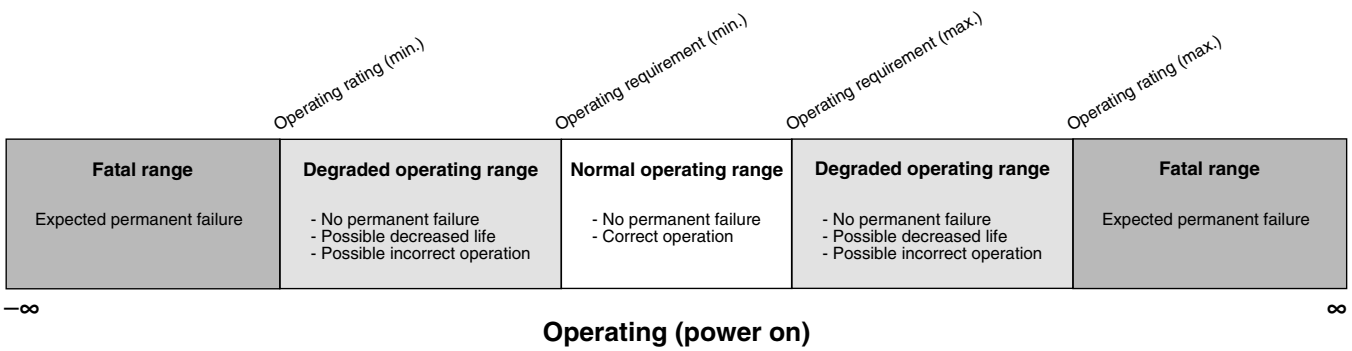

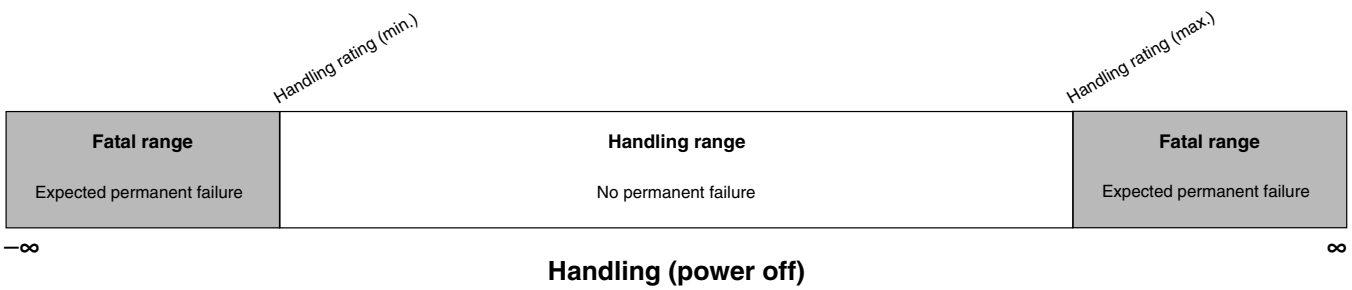

3.7 Guidelines for ratings and operating requirements

Follow these guidelines for ratings and operating requirements:

- Never exceed any of the chip's ratings.
- During normal operation, don't exceed any of the chip's operating requirements.
- If you must exceed an operating requirement at times other than during normal operation (for example, during power sequencing), limit the duration as much as possible.

3.8 Definition: Typical value

A *typical value* is a specified value for a technical characteristic that:

- Lies within the range of values specified by the operating behavior
- Given the typical manufacturing process, is representative of that characteristic during operation when you meet the typical-value conditions or other specified conditions

Typical values are provided as design guidelines and are neither tested nor guaranteed.

3.8.1 Example 1

This is an example of an operating behavior that includes a typical value:

Symbol	Description	Min.	Typ.	Max.	Unit
I_{WP}	Digital I/O weak pullup/pulldown current	10	70	130	μA

3.8.2 Example 2

This is an example of a chart that shows typical values for various voltage and temperature conditions:

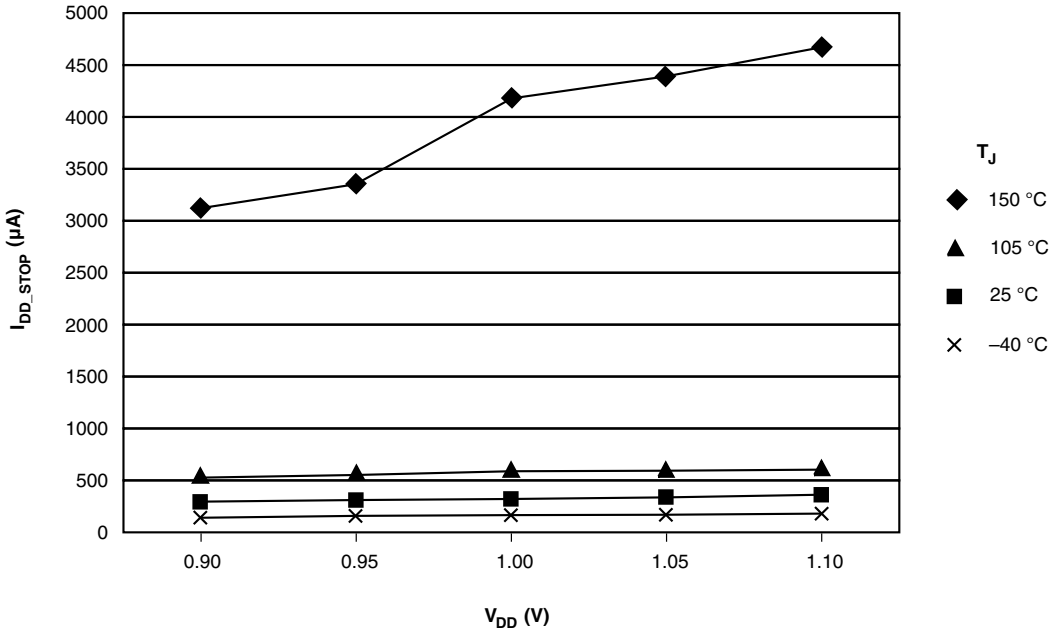

3.9 Typical value conditions

Typical values assume you meet the following conditions (or other conditions as specified):

Symbol	Description	Value	Unit
T_A	Ambient temperature	25	°C
V_{DD}	3.3 V supply voltage	3.3	V

4 Ratings

4.1 Thermal handling ratings

Symbol	Description	Min.	Max.	Unit	Notes
T_{STG}	Storage temperature	–55	150	°C	1
T_{SDR}	Solder temperature, lead-free	—	260	°C	2

1. Determined according to JEDEC Standard JESD22-A103, *High Temperature Storage Life*.
2. Determined according to IPC/JEDEC Standard J-STD-020, *Moisture/Reflow Sensitivity Classification for Nonhermetic Solid State Surface Mount Devices*.

4.2 Moisture handling ratings

Symbol	Description	Min.	Max.	Unit	Notes
MSL	Moisture sensitivity level	—	3	—	1

1. Determined according to IPC/JEDEC Standard J-STD-020, *Moisture/Reflow Sensitivity Classification for Nonhermetic Solid State Surface Mount Devices*.

4.3 ESD handling ratings

Symbol	Description	Min.	Max.	Unit	Notes
V_{HBM}	Electrostatic discharge voltage, human body model	-2000	+2000	V	1
V_{CDM}	Electrostatic discharge voltage, charged-device model	-500	+500	V	2
I_{LAT}	Latch-up current at ambient temperature of 105°C	-100	+100	mA	3

1. Determined according to JEDEC Standard JESD22-A114, *Electrostatic Discharge (ESD) Sensitivity Testing Human Body Model (HBM)*.
2. Determined according to JEDEC Standard JESD22-C101, *Field-Induced Charged-Device Model Test Method for Electrostatic-Discharge-Withstand Thresholds of Microelectronic Components*.
3. Determined according to JEDEC Standard JESD78, *IC Latch-Up Test*.

4.4 Voltage and current operating ratings

Symbol	Description	Min.	Max.	Unit
V_{DD}	Digital supply voltage	–0.3	3.8	V
I_{DD}	Digital supply current	—	155	mA
V_{DIO}	Digital input voltage (except $\overline{\text{RESET}}$, EXTAL, and XTAL)	–0.3		V
V_{AIO}	Analog[1], $\overline{\text{RESET}}$, EXTAL, and XTAL input voltage	–0.3	V_{DD} + 0.3	V
I_D	Maximum current single pin limit (applies to all digital pins)	–25	25	mA
V_{DDA}	Analog supply voltage	V_{DD} – 0.3	V_{DD} + 0.3	V
VREGIN	USB regulator input	–0.3	6.0	V
V_{BAT}	RTC battery supply voltage	–0.3	3.8	V

1. Analog pins are defined as pins that do not have an associated general purpose I/O port function.

5 General

5.1 AC electrical characteristics

Unless otherwise specified, propagation delays are measured from the 50% to the 50% point, and rise and fall times are measured at the 20% and 80% points, as shown in the following figure.

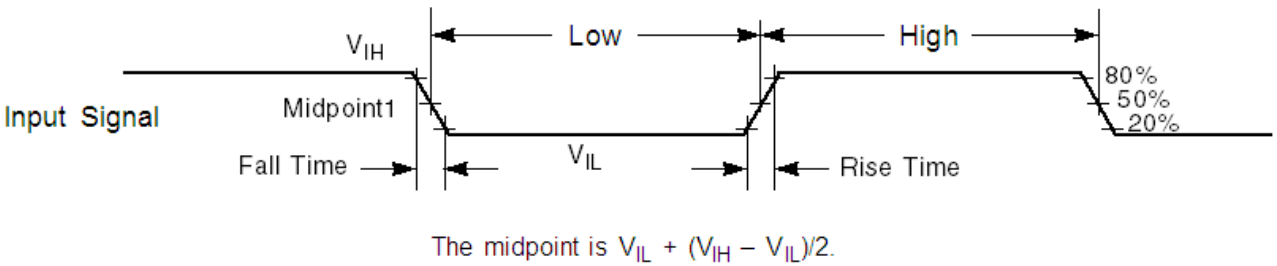

Figure 1. Input signal measurement reference

5.2 Nonswitching electrical specifications

5.2.1 Voltage and current operating requirements

Table 1. Voltage and current operating requirements

Symbol	Description	Min.	Max.	Unit	Notes
V_{DD}	Supply voltage	1.71	3.6	V	
V_{DDA}	Analog supply voltage	1.71	3.6	V	
$V_{DD} – V_{DDA}$	V_{DD}-to-V_{DDA} differential voltage	–0.1	0.1	V	
$V_{SS} – V_{SSA}$	V_{SS}-to-V_{SSA} differential voltage	–0.1	0.1	V	
V_{BAT}	RTC battery supply voltage	1.71	3.6	V	
V_{IH}	Input high voltage • 2.7 V ≤ V_{DD} ≤ 3.6 V • 1.7 V ≤ V_{DD} ≤ 2.7 V	 0.7 × V_{DD} 0.75 × V_{DD}	 — —	 V V	
V_{IL}	Input low voltage • 2.7 V ≤ V_{DD} ≤ 3.6 V • 1.7 V ≤ V_{DD} ≤ 2.7 V	 — —	 0.35 × V_{DD} 0.3 × V_{DD}	 V V	
V_{HYS}	Input hysteresis	0.06 × V_{DD}	—	V	
I_{ICIO}	I/O pin DC injection current — single pin • V_{IN} < V_{SS}-0.3V (Negative current injection) • V_{IN} > V_{DD}+0.3V (Positive current injection)	 -3 —	 — +3	 mA	1

Table continues on the next page...

Table 1. Voltage and current operating requirements (continued)

Symbol	Description	Min.	Max.	Unit	Notes
I_{ICcont}	Contiguous pin DC injection current —regional limit, includes sum of negative injection currents or sum of positive injection currents of 16 contiguous pins • Negative current injection • Positive current injection	 -25 —	 — +25	 mA	
V_{RAM}	V_{DD} voltage required to retain RAM	1.2	—	V	
V_{RFVBAT}	V_{BAT} voltage required to retain the VBAT register file	V_{POR_VBAT}	—	V	

1. All analog pins are internally clamped to V_{SS} and V_{DD} through ESD protection diodes. If V_{IN} is less than V_{AIO_MIN} or greater than V_{AIO_MAX}, a current limiting resistor is required. The negative DC injection current limiting resistor is calculated as $R=(V_{AIO_MIN}-V_{IN})/|I_{ICAIO}|$. The positive injection current limiting resistor is calculated as $R=(V_{IN}-V_{AIO_MAX})/|I_{ICAIO}|$. Select the larger of these two calculated resistances if the pin is exposed to positive and negative injection currents.

5.2.2 LVD and POR operating requirements

Table 2. V_{DD} supply LVD and POR operating requirements

Symbol	Description	Min.	Typ.	Max.	Unit	Notes
V_{POR}	Falling VDD POR detect voltage	0.8	1.1	1.5	V	
V_{LVDH}	Falling low-voltage detect threshold — high range (LVDV=01)	2.48	2.56	2.64	V	
	Low-voltage warning thresholds — high range					1
V_{LVW1H}	• Level 1 falling (LVWV=00)	2.62	2.70	2.78	V	
V_{LVW2H}	• Level 2 falling (LVWV=01)	2.72	2.80	2.88	V	
V_{LVW3H}	• Level 3 falling (LVWV=10)	2.82	2.90	2.98	V	
V_{LVW4H}	• Level 4 falling (LVWV=11)	2.92	3.00	3.08	V	
V_{HYSH}	Low-voltage inhibit reset/recover hysteresis — high range	—	80	—	mV	
V_{LVDL}	Falling low-voltage detect threshold — low range (LVDV=00)	1.54	1.60	1.66	V	
	Low-voltage warning thresholds — low range					1
V_{LVW1L}	• Level 1 falling (LVWV=00)	1.74	1.80	1.86	V	
V_{LVW2L}	• Level 2 falling (LVWV=01)	1.84	1.90	1.96	V	
V_{LVW3L}	• Level 3 falling (LVWV=10)	1.94	2.00	2.06	V	
V_{LVW4L}	• Level 4 falling (LVWV=11)	2.04	2.10	2.16	V	
V_{HYSL}	Low-voltage inhibit reset/recover hysteresis — low range	—	60	—	mV	
V_{BG}	Bandgap voltage reference	0.97	1.00	1.03	V	
t_{LPO}	Internal low power oscillator period — factory trimmed	900	1000	1100	μs	

1. Rising threshold is the sum of falling threshold and hysteresis voltage

Table 3. VBAT power operating requirements

Symbol	Description	Min.	Typ.	Max.	Unit	Notes
V_{POR_VBAT}	Falling VBAT supply POR detect voltage	0.8	1.1	1.5	V	

5.2.3 Voltage and current operating behaviors

Table 4. Voltage and current operating behaviors

Symbol	Description	Min.	Max.	Unit	Notes
V_{OH}	Output high voltage — high drive strength				
	• 2.7 V ≤ V_{DD} ≤ 3.6 V, I_{OH} = - 9 mA	V_{DD} – 0.5	—	V	
	• 1.71 V ≤ V_{DD} ≤ 2.7 V, I_{OH} = -3 mA	V_{DD} – 0.5	—	V	
	Output high voltage — low drive strength				
	• 2.7 V ≤ V_{DD} ≤ 3.6 V, I_{OH} = -2 mA	V_{DD} – 0.5	—	V	
	• 1.71 V ≤ V_{DD} ≤ 2.7 V, I_{OH} = -0.6 mA	V_{DD} – 0.5	—	V	
I_{OHT}	Output high current total for all ports	—	100	mA	
V_{OL}	Output low voltage — high drive strength				
	• 2.7 V ≤ V_{DD} ≤ 3.6 V, I_{OL} = 9 mA	—	0.5	V	
	• 1.71 V ≤ V_{DD} ≤ 2.7 V, I_{OL} = 3 mA	—	0.5	V	
	Output low voltage — low drive strength				
	• 2.7 V ≤ V_{DD} ≤ 3.6 V, I_{OL} = 2 mA	—	0.5	V	
	• 1.71 V ≤ V_{DD} ≤ 2.7 V, I_{OL} = 0.6 mA	—	0.5	V	
I_{OLT}	Output low current total for all ports	—	100	mA	
I_{IN}	Input leakage current (per pin)				
	• @ full temperature range	—	1.0	μA	1
	• @ 25 °C	—	0.1	μA	
I_{OZ}	Hi-Z (off-state) leakage current (per pin)	—	1	μA	
I_{OZ}	Total Hi-Z (off-state) leakage current (all input pins)	—	4	μA	
R_{PU}	Internal pullup resistors	22	50	kΩ	2
R_{PD}	Internal pulldown resistors	22	50	kΩ	3

1. Tested by ganged leakage method
2. Measured at Vinput = V_{SS}
3. Measured at Vinput = V_{DD}

5.2.4 Power mode transition operating behaviors

All specifications except t_{POR}, and VLLSx→RUN recovery times in the following table assume this clock configuration:

- CPU and system clocks = 50 MHz
- Bus clock = 50 MHz
- Flash clock = 25 MHz
- MCG mode: FEI

Table 5. Power mode transition operating behaviors

Symbol	Description	Min.	Max.	Unit	Notes
t_{POR}	After a POR event, amount of time from the point V_{DD} reaches 1.71 V to execution of the first instruction across the operating temperature range of the chip. • 1.71 V/(V_{DD} slew rate) ≤ 300 μs • 1.71 V/(V_{DD} slew rate) > 300 μs	 — —	 300 1.7 V / (V_{DD} slew rate)	μs	1
	• VLLS0 → RUN	—	135	μs	
	• VLLS1 → RUN	—	135	μs	
	• VLLS2 → RUN	—	85	μs	
	• VLLS3 → RUN	—	85	μs	
	• LLS → RUN	—	6	μs	
	• VLPS → RUN	—	5.2	μs	
	• STOP → RUN	—	5.2	μs	

1. Normal boot (FTFL_OPT[LPBOOT]=1)

5.2.5 Power consumption operating behaviors

Table 6. Power consumption operating behaviors

Symbol	Description	Min.	Typ.	Max.	Unit	Notes
I_{DDA}	Analog supply current	—	—	See note	mA	1
I_{DD_RUN}	Run mode current — all peripheral clocks disabled, code executing from flash • @ 1.8 V • @ 3.0 V	 — —	 12.98 12.93	 14 13.8	 mA mA	2

Table continues on the next page...

Table 6. Power consumption operating behaviors (continued)

Symbol	Description	Min.	Typ.	Max.	Unit	Notes
I_{DD_RUN}	Run mode current — all peripheral clocks enabled, code executing from flash • @ 1.8 V • @ 3.0 V • @ 25°C • @ 125°C	 — — —	 17.04 17.01 19.8	 19.3 18.9 21.3	 mA mA mA	3, 4
I_{DD_WAIT}	Wait mode high frequency current at 3.0 V — all peripheral clocks disabled	—	7.95	9.5	mA	2
I_{DD_WAIT}	Wait mode reduced frequency current at 3.0 V — all peripheral clocks disabled	—	5.88	7.4	mA	5
I_{DD_STOP}	Stop mode current at 3.0 V • @ –40 to 25°C • @ 50°C • @ 70°C • @ 105°C	—	 320 360 410 610	 436 489 620 1100	μA	
I_{DD_VLPR}	Very-low-power run mode current at 3.0 V — all peripheral clocks disabled	—	754	—	μA	6
I_{DD_VLPR}	Very-low-power run mode current at 3.0 V — all peripheral clocks enabled	—	1.1	—	mA	7
I_{DD_VLPW}	Very-low-power wait mode current at 3.0 V	—	437	—	μA	8
I_{DD_VLPS}	Very-low-power stop mode current at 3.0 V • @ –40 to 25°C • @ 50°C • @ 70°C • @ 105°C	—	 7.33 14 28 110	 24.2 32 48 280	μA	
I_{DD_LLS}	Low leakage stop mode current at 3.0 V • @ –40 to 25°C • @ 50°C • @ 70°C • @ 105°C	—	 3.14 6.48 13.85 55.53	 4.8 28.3 44.6 71.3	μA	
I_{DD_VLLS3}	Very low-leakage stop mode 3 current at 3.0 V • @ –40 to 25°C • @ 50°C • @ 70°C • @ 105°C	—	 2.19 4.35 8.92 35.33	 3.4 4.35 24.6 45.3	μA	
I_{DD_VLLS2}	Very low-leakage stop mode 2 current at 3.0 V • @ –40 to 25°C • @ 50°C • @ 70°C • @ 105°C	—	 1.77 2.81 5.20 19.88	 3.1 13.8 22.3 34.2	μA	

Table continues on the next page...

Table 6. Power consumption operating behaviors (continued)

Symbol	Description	Min.	Typ.	Max.	Unit	Notes
I_{DD_VLLS1}	Very low-leakage stop mode 1 current at 3.0 V • @ –40 to 25°C • @ 50°C • @ 70°C • @ 105°C	—	1.03 1.92 4.03 17.43	1.8 7.5 15.9 28.7	μA	
I_{DD_VLLS0}	Very low-leakage stop mode 0 current at 3.0 V with POR detect circuit enabled • @ –40 to 25°C • @ 50°C • @ 70°C • @ 105°C	—	0.543 1.36 3.39 16.52	1.1 7.58 14.3 24.1	μA	
I_{DD_VLLS0}	Very low-leakage stop mode 0 current at 3.0 V with POR detect circuit disabled • @ –40 to 25°C • @ 50°C • @ 70°C • @ 105°C	—	0.359 1.03 2.87 15.20	0.95 6.8 15.4 25.3	μA	
I_{DD_VBAT}	Average current when CPU is not accessing RTC registers at 3.0 V • @ –40 to 25°C • @ 50°C • @ 70°C • @ 105°C	—	0.91 1.1 1.5 4.3	1.1 1.35 1.85 5.7	μA	9

1. The analog supply current is the sum of the active or disabled current for each of the analog modules on the device. See each module's specification for its supply current.
2. 50 MHz core and system clock, 25 MHz bus clock, and 25 MHz flash clock. MCG configured for FEI mode. All peripheral clocks disabled.
3. 50 MHz core and system clock, 25 MHz bus clock, and 25 MHz flash clock. MCG configured for FEI mode. All peripheral clocks enabled, and peripherals are in active operation.
4. Max values are measured with CPU executing DSP instructions
5. 25 MHz core and system clock, 25 MHz bus clock, and 12.5 MHz flash clock. MCG configured for FEI mode.
6. 4 MHz core, system, and bus clock and 1 MHz flash clock. MCG configured for BLPE mode. All peripheral clocks disabled. Code executing from flash.
7. 4 MHz core, system, and bus clock and 1 MHz flash clock. MCG configured for BLPE mode. All peripheral clocks enabled but peripherals are not in active operation. Code executing from flash.
8. 4 MHz core, system, and bus clock and 1 MHz flash clock. MCG configured for BLPE mode. All peripheral clocks disabled.
9. Includes 32 kHz oscillator current and RTC operation.

5.2.5.1 Diagram: Typical IDD_RUN operating behavior

The following data was measured under these conditions:

- MCG in FBE mode
- USB regulator disabled
- No GPIOs toggled
- Code execution from flash with cache enabled
- For the ALLOFF curve, all peripheral clocks are disabled except FTFL

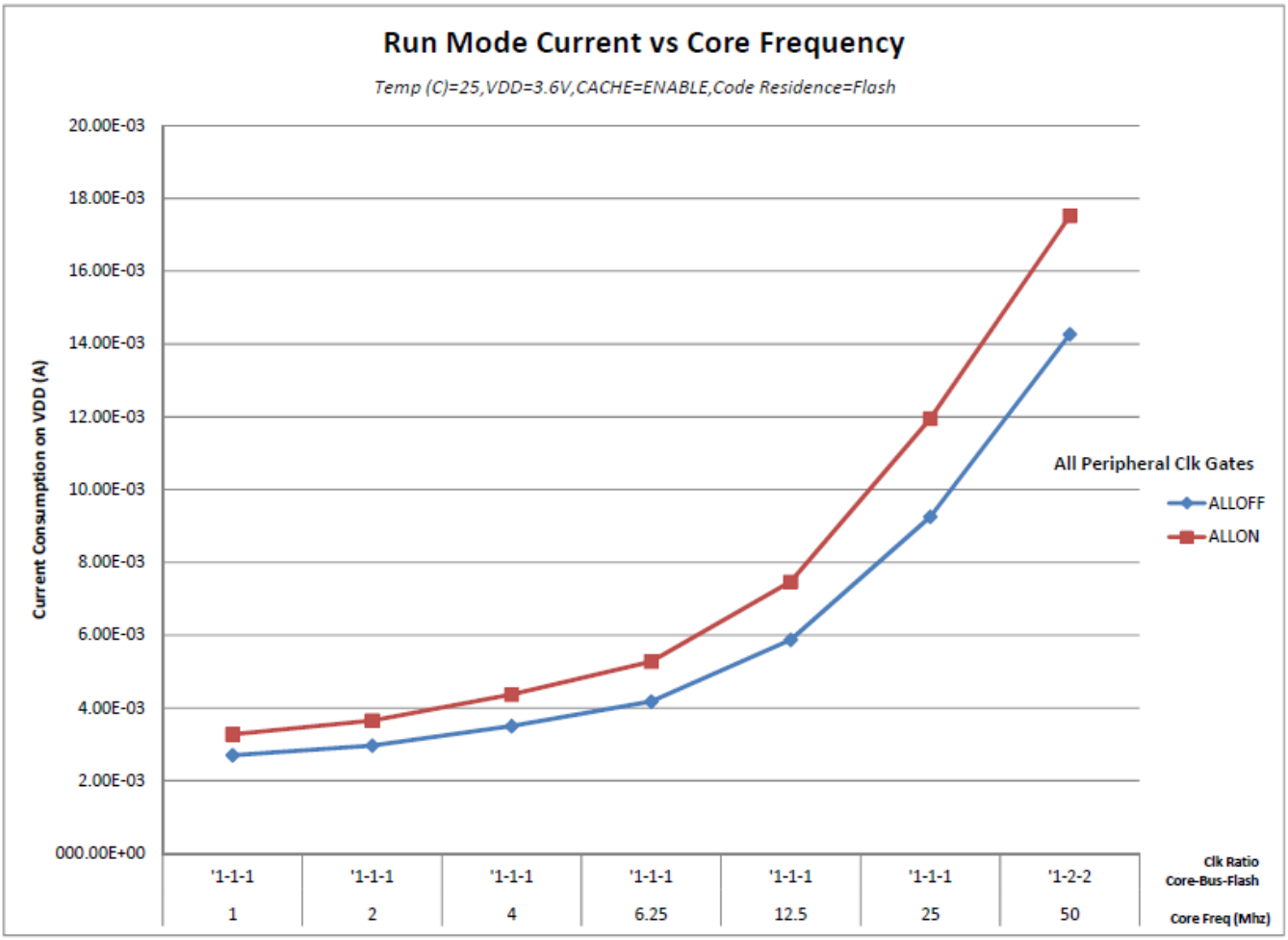

Figure 2. Run mode supply current vs. core frequency

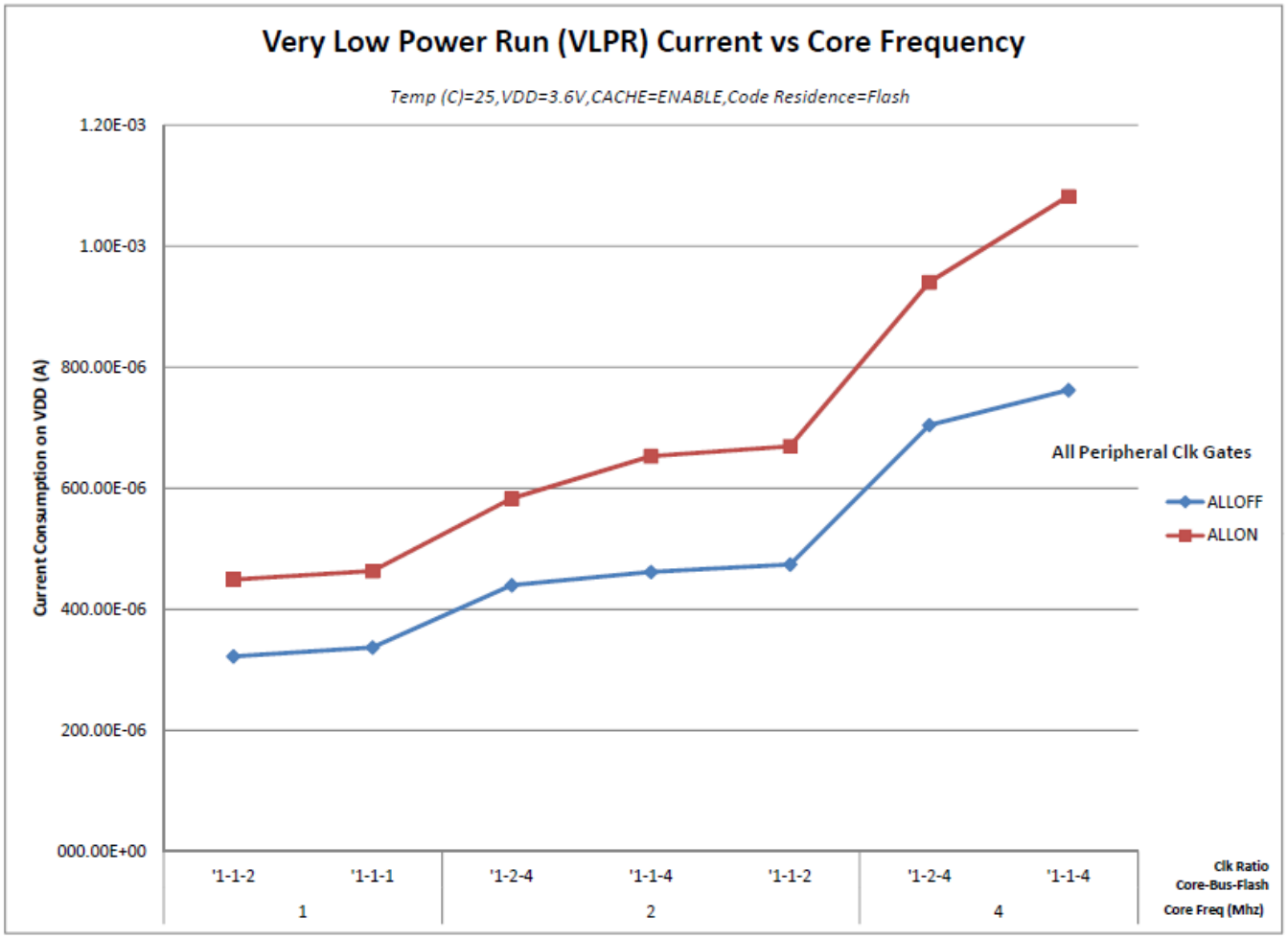

Figure 3. VLPR mode supply current vs. core frequency

5.2.6 EMC radiated emissions operating behaviors

Table 7. EMC radiated emissions operating behaviors 1

Symbol	Description	Frequency band (MHz)	Typ.	Unit	Notes
V_{RE1}	Radiated emissions voltage, band 1	0.15–50	19	dBμV	2, 3
V_{RE2}	Radiated emissions voltage, band 2	50–150	21	dBμV	
V_{RE3}	Radiated emissions voltage, band 3	150–500	19	dBμV	
V_{RE4}	Radiated emissions voltage, band 4	500–1000	11	dBμV	
V_{RE_IEC}	IEC level	0.15–1000	L	—	3, 4

1. This data was collected on a MK20DN128VLH5 64pin LQFP device.
2. Determined according to IEC Standard 61967-1, *Integrated Circuits - Measurement of Electromagnetic Emissions, 150 kHz to 1 GHz Part 1: General Conditions and Definitions* and IEC Standard 61967-2, *Integrated Circuits - Measurement of Electromagnetic Emissions, 150 kHz to 1 GHz Part 2: Measurement of Radiated Emissions—TEM Cell and Wideband TEM Cell Method*. Measurements were made while the microcontroller was running basic application code. The reported emission level is the value of the maximum measured emission, rounded up to the next whole number, from among the measured orientations in each frequency range.

3. V_{DD} = 3.3 V, T_A = 25 °C, f_{OSC} = 12 MHz (crystal), f_{SYS} = 48 MHz, f_{BUS} = 48MHz
4. Specified according to Annex D of IEC Standard 61967-2, *Measurement of Radiated Emissions—TEM Cell and Wideband TEM Cell Method*

5.2.7 Designing with radiated emissions in mind

To find application notes that provide guidance on designing your system to minimize interference from radiated emissions:

1. Go to www.freescale.com.
2. Perform a keyword search for "EMC design."

5.2.8 Capacitance attributes

Table 8. Capacitance attributes

Symbol	Description	Min.	Max.	Unit
C_{IN_A}	Input capacitance: analog pins	—	7	pF
C_{IN_D}	Input capacitance: digital pins	—	7	pF

5.3 Switching specifications

5.3.1 Device clock specifications

Table 9. Device clock specifications

Symbol	Description	Min.	Max.	Unit	Notes
	Normal run mode				
f_{SYS}	System and core clock	—	50	MHz	
f_{BUS}	Bus clock	—	50	MHz	
f_{FLASH}	Flash clock	—	25	MHz	
f_{LPTMR}	LPTMR clock	—	25	MHz	
	VLPR mode[1]				
f_{SYS}	System and core clock	—	4	MHz	
f_{BUS}	Bus clock	—	4	MHz	
f_{FLASH}	Flash clock	—	1	MHz	
f_{ERCLK}	External reference clock	—	16	MHz	
f_{LPTMR_pin}	LPTMR clock	—	25	MHz	
f_{LPTMR_ERCLK}	LPTMR external reference clock	—	16	MHz	
f_{I2S_MCLK}	I2S master clock	—	12.5	MHz	
f_{I2S_BCLK}	I2S bit clock	—	4	MHz	

1. The frequency limitations in VLPR mode here override any frequency specification listed in the timing specification for any other module.

5.3.2 General switching specifications

These general purpose specifications apply to all pins configured for:

- GPIO signaling
- Other peripheral module signaling not explicitly stated elsewhere

Table 10. General switching specifications

Symbol	Description	Min.	Max.	Unit	Notes
	GPIO pin interrupt pulse width (digital glitch filter disabled) — Synchronous path	1.5	—	Bus clock cycles	1, 2
	GPIO pin interrupt pulse width (digital glitch filter disabled, analog filter enabled) — Asynchronous path	100	—	ns	3
	GPIO pin interrupt pulse width (digital glitch filter disabled, analog filter disabled) — Asynchronous path	50	—	ns	3
	External reset pulse width (digital glitch filter disabled)	100	—	ns	3
	Port rise and fall time (high drive strength)				4
	• Slew disabled				
	• $1.71 \leq V_{DD} \leq 2.7V$	—	13	ns	
	• $2.7 \leq V_{DD} \leq 3.6V$	—	7	ns	
	• Slew enabled				
	• $1.71 \leq V_{DD} \leq 2.7V$	—	36	ns	
	• $2.7 \leq V_{DD} \leq 3.6V$	—	24	ns	
	Port rise and fall time (low drive strength)				5
	• Slew disabled				
	• $1.71 \leq V_{DD} \leq 2.7V$	—	12	ns	
	• $2.7 \leq V_{DD} \leq 3.6V$	—	6	ns	
	• Slew enabled				
	• $1.71 \leq V_{DD} \leq 2.7V$	—	36	ns	
	• $2.7 \leq V_{DD} \leq 3.6V$	—	24	ns	

1. This is the minimum pulse width that is guaranteed to pass through the pin synchronization circuitry. Shorter pulses may or may not be recognized. In Stop, VLPS, LLS, and VLLSx modes, the synchronizer is bypassed so shorter pulses can be recognized in that case.
2. The greater synchronous and asynchronous timing must be met.
3. This is the minimum pulse width that is guaranteed to be recognized as a pin interrupt request in Stop, VLPS, LLS, and VLLSx modes.
4. 75 pF load
5. 15 pF load

5.4 Thermal specifications

5.4.1 Thermal operating requirements

Table 11. Thermal operating requirements

Symbol	Description	Min.	Max.	Unit
T_J	Die junction temperature	–40	125	°C
T_A	Ambient temperature	–40	105	°C

5.4.2 Thermal attributes

Board type	Symbol	Description	80 LQFP	Unit	Notes
Single-layer (1s)	$R_{\theta JA}$	Thermal resistance, junction to ambient (natural convection)	50	°C/W	1, 2
Four-layer (2s2p)	$R_{\theta JA}$	Thermal resistance, junction to ambient (natural convection)	35	°C/W	1, 3
Single-layer (1s)	$R_{\theta JMA}$	Thermal resistance, junction to ambient (200 ft./ min. air speed)	39	°C/W	1,3
Four-layer (2s2p)	$R_{\theta JMA}$	Thermal resistance, junction to ambient (200 ft./ min. air speed)	29	°C/W	1,3
—	$R_{\theta JB}$	Thermal resistance, junction to board	19	°C/W	4
—	$R_{\theta JC}$	Thermal resistance, junction to case	8	°C/W	5
—	Ψ_{JT}	Thermal characterization parameter, junction to package top outside center (natural convection)	2	°C/W	6

1. Junction temperature is a function of die size, on-chip power dissipation, package thermal resistance, mounting site (board) temperature, ambient temperature, air flow, power dissipation of other components on the board, and board thermal resistance.
2. Determined according to JEDEC Standard JESD51-2, *Integrated Circuits Thermal Test Method Environmental Conditions—Natural Convection (Still Air)* with the single layer board horizontal. For the LQFP, the board meets the JESD51-3 specification. For the MAPBGA, the board meets the JESD51-9 specification.

3. Determined according to JEDEC Standard JESD51-6, *Integrated Circuits Thermal Test Method Environmental Conditions—Forced Convection (Moving Air)* with the board horizontal.
4. Determined according to JEDEC Standard JESD51-8, *Integrated Circuit Thermal Test Method Environmental Conditions—Junction-to-Board*. Board temperature is measured on the top surface of the board near the package.
5. Determined according to Method 1012.1 of MIL-STD 883, *Test Method Standard, Microcircuits*, with the cold plate temperature used for the case temperature. The value includes the thermal resistance of the interface material between the top of the package and the cold plate.
6. Determined according to JEDEC Standard JESD51-2, *Integrated Circuits Thermal Test Method Environmental Conditions—Natural Convection (Still Air)*.

6 Peripheral operating requirements and behaviors

6.1 Core modules

6.1.1 JTAG electricals

Table 12. JTAG limited voltage range electricals

Symbol	Description	Min.	Max.	Unit
	Operating voltage	2.7	3.6	V
J1	TCLK frequency of operation			MHz
	• Boundary Scan	0	10	
	• JTAG and CJTAG	0	25	
	• Serial Wire Debug	0	50	
J2	TCLK cycle period	1/J1	—	ns
J3	TCLK clock pulse width			
	• Boundary Scan	50	—	ns
	• JTAG and CJTAG	20	—	ns
	• Serial Wire Debug	10	—	ns
J4	TCLK rise and fall times	—	3	ns
J5	Boundary scan input data setup time to TCLK rise	20	—	ns
J6	Boundary scan input data hold time after TCLK rise	0	—	ns
J7	TCLK low to boundary scan output data valid	—	25	ns
J8	TCLK low to boundary scan output high-Z	—	25	ns
J9	TMS, TDI input data setup time to TCLK rise	8	—	ns
J10	TMS, TDI input data hold time after TCLK rise	1	—	ns
J11	TCLK low to TDO data valid	—	17	ns
J12	TCLK low to TDO high-Z	—	17	ns
J13	$\overline{\text{TRST}}$ assert time	100	—	ns
J14	$\overline{\text{TRST}}$ setup time (negation) to TCLK high	8	—	ns

Table 13. JTAG full voltage range electricals

Symbol	Description	Min.	Max.	Unit
	Operating voltage	1.71	3.6	V
J1	TCLK frequency of operation			MHz
	• Boundary Scan	0	10	
	• JTAG and CJTAG	0	20	
	• Serial Wire Debug	0	40	
J2	TCLK cycle period	1/J1	—	ns
J3	TCLK clock pulse width			
	• Boundary Scan	50	—	ns
	• JTAG and CJTAG	25	—	ns
	• Serial Wire Debug	12.5	—	ns
J4	TCLK rise and fall times	—	3	ns
J5	Boundary scan input data setup time to TCLK rise	20	—	ns
J6	Boundary scan input data hold time after TCLK rise	0	—	ns
J7	TCLK low to boundary scan output data valid	—	25	ns
J8	TCLK low to boundary scan output high-Z	—	25	ns
J9	TMS, TDI input data setup time to TCLK rise	8	—	ns
J10	TMS, TDI input data hold time after TCLK rise	1.4	—	ns
J11	TCLK low to TDO data valid	—	22.1	ns
J12	TCLK low to TDO high-Z	—	22.1	ns
J13	$\overline{\text{TRST}}$ assert time	100	—	ns
J14	$\overline{\text{TRST}}$ setup time (negation) to TCLK high	8	—	ns

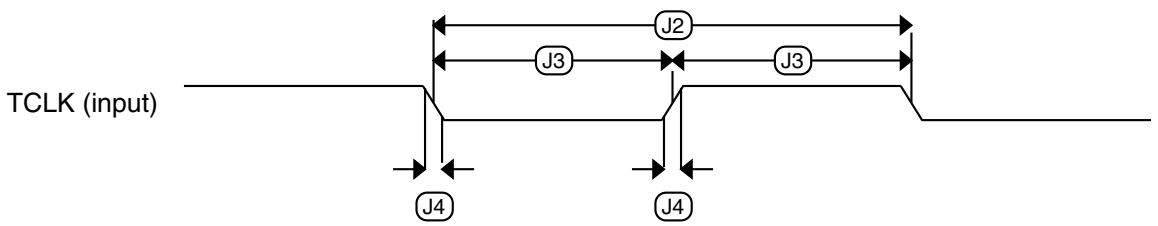

Figure 4. Test clock input timing

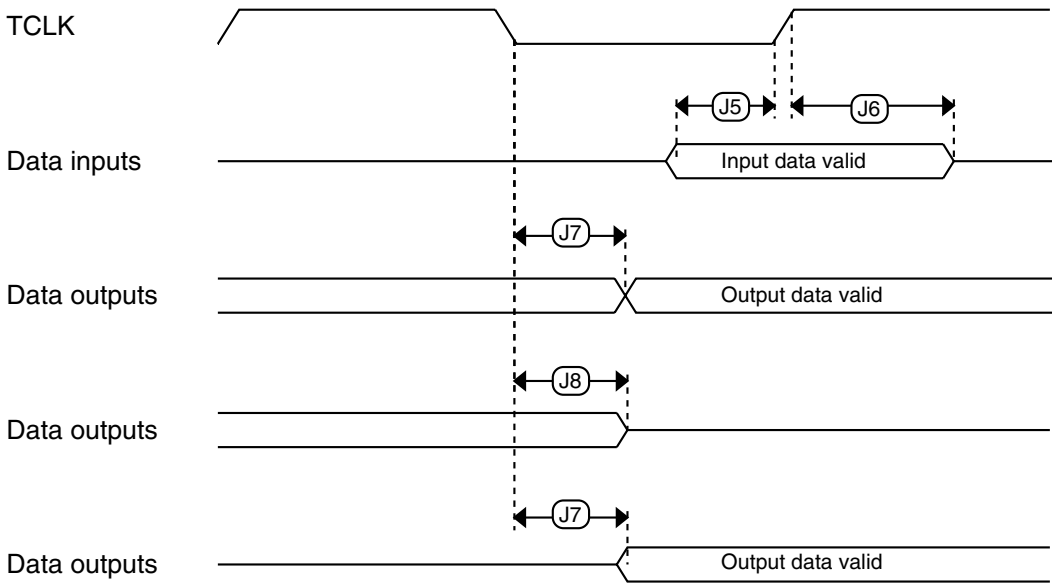

Figure 5. Boundary scan (JTAG) timing

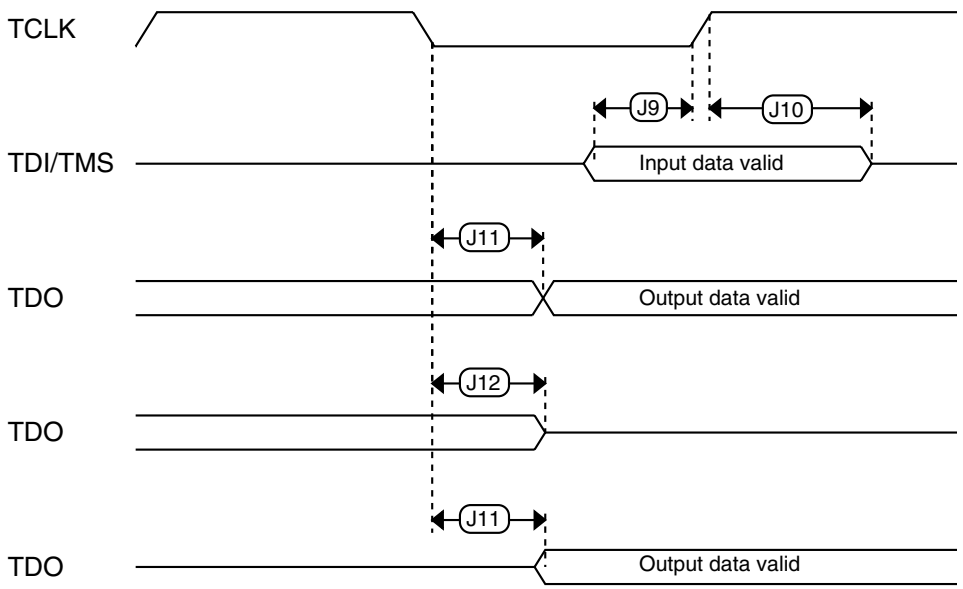

Figure 6. Test Access Port timing

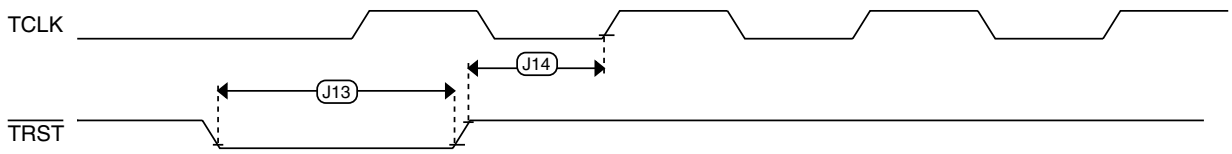

Figure 7. $\overline{\text{TRST}}$ timing

6.2 System modules

There are no specifications necessary for the device's system modules.

6.3 Clock modules

6.3.1 MCG specifications

Table 14. MCG specifications

Symbol	Description	Min.	Typ.	Max.	Unit	Notes
f_{ints_ft}	Internal reference frequency (slow clock) — factory trimmed at nominal VDD and 25 °C	—	32.768	—	kHz	
f_{ints_t}	Internal reference frequency (slow clock) — user trimmed	31.25	—	39.0625	kHz	
$\Delta_{fdco_res_t}$	Resolution of trimmed average DCO output frequency at fixed voltage and temperature — using SCTRIM and SCFTRIM	—	± 0.3	± 0.6	$\%f_{dco}$	1
$\Delta f_{dco_res_t}$	Resolution of trimmed average DCO output frequency at fixed voltage and temperature — using SCTRIM only	—	± 0.2	± 0.5	$\%f_{dco}$	1
Δf_{dco_t}	Total deviation of trimmed average DCO output frequency over voltage and temperature	—	+0.5/-0.7	± 2	$\%f_{dco}$	1, 2
Δf_{dco_t}	Total deviation of trimmed average DCO output frequency over fixed voltage and temperature range of 0–70°C	—	± 0.3	±1	$\%f_{dco}$	1, 2
f_{intf_ft}	Internal reference frequency (fast clock) — factory trimmed at nominal VDD and 25°C	—	4	—	MHz	
f_{intf_t}	Internal reference frequency (fast clock) — user trimmed at nominal VDD and 25 °C	3	—	5	MHz	
f_{loc_low}	Loss of external clock minimum frequency — RANGE = 00	(3/5) x f_{ints_t}	—	—	kHz	
f_{loc_high}	Loss of external clock minimum frequency — RANGE = 01, 10, or 11	(16/5) x f_{ints_t}	—	—	kHz	

Table continues on the next page...

Table 14. MCG specifications (continued)

Symbol	Description		Min.	Typ.	Max.	Unit	Notes
			FLL				
f_{fll_ref}	FLL reference frequency range		31.25	—	39.0625	kHz	
f_{dco}	DCO output frequency range	Low range (DRS=00) $640 \times f_{fll_ref}$	20	20.97	25	MHz	3, 4
		Mid range (DRS=01) $1280 \times f_{fll_ref}$	40	41.94	50	MHz	
		Mid-high range (DRS=10) $1920 \times f_{fll_ref}$	60	62.91	75	MHz	
		High range (DRS=11) $2560 \times f_{fll_ref}$	80	83.89	100	MHz	
$f_{dco_t_DMX32}$	DCO output frequency	Low range (DRS=00) $732 \times f_{fll_ref}$	—	23.99	—	MHz	5, 6
		Mid range (DRS=01) $1464 \times f_{fll_ref}$	—	47.97	—	MHz	
		Mid-high range (DRS=10) $2197 \times f_{fll_ref}$	—	71.99	—	MHz	
		High range (DRS=11) $2929 \times f_{fll_ref}$	—	95.98	—	MHz	
J_{cyc_fll}	FLL period jitter • f_{DCO} = 48 MHz • f_{DCO} = 98 MHz		— —	180 150	— —	ps	
$t_{fll_acquire}$	FLL target frequency acquisition time		—	—	1	ms	7
			PLL				
f_{vco}	VCO operating frequency		48.0	—	100	MHz	
I_{pll}	PLL operating current • PLL @ 96 MHz ($f_{osc_hi_1}$ = 8 MHz, f_{pll_ref} = 2 MHz, VDIV multiplier = 48)		—	1060	—	μA	8
I_{pll}	PLL operating current • PLL @ 48 MHz ($f_{osc_hi_1}$ = 8 MHz, f_{pll_ref} = 2 MHz, VDIV multiplier = 24)		—	600	—	μA	8
f_{pll_ref}	PLL reference frequency range		2.0	—	4.0	MHz	
J_{cyc_pll}	PLL period jitter (RMS) • f_{vco} = 48 MHz • f_{vco} = 100 MHz		— —	120 50	— —	ps ps	9
J_{acc_pll}	PLL accumulated jitter over 1μs (RMS) • f_{vco} = 48 MHz • f_{vco} = 100 MHz		— —	1350 600	— —	ps ps	9
D_{lock}	Lock entry frequency tolerance		± 1.49	—	± 2.98	%	
D_{unl}	Lock exit frequency tolerance		± 4.47	—	± 5.97	%	

Table continues on the next page...

Table 14. MCG specifications (continued)

Symbol	Description	Min.	Typ.	Max.	Unit	Notes
t_{pll_lock}	Lock detector detection time	—	—	$150 \times 10^{-6} + 1075(1/f_{pll_ref})$	s	10

1. This parameter is measured with the internal reference (slow clock) being used as a reference to the FLL (FEI clock mode).
2. 2 V <= VDD <= 3.6 V.
3. These typical values listed are with the slow internal reference clock (FEI) using factory trim and DMX32=0.
4. The resulting system clock frequencies should not exceed their maximum specified values. The DCO frequency deviation (Δf_{dco_t}) over voltage and temperature should be considered.
5. These typical values listed are with the slow internal reference clock (FEI) using factory trim and DMX32=1.
6. The resulting clock frequency must not exceed the maximum specified clock frequency of the device.
7. This specification applies to any time the FLL reference source or reference divider is changed, trim value is changed, DMX32 bit is changed, DRS bits are changed, or changing from FLL disabled (BLPE, BLPI) to FLL enabled (FEI, FEE, FBE, FBI). If a crystal/resonator is being used as the reference, this specification assumes it is already running.
8. Excludes any oscillator currents that are also consuming power while PLL is in operation.
9. This specification was obtained using a Freescale developed PCB. PLL jitter is dependent on the noise characteristics of each PCB and results will vary.
10. This specification applies to any time the PLL VCO divider or reference divider is changed, or changing from PLL disabled (BLPE, BLPI) to PLL enabled (PBE, PEE). If a crystal/resonator is being used as the reference, this specification assumes it is already running.

6.3.2 Oscillator electrical specifications

6.3.2.1 Oscillator DC electrical specifications

Table 15. Oscillator DC electrical specifications

Symbol	Description	Min.	Typ.	Max.	Unit	Notes
V_{DD}	Supply voltage	1.71	—	3.6	V	
I_{DDOSC}	Supply current — low-power mode (HGO=0)					1
	• 32 kHz	—	500	—	nA	
	• 4 MHz	—	200	—	μA	
	• 8 MHz (RANGE=01)	—	300	—	μA	
	• 16 MHz	—	950	—	μA	
	• 24 MHz	—	1.2	—	mA	
	• 32 MHz	—	1.5	—	mA	

Table continues on the next page...

Table 15. Oscillator DC electrical specifications (continued)

Symbol	Description	Min.	Typ.	Max.	Unit	Notes
I_{DDOSC}	Supply current — high-gain mode (HGO=1)					1
	• 32 kHz	—	25	—	μA	
	• 4 MHz	—	400	—	μA	
	• 8 MHz (RANGE=01)	—	500	—	μA	
	• 16 MHz	—	2.5	—	mA	
	• 24 MHz	—	3	—	mA	
	• 32 MHz	—	4	—	mA	
C_x	EXTAL load capacitance	—	—	—		2, 3
C_y	XTAL load capacitance	—	—	—		2, 3
R_F	Feedback resistor — low-frequency, low-power mode (HGO=0)	—	—	—	MΩ	2, 4
	Feedback resistor — low-frequency, high-gain mode (HGO=1)	—	10	—	MΩ	
	Feedback resistor — high-frequency, low-power mode (HGO=0)	—	—	—	MΩ	
	Feedback resistor — high-frequency, high-gain mode (HGO=1)	—	1	—	MΩ	
R_S	Series resistor — low-frequency, low-power mode (HGO=0)	—	—	—	kΩ	
	Series resistor — low-frequency, high-gain mode (HGO=1)	—	200	—	kΩ	
	Series resistor — high-frequency, low-power mode (HGO=0)	—	—	—	kΩ	
	Series resistor — high-frequency, high-gain mode (HGO=1)	—	0	—	kΩ	
V_{pp}[5]	Peak-to-peak amplitude of oscillation (oscillator mode) — low-frequency, low-power mode (HGO=0)	—	0.6	—	V	
	Peak-to-peak amplitude of oscillation (oscillator mode) — low-frequency, high-gain mode (HGO=1)	—	V_{DD}	—	V	
	Peak-to-peak amplitude of oscillation (oscillator mode) — high-frequency, low-power mode (HGO=0)	—	0.6	—	V	
	Peak-to-peak amplitude of oscillation (oscillator mode) — high-frequency, high-gain mode (HGO=1)	—	V_{DD}	—	V	

1. V_{DD}=3.3 V, Temperature =25 °C
2. See crystal or resonator manufacturer's recommendation
3. C_x and C_y can be provided by using either integrated capacitors or external components.
4. When low-power mode is selected, R_F is integrated and must not be attached externally.
5. The EXTAL and XTAL pins should only be connected to required oscillator components and must not be connected to any other device.

6.3.2.2 Oscillator frequency specifications

Table 16. Oscillator frequency specifications

Symbol	Description	Min.	Typ.	Max.	Unit	Notes
f_{osc_lo}	Oscillator crystal or resonator frequency — low-frequency mode (MCG_C2[RANGE]=00)	32	—	40	kHz	
$f_{osc_hi_1}$	Oscillator crystal or resonator frequency — high-frequency mode (low range) (MCG_C2[RANGE]=01)	3	—	8	MHz	
$f_{osc_hi_2}$	Oscillator crystal or resonator frequency — high frequency mode (high range) (MCG_C2[RANGE]=1x)	8	—	32	MHz	
f_{ec_extal}	Input clock frequency (external clock mode)	—	—	50	MHz	1, 2
t_{dc_extal}	Input clock duty cycle (external clock mode)	40	50	60	%	
t_{cst}	Crystal startup time — 32 kHz low-frequency, low-power mode (HGO=0)	—	750	—	ms	3, 4
	Crystal startup time — 32 kHz low-frequency, high-gain mode (HGO=1)	—	250	—	ms	
	Crystal startup time — 8 MHz high-frequency (MCG_C2[RANGE]=01), low-power mode (HGO=0)	—	0.6	—	ms	
	Crystal startup time — 8 MHz high-frequency (MCG_C2[RANGE]=01), high-gain mode (HGO=1)	—	1	—	ms	

1. Other frequency limits may apply when external clock is being used as a reference for FLL or PLL.
2. When transitioning from FBE to FEI mode, restrict the frequency of the input clock so that—it remains within the limits of DCO input clock frequency when divided by FRDIV.
3. Proper PC board layout procedures must be followed to achieve specifications.
4. Crystal startup time is defined as the time between oscillator being enabled and OSCINIT bit in the MCG_S register being set.

NOTE

The 32 kHz oscillator works in low power mode by default and cannot be moved into high power/gain mode.

6.3.3 32 kHz oscillator electrical characteristics

6.3.3.1 32 kHz oscillator DC electrical specifications

Table 17. 32kHz oscillator DC electrical specifications

Symbol	Description	Min.	Typ.	Max.	Unit
V_{BAT}	Supply voltage	1.71	—	3.6	V
R_F	Internal feedback resistor	—	100	—	MΩ
C_{para}	Parasitical capacitance of EXTAL32 and XTAL32	—	5	7	pF

Table continues on the next page...

Table 17. 32kHz oscillator DC electrical specifications (continued)

Symbol	Description	Min.	Typ.	Max.	Unit
V_{pp}[1]	Peak-to-peak amplitude of oscillation	—	0.6	—	V

1. When a crystal is being used with the 32 kHz oscillator, the EXTAL32 and XTAL32 pins should only be connected to required oscillator components and must not be connected to any other devices.

6.3.3.2 32 kHz oscillator frequency specifications

Table 18. 32 kHz oscillator frequency specifications

Symbol	Description	Min.	Typ.	Max.	Unit	Notes
f_{osc_lo}	Oscillator crystal	—	32.768	—	kHz	
t_{start}	Crystal start-up time	—	1000	—	ms	1
$v_{ec_extal32}$	Externally provided input clock amplitude	700	—	V_{BAT}	mV	2, 3

1. Proper PC board layout procedures must be followed to achieve specifications.
2. This specification is for an externally supplied clock driven to EXTAL32 and does not apply to any other clock input. The oscillator remains enabled and XTAL32 must be left unconnected.
3. The parameter specified is a peak-to-peak value and V_{IH} and V_{IL} specifications do not apply. The voltage of the applied clock must be within the range of V_{SS} to V_{BAT}.

6.4 Memories and memory interfaces

6.4.1 Flash electrical specifications

This section describes the electrical characteristics of the flash memory module.

6.4.1.1 Flash timing specifications — program and erase

The following specifications represent the amount of time the internal charge pumps are active and do not include command overhead.

Table 19. NVM program/erase timing specifications

Symbol	Description	Min.	Typ.	Max.	Unit	Notes
t_{hvpgm4}	Longword Program high-voltage time	—	7.5	18	μs	
$t_{hversscr}$	Sector Erase high-voltage time	—	13	113	ms	1
$t_{hversblk256k}$	Erase Block high-voltage time for 256 KB	—	104	904	ms	1

1. Maximum time based on expectations at cycling end-of-life.

6.4.1.2 Flash timing specifications — commands

Table 20. Flash command timing specifications

Symbol	Description	Min.	Typ.	Max.	Unit	Notes
	Read 1s Block execution time					
$t_{rd1blk64k}$	• 64 KB data flash	—	—	0.9	ms	
$t_{rd1blk256k}$	• 256 KB program flash	—	—	1.7	ms	
$t_{rd1sec2k}$	Read 1s Section execution time (flash sector)	—	—	60	μs	1
t_{pgmchk}	Program Check execution time	—	—	45	μs	1
t_{rdrsrc}	Read Resource execution time	—	—	30	μs	1
t_{pgm4}	Program Longword execution time	—	65	145	μs	
	Erase Flash Block execution time					2
$t_{ersblk64k}$	• 64 KB data flash	—	58	580	ms	
$t_{ersblk256k}$	• 256 KB program flash	—	122	985	ms	
t_{ersscr}	Erase Flash Sector execution time	—	14	114	ms	2
	Program Section execution time					
$t_{pgmsec512}$	• 512 bytes flash	—	2.4	—	ms	
$t_{pgmsec1k}$	• 1 KB flash	—	4.7	—	ms	
$t_{pgmsec2k}$	• 2 KB flash	—	9.3	—	ms	
t_{rd1all}	Read 1s All Blocks execution time	—	—	1.8	ms	
t_{rdonce}	Read Once execution time	—	—	25	μs	1
$t_{pgmonce}$	Program Once execution time	—	65	—	μs	
t_{ersall}	Erase All Blocks execution time	—	250	2000	ms	2
t_{vfykey}	Verify Backdoor Access Key execution time	—	—	30	μs	1
	Swap Control execution time					
$t_{swapx01}$	• control code 0x01	—	200	—	μs	
$t_{swapx02}$	• control code 0x02	—	70	150	μs	
$t_{swapx04}$	• control code 0x04	—	70	150	μs	
$t_{swapx08}$	• control code 0x08	—	—	30	μs	
	Program Partition for EEPROM execution time					
$t_{pgmpart64k}$	• 64 KB FlexNVM	—	138	—	ms	
	Set FlexRAM Function execution time:					
$t_{setramff}$	• Control Code 0xFF	—	70	—	μs	
$t_{setram32k}$	• 32 KB EEPROM backup	—	0.8	1.2	ms	
$t_{setram64k}$	• 64 KB EEPROM backup	—	1.3	1.9	ms	
Byte-write to FlexRAM for EEPROM operation						
$t_{eewr8bers}$	Byte-write to erased FlexRAM location execution time	—	175	260	μs	3

Table continues on the next page...

Table 20. Flash command timing specifications (continued)

Symbol	Description	Min.	Typ.	Max.	Unit	Notes
	Byte-write to FlexRAM execution time:					
$t_{eewr8b32k}$	• 32 KB EEPROM backup	—	385	1800	μs	
$t_{eewr8b64k}$	• 64 KB EEPROM backup		475	2000	μs	
Word-write to FlexRAM for EEPROM operation						
$t_{eewr16bers}$	Word-write to erased FlexRAM location execution time	—	175	260	μs	
	Word-write to FlexRAM execution time:					
$t_{eewr16b32k}$	• 32 KB EEPROM backup	—	385	1800	μs	
$t_{eewr16b64k}$	• 64 KB EEPROM backup	—	475	2000	μs	
Longword-write to FlexRAM for EEPROM operation						
$t_{eewr32bers}$	Longword-write to erased FlexRAM location execution time	—	360	540	μs	
	Longword-write to FlexRAM execution time:					
$t_{eewr32b32k}$	• 32 KB EEPROM backup	—	630	2050	μs	
$t_{eewr32b64k}$	• 64 KB EEPROM backup	—	810	2250	μs	

1. Assumes 25 MHz flash clock frequency.
2. Maximum times for erase parameters based on expectations at cycling end-of-life.
3. For byte-writes to an erased FlexRAM location, the aligned word containing the byte must be erased.

6.4.1.3 Flash high voltage current behaviors

Table 21. Flash high voltage current behaviors

Symbol	Description	Min.	Typ.	Max.	Unit
I_{DD_PGM}	Average current adder during high voltage flash programming operation	—	2.5	6.0	mA
I_{DD_ERS}	Average current adder during high voltage flash erase operation	—	1.5	4.0	mA

6.4.1.4 Reliability specifications

Table 22. NVM reliability specifications

Symbol	Description	Min.	Typ.[1]	Max.	Unit	Notes
Program Flash						
$t_{nvmretp10k}$	Data retention after up to 10 K cycles	5	50	—	years	
$t_{nvmretp1k}$	Data retention after up to 1 K cycles	20	100	—	years	
$n_{nvmcycp}$	Cycling endurance	10 K	50 K	—	cycles	2
Data Flash						
$t_{nvmretd10k}$	Data retention after up to 10 K cycles	5	50	—	years	

Table continues on the next page...

Table 22. NVM reliability specifications (continued)

Symbol	Description	Min.	Typ.[1]	Max.	Unit	Notes
$t_{nvmretd1k}$	Data retention after up to 1 K cycles	20	100	—	years	
$n_{nvmcycd}$	Cycling endurance	10 K	50 K	—	cycles	2
	FlexRAM as EEPROM					
$t_{nvmretee100}$	Data retention up to 100% of write endurance	5	50	—	years	
$t_{nvmretee10}$	Data retention up to 10% of write endurance	20	100	—	years	
	Write endurance					3
$n_{nvmwree16}$	• EEPROM backup to FlexRAM ratio = 16	35 K	175 K	—	writes	
$n_{nvmwree128}$	• EEPROM backup to FlexRAM ratio = 128	315 K	1.6 M	—	writes	
$n_{nvmwree512}$	• EEPROM backup to FlexRAM ratio = 512	1.27 M	6.4 M	—	writes	
$n_{nvmwree4k}$	• EEPROM backup to FlexRAM ratio = 4096	10 M	50 M	—	writes	

1. Typical data retention values are based on measured response accelerated at high temperature and derated to a constant 25 °C use profile. Engineering Bulletin EB618 does not apply to this technology. Typical endurance defined in Engineering Bulletin EB619.
2. Cycling endurance represents number of program/erase cycles at -40 °C ≤ T_j ≤ °C.
3. Write endurance represents the number of writes to each FlexRAM location at -40 °C ≤Tj ≤ °C influenced by the cycling endurance of the FlexNVM (same value as data flash) and the allocated EEPROM backup per subsystem. Minimum and typical values assume all byte-writes to FlexRAM.

6.4.2 EzPort switching specifications

Table 23. EzPort switching specifications

Num	Description	Min.	Max.	Unit
	Operating voltage	1.71	3.6	V
EP1	EZP_CK frequency of operation (all commands except READ)	—	$f_{SYS}/2$	MHz
EP1a	EZP_CK frequency of operation (READ command)	—	$f_{SYS}/8$	MHz
EP2	$\overline{EZP_CS}$ negation to next $\overline{EZP_CS}$ assertion	2 x t_{EZP_CK}	—	ns
EP3	$\overline{EZP_CS}$ input valid to EZP_CK high (setup)	5	—	ns
EP4	EZP_CK high to $\overline{EZP_CS}$ input invalid (hold)	5	—	ns
EP5	EZP_D input valid to EZP_CK high (setup)	2	—	ns
EP6	EZP_CK high to EZP_D input invalid (hold)	5	—	ns
EP7	EZP_CK low to EZP_Q output valid	—		ns
EP8	EZP_CK low to EZP_Q output invalid (hold)	0	—	ns
EP9	$\overline{EZP_CS}$ negation to EZP_Q tri-state	—	12	ns

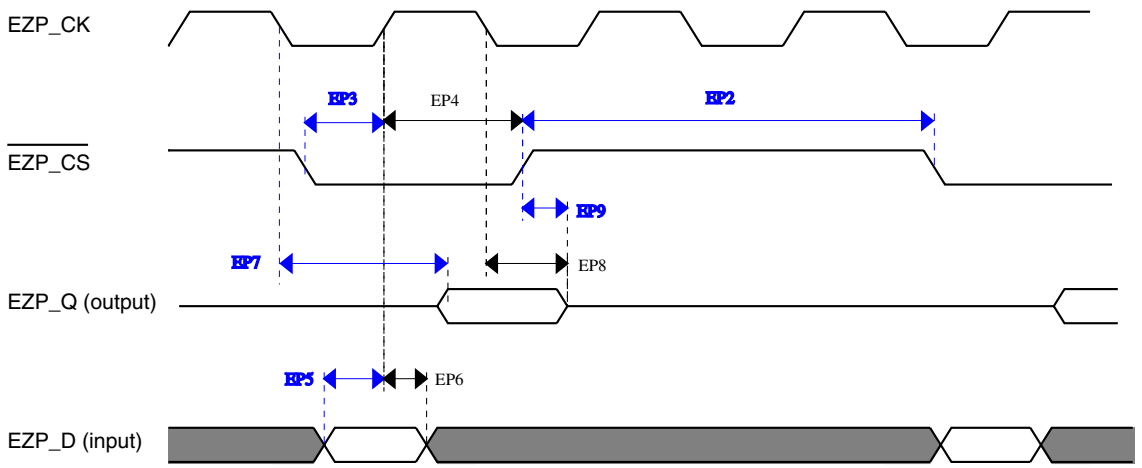

Figure 8. EzPort Timing Diagram

6.5 Security and integrity modules

There are no specifications necessary for the device's security and integrity modules.

6.6 Analog

6.6.1 ADC electrical specifications

The 16-bit accuracy specifications listed in Table 24 and Table 25 are achievable on the differential pins ADCx_DP0, ADCx_DM0.

All other ADC channels meet the 13-bit differential/12-bit single-ended accuracy specifications.

6.6.1.1 16-bit ADC operating conditions

Table 24. 16-bit ADC operating conditions

Symbol	Description	Conditions	Min.	Typ.[1]	Max.	Unit	Notes
V_{DDA}	Supply voltage	Absolute	1.71	—	3.6	V	
ΔV_{DDA}	Supply voltage	Delta to V_{DD} ($V_{DD} – V_{DDA}$)	-100	0	+100	mV	2
ΔV_{SSA}	Ground voltage	Delta to V_{SS} ($V_{SS} – V_{SSA}$)	-100	0	+100	mV	2

Table continues on the next page...

Table 24. 16-bit ADC operating conditions (continued)

Symbol	Description	Conditions	Min.	Typ.[1]	Max.	Unit	Notes
V_{REFH}	ADC reference voltage high		1.13	V_{DDA}	V_{DDA}	V	
V_{REFL}	ADC reference voltage low		V_{SSA}	V_{SSA}	V_{SSA}	V	
V_{ADIN}	Input voltage	• 16-bit differential mode • All other modes	VREFL VREFL	— —	31/32 * VREFH VREFH	V	
C_{ADIN}	Input capacitance	• 16-bit mode • 8-bit / 10-bit / 12-bit modes	— —	8 4	10 5	pF	
R_{ADIN}	Input resistance		—	2	5	kΩ	
R_{AS}	Analog source resistance	13-bit / 12-bit modes f_{ADCK} < 4 MHz	—	—	5	kΩ	3
f_{ADCK}	ADC conversion clock frequency	≤ 13-bit mode	1.0	—	18.0	MHz	4
f_{ADCK}	ADC conversion clock frequency	16-bit mode	2.0	—	12.0	MHz	4
C_{rate}	ADC conversion rate	≤ 13-bit modes No ADC hardware averaging Continuous conversions enabled, subsequent conversion time	20.000	—	818.330	Ksps	5
C_{rate}	ADC conversion rate	16-bit mode No ADC hardware averaging Continuous conversions enabled, subsequent conversion time	37.037	—	461.467	Ksps	5

1. Typical values assume V_{DDA} = 3.0 V, Temp = 25 °C, f_{ADCK} = 1.0 MHz, unless otherwise stated. Typical values are for reference only, and are not tested in production.
2. DC potential difference.
3. This resistance is external to MCU. To achieve the best results, the analog source resistance must be kept as low as possible. The results in this data sheet were derived from a system that had < 8 Ω analog source resistance. The R_{AS}/C_{AS} time constant should be kept to < 1 ns.
4. To use the maximum ADC conversion clock frequency, CFG2[ADHSC] must be set and CFG1[ADLPC] must be clear.
5. For guidelines and examples of conversion rate calculation, download the ADC calculator tool.

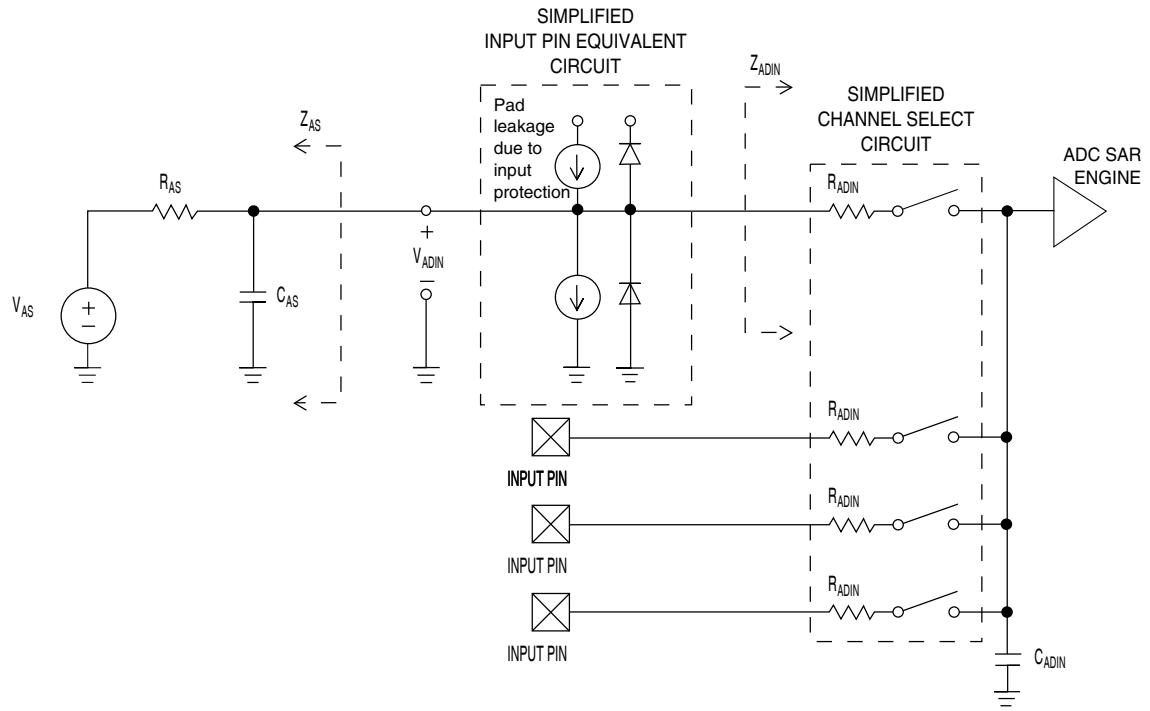

Figure 9. ADC input impedance equivalency diagram

6.6.1.2 16-bit ADC electrical characteristics

Table 25. 16-bit ADC characteristics ($V_{REFH} = V_{DDA}$, $V_{REFL} = V_{SSA}$)

Symbol	Description	Conditions[1].	Min.	Typ.[2]	Max.	Unit	Notes
I_{DDA_ADC}	Supply current		0.215	—	1.7	mA	3
f_{ADACK}	ADC asynchronous clock source	• ADLPC = 1, ADHSC = 0 • ADLPC = 1, ADHSC = 1 • ADLPC = 0, ADHSC = 0 • ADLPC = 0, ADHSC = 1	1.2 2.4 3.0 4.4	2.4 4.0 5.2 6.2	3.9 6.1 7.3 9.5	MHz MHz MHz MHz	$t_{ADACK} = 1/f_{ADACK}$
	Sample Time	See Reference Manual chapter for sample times					
TUE	Total unadjusted error	• 12-bit modes • <12-bit modes	— —	±4 ±1.4	±6.8 ±2.1	LSB[4]	5
DNL	Differential non-linearity	• 12-bit modes • <12-bit modes	— —	±0.7 ±0.2	-1.1 to +1.9 -0.3 to 0.5	LSB[4]	5
INL	Integral non-linearity	• 12-bit modes • <12-bit modes	— —	±1.0 ±0.5	-2.7 to +1.9 -0.7 to +0.5	LSB[4]	5
E_{FS}	Full-scale error	• 12-bit modes • <12-bit modes	— —	-4 -1.4	-5.4 -1.8	LSB[4]	$V_{ADIN} = V_{DDA}$ 5

Table continues on the next page...

Table 25. 16-bit ADC characteristics ($V_{REFH} = V_{DDA}$, $V_{REFL} = V_{SSA}$) (continued)

Symbol	Description	Conditions[1].	Min.	Typ.[2]	Max.	Unit	Notes
E_Q	Quantization error	• 16-bit modes • ≤13-bit modes	— —	-1 to 0 —	— ±0.5	LSB[4]	
ENOB	Effective number of bits	16-bit differential mode • Avg = 32 • Avg = 4 16-bit single-ended mode • Avg = 32 • Avg = 4	 12.8 11.9 12.2 11.4	 14.5 13.8 13.9 13.1	 — — — —	 bits bits bits bits	6
SINAD	Signal-to-noise plus distortion	See ENOB	6.02 × ENOB + 1.76			dB	
THD	Total harmonic distortion	16-bit differential mode • Avg = 32 16-bit single-ended mode • Avg = 32	 — —	 –94 -85	 — —	 dB dB	7
SFDR	Spurious free dynamic range	16-bit differential mode • Avg = 32 16-bit single-ended mode • Avg = 32	 82 78	 95 90	 — —	 dB dB	7
E_{IL}	Input leakage error		$I_{In} \times R_{AS}$			mV	I_{In} = leakage current (refer to the MCU's voltage and current operating ratings)
	Temp sensor slope	Across the full temperature range of the device	1.55	1.62	1.69	mV/°C	8
V_{TEMP25}	Temp sensor voltage	25 °C	706	716	726	mV	8

1. All accuracy numbers assume the ADC is calibrated with $V_{REFH} = V_{DDA}$
2. Typical values assume V_{DDA} = 3.0 V, Temp = 25 °C, f_{ADCK} = 2.0 MHz unless otherwise stated. Typical values are for reference only and are not tested in production.
3. The ADC supply current depends on the ADC conversion clock speed, conversion rate and ADC_CFG1[ADLPC] (low power). For lowest power operation, ADC_CFG1[ADLPC] must be set, the ADC_CFG2[ADHSC] bit must be clear with 1 MHz ADC conversion clock speed.
4. 1 LSB = $(V_{REFH} - V_{REFL})/2^N$
5. ADC conversion clock < 16 MHz, Max hardware averaging (AVGE = %1, AVGS = %11)
6. Input data is 100 Hz sine wave. ADC conversion clock < 12 MHz.
7. Input data is 1 kHz sine wave. ADC conversion clock < 12 MHz.

8. ADC conversion clock < 3 MHz

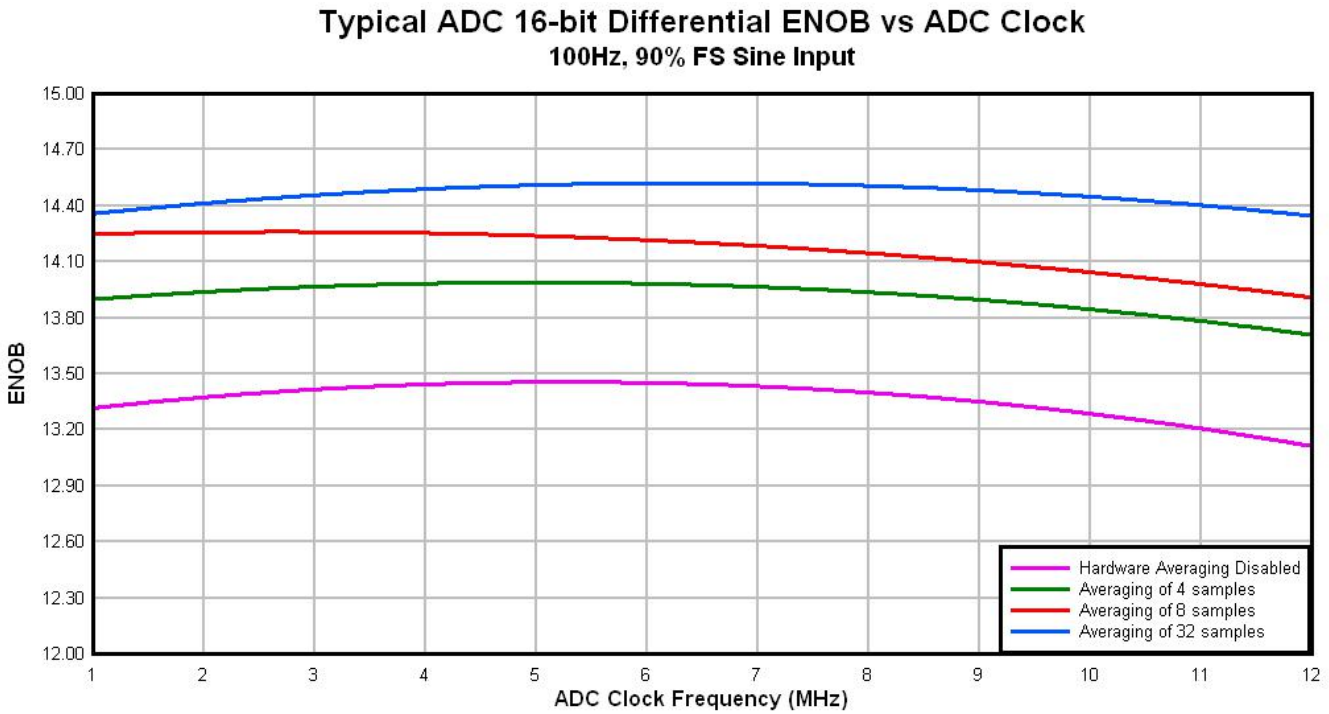

Figure 10. Typical ENOB vs. ADC_CLK for 16-bit differential mode

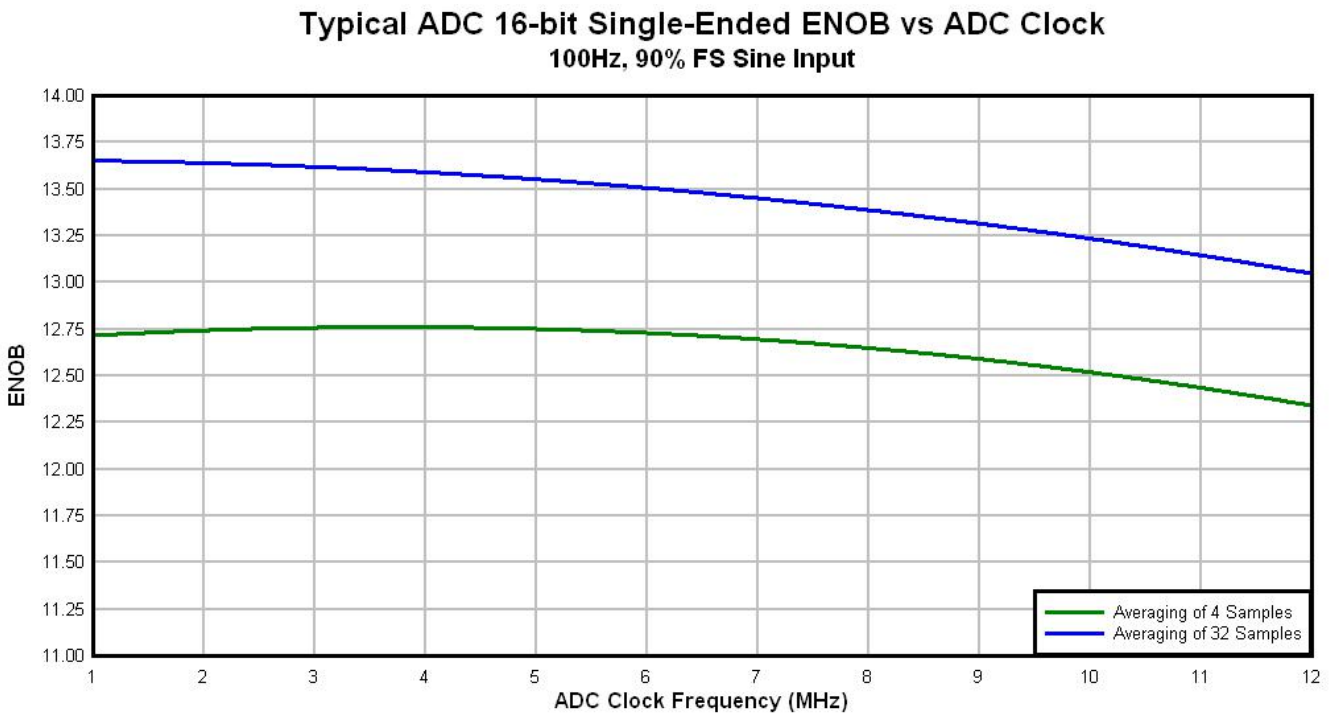

Figure 11. Typical ENOB vs. ADC_CLK for 16-bit single-ended mode

6.6.2 CMP and 6-bit DAC electrical specifications

Table 26. Comparator and 6-bit DAC electrical specifications

Symbol	Description	Min.	Typ.	Max.	Unit
V_{DD}	Supply voltage	1.71	—	3.6	V
I_{DDHS}	Supply current, High-speed mode (EN=1, PMODE=1)	—	—	200	μA
I_{DDLS}	Supply current, low-speed mode (EN=1, PMODE=0)	—	—	20	μA
V_{AIN}	Analog input voltage	V_{SS} – 0.3	—	V_{DD}	V
V_{AIO}	Analog input offset voltage	—	—	20	mV
V_H	Analog comparator hysteresis[1]				
	• CR0[HYSTCTR] = 00	—	5	—	mV
	• CR0[HYSTCTR] = 01	—	10	—	mV
	• CR0[HYSTCTR] = 10	—	20	—	mV
	• CR0[HYSTCTR] = 11	—	30	—	mV
V_{CMPOh}	Output high	V_{DD} – 0.5	—	—	V
V_{CMPOl}	Output low	—	—	0.5	V
t_{DHS}	Propagation delay, high-speed mode (EN=1, PMODE=1)	20	50	200	ns
t_{DLS}	Propagation delay, low-speed mode (EN=1, PMODE=0)	80	250	600	ns
	Analog comparator initialization delay[2]	—	—	40	μs
I_{DAC6b}	6-bit DAC current adder (enabled)	—	7	—	μA
INL	6-bit DAC integral non-linearity	–0.5	—	0.5	LSB[3]
DNL	6-bit DAC differential non-linearity	–0.3	—	0.3	LSB

1. Typical hysteresis is measured with input voltage range limited to 0.6 to V_{DD}–0.6 V.
2. Comparator initialization delay is defined as the time between software writes to change control inputs (Writes to CMP_DACCR[DACEN], CMP_DACCR[VRSEL], CMP_DACCR[VOSEL], CMP_MUXCR[PSEL], and CMP_MUXCR[MSEL]) and the comparator output settling to a stable level.
3. 1 LSB = $V_{reference}$/64

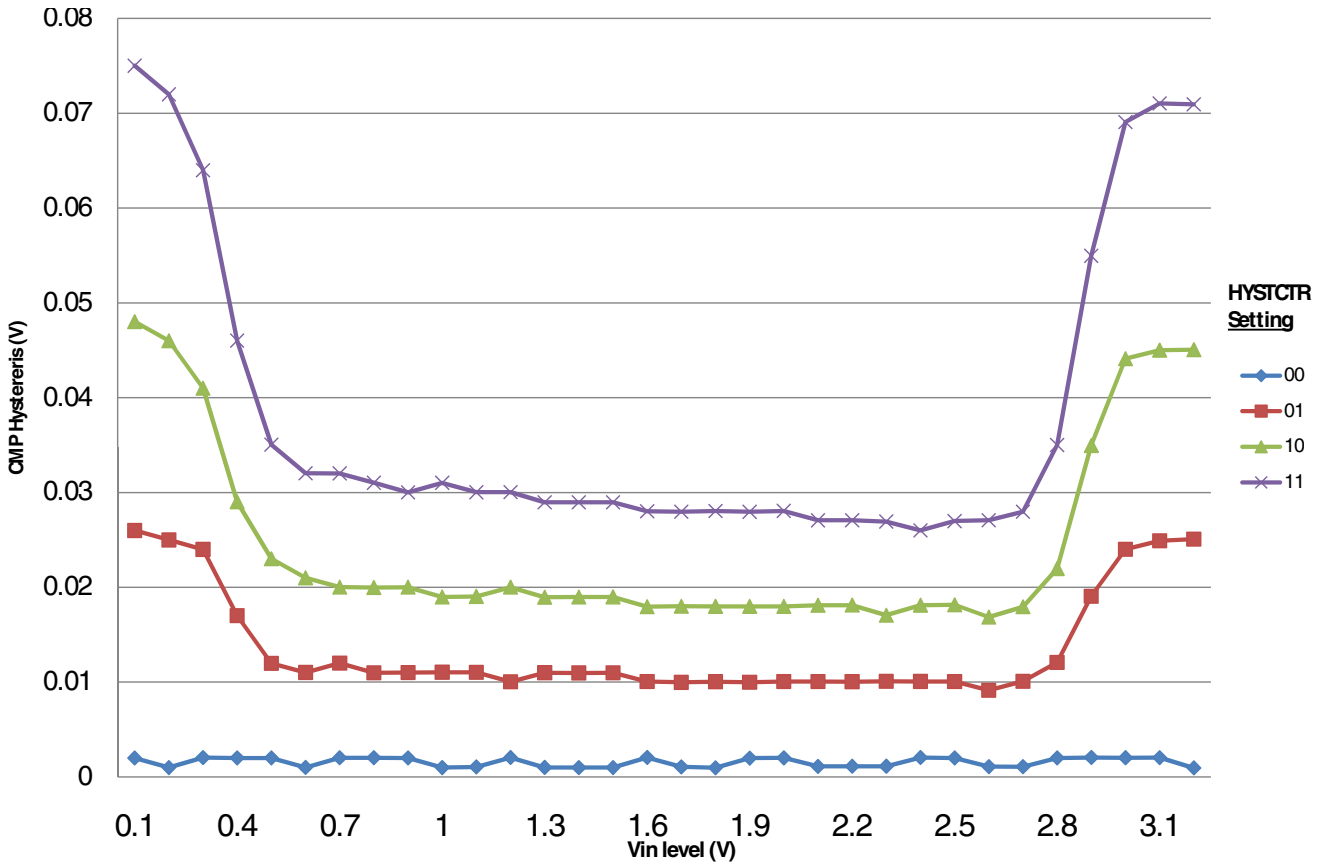

Figure 12. Typical hysteresis vs. Vin level (VDD = 3.3 V, PMODE = 0)

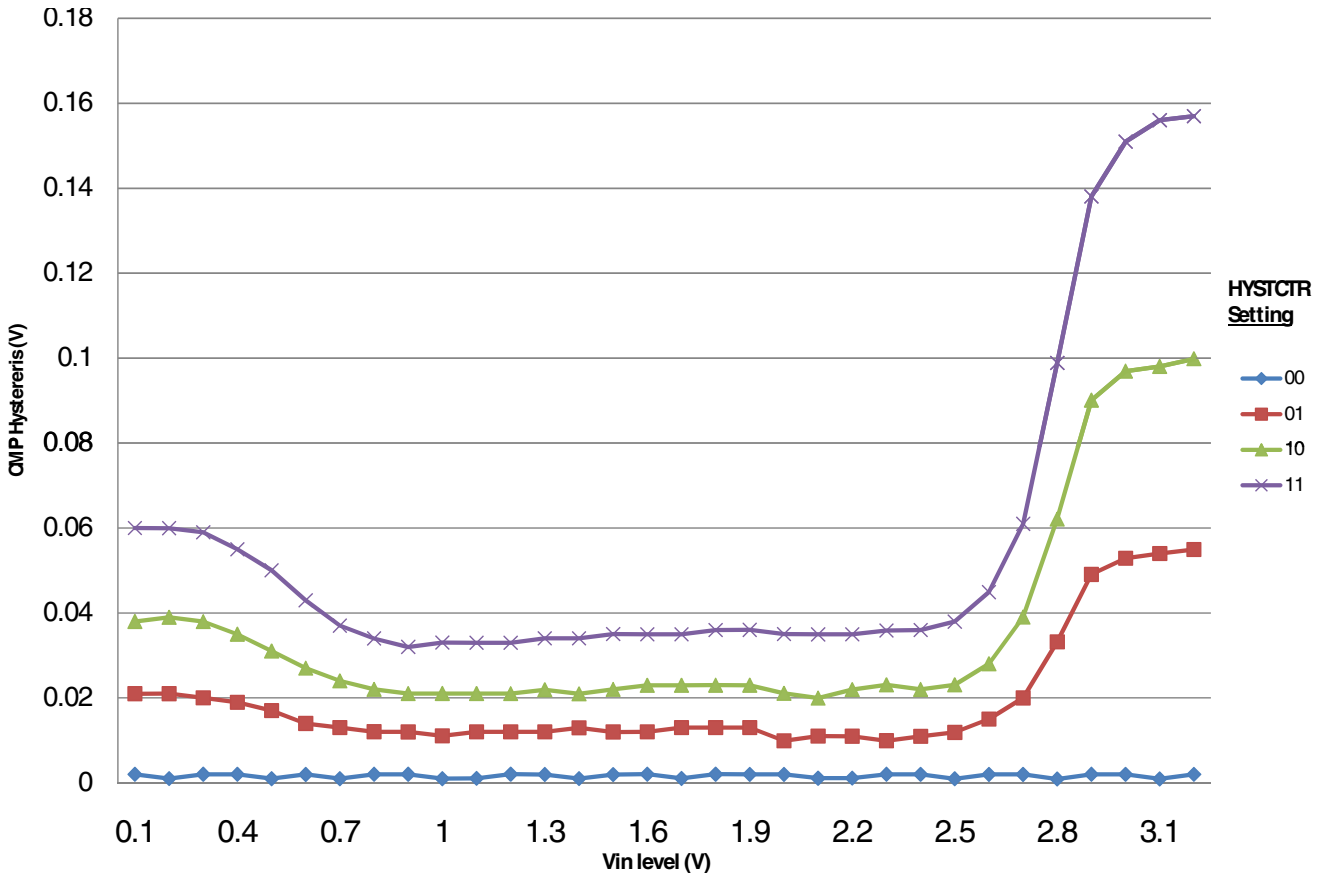

Figure 13. Typical hysteresis vs. Vin level (VDD = 3.3 V, PMODE = 1)

6.6.3 12-bit DAC electrical characteristics

6.6.3.1 12-bit DAC operating requirements

Table 27. 12-bit DAC operating requirements

Symbol	Desciption	Min.	Max.	Unit	Notes
V_{DDA}	Supply voltage	1.71	3.6	V	
V_{DACR}	Reference voltage	1.13	3.6	V	1
T_A	Temperature	Operating temperature range of the device		°C	
C_L	Output load capacitance	—	100	pF	2
I_L	Output load current	—	1	mA	

1. The DAC reference can be selected to be V_{DDA} or the voltage output of the VREF module (VREF_OUT)
2. A small load capacitance (47 pF) can improve the bandwidth performance of the DAC

6.6.3.2 12-bit DAC operating behaviors

Table 28. 12-bit DAC operating behaviors

Symbol	Description	Min.	Typ.	Max.	Unit	Notes
I_{DDA_DACLP}	Supply current — low-power mode	—	—	330	μA	
I_{DDA_DACHP}	Supply current — high-speed mode	—	—	1200	μA	
t_{DACLP}	Full-scale settling time (0x080 to 0xF7F) — low-power mode	—	100	200	μs	1
t_{DACHP}	Full-scale settling time (0x080 to 0xF7F) — high-power mode	—	15	30	μs	1
$t_{CCDACLP}$	Code-to-code settling time (0xBF8 to 0xC08) — low-power mode and high-speed mode	—	0.7	1	μs	1
$V_{dacoutl}$	DAC output voltage range low — high-speed mode, no load, DAC set to 0x000	—	—	100	mV	
$V_{dacouth}$	DAC output voltage range high — high-speed mode, no load, DAC set to 0xFFF	V_{DACR} −100	—	V_{DACR}	mV	
INL	Integral non-linearity error — high speed mode	—	—	±8	LSB	2
DNL	Differential non-linearity error — V_{DACR} > 2 V	—	—	±1	LSB	3
DNL	Differential non-linearity error — V_{DACR} = VREF_OUT	—	—	±1	LSB	4
V_{OFFSET}	Offset error	—	±0.4	±0.8	%FSR	5
E_G	Gain error	—	±0.1	±0.6	%FSR	5
PSRR	Power supply rejection ratio, V_{DDA} ≥ 2.4 V	60	—	90	dB	
T_{CO}	Temperature coefficient offset voltage	—	3.7	—	μV/C	6
T_{GE}	Temperature coefficient gain error	—	0.000421	—	%FSR/C	
Rop	Output resistance (load = 3 kΩ)	—	—	250	Ω	
SR	Slew rate -80h→ F7Fh→ 80h • High power (SP_{HP}) • Low power (SP_{LP})	 1.2 0.05	 1.7 0.12	 — —	V/μs	
CT	Channel to channel cross talk	—	—	-80	dB	
BW	3dB bandwidth • High power (SP_{HP}) • Low power (SP_{LP})	 550 40	 — —	 — —	kHz	

1. Settling within ±1 LSB
2. The INL is measured for 0 + 100 mV to V_{DACR} −100 mV
3. The DNL is measured for 0 + 100 mV to V_{DACR} −100 mV
4. The DNL is measured for 0 + 100 mV to V_{DACR} −100 mV with V_{DDA} > 2.4 V
5. Calculated by a best fit curve from V_{SS} + 100 mV to V_{DACR} − 100 mV
6. V_{DDA} = 3.0 V, reference select set for V_{DDA} (DACx_CO:DACRFS = 1), high power mode (DACx_C0:LPEN = 0), DAC set to 0x800, temperature range is across the full range of the device

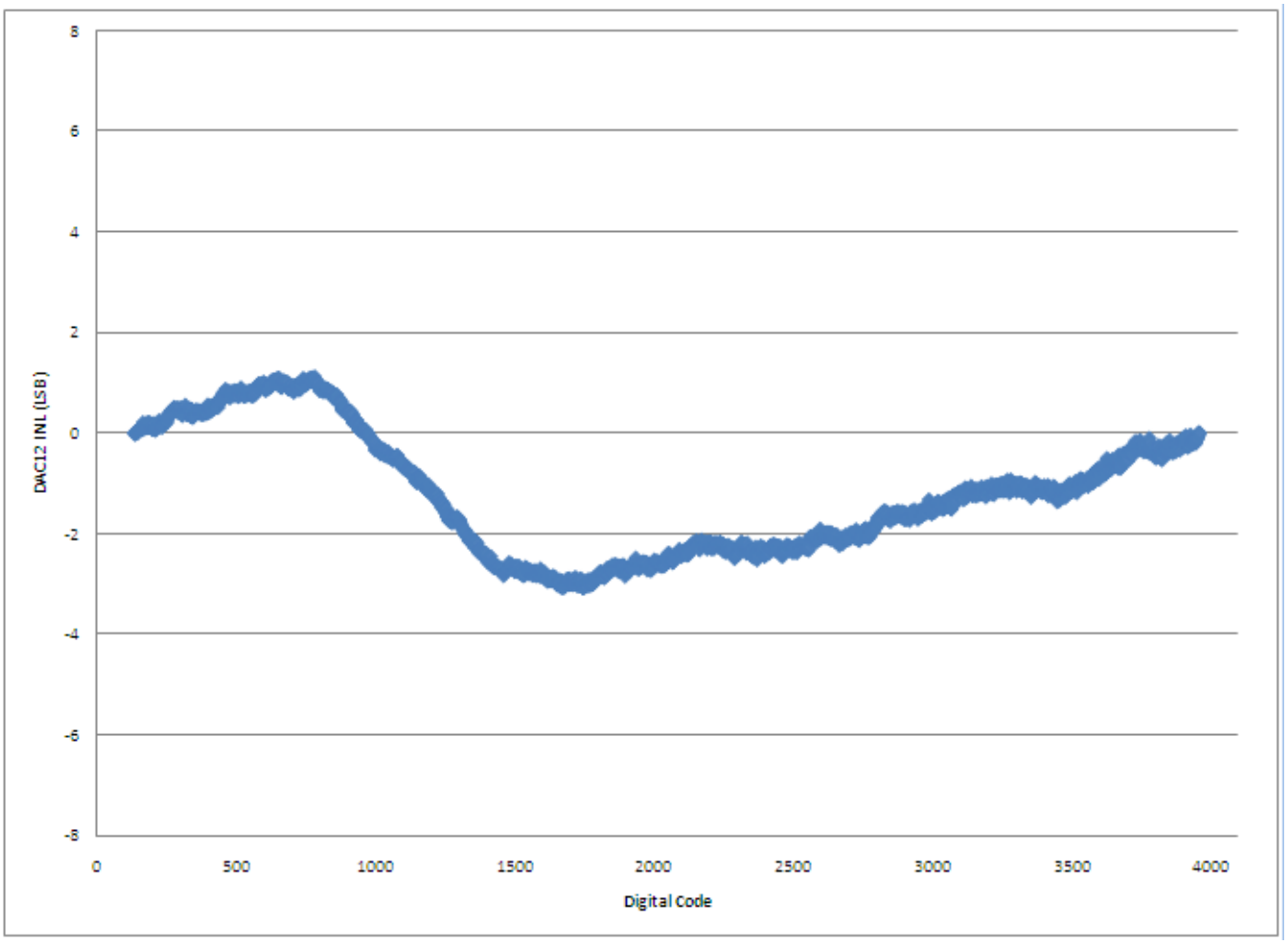

Figure 14. Typical INL error vs. digital code

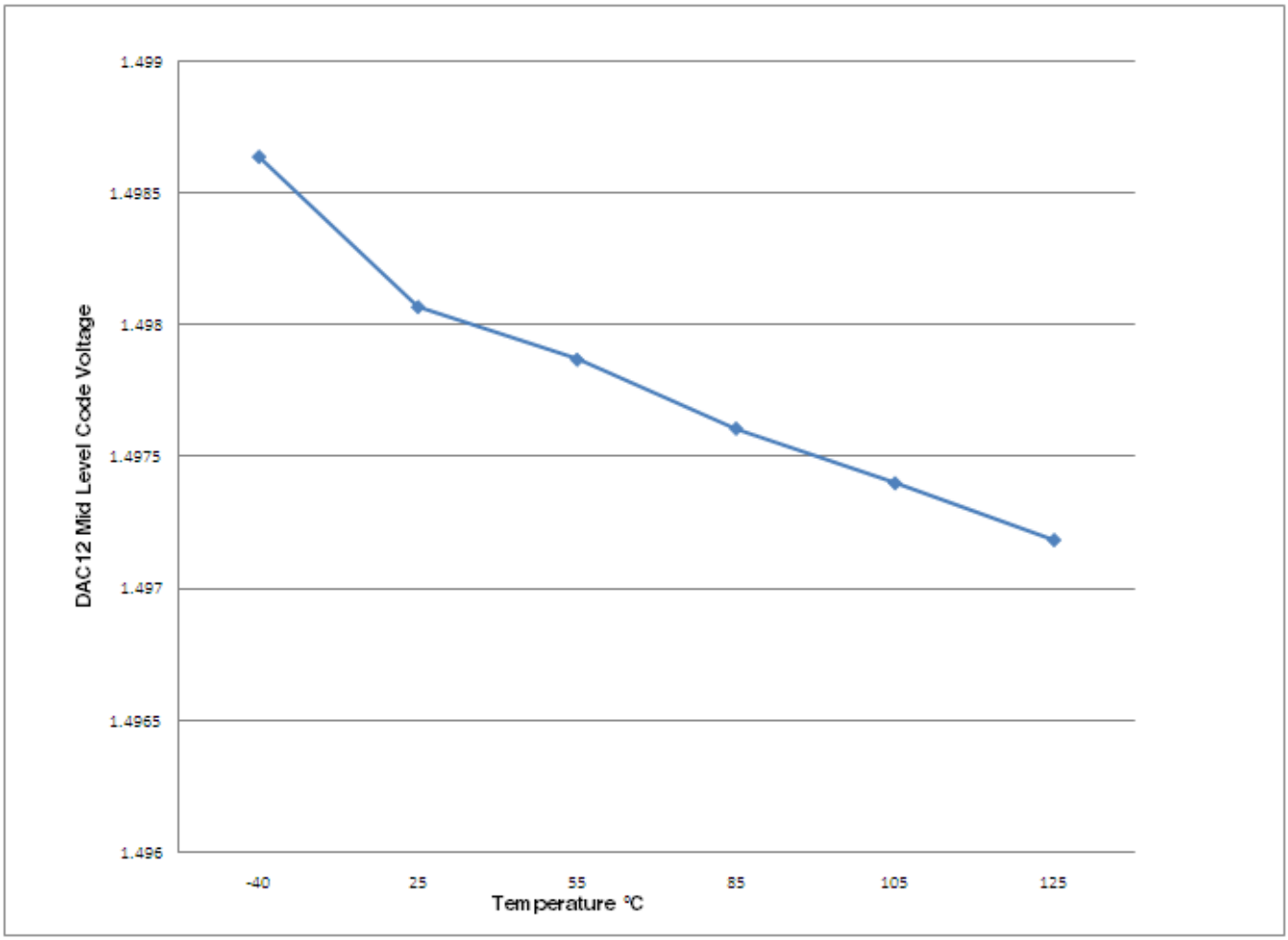

Figure 15. Offset at half scale vs. temperature

6.6.4 Voltage reference electrical specifications

Table 29. VREF full-range operating requirements

Symbol	Description	Min.	Max.	Unit	Notes
V_{DDA}	Supply voltage	1.71	3.6	V	
T_A	Temperature	Operating temperature range of the device		°C	
C_L	Output load capacitance	100		nF	1, 2

1. C_L must be connected to VREF_OUT if the VREF_OUT functionality is being used for either an internal or external reference.
2. The load capacitance should not exceed +/-25% of the nominal specified C_L value over the operating temperature range of the device.

Table 30. VREF full-range operating behaviors

Symbol	Description	Min.	Typ.	Max.	Unit	Notes
V_{out}	Voltage reference output with factory trim at nominal V_{DDA} and temperature=25C	1.1915	1.195	1.1977	V	1
V_{out}	Voltage reference output — factory trim	1.1584	—	1.2376	V	1
V_{out}	Voltage reference output — user trim	1.193	—	1.197	V	1
V_{step}	Voltage reference trim step	—	0.5	—	mV	1
V_{tdrift}	Temperature drift (Vmax -Vmin across the full temperature range)	—	—	80	mV	1
I_{bg}	Bandgap only current	—	—	80	μA	1
ΔV_{LOAD}	Load regulation • current = ± 1.0 mA	— —	 200	 —	μV	1, 2
T_{stup}	Buffer startup time	—	—	100	μs	
V_{vdrift}	Voltage drift (Vmax -Vmin across the full voltage range)	—	2	—	mV	1

1. See the chip's Reference Manual for the appropriate settings of the VREF Status and Control register.
2. Load regulation voltage is the difference between the VREF_OUT voltage with no load vs. voltage with defined load

Table 31. VREF limited-range operating requirements

Symbol	Description	Min.	Max.	Unit	Notes
T_A	Temperature	0	50	°C	

Table 32. VREF limited-range operating behaviors

Symbol	Description	Min.	Max.	Unit	Notes
V_{out}	Voltage reference output with factory trim	1.173	1.225	V	

6.7 Timers

See General switching specifications.

6.8 Communication interfaces

6.8.1 DSPI switching specifications (limited voltage range)

The DMA Serial Peripheral Interface (DSPI) provides a synchronous serial bus with master and slave operations. Many of the transfer attributes are programmable. The tables below provide DSPI timing characteristics for classic SPI timing modes. Refer to the DSPI chapter of the Reference Manual for information on the modified transfer formats used for communicating with slower peripheral devices.

Table 33. Master mode DSPI timing (limited voltage range)

Num	Description	Min.	Max.	Unit	Notes
	Operating voltage	2.7	3.6	V	
	Frequency of operation	—	25	MHz	
DS1	DSPI_SCK output cycle time	2 x t_{BUS}	—	ns	
DS2	DSPI_SCK output high/low time	(t_{SCK}/2) – 2	(t_{SCK}/2) + 2	ns	
DS3	DSPI_PCS*n* valid to DSPI_SCK delay	(t_{BUS} x 2) – 2	—	ns	1
DS4	DSPI_SCK to DSPI_PCS*n* invalid delay	(t_{BUS} x 2) – 2	—	ns	2
DS5	DSPI_SCK to DSPI_SOUT valid	—	8.5	ns	
DS6	DSPI_SCK to DSPI_SOUT invalid	–2	—	ns	
DS7	DSPI_SIN to DSPI_SCK input setup	15	—	ns	
DS8	DSPI_SCK to DSPI_SIN input hold	0	—	ns	

1. The delay is programmable in SPIx_CTARn[PSSCK] and SPIx_CTARn[CSSCK].
2. The delay is programmable in SPIx_CTARn[PASC] and SPIx_CTARn[ASC].

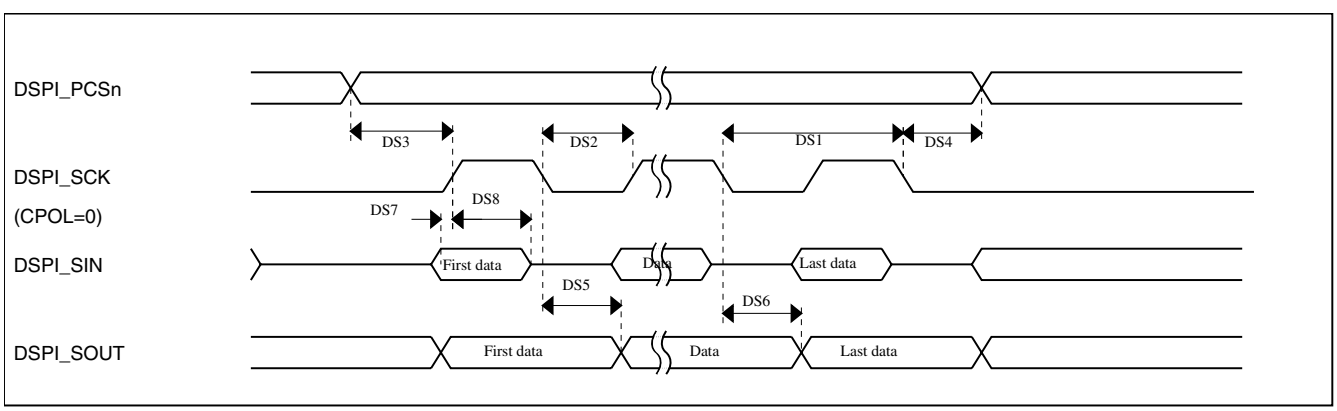

Figure 16. DSPI classic SPI timing — master mode

Table 34. Slave mode DSPI timing (limited voltage range)

Num	Description	Min.	Max.	Unit
	Operating voltage	2.7	3.6	V
	Frequency of operation		12.5	MHz
DS9	DSPI_SCK input cycle time	4 x t_{BUS}	—	ns

Table continues on the next page...

Table 34. Slave mode DSPI timing (limited voltage range) (continued)

Num	Description	Min.	Max.	Unit
DS10	DSPI_SCK input high/low time	$(t_{SCK}/2) - 2$	$(t_{SCK}/2) + 2$	ns
DS11	DSPI_SCK to DSPI_SOUT valid	—	10	ns
DS12	DSPI_SCK to DSPI_SOUT invalid	0	—	ns
DS13	DSPI_SIN to DSPI_SCK input setup	2	—	ns
DS14	DSPI_SCK to DSPI_SIN input hold	7	—	ns
DS15	$\overline{\text{DSPI_SS}}$ active to DSPI_SOUT driven	—	14	ns
DS16	$\overline{\text{DSPI_SS}}$ inactive to DSPI_SOUT not driven	—	14	ns

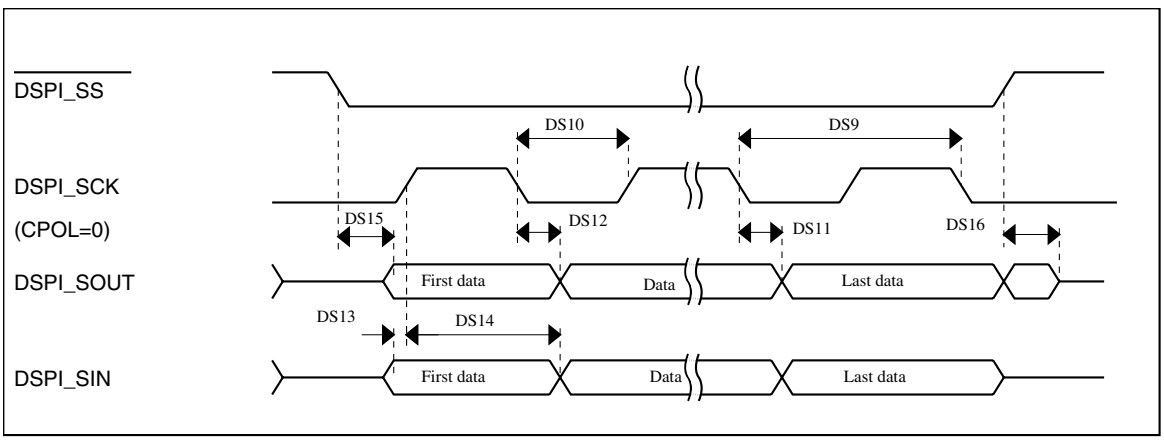

Figure 17. DSPI classic SPI timing — slave mode

6.8.2 DSPI switching specifications (full voltage range)

The DMA Serial Peripheral Interface (DSPI) provides a synchronous serial bus with master and slave operations. Many of the transfer attributes are programmable. The tables below provides DSPI timing characteristics for classic SPI timing modes. Refer to the DSPI chapter of the Reference Manual for information on the modified transfer formats used for communicating with slower peripheral devices.

Table 35. Master mode DSPI timing (full voltage range)

Num	Description	Min.	Max.	Unit	Notes
	Operating voltage	1.71	3.6	V	1
	Frequency of operation	—	12.5	MHz	
DS1	DSPI_SCK output cycle time	$4 \times t_{BUS}$	—	ns	
DS2	DSPI_SCK output high/low time	$(t_{SCK}/2) - 4$	$(t_{SCK/2)} + 4$	ns	
DS3	DSPI_PCS*n* valid to DSPI_SCK delay	$(t_{BUS} \times 2) - 4$	—	ns	2

Table continues on the next page...

Table 35. Master mode DSPI timing (full voltage range) (continued)

Num	Description	Min.	Max.	Unit	Notes
DS4	DSPI_SCK to DSPI_PCS*n* invalid delay	(t_{BUS} x 2) – 4	—	ns	3
DS5	DSPI_SCK to DSPI_SOUT valid	—	10	ns	
DS6	DSPI_SCK to DSPI_SOUT invalid	-4.5	—	ns	
DS7	DSPI_SIN to DSPI_SCK input setup	20.5	—	ns	
DS8	DSPI_SCK to DSPI_SIN input hold	0	—	ns	

1. The DSPI module can operate across the entire operating voltage for the processor, but to run across the full voltage range the maximum frequency of operation is reduced.
2. The delay is programmable in SPIx_CTARn[PSSCK] and SPIx_CTARn[CSSCK].
3. The delay is programmable in SPIx_CTARn[PASC] and SPIx_CTARn[ASC].

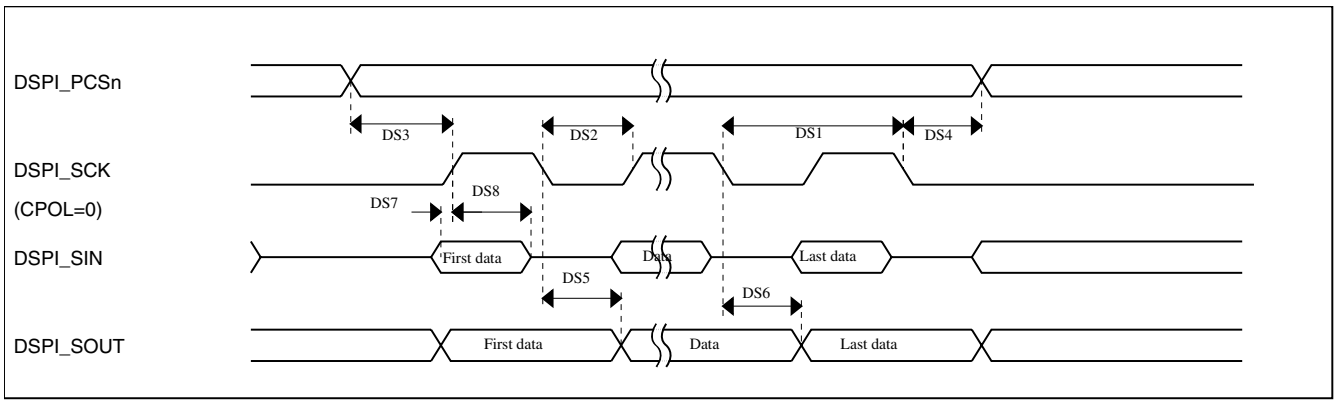

Figure 18. DSPI classic SPI timing — master mode

Table 36. Slave mode DSPI timing (full voltage range)

Num	Description	Min.	Max.	Unit
	Operating voltage	1.71	3.6	V
	Frequency of operation	—	6.25	MHz
DS9	DSPI_SCK input cycle time	8 x t_{BUS}	—	ns
DS10	DSPI_SCK input high/low time	(t_{SCK}/2) - 4	($t_{SCK/2)}$ + 4	ns
DS11	DSPI_SCK to DSPI_SOUT valid	—	20	ns
DS12	DSPI_SCK to DSPI_SOUT invalid	0	—	ns
DS13	DSPI_SIN to DSPI_SCK input setup	2	—	ns
DS14	DSPI_SCK to DSPI_SIN input hold	7	—	ns
DS15	$\overline{\text{DSPI_SS}}$ active to DSPI_SOUT driven	—	19	ns
DS16	$\overline{\text{DSPI_SS}}$ inactive to DSPI_SOUT not driven	—	19	ns

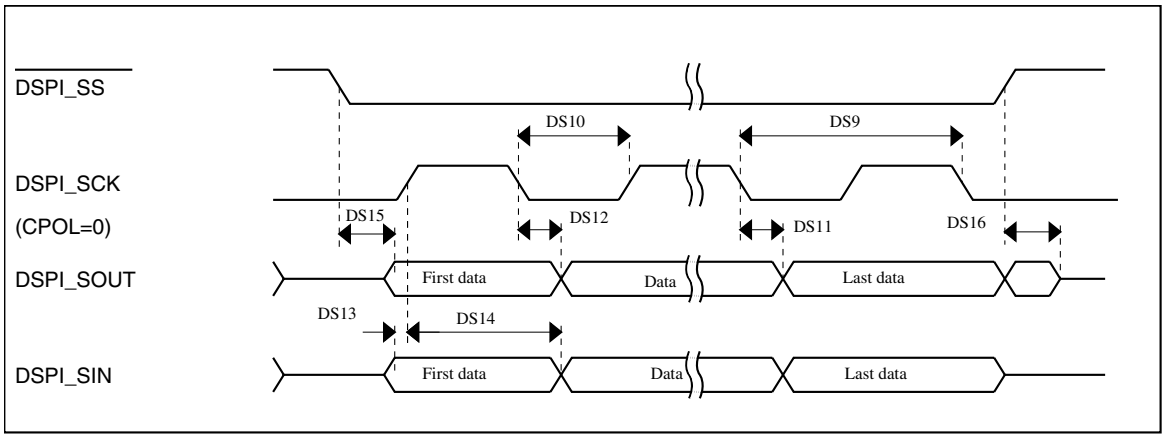

Figure 19. DSPI classic SPI timing — slave mode

6.8.3 I²C switching specifications

See General switching specifications.

6.8.4 UART switching specifications

See General switching specifications.

6.8.5 Normal Run, Wait and Stop mode performance over the full operating voltage range

This section provides the operating performance over the full operating voltage for the device in Normal Run, Wait and Stop modes.

Table 37. I2S/SAI master mode timing

Num.	Characteristic	Min.	Max.	Unit
	Operating voltage	1.71	3.6	V
S1	I2S_MCLK cycle time	40	—	ns
S2	I2S_MCLK (as an input) pulse width high/low	45%	55%	MCLK period
S3	I2S_TX_BCLK/I2S_RX_BCLK cycle time (output)	80	—	ns
S4	I2S_TX_BCLK/I2S_RX_BCLK pulse width high/low	45%	55%	BCLK period
S5	I2S_TX_BCLK/I2S_RX_BCLK to I2S_TX_FS/ I2S_RX_FS output valid	—	15	ns
S6	I2S_TX_BCLK/I2S_RX_BCLK to I2S_TX_FS/ I2S_RX_FS output invalid	0	—	ns
S7	I2S_TX_BCLK to I2S_TXD valid	—	15	ns

Table continues on the next page...

Table 37. I2S/SAI master mode timing (continued)

Num.	Characteristic	Min.	Max.	Unit
S8	I2S_TX_BCLK to I2S_TXD invalid	0	—	ns
S9	I2S_RXD/I2S_RX_FS input setup before I2S_RX_BCLK	25	—	ns
S10	I2S_RXD/I2S_RX_FS input hold after I2S_RX_BCLK	0	—	ns

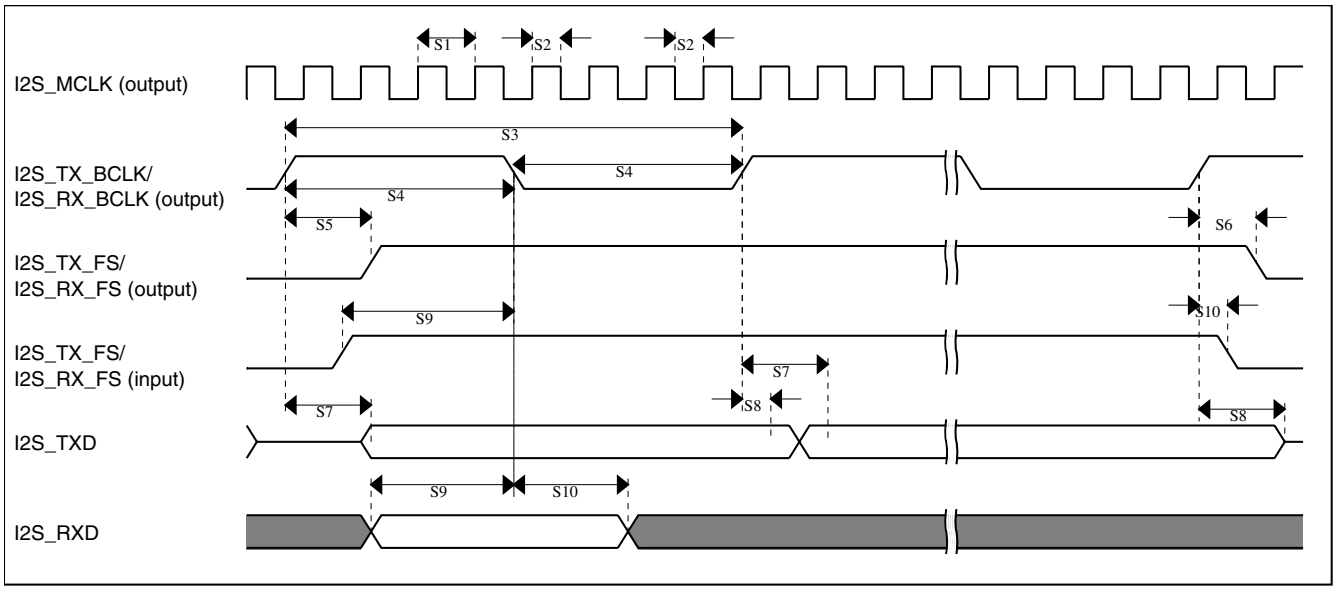

Figure 20. I2S/SAI timing — master modes

Table 38. I2S/SAI slave mode timing

Num.	Characteristic	Min.	Max.	Unit
	Operating voltage	1.71	3.6	V
S11	I2S_TX_BCLK/I2S_RX_BCLK cycle time (input)	80	—	ns
S12	I2S_TX_BCLK/I2S_RX_BCLK pulse width high/low (input)	45%	55%	MCLK period
S13	I2S_TX_FS/I2S_RX_FS input setup before I2S_TX_BCLK/I2S_RX_BCLK	10	—	ns
S14	I2S_TX_FS/I2S_RX_FS input hold after I2S_TX_BCLK/I2S_RX_BCLK	2	—	ns
S15	I2S_TX_BCLK to I2S_TXD/I2S_TX_FS output valid	—	29	ns
S16	I2S_TX_BCLK to I2S_TXD/I2S_TX_FS output invalid	0	—	ns
S17	I2S_RXD setup before I2S_RX_BCLK	10	—	ns
S18	I2S_RXD hold after I2S_RX_BCLK	2	—	ns
S19	I2S_TX_FS input assertion to I2S_TXD output valid[1]	—	21	ns

1. Applies to first bit in each frame and only if the TCR4[FSE] bit is clear

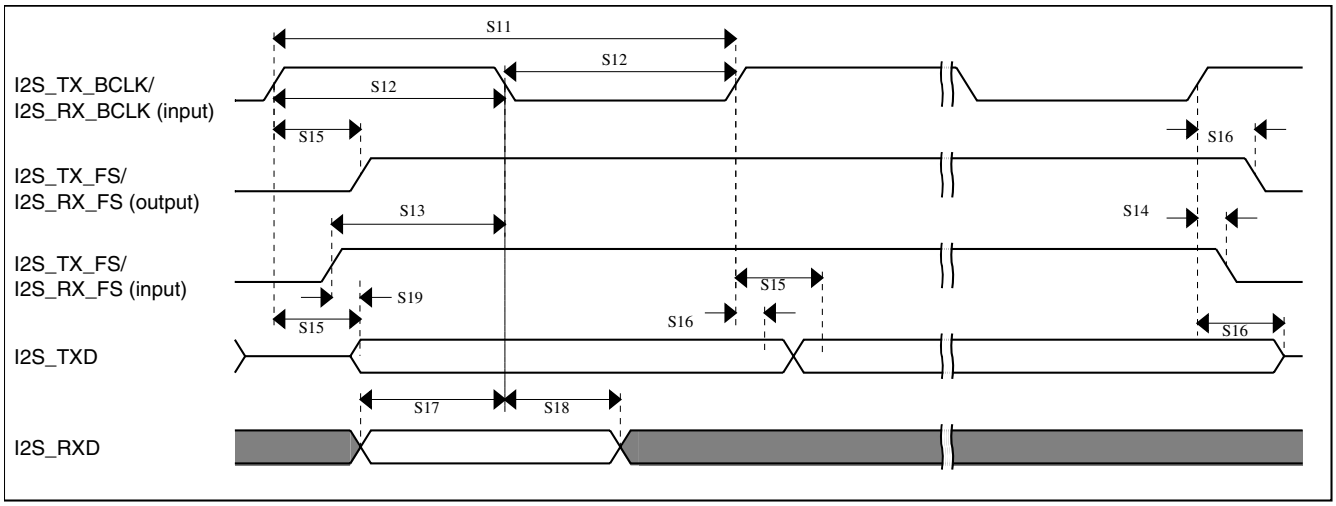

Figure 21. I2S/SAI timing — slave modes

6.8.6 VLPR, VLPW, and VLPS mode performance over the full operating voltage range

This section provides the operating performance over the full operating voltage for the device in VLPR, VLPW, and VLPS modes.

Table 39. I2S/SAI master mode timing in VLPR, VLPW, and VLPS modes (full voltage range)

Num.	Characteristic	Min.	Max.	Unit
	Operating voltage	1.71	3.6	V
S1	I2S_MCLK cycle time	62.5	—	ns
S2	I2S_MCLK pulse width high/low	45%	55%	MCLK period
S3	I2S_TX_BCLK/I2S_RX_BCLK cycle time (output)	250	—	ns
S4	I2S_TX_BCLK/I2S_RX_BCLK pulse width high/low	45%	55%	BCLK period
S5	I2S_TX_BCLK/I2S_RX_BCLK to I2S_TX_FS/ I2S_RX_FS output valid	—	45	ns
S6	I2S_TX_BCLK/I2S_RX_BCLK to I2S_TX_FS/ I2S_RX_FS output invalid	0	—	ns
S7	I2S_TX_BCLK to I2S_TXD valid	—	45	ns
S8	I2S_TX_BCLK to I2S_TXD invalid	0	—	ns
S9	I2S_RXD/I2S_RX_FS input setup before I2S_RX_BCLK	75	—	ns
S10	I2S_RXD/I2S_RX_FS input hold after I2S_RX_BCLK	0	—	ns

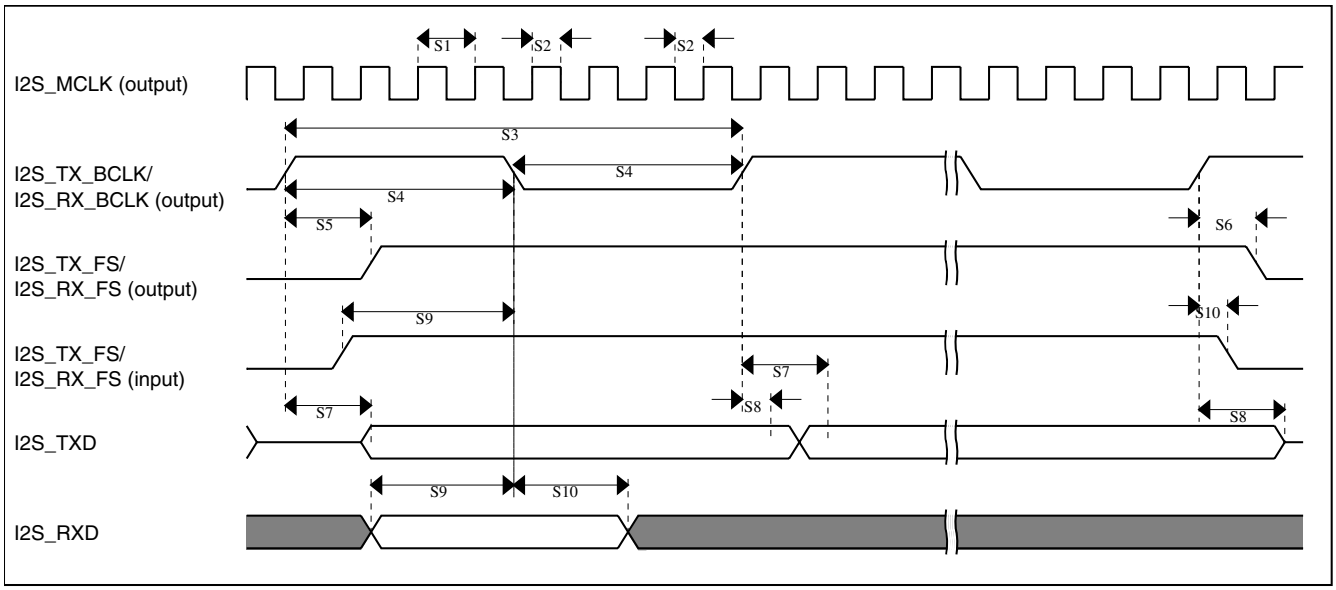

Figure 22. I2S/SAI timing — master modes

Table 40. I2S/SAI slave mode timing in VLPR, VLPW, and VLPS modes (full voltage range)

Num.	Characteristic	Min.	Max.	Unit
	Operating voltage	1.71	3.6	V
S11	I2S_TX_BCLK/I2S_RX_BCLK cycle time (input)	250	—	ns
S12	I2S_TX_BCLK/I2S_RX_BCLK pulse width high/low (input)	45%	55%	MCLK period
S13	I2S_TX_FS/I2S_RX_FS input setup before I2S_TX_BCLK/I2S_RX_BCLK	30	—	ns
S14	I2S_TX_FS/I2S_RX_FS input hold after I2S_TX_BCLK/I2S_RX_BCLK	2	—	ns
S15	I2S_TX_BCLK to I2S_TXD/I2S_TX_FS output valid	—	87	ns
S16	I2S_TX_BCLK to I2S_TXD/I2S_TX_FS output invalid	0	—	ns
S17	I2S_RXD setup before I2S_RX_BCLK	30	—	ns
S18	I2S_RXD hold after I2S_RX_BCLK	2	—	ns
S19	I2S_TX_FS input assertion to I2S_TXD output valid[1]	—	72	ns

1. Applies to first bit in each frame and only if the TCR4[FSE] bit is clear

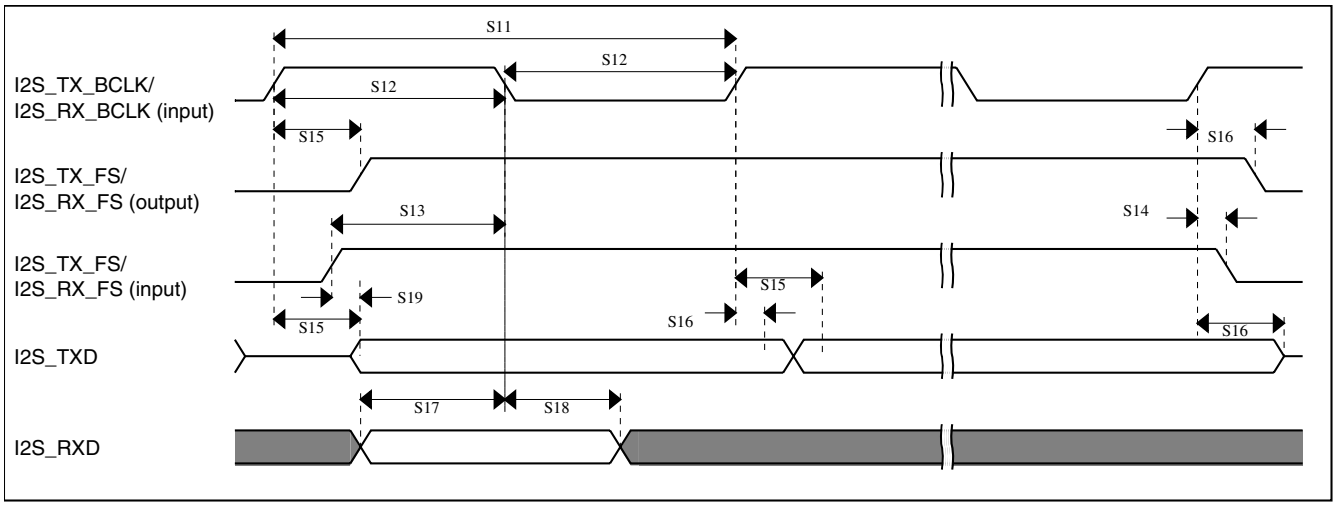

Figure 23. I2S/SAI timing — slave modes

7 Dimensions

7.1 Obtaining package dimensions

Package dimensions are provided in package drawings.

To find a package drawing, go to freescale.com and perform a keyword search for the drawing's document number:

If you want the drawing for this package	Then use this document number
80-pin LQFP	98ASS23174W

8 Pinout

8.1 K12 Signal Multiplexing and Pin Assignments

The following table shows the signals available on each pin and the locations of these pins on the devices supported by this document. The Port Control Module is responsible for selecting which ALT functionality is available on each pin.

NOTE

- The analog input signals ADC0_SE10, ADC0_SE11, ADC0_DP1, and ADC0_DM1 are available only for K11,

K12, K21, and K22 devices and are not present on K10 and K20 devices.

- The TRACE signals on PTE0, PTE1, PTE2, PTE3, and PTE4 are available only for K11, K12, K21, and K22 devices and are not present on K10 and K20 devices.
- If the VBAT pin is not used, the VBAT pin should be left floating. Do not connect VBAT pin to VSS.
- The FTM_CLKIN signals on PTB16 and PTB17 are available only for K11, K12, K21, and K22 devices and is not present on K10 and K20 devices. For K22D devices this signal is on ALT4, and for K22F devices, this signal is on ALT7.
- The FTM0_CH2 signal on PTC5/LLWU_P9 is available only for K11, K12, K21, and K22 devices and is not present on K10 and K20 devices.
- The I2C0_SCL signal on PTD2/LLWU_P13 and I2C0_SDA signal on PTD3 are available only for K11, K12, K21, and K22 devices and are not present on K10 and K20 devices.

80 LQFP	Default	ALT0	ALT1	ALT2	ALT3	ALT4	ALT5	ALT6	ALT7	EzPort
1	ADC0_SE10	ADC0_SE10	PTE0	SPI1_PCS1	UART1_TX		TRACE_CLKOUT	I2C1_SDA	RTC_CLKOUT	
2	ADC0_SE11	ADC0_SE11	PTE1/ LLWU_P0	SPI1_SOUT	UART1_RX		TRACE_D3	I2C1_SCL	SPI1_SIN	
3	ADC0_DP1	ADC0_DP1	PTE2/ LLWU_P1	SPI1_SCK	UART1_CTS_b		TRACE_D2			
4	ADC0_DM1	ADC0_DM1	PTE3	SPI1_SIN	UART1_RTS_b		TRACE_D1		SPI1_SOUT	
5	DISABLED		PTE4/ LLWU_P2	SPI1_PCS0	UART3_TX		TRACE_D0			
6	DISABLED		PTE5	SPI1_PCS2	UART3_RX					
7	VDD	VDD								
8	VSS	VSS								
9	ADC0_SE4a	ADC0_SE4a	PTE16	SPI0_PCS0	UART2_TX	FTM_CLKIN0		FTM0_FLT3		
10	ADC0_SE5a	ADC0_SE5a	PTE17	SPI0_SCK	UART2_RX	FTM_CLKIN1		LPTMR0_ALT3		
11	ADC0_SE6a	ADC0_SE6a	PTE18	SPI0_SOUT	UART2_CTS_b	I2C0_SDA				
12	ADC0_SE7a	ADC0_SE7a	PTE19	SPI0_SIN	UART2_RTS_b	I2C0_SCL				
13	ADC0_DP0	ADC0_DP0								
14	ADC0_DM0	ADC0_DM0								
15	ADC0_DP3	ADC0_DP3								
16	ADC0_DM3	ADC0_DM3								
17	VDDA	VDDA								
18	VREFH	VREFH								
19	VREFL	VREFL								

80 LQFP	Default	ALT0	ALT1	ALT2	ALT3	ALT4	ALT5	ALT6	ALT7	EzPort
20	VSSA	VSSA								
21	VREF_OUT/ CMP1_IN5/ CMP0_IN5	VREF_OUT/ CMP1_IN5/ CMP0_IN5								
22	DAC0_OUT/ CMP1_IN3/ ADC0_SE23	DAC0_OUT/ CMP1_IN3/ ADC0_SE23								
23	XTAL32	XTAL32								
24	EXTAL32	EXTAL32								
25	VBAT	VBAT								
26	JTAG_TCLK/ SWD_CLK/ EZP_CLK		PTA0	UART0_CTS_b/ UART0_COL_b	FTM0_CH5				JTAG_TCLK/ SWD_CLK	EZP_CLK
27	JTAG_TDI/ EZP_DI		PTA1	UART0_RX	FTM0_CH6				JTAG_TDI	EZP_DI
28	JTAG_TDO/ TRACE_SWO/ EZP_DO		PTA2	UART0_TX	FTM0_CH7				JTAG_TDO/ TRACE_SWO	EZP_DO
29	JTAG_TMS/ SWD_DIO		PTA3	UART0_RTS_b	FTM0_CH0				JTAG_TMS/ SWD_DIO	
30	NMI_b/ EZP_CS_b		PTA4/ LLWU_P3		FTM0_CH1				NMI_b	EZP_CS_b
31	DISABLED		PTA5		FTM0_CH2			I2S0_TX_BCLK	JTAG_TRST_b	
32	DISABLED		PTA12		FTM1_CH0			I2S0_TXD0	FTM1_QD_PHA	
33	DISABLED		PTA13/ LLWU_P4		FTM1_CH1			I2S0_TX_FS	FTM1_QD_PHB	
34	DISABLED		PTA14	SPI0_PCS0	UART0_TX			I2S0_RX_BCLK	I2S0_TXD1	
35	DISABLED		PTA15	SPI0_SCK	UART0_RX			I2S0_RXD0		
36	DISABLED		PTA16	SPI0_SOUT	UART0_CTS_b/ UART0_COL_b			I2S0_RX_FS	I2S0_RXD1	
37	DISABLED		PTA17	SPI0_SIN	UART0_RTS_b			I2S0_MCLK		
38	VDD	VDD								
39	VSS	VSS								
40	EXTAL0	EXTAL0	PTA18		FTM0_FLT2	FTM_CLKIN0				
41	XTAL0	XTAL0	PTA19		FTM1_FLT0	FTM_CLKIN1		LPTMR0_ALT1		
42	RESET_b	RESET_b								
43	ADC0_SE8	ADC0_SE8	PTB0/ LLWU_P5	I2C0_SCL	FTM1_CH0			FTM1_QD_PHA		
44	ADC0_SE9	ADC0_SE9	PTB1	I2C0_SDA	FTM1_CH1			FTM1_QD_PHB		
45	ADC0_SE12	ADC0_SE12	PTB2	I2C0_SCL	UART0_RTS_b			FTM0_FLT3		
46	ADC0_SE13	ADC0_SE13	PTB3	I2C0_SDA	UART0_CTS_b/ UART0_COL_b			FTM0_FLT0		
47	DISABLED		PTB10	SPI1_PCS0	UART3_RX			FTM0_FLT1		
48	DISABLED		PTB11	SPI1_SCK	UART3_TX			FTM0_FLT2		
49	DISABLED		PTB12	UART3_RTS_b	FTM1_CH0	FTM0_CH4		FTM1_QD_PHA		

80 LQFP	Default	ALT0	ALT1	ALT2	ALT3	ALT4	ALT5	ALT6	ALT7	EzPort
50	DISABLED		PTB13	UART3_CTS_b	FTM1_CH1	FTM0_CH5		FTM1_QD_PHB		
51	DISABLED		PTB16	SPI1_SOUT	UART0_RX			EWM_IN	FTM_CLKIN0	
52	DISABLED		PTB17	SPI1_SIN	UART0_TX			EWM_OUT_b	FTM_CLKIN1	
53	DISABLED		PTB18		FTM2_CH0	I2S0_TX_BCLK				
54	DISABLED		PTB19		FTM2_CH1	I2S0_TX_FS				
55	ADC0_SE14	ADC0_SE14	PTC0	SPI0_PCS4	PDB0_EXTRG			I2S0_TXD1		
56	ADC0_SE15	ADC0_SE15	PTC1/ LLWU_P6	SPI0_PCS3	UART1_RTS_b	FTM0_CH0		I2S0_TXD0		
57	ADC0_SE4b/ CMP1_IN0	ADC0_SE4b/ CMP1_IN0	PTC2	SPI0_PCS2	UART1_CTS_b	FTM0_CH1		I2S0_TX_FS		
58	CMP1_IN1	CMP1_IN1	PTC3/ LLWU_P7	SPI0_PCS1	UART1_RX	FTM0_CH2	CLKOUT	I2S0_TX_BCLK		
59	VSS	VSS								
60	VDD	VDD								
61	DISABLED		PTC4/ LLWU_P8	SPI0_PCS0	UART1_TX	FTM0_CH3		CMP1_OUT		
62	DISABLED		PTC5/ LLWU_P9	SPI0_SCK	LPTMR0_ALT2	I2S0_RXD0		CMP0_OUT	FTM0_CH2	
63	CMP0_IN0	CMP0_IN0	PTC6/ LLWU_P10	SPI0_SOUT	PDB0_EXTRG	I2S0_RX_BCLK		I2S0_MCLK		
64	CMP0_IN1	CMP0_IN1	PTC7	SPI0_SIN		I2S0_RX_FS				
65	CMP0_IN2	CMP0_IN2	PTC8			I2S0_MCLK				
66	CMP0_IN3	CMP0_IN3	PTC9			I2S0_RX_BCLK		FTM2_FLT0		
67	DISABLED		PTC10	I2C1_SCL		I2S0_RX_FS				
68	DISABLED		PTC11/ LLWU_P11	I2C1_SDA		I2S0_RXD1				
69	DISABLED		PTC12							
70	DISABLED		PTC13							
71	DISABLED		PTC16		UART3_RX					
72	DISABLED		PTC17		UART3_TX					
73	DISABLED		PTD0/ LLWU_P12	SPI0_PCS0	UART2_RTS_b					
74	ADC0_SE5b	ADC0_SE5b	PTD1	SPI0_SCK	UART2_CTS_b					
75	DISABLED		PTD2/ LLWU_P13	SPI0_SOUT	UART2_RX	I2C0_SCL				
76	DISABLED		PTD3	SPI0_SIN	UART2_TX	I2C0_SDA				
77	ADC0_SE21	ADC0_SE21	PTD4/ LLWU_P14	SPI0_PCS1	UART0_RTS_b	FTM0_CH4		EWM_IN		
78	ADC0_SE6b	ADC0_SE6b	PTD5	SPI0_PCS2	UART0_CTS_b/ UART0_COL_b	FTM0_CH5		EWM_OUT_b		
79	ADC0_SE7b	ADC0_SE7b	PTD6/ LLWU_P15	SPI0_PCS3	UART0_RX	FTM0_CH6		FTM0_FLT0		
80	ADC0_SE22	ADC0_SE22	PTD7	CMT_IRO	UART0_TX	FTM0_CH7		FTM0_FLT1		

8.2 K12 Pinouts

The below figure shows the pinout diagram for the devices supported by this document. Many signals may be multiplexed onto a single pin. To determine what signals can be used on which pin, see the previous section.

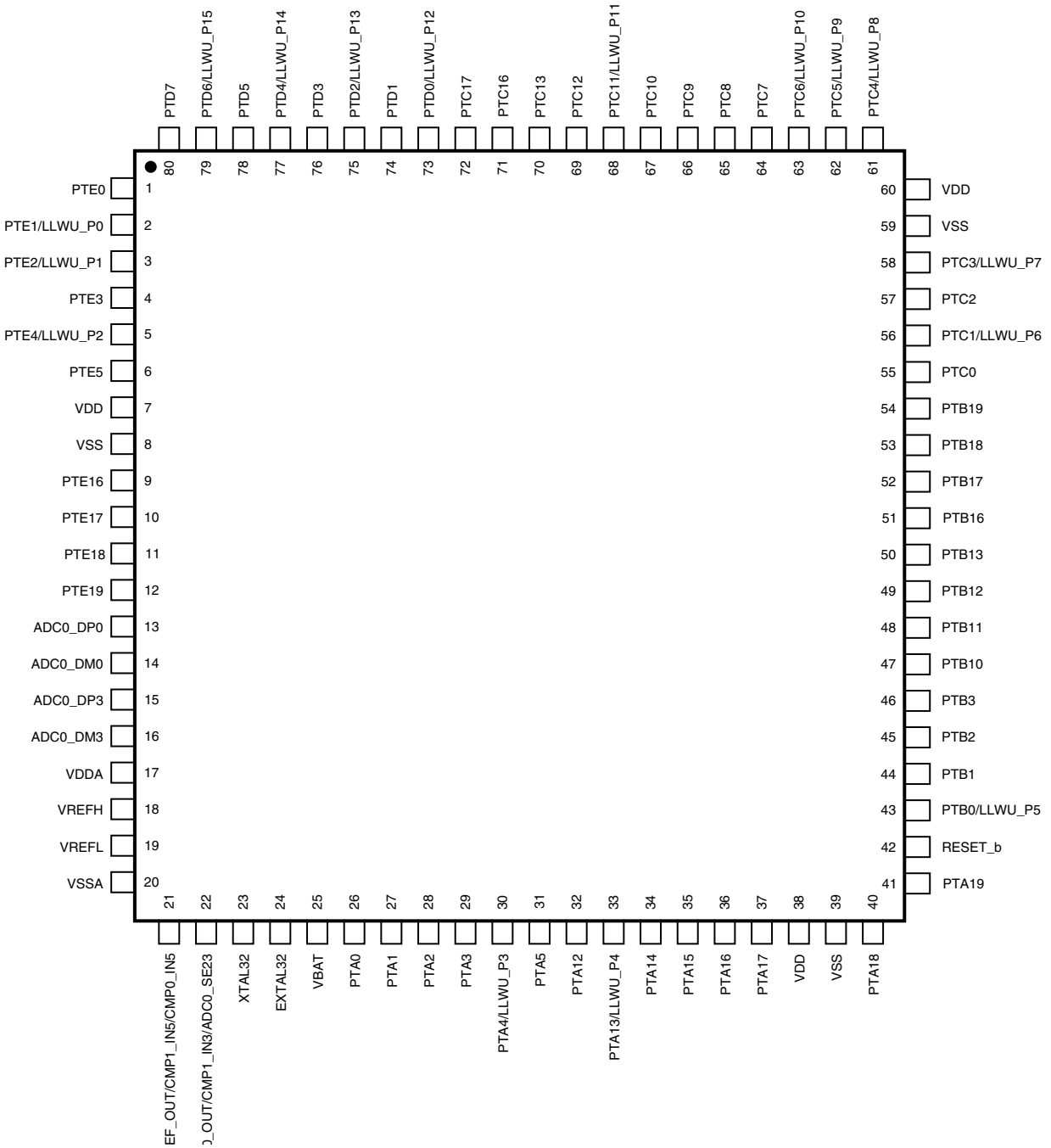

Figure 24. K12 80 LQFP Pinout Diagram

9 Revision History

The following table provides a revision history for this document.

Table 41. Revision History

Rev. No.	Date	Substantial Changes
1	6/2012	Alpha customer release.
1.1	6/2012	In Table 6, "Power consumption operating behaviors", changed the units of I_{DD_VLLS2}, I_{DD_VLLS1}, I_{DD_VLLS0}, and I_{DD_VBAT} from nA to µA.
2	7/2012	• Updated section "Power consumption operating behaviors". • Updated section "Flash timing specifications — program and erase". • Updated section "Flash timing specifications — commands". • Removed the 32K ratio from "Write endurance" in section "Reliability specifications". • Updated IDDstby maximum value in section "VREG electrical specifications". • Added the charts in section "Diagram: Typical IDD_RUN operating behavior".
3	8/2012	• Updated section "Power consumption operating behaviors". • Updated section "EMC radiated emissions operating behaviors". • Updated section "MCG specifications". • Added applicable notes in section "Signal Multiplexing and Pin Assignments".
4	12/2012	• Updated section "Power consumption operating behaviors" • Updated section "MCG specifications" • Updated section "16-bit ADC operating conditions"
4.1	08/2013	• Added section "Small package marking" • To section "MCG Specifications", added row for "Total deviation of trimmed average DCO output frequency over fixed voltage and temperature range of 0–70°C"

How to Reach Us:

Home Page:
freescale.com

Web Support:
freescale.com/support

Information in this document is provided solely to enable system and software implementers to use Freescale products. There are no express or implied copyright licenses granted hereunder to design or fabricate any integrated circuits based on the information in this document.

Freescale reserves the right to make changes without further notice to any products herein. Freescale makes no warranty, representation, or guarantee regarding the suitability of its products for any particular purpose, nor does Freescale assume any liability arising out of the application or use of any product or circuit, and specifically disclaims any and all liability, including without limitation consequential or incidental damages. “Typical” parameters that may be provided in Freescale data sheets and/or specifications can and do vary in different applications, and actual performance may vary over time. All operating parameters, including “typicals,” must be validated for each customer application by customer’s technical experts. Freescale does not convey any license under its patent rights nor the rights of others. Freescale sells products pursuant to standard terms and conditions of sale, which can be found at the following address: freescale.com/SalesTermsandConditions.

Freescale, the Freescale logo, Energy Efficient Solutions logo, and Kinetis are trademarks of Freescale Semiconductor, Inc., Reg. U.S. Pat. & Tm. Off. All other product or service names are the property of their respective owners. ARM and Cortex are the registered trademarks of ARM Limited.
© 2012-2013 Freescale Semiconductor, Inc.

Document Number: K12P80M50SF4
Rev. 4.1
08/2013