MCU Cards

for BIGAVR2™ development system

Manual

All Mikroelektronika's development systems feature a large number of peripheral modules expanding microcontroller's range of application and making the process of program testing easier. In addition to these modules, it is also possible to use numerous additional modules linked to the development system through the I/O port connectors. Some of these additional modules can operate as stand-alone devices without being connected to the microcontroller.

Additional Board

MikroElektronika

SOFTWARE AND HARDWARE SOLUTIONS FOR EMBEDDED WORLD ...making it simple

MCU Cards for BIGAVR2 Development System

The BIGAVR2 development system is supported by empty 64- and 100-pin MCU cards. Schematics provided herein show these MCU cards with soldered microcontrollers. Instead of microcontrollers used in these examples, you can choose and solder another ones. Prior to soldering, check which microcontrollers can be placed on the respective MCU card just to be sure that they are compatible.

Supported microcontrollers:

64-pin MCU cards support the following microcontrollers: ATmega128, ATmega169, ATmega165, ATmega64, ATmega2561, ATmega1281, ATmega329, ATmega649, ATmega325 and ATmega645.

100-pin MCU cards support the following microcontrollers: ATmega640, ATmega1280 and ATmega2560.

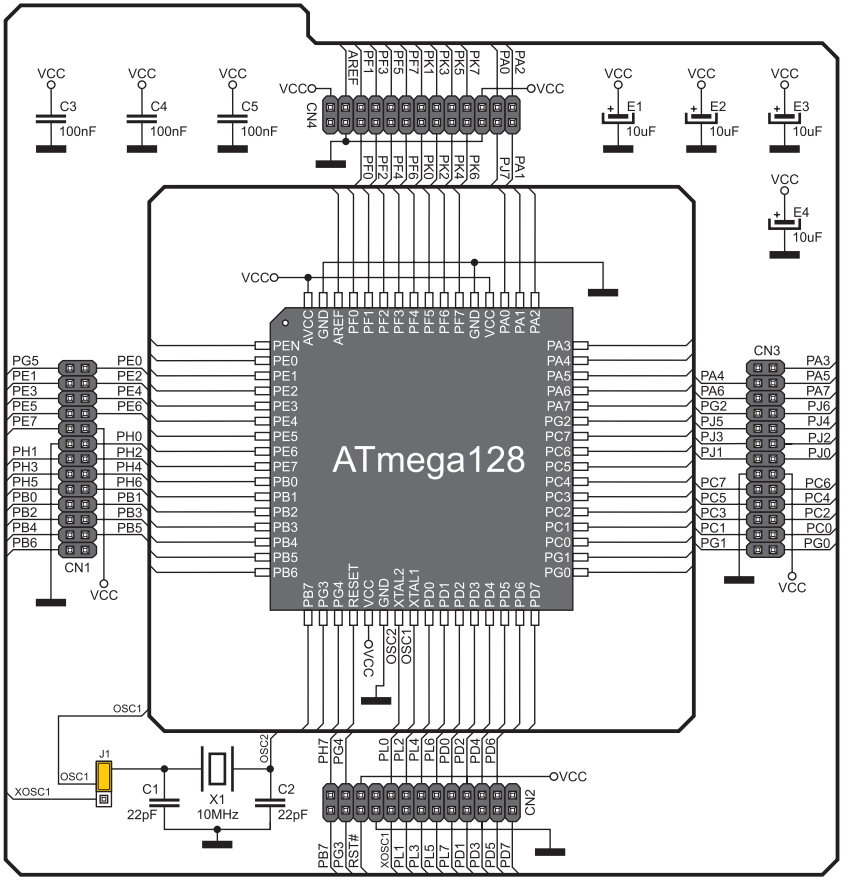

Figure 1: 64-pin MCU card and microcontroller connection schematic

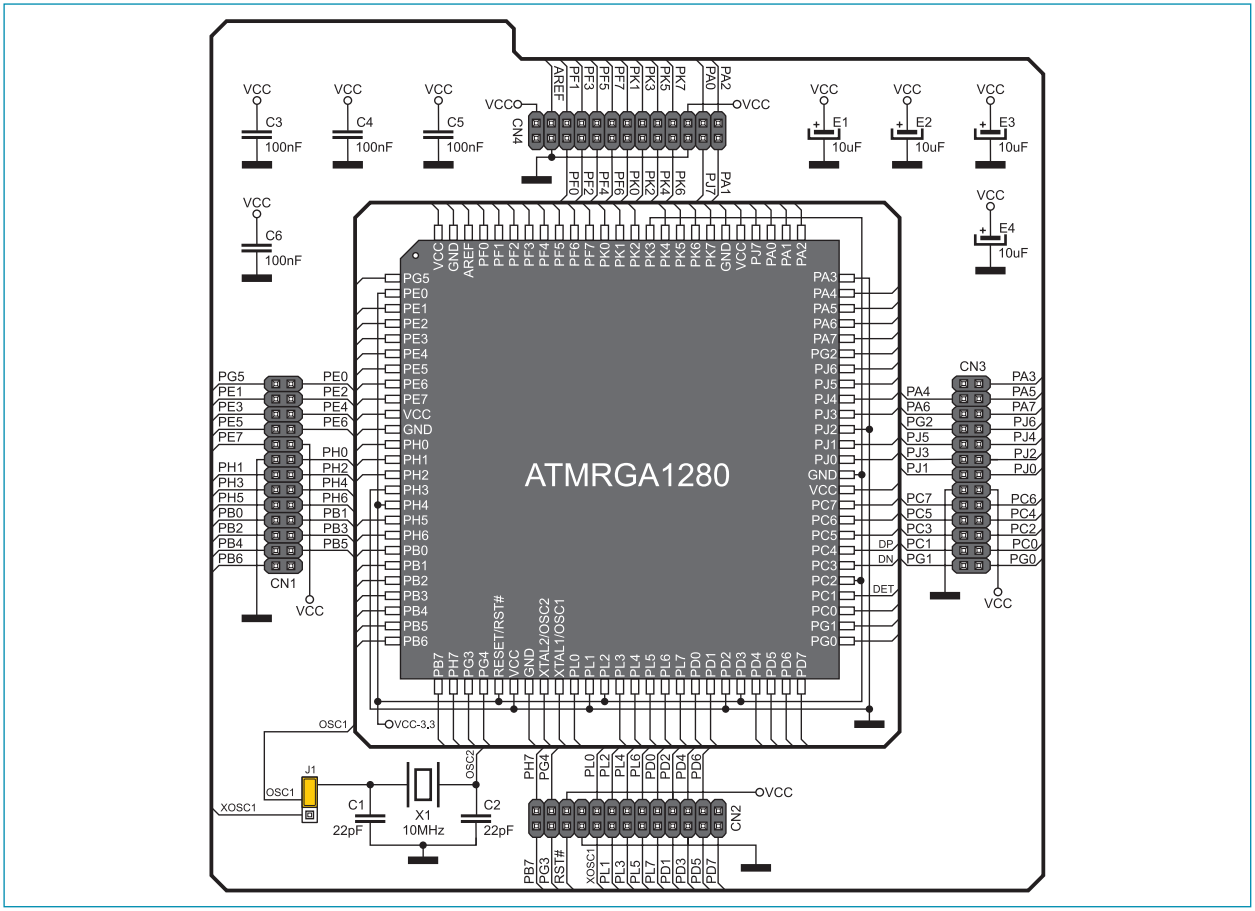

Figure 2: 100-pin MCU card and microcontroller connection schematic

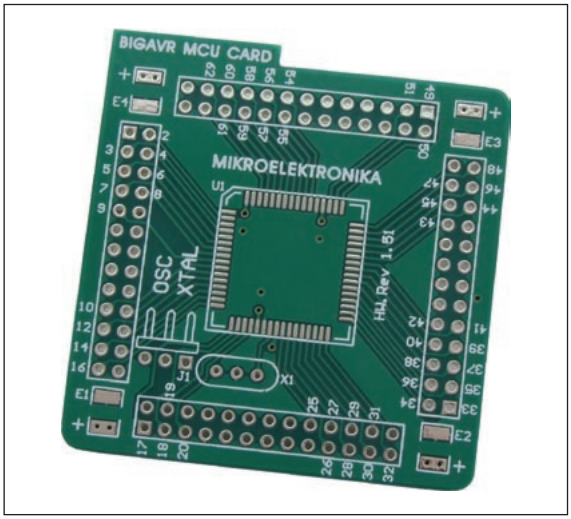

Figure 3: Empty MCU card

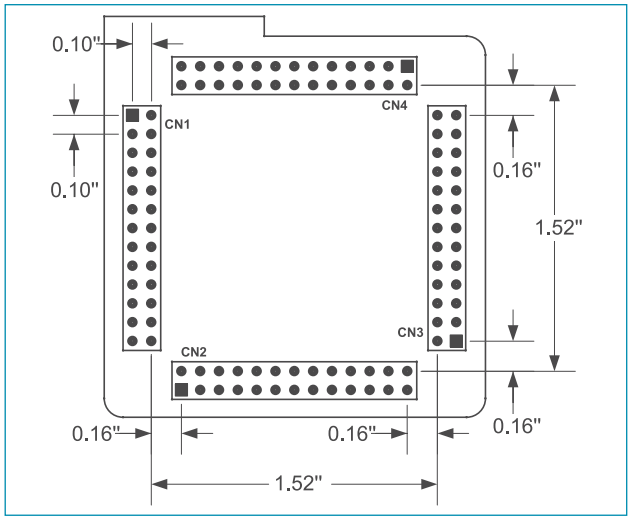

Figure 1-4: Dimensions of MCU card for BIGAVR2

If you want to learn more about our products, please visit our website at www.mikroe.com

If you are experiencing some problems with any of our products or just need additional information, please place your ticket at www.mikroe.com/en/support

If you have any questions, comments or business proposals, do not hesitate to contact us at office@mikroe.com