Octal 3-State Noninverting Bus Transceiver with LSTTL Compatible Inputs

High-Performance Silicon-Gate CMOS

MC74HCT245A

The MC74HCT245A is identical in pinout to the LS245. This device may be used as a level converter for interfacing TTL or NMOS outputs to High Speed CMOS inputs.

The MC74HCT245A is a 3-state noninverting transceiver that is used for 2-way asynchronous communication between data buses. The device has an active-low Output Enable pin, which is used to place the I/O ports into high-impedance states. The Direction control determines whether data flows from A to B or from B to A.

Features

- Output Drive Capability: 15 LSTTL Loads
- TTL/NMOS Compatible Input Levels
- Outputs Directly Interface to CMOS, NMOS and TTL
- Operating Voltage Range: 4.5 V to 5.5 V
- Low Input Current: 1.0 μA
- In Compliance with the Requirements Defined by JEDEC Standard No. 7 A
- Chip Complexity: 304 FETs or 76 Equivalent Gates
- These Devices are Pb-Free and are RoHS Compliant

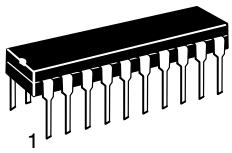

PDIP-20
N SUFFIX
CASE 738

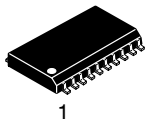

SOIC-20W
DW SUFFIX
CASE 751D

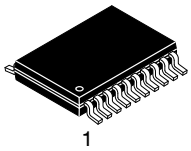

TSSOP-20
DT SUFFIX
CASE 948E

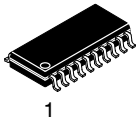

SOEIAJ-20
F SUFFIX
CASE 967

PIN ASSIGNMENT

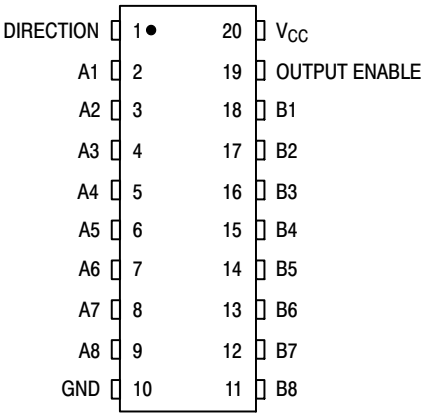

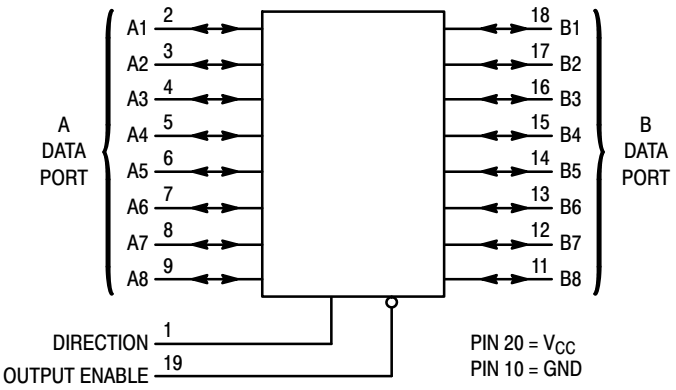

Figure 1. Logic Diagram

ORDERING INFORMATION

See detailed ordering, shipping information, and marking information on page 6 of this data sheet.

NOTE: Some of the devices on this data sheet have been **DISCONTINUED**. Please refer to the table on page 6.

Design Criteria	Value	Unit
Internal Gate Count*	76	ea
Internal Gate Propagation Delay	1.0	ns
Internal Gate Power Dissipation	5.0	μW
Speed Power Product	0.005	pJ

* Equivalent to a two-input NAND gate.

FUNCTION TABLE

Control Inputs		Operation
Output Enable	Direction	
L	L	Data Transmitted from Bus B to Bus A
L	H	Data Transmitted from Bus A to Bus B
H	X	Buses Isolated (High-Impedance State)

X = Don't Care

© Semiconductor Components Industries, LLC, 2011

MAXIMUM RATINGS

Symbol	Parameter	Value	Unit
V_{CC}	DC Supply Voltage (Referenced to GND)	– 0.5 to + 7.0	V
V_{in}	DC Input Voltage (Referenced to GND)	– 0.5 to V_{CC} + 0.5	V
V_{out}	DC Output Voltage (Referenced to GND)	– 0.5 to V_{CC} + 0.5	V
I_{in}	DC Input Current, per Pin	±20	mA
I_{out}	DC Output Current, per Pin	±35	mA
I_{CC}	DC Supply Current, V_{CC} and GND Pins	±75	mA
P_D	Power Dissipation in Still Air, PDIP† SOIC Package† TSSOP Package†	750 500 450	mW
T_{stg}	Storage Temperature	–65 to +150	°C
T_L	Lead Temperature, 1 mm from Case for 10 Secs (PDIP, SOIC, SSOP or TSSOP Package)	260	°C

Stresses exceeding those listed in the Maximum Ratings table may damage the device. If any of these limits are exceeded, device functionality should not be assumed, damage may occur and reliability may be affected.

This device contains protection circuitry to guard against damage due to high static voltages or electric fields. However, precautions must be taken to avoid applications of any voltage higher than maximum rated voltages to this high-impedance circuit. For proper operation, V_{in} and V_{out} should be constrained to the range GND ≤ (V_{in} or V_{out}) ≤ V_{CC}.

Unused inputs must always be tied to an appropriate logic voltage level (e.g., either GND or V_{CC}). Unused outputs must be left open.

† Derating – Plastic DIP: – 10 mW/°C from 65 °C to 125 °C
SOIC Package: – 7 mW/°C from 65 °C to 125 °C
TSSOP Package: – 6.1 mW/°C from 65 °C to 125 °C

RECOMMENDED OPERATING CONDITIONS

Symbol	Parameter	Min	Max	Unit
V_{CC}	DC Supply Voltage (Referenced to GND)	4.5	5.5	V
V_{in}, V_{out}	DC Input Voltage, Output Voltage (Referenced to GND)	0	V_{CC}	V
T_A	Operating Temperature, All Package Types	–55	+125	°C
t_r, t_f	Input Rise and Fall Time (Figure 1)	0	500	ns

Share Feedback
Your Opinion Matters

DC ELECTRICAL CHARACTERISTICS (Voltages Referenced to GND)

Symbol	Parameter	Test Conditions	V_{CC} V	Guaranteed Limit –55 to 25 °C	≤85 °C	≤125 °C	Unit
V_{IH}	Minimum High-Level Input Voltage	V_{out} = 0.1 V or V_{CC} – 0.1 V $\|I_{out}\|$ ≤ 20 μA	4.5 5.5	2.0 2.0	2.0 2.0	2.0 2.0	V
V_{IL}	Maximum Low-Level Input Voltage	V_{out} = 0.1 V or V_{CC} – 0.1 V $\|I_{out}\|$ ≤ 20 μA	4.5 5.5	0.8 0.8	0.8 0.8	0.8 0.8	V
V_{OH}	Minimum High-Level Output Voltage	V_{in} = V_{IH} or V_{IL} $\|I_{out}\|$ ≤ 20 μA	4.5 5.5	4.4 5.4	4.4 5.4	4.4 5.4	V
		V_{in} = V_{IH} or V_{IL} $\|I_{out}\|$ ≤ 6.0 mA	4.5	3.98	3.84	3.7	
V_{OL}	Maximum Low-Level Output Voltage	V_{in} = V_{IH} or V_{IL} $\|I_{out}\|$ ≤ 20 μA	4.5 5.5	0.1 0.1	0.1 0.1	0.1 0.1	V
		V_{in} = V_{IH} or V_{IL} $\|I_{out}\|$ ≤ 6.0 mA	4.5	0.26	0.33	0.4	
I_{in}	Maximum Input Leakage Current	V_{in} = V_{CC} or GND, Pins 1 or 19	5.5	±0.1	±1.0	±1.0	μA
I_{CC}	Maximum Quiescent Supply Current (per Package)	V_{in} = V_{CC} or GND I_{out} = 0 μA	5.5	4.0	40	160	μA
I_{OZ}	Maximum Three-State Leakage Current	Output in High-Impedance State V_{in} = V_{IL} or V_{IH} V_{out} = V_{CC} or GND, I/O Pins	5.5	±0.5	±5.0	±10	μA
ΔI_{CC}	Additional Quiescent Supply Current	V_{in} = 2.4 V, Any One Input V_{in} = V_{CC} or GND, Other Inputs I_{out} = 0 μA		≥–55 °C	25 °C to 125 °C		
			5.5	2.9	2.4		mA

AC ELECTRICAL CHARACTERISTICS (V_{CC} = 5.0 V ± 10%, C_L = 50 pF, Input t_r = t_f = 6.0 ns)

Symbol	Parameter	Guaranteed Limit –55 to 25 °C	≤85 °C	≤125 °C	Unit
t_{PLH}, t_{PHL}	Maximum Propagation Delay, A to B or B to A (Figures 2 and 4)	22	28	33	ns
t_{PLZ}, t_{PHZ}	Maximum Propagation Delay, Direction or Output Enable to A or B (Figures 3 and 5)	30	36	42	ns
t_{PZL}, t_{PZH}	Maximum Propagation Delay, Output Enable to A or 8 (Figures 3 and 5)	30	36	42	ns
t_{TLH}, t_{THL}	Maximum Output Transition Time. any Output (Figures 2 and 4)	12	15	18	ns
C_{in}	Maximum Input Capacitance (Pin 1 or 19)	10	10	10	pF
C_{out}	Maximum Three-State I/O Capacitance, (I/O in High-Impedance State)	15	15	15	pF

		Typical @ 25 °C, V_{CC} = 5.0 V	
C_{PD}	Power Dissipation Capacitance (Per Enabled Output)*	97	pF

* Used to determine the no-load dynamic power consumption: $P_D = C_{PD} V_{CC}^2 f + I_{CC} V_{CC}$.

Share Feedback
Your Opinion Matters

SWITCHING WAVEFORMS

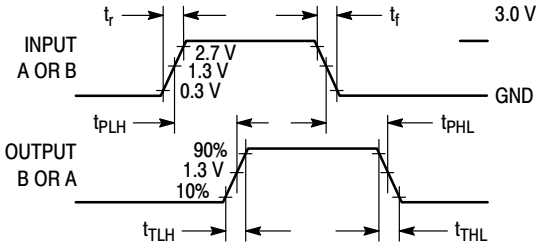

Figure 2.

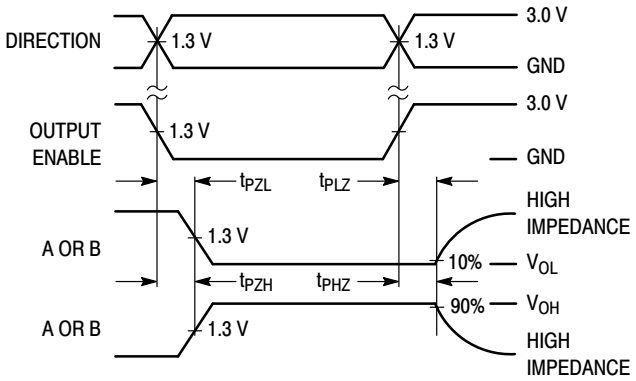

Figure 3.

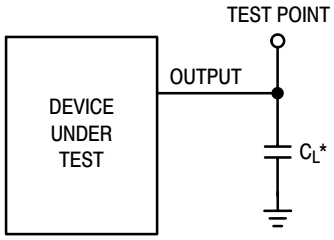

* Includes all probe and jig capacitance

Figure 4.

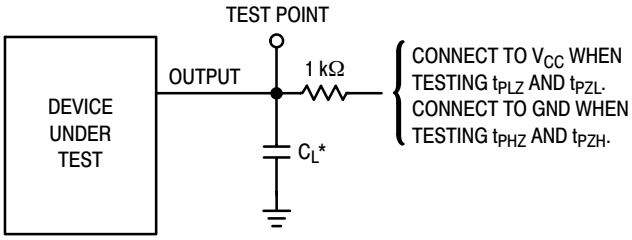

* Includes all probe and jig capacitance

Figure 5. Test Circuit

Share Feedback
Your Opinion Matters

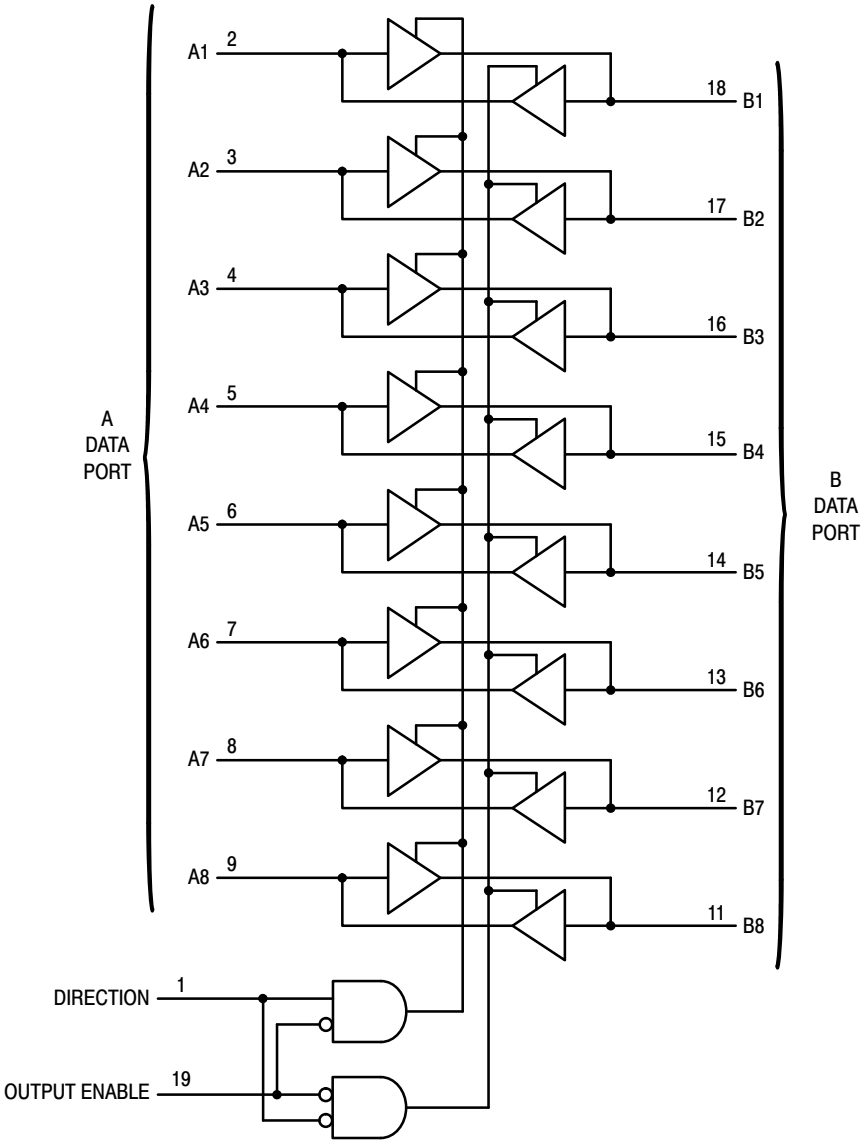

Figure 6. Expanded Logic Diagram

Share Feedback
Your Opinion Matters

ORDERING INFORMATION

Device	Package	Shipping†
MC74HCT245ADWG	SOIC-20 (Pb-Free)	38 Units / Rail
MC74HCT245ADWR2G	SOIC-20 (Pb-Free)	1000 / Tape & Reel
MC74HCT245ADTG	TSSOP-20*	75 Units / Rail
MC74HCT245ADTR2G	TSSOP-20*	2500 / Tape & Reel

DISCONTINUED (Note 1)

MC74HCT245ANG	PDIP-20 (Pb-Free)	18 Units / Rail
MC74HCT245AFELG	SOEIAJ-20 (Pb-Free)	2000 / Tape & Reel

† For information on tape and reel specifications, including part orientation and tape sizes, please refer to our Tape and Reel Packaging Specifications Brochure, BRD8011/D.

* These packages are inherently Pb-Free.

1. **DISCONTINUED:** These devices are not available. Please contact your **onsemi** representative for information. The most current information on these devices may be available on www.onsemi.com.

MARKING DIAGRAMS

PDIP-20

SOIC-20W

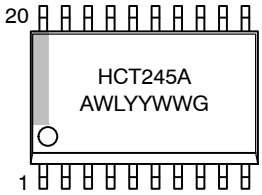

TSSOP-20

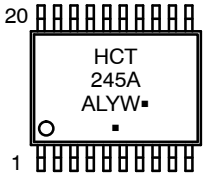

SOEIAJ-20

A = Assembly Location
WL, L = Wafer Lot
YY, Y = Year
WW, W = Work Week
G or ▪ = Pb-Free Package
(Note: Microdot may be in either location)

Share Feedback
Your Opinion Matters

REVISION HISTORY

Revision	Description of Changes	Date
13	Rebranded the Data Sheet to **onsemi** format. MC74HCT245ANG, MC74HCT245AFELG OPNs Marked as Discontinued.	11/05/2025

This document has undergone updates prior to the inclusion of this revision history table. The changes tracked here only reflect updates made on the noted approval dates.

Share Feedback
Your Opinion Matters

PACKAGE DIMENSIONS

PDIP−20
N SUFFIX
PLASTIC DIP PACKAGE
CASE 738−03
ISSUE E

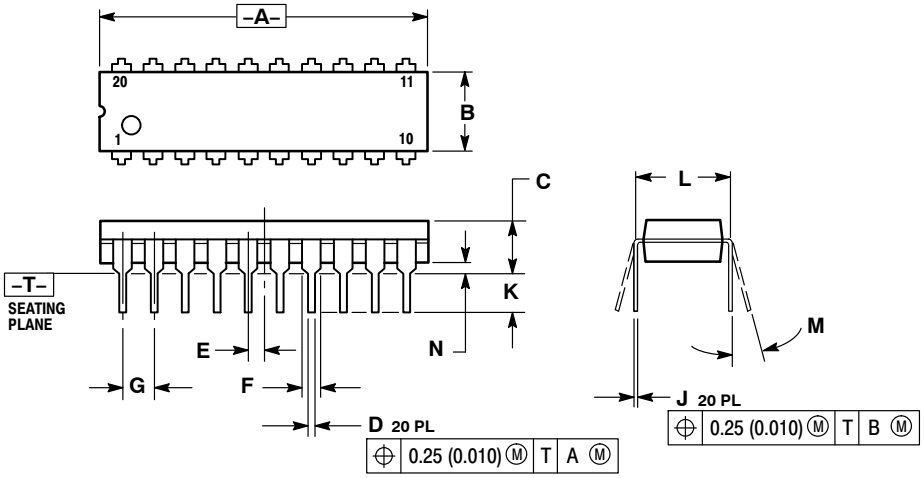

NOTES:
1. DIMENSIONING AND TOLERANCING PER ANSI Y14.5M, 1982.
2. CONTROLLING DIMENSION: INCH.
3. DIMENSION L TO CENTER OF LEAD WHEN FORMED PARALLEL.
4. DIMENSION B DOES NOT INCLUDE MOLD FLASH.

	INCHES		MILLIMETERS	
DIM	MIN	MAX	MIN	MAX
A	1.010	1.070	25.66	27.17
B	0.240	0.260	6.10	6.60
C	0.150	0.180	3.81	4.57
D	0.015	0.022	0.39	0.55
E	0.050 BSC		1.27 BSC	
F	0.050	0.070	1.27	1.77
G	0.100 BSC		2.54 BSC	
J	0.008	0.015	0.21	0.38
K	0.110	0.140	2.80	3.55
L	0.300 BSC		7.62 BSC	
M	0°	15°	0°	15°
N	0.020	0.040	0.51	1.01

Share Feedback
Your Opinion Matters

PACKAGE DIMENSIONS

SOEIAJ−20
F SUFFIX
CASE 967−01
ISSUE A

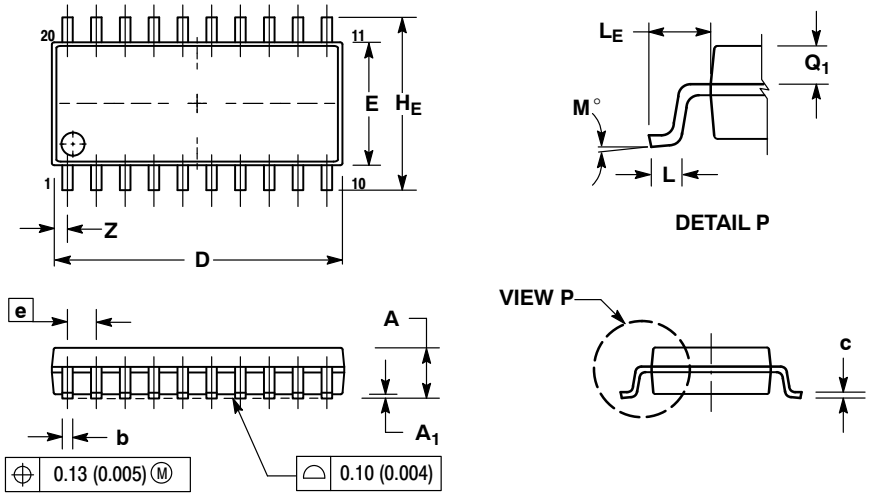

NOTES:
1. DIMENSIONING AND TOLERANCING PER ANSI Y14.5M, 1982.
2. CONTROLLING DIMENSION: MILLIMETER.
3. DIMENSIONS D AND E DO NOT INCLUDE MOLD FLASH OR PROTRUSIONS AND ARE MEASURED AT THE PARTING LINE. MOLD FLASH OR PROTRUSIONS SHALL NOT EXCEED 0.15 (0.006) PER SIDE.
4. TERMINAL NUMBERS ARE SHOWN FOR REFERENCE ONLY.
5. THE LEAD WIDTH DIMENSION (b) DOES NOT INCLUDE DAMBAR PROTRUSION. ALLOWABLE DAMBAR PROTRUSION SHALL BE 0.08 (0.003) TOTAL IN EXCESS OF THE LEAD WIDTH DIMENSION AT MAXIMUM MATERIAL CONDITION. DAMBAR CANNOT BE LOCATED ON THE LOWER RADIUS OR THE FOOT. MINIMUM SPACE BETWEEN PROTRUSIONS AND ADJACENT LEAD TO BE 0.46 (0.018).

	MILLIMETERS		INCHES	
DIM	MIN	MAX	MIN	MAX
A	---	2.05	---	0.081
A_1	0.05	0.20	0.002	0.008
b	0.35	0.50	0.014	0.020
c	0.15	0.25	0.006	0.010
D	12.35	12.80	0.486	0.504
E	5.10	5.45	0.201	0.215
e	1.27 BSC		0.050 BSC	
H_E	7.40	8.20	0.291	0.323
L	0.50	0.85	0.020	0.033
L_E	1.10	1.50	0.043	0.059
M	0 °	10 °	0 °	10 °
Q_1	0.70	0.90	0.028	0.035
Z	---	0.81	---	0.032

Share Feedback
Your Opinion Matters

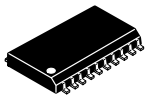

SCALE 1:1

SOIC−20 WB
CASE 751D−05
ISSUE H

DATE 22 APR 2015

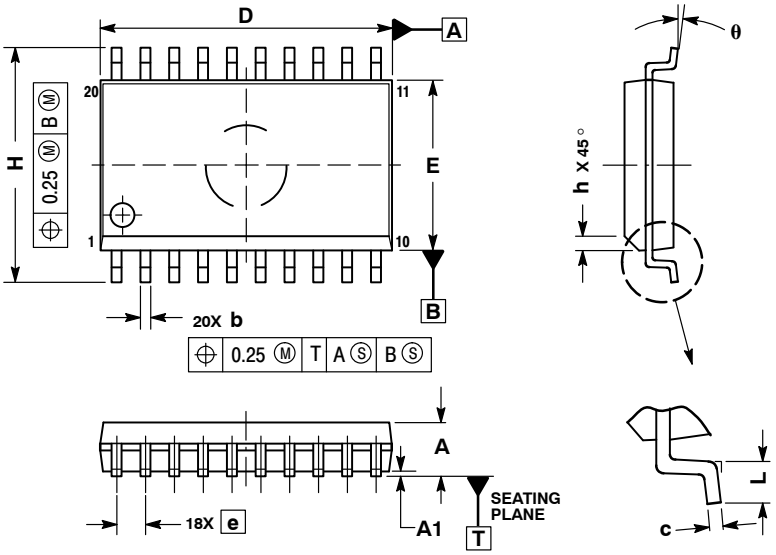

NOTES:
1. DIMENSIONS ARE IN MILLIMETERS.
2. INTERPRET DIMENSIONS AND TOLERANCES PER ASME Y14.5M, 1994.
3. DIMENSIONS D AND E DO NOT INCLUDE MOLD PROTRUSION.
4. MAXIMUM MOLD PROTRUSION 0.15 PER SIDE.
5. DIMENSION B DOES NOT INCLUDE DAMBAR PROTRUSION. ALLOWABLE PROTRUSION SHALL BE 0.13 TOTAL IN EXCESS OF B DIMENSION AT MAXIMUM MATERIAL CONDITION.

	MILLIMETERS	
DIM	MIN	MAX
A	2.35	2.65
A1	0.10	0.25
b	0.35	0.49
c	0.23	0.32
D	12.65	12.95
E	7.40	7.60
e	1.27 BSC	
H	10.05	10.55
h	0.25	0.75
L	0.50	0.90
θ	0°	7°

RECOMMENDED SOLDERING FOOTPRINT*

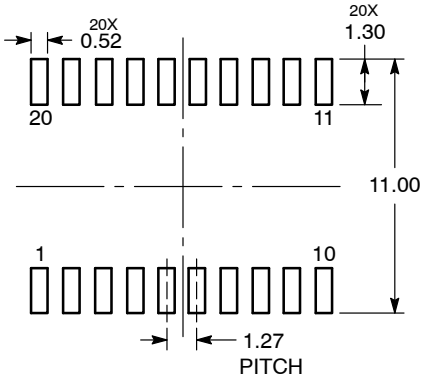

DIMENSIONS: MILLIMETERS

*For additional information on our Pb−Free strategy and soldering details, please download the **onsemi** Soldering and Mounting Techniques Reference Manual, SOLDERRM/D.

GENERIC MARKING DIAGRAM*

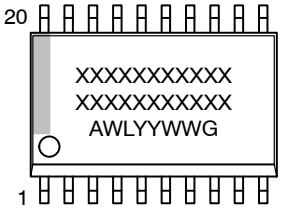

XXXXX = Specific Device Code
A = Assembly Location
WL = Wafer Lot
YY = Year
WW = Work Week
G = Pb−Free Package

*This information is generic. Please refer to device data sheet for actual part marking. Pb−Free indicator, "G" or microdot "▪", may or may not be present. Some products may not follow the Generic Marking.

DOCUMENT NUMBER:	98ASB42343B	Electronic versions are uncontrolled except when accessed directly from the Document Repository. Printed versions are uncontrolled except when stamped "CONTROLLED COPY" in red.
DESCRIPTION:	SOIC−20 WB	PAGE 1 OF 1

onsemi and onsemi are trademarks of Semiconductor Components Industries, LLC dba **onsemi** or its subsidiaries in the United States and/or other countries. **onsemi** reserves the right to make changes without further notice to any products herein. **onsemi** makes no warranty, representation or guarantee regarding the suitability of its products for any particular purpose, nor does **onsemi** assume any liability arising out of the application or use of any product or circuit, and specifically disclaims any and all liability, including without limitation special, consequential or incidental damages. **onsemi** does not convey any license under its patent rights nor the rights of others.

TSSOP−20 WB
CASE 948E
ISSUE D

DATE 17 FEB 2016

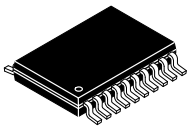

SCALE 2:1

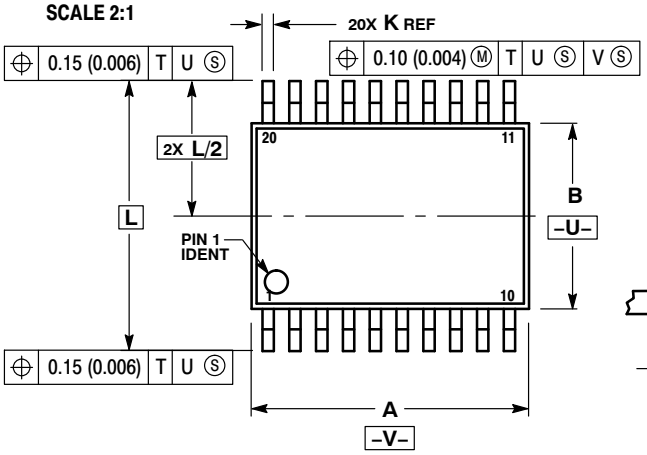

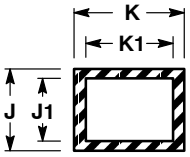

SECTION N−N

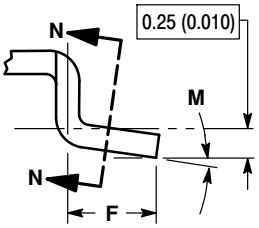

DETAIL E

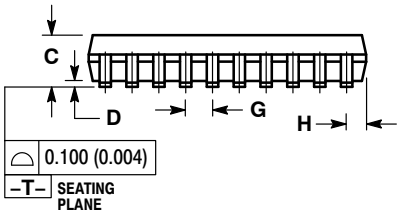

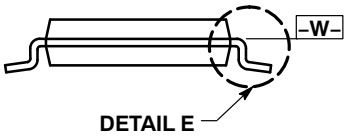

NOTES:
1. DIMENSIONING AND TOLERANCING PER ANSI Y14.5M, 1982.
2. CONTROLLING DIMENSION: MILLIMETER.
3. DIMENSION A DOES NOT INCLUDE MOLD FLASH, PROTRUSIONS OR GATE BURRS. MOLD FLASH OR GATE BURRS SHALL NOT EXCEED 0.15 (0.006) PER SIDE.
4. DIMENSION B DOES NOT INCLUDE INTERLEAD FLASH OR PROTRUSION. INTERLEAD FLASH OR PROTRUSION SHALL NOT EXCEED 0.25 (0.010) PER SIDE.
5. DIMENSION K DOES NOT INCLUDE DAMBAR PROTRUSION. ALLOWABLE DAMBAR PROTRUSION SHALL BE 0.08 (0.003) TOTAL IN EXCESS OF THE K DIMENSION AT MAXIMUM MATERIAL CONDITION.
6. TERMINAL NUMBERS ARE SHOWN FOR REFERENCE ONLY.
7. DIMENSION A AND B ARE TO BE DETERMINED AT DATUM PLANE −W−.

	MILLIMETERS		INCHES	
DIM	MIN	MAX	MIN	MAX
A	6.40	6.60	0.252	0.260
B	4.30	4.50	0.169	0.177
C	---	1.20	---	0.047
D	0.05	0.15	0.002	0.006
F	0.50	0.75	0.020	0.030
G	0.65 BSC		0.026 BSC	
H	0.27	0.37	0.011	0.015
J	0.09	0.20	0.004	0.008
J1	0.09	0.16	0.004	0.006
K	0.19	0.30	0.007	0.012
K1	0.19	0.25	0.007	0.010
L	6.40 BSC		0.252 BSC	
M	0°	8°	0°	8°

RECOMMENDED SOLDERING FOOTPRINT*

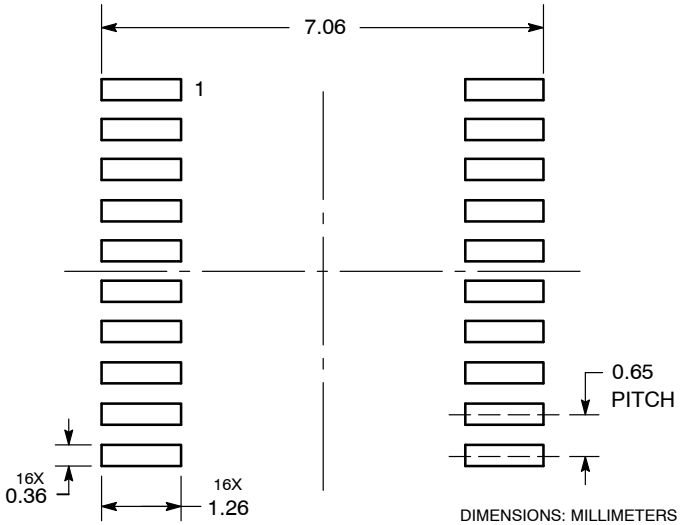

DIMENSIONS: MILLIMETERS

*For additional information on our Pb−Free strategy and soldering details, please download the **onsemi** Soldering and Mounting Techniques Reference Manual, SOLDERRM/D.

GENERIC MARKING DIAGRAM*

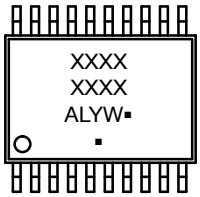

A = Assembly Location
L = Wafer Lot
Y = Year
W = Work Week
▪ = Pb−Free Package

(Note: Microdot may be in either location)

*This information is generic. Please refer to device data sheet for actual part marking. Pb−Free indicator, “G” or microdot “ ▪”, may or may not be present. Some products may not follow the Generic Marking.

DOCUMENT NUMBER:	98ASH70169A	Electronic versions are uncontrolled except when accessed directly from the Document Repository. Printed versions are uncontrolled except when stamped “CONTROLLED COPY” in red.
DESCRIPTION:	TSSOP−20 WB	PAGE 1 OF 1

onsemi and onsemi are trademarks of Semiconductor Components Industries, LLC dba **onsemi** or its subsidiaries in the United States and/or other countries. **onsemi** reserves the right to make changes without further notice to any products herein. **onsemi** makes no warranty, representation or guarantee regarding the suitability of its products for any particular purpose, nor does **onsemi** assume any liability arising out of the application or use of any product or circuit, and specifically disclaims any and all liability, including without limitation special, consequential or incidental damages. **onsemi** does not convey any license under its patent rights nor the rights of others.

onsemi, onsemi, and other names, marks, and brands are registered and/or common law trademarks of Semiconductor Components Industries, LLC dba "**onsemi**" or its affiliates and/or subsidiaries in the United States and/or other countries. **onsemi** owns the rights to a number of patents, trademarks, copyrights, trade secrets, and other intellectual property. A listing of **onsemi**'s product/patent coverage may be accessed at www.onsemi.com/site/pdf/Patent−Marking.pdf. **onsemi** reserves the right to make changes at any time to any products or information herein, without notice. The information herein is provided "as−is" and **onsemi** makes no warranty, representation or guarantee regarding the accuracy of the information, product features, availability, functionality, or suitability of its products for any particular purpose, nor does **onsemi** assume any liability arising out of the application or use of any product or circuit, and specifically disclaims any and all liability, including without limitation special, consequential or incidental damages. Buyer is responsible for its products and applications using **onsemi** products, including compliance with all laws, regulations and safety requirements or standards, regardless of any support or applications information provided by **onsemi**. "Typical" parameters which may be provided in **onsemi** data sheets and/or specifications can and do vary in different applications and actual performance may vary over time. All operating parameters, including "Typicals" must be validated for each customer application by customer's technical experts. **onsemi** does not convey any license under any of its intellectual property rights nor the rights of others. **onsemi** products are not designed, intended, or authorized for use as a critical component in life support systems or any FDA Class 3 medical devices or medical devices with a same or similar classification in a foreign jurisdiction or any devices intended for implantation in the human body. Should Buyer purchase or use **onsemi** products for any such unintended or unauthorized application, Buyer shall indemnify and hold **onsemi** and its officers, employees, subsidiaries, affiliates, and distributors harmless against all claims, costs, damages, and expenses, and reasonable attorney fees arising out of, directly or indirectly, any claim of personal injury or death associated with such unintended or unauthorized use, even if such claim alleges that **onsemi** was negligent regarding the design or manufacture of the part. **onsemi** is an Equal Opportunity/Affirmative Action Employer. This literature is subject to all applicable copyright laws and is not for resale in any manner.

ADDITIONAL INFORMATION

TECHNICAL PUBLICATIONS:
Technical Library: www.onsemi.com/design/resources/technical−documentation
onsemi Website: www.onsemi.com

ONLINE SUPPORT: www.onsemi.com/support
For additional information, please contact your local Sales Representative at
www.onsemi.com/support/sales