Programmable Timer

MC14541B

The MC14541B programmable timer consists of a 16-stage binary counter, an integrated oscillator for use with an external capacitor and two resistors, an automatic power-on reset circuit, and output control logic.

Timing is initialized by turning on power, whereupon the power-on reset is enabled and initializes the counter, within the specified V_{DD} range. With the power already on, an external reset pulse can be applied. Upon release of the initial reset command, the oscillator will oscillate with a frequency determined by the external RC network. The 16-stage counter divides the oscillator frequency (f_{osc}) with the nth stage frequency being $f_{osc}/2^n$.

Features

- Available Outputs 2^8, 2^{10}, 2^{13} or 2^{16}
- Increments on Positive Edge Clock Transitions
- Built-in Low Power RC Oscillator (±2% accuracy over temperature range and ±20% supply and ±3% over processing at < 10 kHz)
- Oscillator May Be Bypassed if External Clock Is Available (Apply external clock to Pin 3)
- External Master Reset Totally Independent of Automatic Reset Operation
- Operates as 2^n Frequency Divider or Single Transition Timer
- Q/$\overline{Q}$ Select Provides Output Logic Level Flexibility
- Reset (auto or master) Disables Oscillator During Resetting to Provide No Active Power Dissipation
- Clock Conditioning Circuit Permits Operation with Very Slow Clock Rise and Fall Times
- Automatic Reset Initializes All Counters On Power Up
- Supply Voltage Range = 3.0 Vdc to 18 Vdc with Auto Reset Disabled (Pin 5 = V_{DD})
  = 8.5 Vdc to 18 Vdc with Auto Reset Enabled (Pin 5 = V_{SS})
- NLV Prefix for Automotive and Other Applications Requiring Unique Site and Control Change Requirements; AEC-Q100 Qualified and PPAP Capable
- These Devices are Pb-Free and are RoHS Compliant

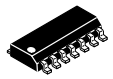

SOIC-14
D SUFFIX
CASE 751A

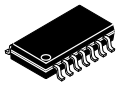

SOEIAJ-14
F SUFFIX
CASE 965

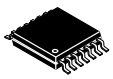

TSSOP-14
DT SUFFIX
CASE 948G

PIN ASSIGNMENT

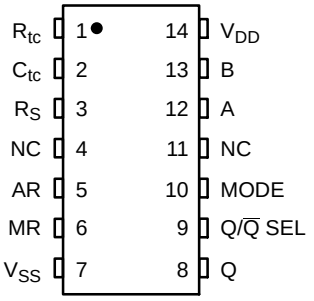

NC = NO CONNECTION

MARKING DIAGRAMS

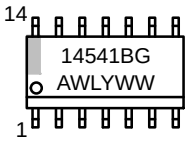

SOIC-14

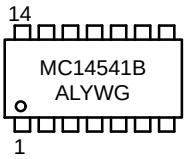

SOEIAJ-14

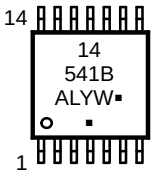

TSSOP-14

A	= Assembly Location
WL, L	= Wafer Lot
YY, Y	= Year
WW, W	= Work Week
G or ▪	= Pb-Free Package

(Note: Microdot may be in either location)

ORDERING INFORMATION

See detailed ordering and shipping information in the package dimensions section on page 2 of this data sheet.

NOTE: Some of the devices on this data sheet have been **DISCONTINUED**. Please refer to the table on page 2.

© Semiconductor Components Industries, LLC, 2014

MAXIMUM RATINGS (Voltages Referenced to V_{SS})

Symbol	Parameter	Value	Unit
V_{DD}	DC Supply Voltage Range	−0.5 to +18.0	V
V_{in}, V_{out}	Input or Output Voltage Range, (DC or Transient)	−0.5 to V_{DD} + 0.5	V
I_{in}	Input Current (DC or Transient)	±10 (per Pin)	mA
I_{out}	Output Current (DC or Transient)	±45 (per Pin)	mA
P_D	Power Dissipation, per Package (Note 1)	500	mW
T_A	Ambient Temperature Range	−55 to +125	°C
T_{stg}	Storage Temperature Range	−65 to +150	°C
T_L	Lead Temperature, (8-Second Soldering)	260	°C

Stresses exceeding those listed in the Maximum Ratings table may damage the device. If any of these limits are exceeded, device functionality should not be assumed, damage may occur and reliability may be affected. Operating the device outside its recommended conditions, but still within its maximum rated limits may not cause immediate damage. However, doing so can lead to reduced performance, unpredictable behavior, and potentially shorten the device's lifespan or reliability.

1. Temperature Derating: "D/DW" Packages: –7.0 mW/°C From 65 °C To 125 °C

ORDERING INFORMATION

Device	Package	Shipping†
MC14541BDG	SOIC-14 (Pb-Free)	55 Units / Rail
MC14541BDR2G	SOIC-14 (Pb-Free)	2500 / Tape & Reel
NLV14541BDR2G*	SOIC-14 (Pb-Free)	2500 / Tape & Reel
MC14541BDTR2G	TSSOP-14 (Pb-Free)	2500 / Tape & Reel
NLV14541BDTR2G*	TSSOP-14 (Pb-Free)	2500 / Tape & Reel

DISCONTINUED (Note 2)

NLV14541BDG*	SOIC-14 (Pb-Free)	55 Units / Rail
MC14541BFELG	SOEIAJ-14 (Pb-Free)	2000 / Tape & Reel

† For information on tape and reel specifications, including part orientation and tape sizes, please refer to our Tape and Reel Packaging Specifications Brochure, BRD8011/D.

* NLV Prefix for Automotive and Other Applications Requiring Unique Site and Control Change Requirements; AEC-Q100 Qualified and PPAP Capable.

2. **DISCONTINUED:** These devices are not recommended for new design. Please contact your **onsemi** representative for information. The most current information on these devices may be available on www.onsemi.com.

Share Feedback
Your Opinion Matters

ELECTRICAL CHARACTERISTICS (Voltages Referenced to V_{SS})

Characteristic	Symbol	V_{DD} Vdc	−55 °C Min	−55 °C Max	25 °C Min	25 °C Typ (Note 3)	25 °C Max	125 °C Min	125 °C Max	Unit
Output Voltage "0" Level V_{in} = V_{DD} or 0	V_{OL}	5.0 10 15	– – –	0.05 0.05 0.05	– – –	0 0 0	0.05 0.05 0.05	– – –	0.05 0.05 0.05	Vdc
"1" Level V_{in} = 0 or V_{DD}	V_{OH}	5.0 10 15	4.95 9.95 14.95	– – –	4.95 9.95 14.95	5.0 10 15	– – –	4.95 9.95 14.95	– – –	Vdc
Input Voltage "0" Level (V_O = 4.5 or 0.5 Vdc) (V_O = 9.0 or 1.0 Vdc) (V_O = 13.5 or 1.5 Vdc)	V_{IL}	5.0 10 15	– – –	1.5 3.0 4.0	– – –	2.25 4.50 6.75	1.5 3.0 4.0	– – –	1.5 3.0 4.0	Vdc
"1" Level (V_O = 0.5 or 4.5 Vdc) (V_O = 1.0 or 9.0 Vdc) (V_O = 1.5 or 13.5 Vdc)	V_{IH}	5.0 10 15	3.5 7.0 11	– – –	3.5 7.0 11	2.75 5.50 8.25	– – –	3.5 7.0 11	– – –	Vdc
Output Drive Current (V_{OH} = 2.5 Vdc) Source (V_{OH} = 9.5 Vdc) (V_{OH} = 13.5 Vdc)	I_{OH}	5.0 10 15	–4.19 –7.96 –16.3	– – –	–3.38 –6.42 –13.2	–6.75 –12.83 –26.33	– – –	–2.37 –4.49 –9.24	– – –	mAdc
(V_{OL} = 0.4 Vdc) Sink (V_{OL} = 0.5 Vdc) (V_{OL} = 1.5 Vdc)	I_{OL}	5.0 10 15	1.93 4.96 19.3	– – –	1.56 4.0 15.6	3.12 8.0 31.2	– – –	1.09 2.8 10.9	– – –	mAdc
Input Current	I_{in}	15	–	±0.1	–	±0.00001	±0.1	–	±1.0	μAdc
Input Capacitance (V_{in} = 0)	C_{in}	–	–	–	–	5.0	7.5	–	–	pF
Quiescent Current (Pin 5 is High) Auto Reset Disabled	I_{DD}	5.0 10 15	– – –	5.0 10 20	– – –	0.005 0.010 0.015	5.0 10 20	– – –	150 300 600	μAdc
Auto Reset Quiescent Current (Pin 5 is low)	I_{DDR}	10 15	– –	250 500	– –	30 82	250 500	– –	1500 2000	μAdc
Supply Current (Notes 4 & 5) (Dynamic plus Quiescent)	I_D	5.0 10 15	I_D = (0.4 μA/kHz) f + I_{DD} I_D = (0.8 μA/kHz) f + I_{DD} I_D = (1.2 μA/kHz) f + I_{DD}							μAdc

Product parametric performance is indicated in the Electrical Characteristics for the listed test conditions, unless otherwise noted. Product performance may not be indicated by the Electrical Characteristics if operated under different conditions.

3. Data labelled "Typ" is not to be used for design purposes but is intended as an indication of the IC's potential performance.
4. The formulas given are for the typical characteristics only at 25 °C.
5. When using the on chip oscillator the total supply current (in μAdc) becomes: $I_T = I_D + 2\ C_{tc}\ V_{DD}\ f \times 10^{-3}$ where I_D is in μA, C_{tc} is in pF, V_{DD} in Volts DC, and f in kHz. (see Fig. 3) Dissipation during power-on with automatic reset enabled is typically 50 μA @ V_{DD} = 10 Vdc.

Share Feedback
Your Opinion Matters

SWITCHING CHARACTERISTICS (Note 6) (C_L = 50 pF, T_A = 25 °C)

Characteristic	Symbol	V_{DD}	Min	Typ (Note 7)	Max	Unit
Output Rise and Fall Time t_{TLH}, t_{THL} = (1.5 ns/pF) C_L + 25 ns t_{TLH}, t_{THL} = (0.75 ns/pF) C_L + 12.5 ns t_{TLH}, t_{THL} = (0.55 ns/pF) C_L + 9.5 ns	t_{TLH}, t_{THL}	5.0 10 15	– – –	100 50 40	200 100 80	ns
Propagation Delay, Clock to Q (2^8 Output) t_{PLH}, t_{PHL} = (1.7 ns/pF) C_L + 3415 ns t_{PLH}, t_{PHL} = (0.66 ns/pF) C_L + 1217 ns t_{PLH}, t_{PHL} = (0.5 ns/pF) C_L + 875 ns	t_{PLH} t_{PHL}	5.0 10 15	– – –	3.5 1.25 0.9	10.5 3.8 2.9	μs
Propagation Delay, Clock to Q (2^{16} Output) t_{PHL}, t_{PLH} = (1.7 ns/pF) C_L + 5915 ns t_{PHL}, t_{PLH} = (0.66 ns/pF) C_L + 3467 ns t_{PHL}, t_{PLH} = (0.5 ns/pF) C_L + 2475 ns	t_{PHL} t_{PLH}	5.0 10 15	– – –	6.0 3.5 2.5	18 10 7.5	μs
Clock Pulse Width	$t_{WH(cl)}$	5.0 10 15	900 300 225	300 100 85	– – –	ns
Clock Pulse Frequency (50% Duty Cycle)	f_{cl}	5.0 10 15	– – –	1.5 4.0 6.0	0.75 2.0 3.0	MHz
MR Pulse Width	$t_{WH(R)}$	5.0 10 15	900 300 225	300 100 85	– – –	ns
Master Reset Removal Time	t_{rem}	5.0 10 15	420 200 200	210 100 100	– – –	ns

6. The formulas given are for the typical characteristics only at 25 °C.
7. Data labelled “Typ” is not to be used for design purposes but is intended as an indication of the IC’s potential performance.

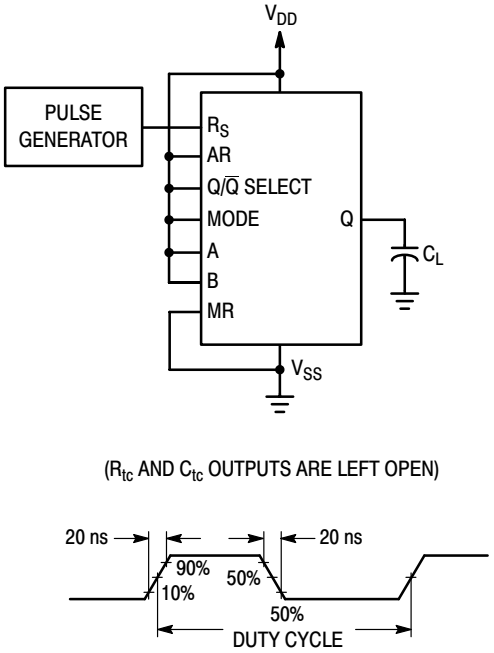

Figure 1. Power Dissipation Test Circuit and Waveform

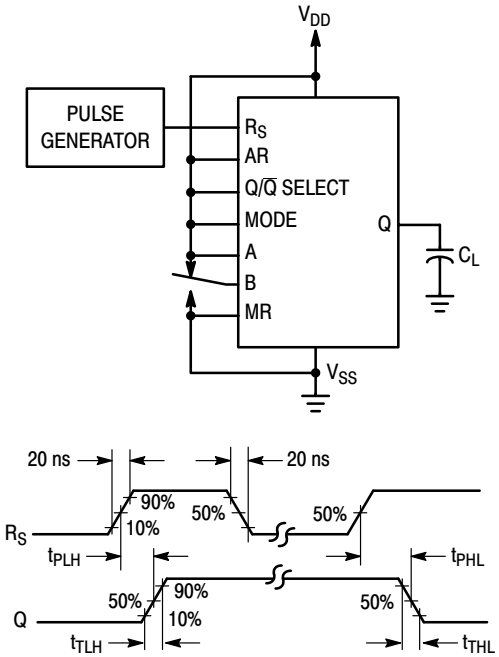

Figure 2. Switching Time Test Circuit and Waveforms

Share Feedback
Your Opinion Matters

EXPANDED BLOCK DIAGRAM

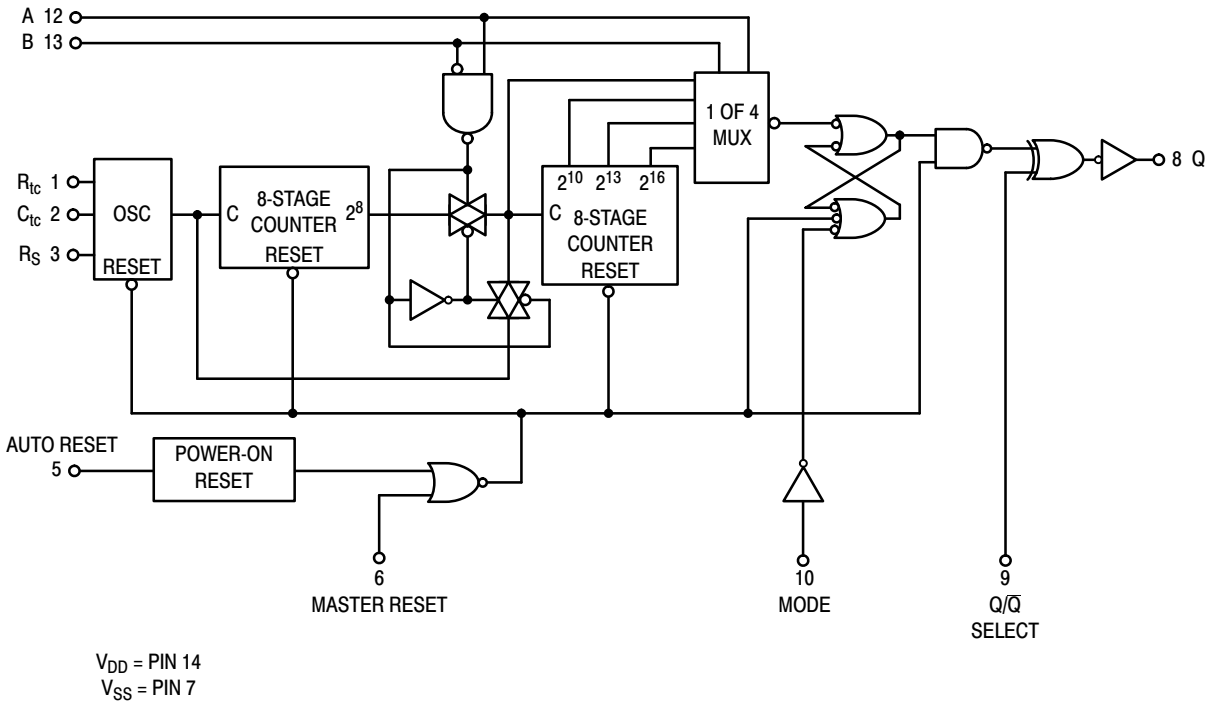

FREQUENCY SELECTION TABLE

A	B	Number of Counter Stages n	Count 2^n
0	0	13	8192
0	1	10	1024
1	0	8	256
1	1	16	65536

TRUTH TABLE

Pin	State	
	0	1
Auto Reset, 5	Auto Reset Operating	Auto Reset Disabled
Master Reset, 6	Timer Operational	Master Reset On
Q/$\overline{Q}$, 9	Output Initially Low After Reset	Output Initially High After Reset
Mode, 10	Single Cycle Mode	Recycle Mode

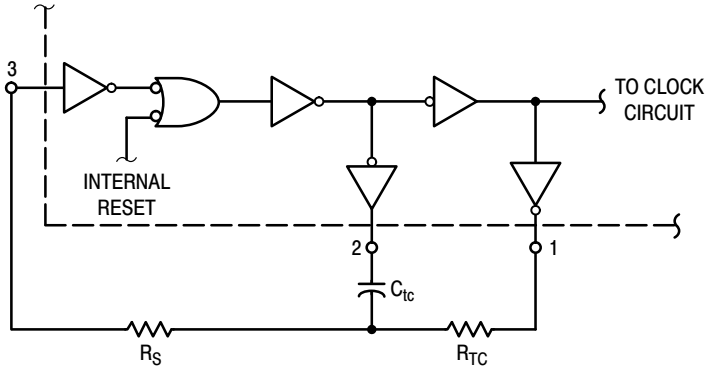

Figure 3. Oscillator Circuit Using RC Configuration

Share Feedback
Your Opinion Matters

TYPICAL RC OSCILLATOR CHARACTERISTICS

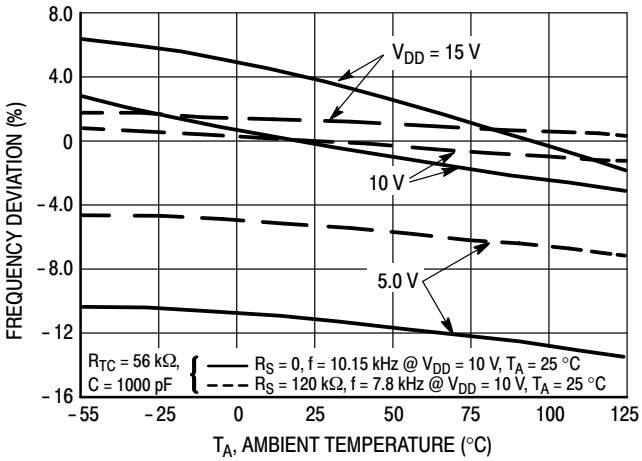

Figure 4. RC Oscillator Stability

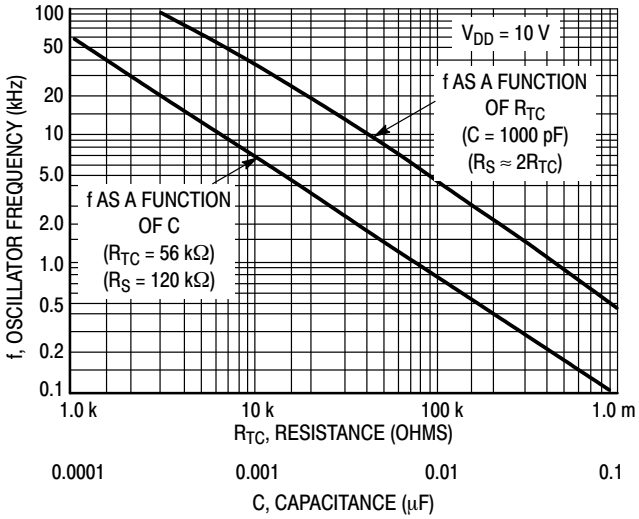

Figure 5. RC Oscillator Frequency as a Function of R_{tc} and C_{tc}

OPERATING CHARACTERISTICS

With Auto Reset pin set to a “0” the counter circuit is initialized by turning on power. Or with power already on, the counter circuit is reset when the Master Reset pin is set to a “1”. Both types of reset will result in synchronously resetting all counter stages independent of counter state. Auto Reset pin when set to a “1” provides a low power operation.

The RC oscillator as shown in Figure 3 will oscillate with a frequency determined by the external RC network i.e.,

$$f = \frac{1}{2.3\, R_{tc} C_{tc}} \qquad \text{if } (1\ \text{kHz} \le f \le 100\ \text{kHz})$$

and $R_S \approx 2\, R_{tc}$ where $R_S \ge 10\ \text{k}\Omega$

The time select inputs (A and B) provide a two-bit address to output any one of four counter stages (2^8, 2^{10}, 2^{13} and 2^{16}). The 2^n counts as shown in the Frequency Selection Table represents the Q output of the Nth stage of the counter. When A is “1”, 2^{16} is selected for both states of B. However, when B is “0”, normal counting is interrupted and the 9th counter stage receives its clock directly from the oscillator (i.e., effectively outputting 2^8).

The Q/$\overline{Q}$ select output control pin provides for a choice of output level. When the counter is in a reset condition and Q/$\overline{Q}$ select pin is set to a “0” the Q output is a “0”, correspondingly when Q/$\overline{Q}$ select pin is set to a “1” the Q output is a “1”.

When the mode control pin is set to a “1”, the selected count is continually transmitted to the output. But, with mode pin “0” and after a reset condition the R_S flip-flop (see Expanded Block Diagram) resets, counting commences, and after 2^{n-1} counts the R_S flip-flop sets which causes the output to change state. Hence, after another 2^{n-1} counts the output will not change. Thus, a Master Reset pulse must be applied or a change in the mode pin level is required to reset the single cycle operation.

DIGITAL TIMER APPLICATION

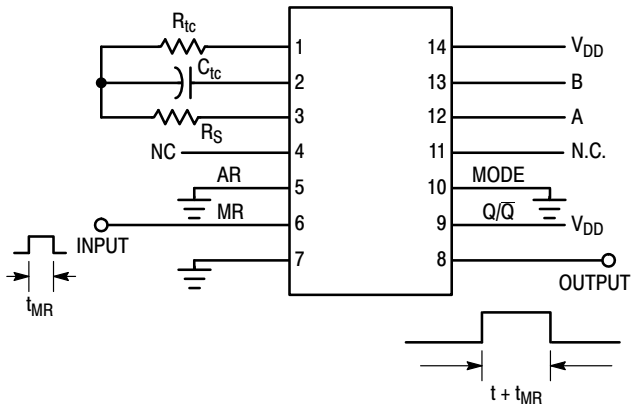

When Master Reset (MR) receives a positive pulse, the internal counters and latch are reset. The Q output goes high and remains high until the selected (via A and B) number of clock pulses are counted, the Q output then goes low and remains low until another input pulse is received.

This “one shot” is fully retriggerable and as accurate as the input frequency. An external clock can be used (pin 3 is the clock input, pins 1 and 2 are outputs) if additional accuracy is needed.

Notice that a setup time equal to the desired pulse width output is required immediately following initial power up, during which time Q output will be high.

Share Feedback
Your Opinion Matters

REVISION HISTORY

Revision	Description of Changes	Date
16	Rebranded the Data Sheet to **onsemi** format. NLV14541BDG, MC14541BFELG OPNs marked as Discontinued.	10/6/2025

This document has undergone updates prior to the inclusion of this revision history table. The changes tracked here only reflect updates made on the noted approval dates.

Share Feedback
Your Opinion Matters

SOEIAJ−14
CASE 965−01
ISSUE B

DATE 29 FEB 2008

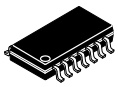

SCALE 1:1

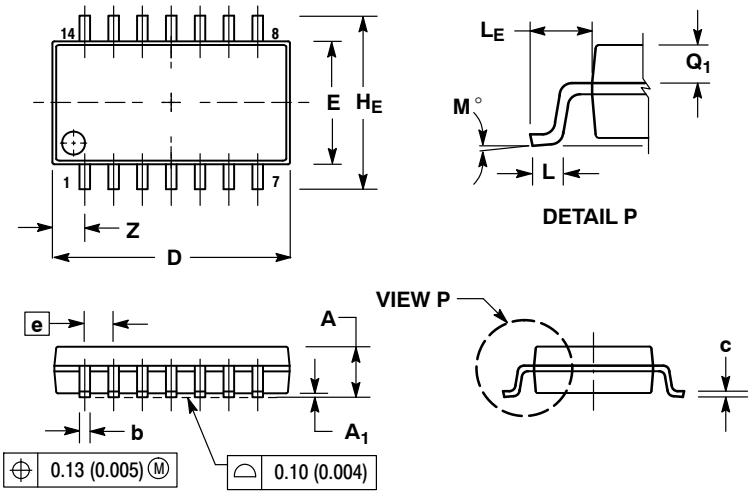

NOTES:
1. DIMENSIONING AND TOLERANCING PER ANSI Y14.5M, 1982.
2. CONTROLLING DIMENSION: MILLIMETER.
3. DIMENSIONS D AND E DO NOT INCLUDE MOLD FLASH OR PROTRUSIONS AND ARE MEASURED AT THE PARTING LINE. MOLD FLASH OR PROTRUSIONS SHALL NOT EXCEED 0.15 (0.006) PER SIDE.
4. TERMINAL NUMBERS ARE SHOWN FOR REFERENCE ONLY.
5. THE LEAD WIDTH DIMENSION (b) DOES NOT INCLUDE DAMBAR PROTRUSION. ALLOWABLE DAMBAR PROTRUSION SHALL BE 0.08 (0.003) TOTAL IN EXCESS OF THE LEAD WIDTH DIMENSION AT MAXIMUM MATERIAL CONDITION. DAMBAR CANNOT BE LOCATED ON THE LOWER RADIUS OR THE FOOT. MINIMUM SPACE BETWEEN PROTRUSIONS AND ADJACENT LEAD TO BE 0.46 (0.018).

	MILLIMETERS		INCHES	
DIM	MIN	MAX	MIN	MAX
A	---	2.05	---	0.081
A_1	0.05	0.20	0.002	0.008
b	0.35	0.50	0.014	0.020
c	0.10	0.20	0.004	0.008
D	9.90	10.50	0.390	0.413
E	5.10	5.45	0.201	0.215
e	1.27 BSC		0.050 BSC	
H_E	7.40	8.20	0.291	0.323
L	0.50	0.85	0.020	0.033
L_E	1.10	1.50	0.043	0.059
M	0 °	10 °	0 °	10 °
Q_1	0.70	0.90	0.028	0.035
Z	---	1.42	---	0.056

DOCUMENT NUMBER:	**98ASH70108A**	Electronic versions are uncontrolled except when accessed directly from the Document Repository. Printed versions are uncontrolled except when stamped "CONTROLLED COPY" in red.	
DESCRIPTION:	**14 LD SOEIAJ**		**PAGE 1 OF 1**

onsemi and onsemi are trademarks of Semiconductor Components Industries, LLC dba **onsemi** or its subsidiaries in the United States and/or other countries. **onsemi** reserves the right to make changes without further notice to any products herein. **onsemi** makes no warranty, representation or guarantee regarding the suitability of its products for any particular purpose, nor does **onsemi** assume any liability arising out of the application or use of any product or circuit, and specifically disclaims any and all liability, including without limitation special, consequential or incidental damages. **onsemi** does not convey any license under its patent rights nor the rights of others.

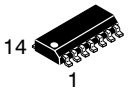

SCALE 1:1

SOIC−14 NB
CASE 751A−03
ISSUE L

DATE 03 FEB 2016

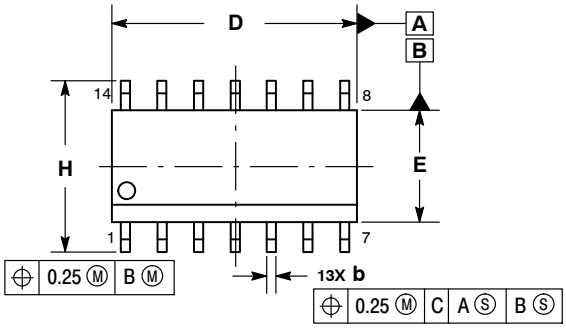

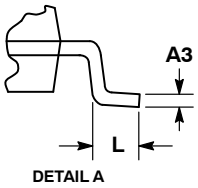

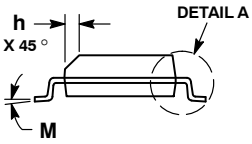

NOTES:
1. DIMENSIONING AND TOLERANCING PER ASME Y14.5M, 1994.
2. CONTROLLING DIMENSION: MILLIMETERS.
3. DIMENSION b DOES NOT INCLUDE DAMBAR PROTRUSION. ALLOWABLE PROTRUSION SHALL BE 0.13 TOTAL IN EXCESS OF AT MAXIMUM MATERIAL CONDITION.
4. DIMENSIONS D AND E DO NOT INCLUDE MOLD PROTRUSIONS.
5. MAXIMUM MOLD PROTRUSION 0.15 PER SIDE.

	MILLIMETERS		INCHES	
DIM	MIN	MAX	MIN	MAX
A	1.35	1.75	0.054	0.068
A1	0.10	0.25	0.004	0.010
A3	0.19	0.25	0.008	0.010
b	0.35	0.49	0.014	0.019
D	8.55	8.75	0.337	0.344
E	3.80	4.00	0.150	0.157
e	1.27 BSC		0.050 BSC	
H	5.80	6.20	0.228	0.244
h	0.25	0.50	0.010	0.019
L	0.40	1.25	0.016	0.049
M	0 °	7 °	0 °	7 °

SOLDERING FOOTPRINT*

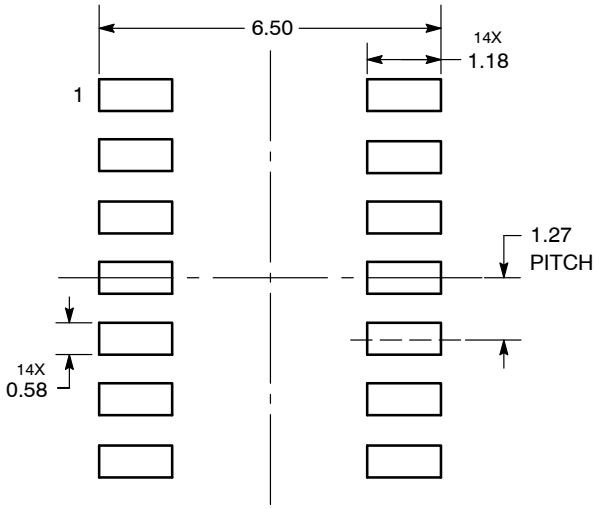

DIMENSIONS: MILLIMETERS

*For additional information on our Pb−Free strategy and soldering details, please download the **onsemi** Soldering and Mounting Techniques Reference Manual, SOLDERRM/D.

GENERIC MARKING DIAGRAM*

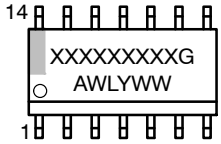

XXXXX	= Specific Device Code
A	= Assembly Location
WL	= Wafer Lot
Y	= Year
WW	= Work Week
G	= Pb−Free Package

*This information is generic. Please refer to device data sheet for actual part marking. Pb−Free indicator, “G” or microdot “▪”, may or may not be present. Some products may not follow the Generic Marking.

STYLES ON PAGE 2

DOCUMENT NUMBER:	98ASB42565B	Electronic versions are uncontrolled except when accessed directly from the Document Repository. Printed versions are uncontrolled except when stamped “CONTROLLED COPY” in red.
DESCRIPTION:	SOIC−14 NB	PAGE 1 OF 2

onsemi and onsemi are trademarks of Semiconductor Components Industries, LLC dba **onsemi** or its subsidiaries in the United States and/or other countries. **onsemi** reserves the right to make changes without further notice to any products herein. **onsemi** makes no warranty, representation or guarantee regarding the suitability of its products for any particular purpose, nor does **onsemi** assume any liability arising out of the application or use of any product or circuit, and specifically disclaims any and all liability, including without limitation special, consequential or incidental damages. **onsemi** does not convey any license under its patent rights nor the rights of others.

SOIC−14
CASE 751A−03
ISSUE L

DATE 03 FEB 2016

STYLE 1:
PIN 1. COMMON CATHODE
2. ANODE/CATHODE
3. ANODE/CATHODE
4. NO CONNECTION
5. ANODE/CATHODE
6. NO CONNECTION
7. ANODE/CATHODE
8. ANODE/CATHODE
9. ANODE/CATHODE
10. NO CONNECTION
11. ANODE/CATHODE
12. ANODE/CATHODE
13. NO CONNECTION
14. COMMON ANODE

STYLE 2:
CANCELLED

STYLE 3:
PIN 1. NO CONNECTION
2. ANODE
3. ANODE
4. NO CONNECTION
5. ANODE
6. NO CONNECTION
7. ANODE
8. ANODE
9. ANODE
10. NO CONNECTION
11. ANODE
12. ANODE
13. NO CONNECTION
14. COMMON CATHODE

STYLE 4:
PIN 1. NO CONNECTION
2. CATHODE
3. CATHODE
4. NO CONNECTION
5. CATHODE
6. NO CONNECTION
7. CATHODE
8. CATHODE
9. CATHODE
10. NO CONNECTION
11. CATHODE
12. CATHODE
13. NO CONNECTION
14. COMMON ANODE

STYLE 5:
PIN 1. COMMON CATHODE
2. ANODE/CATHODE
3. ANODE/CATHODE
4. ANODE/CATHODE
5. ANODE/CATHODE
6. NO CONNECTION
7. COMMON ANODE
8. COMMON CATHODE
9. ANODE/CATHODE
10. ANODE/CATHODE
11. ANODE/CATHODE
12. ANODE/CATHODE
13. NO CONNECTION
14. COMMON ANODE

STYLE 6:
PIN 1. CATHODE
2. CATHODE
3. CATHODE
4. CATHODE
5. CATHODE
6. CATHODE
7. CATHODE
8. ANODE
9. ANODE
10. ANODE
11. ANODE
12. ANODE
13. ANODE
14. ANODE

STYLE 7:
PIN 1. ANODE/CATHODE
2. COMMON ANODE
3. COMMON CATHODE
4. ANODE/CATHODE
5. ANODE/CATHODE
6. ANODE/CATHODE
7. ANODE/CATHODE
8. ANODE/CATHODE
9. ANODE/CATHODE
10. ANODE/CATHODE
11. COMMON CATHODE
12. COMMON ANODE
13. ANODE/CATHODE
14. ANODE/CATHODE

STYLE 8:
PIN 1. COMMON CATHODE
2. ANODE/CATHODE
3. ANODE/CATHODE
4. NO CONNECTION
5. ANODE/CATHODE
6. ANODE/CATHODE
7. COMMON ANODE
8. COMMON ANODE
9. ANODE/CATHODE
10. ANODE/CATHODE
11. NO CONNECTION
12. ANODE/CATHODE
13. ANODE/CATHODE
14. COMMON CATHODE

onsemi and onsemi are trademarks of Semiconductor Components Industries, LLC dba **onsemi** or its subsidiaries in the United States and/or other countries. **onsemi** reserves the right to make changes without further notice to any products herein. **onsemi** makes no warranty, representation or guarantee regarding the suitability of its products for any particular purpose, nor does **onsemi** assume any liability arising out of the application or use of any product or circuit, and specifically disclaims any and all liability, including without limitation special, consequential or incidental damages. **onsemi** does not convey any license under its patent rights nor the rights of others.

© Semiconductor Components Industries, LLC, 2019

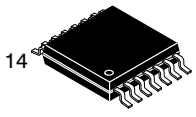

TSSOP−14 5.00x4.40x0.95, 0.65P
CASE 948G
ISSUE D

DATE 30 JUN 2026

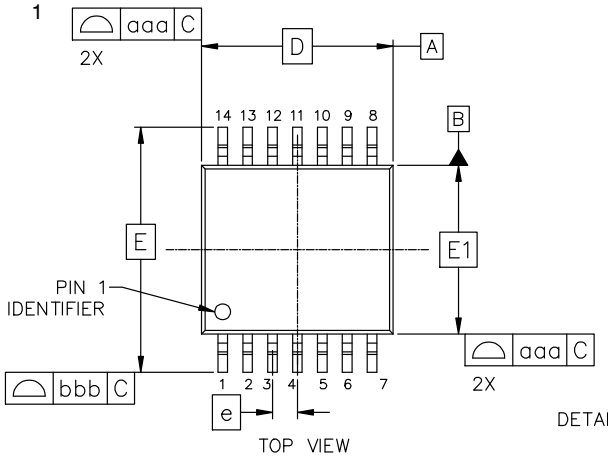

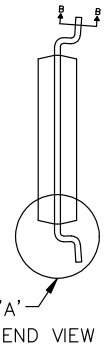

MILLIMETERS			
DIM	MIN	NOM	MAX
A	---	---	1.20
A1	0.05	0.10	0.15
A2	0.85	0.95	1.05
b	0.19	0.25	0.30
b1	0.19	0.22	0.25
c	0.09	0.15	0.20
c1	0.09	0.12	0.16
D	5.00 BSC		
E	6.40 BSC		
E1	4.40 BSC		
e	0.65 BSC		
L	0.50	0.63	0.75
L1	1.00 REF		
L2	0.25 BSC		
Θ	0°	4°	8°
TOLERANCE FORM & POSITION			
aaa	0.10		
bbb	0.15		
ccc	0.08		
ddd	0.10		
eee	0.10		

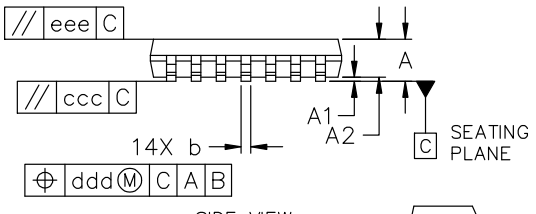

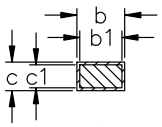

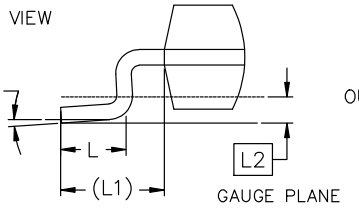

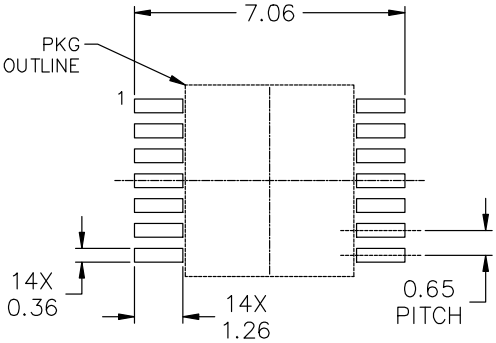

RECOMMENDED MOUNTING FOOTPRINT

*For additional information on our Pb−Free strategy and soldering details, please download the onsemi Soldering and Mounting Techniques Reference Manual, SOLDERRM/D.

NOTES:
1. DIMENSIONING AND TOLERANCING AS PER ASME Y14.5M, 2018.
2. CONTROLLING DIMENSION: MILLIMETER.
3. DIMENSION D DOES NOT INCLIDE MOLD FLASH, PROTRUSIONS OR GATE BURRS. MOLD FLASH OR GATE BURRS SHALL NOT EXCEED 0.15 PER SIDE.
4. DIMENSION E1 DOES NOT INCLUDE INTERLEAD FLASH OR PROTRUSION. INTERLEAD FLASH OR PROTRUSION SHALL NOT EXCEED 0.25 PER SIDE.
5. DIMENSION b DOES NOT INCLUDE DAMBAR PROTRUSION. ALLOWABLE DAMBAR PROTRUSION SHALL BE 0.08 TOTAL IN EXCESS OF THE b DIMENSION AT MAXIMUM MATERIAL CONDITION.
6. TERMINAL NUMBERS ARE SHOWN FOR REFERENCE ONLY.

GENERIC MARKING DIAGRAM*

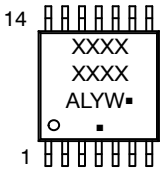

A = Assembly Location
L = Wafer Lot
Y = Year
W = Work Week
▪ = Pb−Free Package
(Note: Microdot may be in either location)

*This information is generic. Please refer to device data sheet for actual part marking. Pb−Free indicator, "G" or microdot "▪", may or may not be present. Some products may not follow the Generic Marking.

DOCUMENT NUMBER:	98ASH70246A	Electronic versions are uncontrolled except when accessed directly from the Document Repository. Printed versions are uncontrolled except when stamped "CONTROLLED COPY" in red.	
DESCRIPTION:	TSSOP−14 5.00x4.40x0.95, 0.65P		PAGE 1 OF 1

onsemi and onsemi are trademarks of Semiconductor Components Industries, LLC dba **onsemi** or its subsidiaries in the United States and/or other countries. **onsemi** reserves the right to make changes without further notice to any products herein. **onsemi** makes no warranty, representation or guarantee regarding the suitability of its products for any particular purpose, nor does **onsemi** assume any liability arising out of the application or use of any product or circuit, and specifically disclaims any and all liability, including without limitation special, consequential or incidental damages. **onsemi** does not convey any license under its patent rights nor the rights of others.

onsemi, onsemi, and other names, marks, and brands are registered and/or common law trademarks of Semiconductor Components Industries, LLC dba "**onsemi**" or its affiliates and/or subsidiaries in the United States and/or other countries. **onsemi** owns the rights to a number of patents, trademarks, copyrights, trade secrets, and other intellectual property. A listing of **onsemi**'s product/patent coverage may be accessed at www.onsemi.com/site/pdf/Patent−Marking.pdf. **onsemi** reserves the right to make changes at any time to any products or information herein, without notice. The information herein is provided "as−is" and **onsemi** makes no warranty, representation or guarantee regarding the accuracy of the information, product features, availability, functionality, or suitability of its products for any particular purpose, nor does **onsemi** assume any liability arising out of the application or use of any product or circuit, and specifically disclaims any and all liability, including without limitation special, consequential or incidental damages. Buyer is responsible for its products and applications using **onsemi** products, including compliance with all laws, regulations and safety requirements or standards, regardless of any support or applications information provided by **onsemi**. "Typical" parameters which may be provided in **onsemi** data sheets and/or specifications can and do vary in different applications and actual performance may vary over time. All operating parameters, including "Typicals" must be validated for each customer application by customer's technical experts. **onsemi** does not convey any license under any of its intellectual property rights nor the rights of others. **onsemi** products are not designed, intended, or authorized for use as a critical component in life support systems or any FDA Class 3 medical devices or medical devices with a same or similar classification in a foreign jurisdiction or any devices intended for implantation in the human body. Should Buyer purchase or use **onsemi** products for any such unintended or unauthorized application, Buyer shall indemnify and hold **onsemi** and its officers, employees, subsidiaries, affiliates, and distributors harmless against all claims, costs, damages, and expenses, and reasonable attorney fees arising out of, directly or indirectly, any claim of personal injury or death associated with such unintended or unauthorized use, even if such claim alleges that **onsemi** was negligent regarding the design or manufacture of the part. **onsemi** is an Equal Opportunity/Affirmative Action Employer. This literature is subject to all applicable copyright laws and is not for resale in any manner.

ADDITIONAL INFORMATION

TECHNICAL PUBLICATIONS:
Technical Library: www.onsemi.com/design/resources/technical−documentation
onsemi Website: www.onsemi.com

ONLINE SUPPORT: www.onsemi.com/support
For additional information, please contact your local Sales Representative at
www.onsemi.com/support/sales