Click here to ask about the production status of specific part numbers.

MAX33011E/12E/14E/15E +5V, 5Mbps CAN Transceiver with ±65V Fault Protection, Fault Detection and Reporting, ±25V CMR, and ±45kV ESD Protection

General Description

The MAX33011E/MAX33012E, and MAX33014E/MAX33015E are a family of +5V control area network (CAN) transceivers with integrated protection for industrial applications. These devices have extended ±65V fault protection on the CAN bus for equipment where overvoltage protection is required. The CAN family also incorporates high ±45kV ESD HBM protection and an input common-mode range (CMR) of ±25V, exceeding the ISO 11898 specification of -2V to +7V, and well suited for applications where ground planes from different systems are shifting relative to each other.

This CAN family incorporates a fault-detection feature where it monitors the CANH and CANL line for faults like overcurrent, overvoltage, and transmission failure. When a fault is detected, the FAULT pin goes high, which triggers an external interrupt with the local CAN controller, and the driver and receiver lines are placed in recessive mode. The system clock then drives the TXD pin and a fault code is transmitted through the RXD line back to the controller. When the specific fault code is transmitted and the system is programmed to alert local service personnel, they are able to troubleshoot and debug the problem quicker, providing valuable diagnostics and decreased equipment downtime. In addition, the family features a variety of options to address common CAN application requirements: low-current standby mode, slow slew rate for improved EMI performance, silent-mode to disable the transmitter, low level translation to interface with low-voltage controllers, and loopback mode for remote self diagnostics.

These devices are specified for data rates up to 5Mbps. The transceivers include a dominant timeout to prevent bus lockup caused by controller error or by a fault on the TXD input. When TXD remains in the dominant state (low) for longer than t_{DOM}, the driver is switched to the recessive state, releasing the bus.

The MAX33011E/MAX33012E are in a standard 8-pin SOIC package and the MAX33014E/MAX33015E are in a 10-pin TDFN-EP package. This family of devices operates over the -40°C to +125°C temperature range.

Applications

- Industrial Automation
- Building Automation
- Vending Machines
- Security Systems
- Heavy Equipment/Machinery

Benefits and Features

- Integrated Protection Increases Robustness
  - ±65V Fault-Tolerant CANH and CANL
  - ±45kV ESD HBM (Human Body Model)
  - ±30kV IEC Air-Gap and ±12kV IEC Contact
  - ±25V Extended Common-Mode Input Range (CMR)
  - Transmitter Dominant Timeout Prevents Lockup
  - Short-Circuit Protection Limits Driver Current
  - Thermal Shutdown
- Family Provides Flexible Design Options
  - 1.62V to 5.5V Logic-Supply (V_L) Range (MAX33014E and MAX33015E)
  - Silent Mode S Disables Transmitter (MAX33011E and MAX33015E)
  - STBY Input for Low-Current, Slow Slew Rate, and Normal Mode (MAX33012E and MAX33014E)
  - LPBK Enables Remote Diagnostics (MAX33014E and MAX33015E)
- Fault Detection and Reporting
  - Detects Overcurrent, Overvoltage, and Transmission Failure
  - Error Code Reporting Through RXD
- Operating Temperature Range of -40°C to +125°C

***Ordering Information* appears at end of data sheet.**

19-100701; Rev 2; 2/21

Simplified Block Diagram

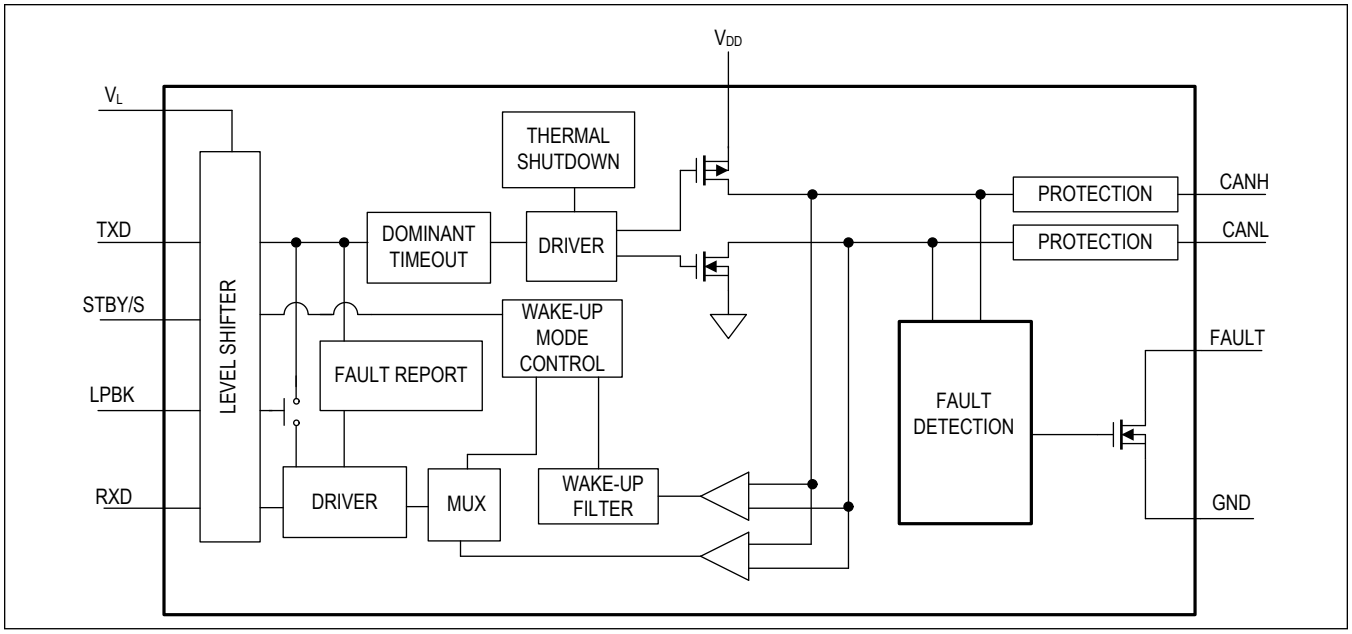

Absolute Maximum Ratings

V_{DD} ..... -0.3V to +6V
CANH or CANL (Continuous) ..... -65V to +65V
TXD, RXD, STBY, S, LPBK, FAULT ..... -0.3V to +6V
V_L MAX33014E/15E ..... -0.3V to (V_{DD} + 0.5V)
Short-Circuit Duration ..... Continuous
Continuous Power Dissipation
8 SO Single-Layer Board (T_A = +70°C, derate 5.9mW/°C above +70°C.) 470.6mW
8 SO Multilayer Board (T_A = +70°C, derate 7.6mW/°C above +70°C.) 606.1mW
10 TDFN Single-Layer Board (T_A = +70°C, derate 18.5mW/°C above +70°C.) 1481.5mW
10 TDFN Multilayer Board (T_A = +70°C, derate 24.4mW/°C above +70°C.) 1951.2mW
Operating Temperature Range ..... -40°C to +125°C
Junction Temperature ..... +150°C
Storage Temperature Range ..... -60°C to +150°C
Soldering Temperature (reflow) ..... +260°C
Lead Temperature (soldering, 10sec) ..... +300°C

Note 1: All voltages are referenced to GND, unless otherwise noted.

Note 2: Package thermal resistances were obtained using the method described in JEDEC specification JEDSD51-7, using a four-layer board. For detailed information on package thermal considerations, refer to www.maximintegrated.com/thermal-tutorial.

Stresses beyond those listed under "Absolute Maximum Ratings" may cause permanent damage to the device. These are stress ratings only, and functional operation of the device at these or any other conditions beyond those indicated in the operational sections of the specifications is not implied. Exposure to absolute maximum rating conditions for extended periods may affect device reliability.

Package Information

8 SOIC

Package Code	S8+4
Outline Number	21-0041
Land Pattern Number	90-0096
Thermal Resistance, Single-Layer Board:	
Junction to Ambient (θ_{JA})	170°C/W
Junction to Case (θ_{JC})	40°C/W
Thermal Resistance, Four-Layer Board:	
Junction to Ambient (θ_{JA})	132°C/W
Junction to Case (θ_{JC})	38°C/W

10 TDFN

Package Code	T1034N+1
Outline Number	21-0268
Land Pattern Number	90-0247
Thermal Resistance, Single-Layer Board:	
Junction to Ambient (θ_{JA})	54°C/W
Junction to Case (θ_{JC})	9°C/W
Thermal Resistance, Four-Layer Board:	
Junction to Ambient (θ_{JA})	41°C/W
Junction to Case (θ_{JC})	9°C/W

For the latest package outline information and land patterns (footprints), go to *www.maximintegrated.com/packages*. Note that a "+", "#", or "-" in the package code indicates RoHS status only. Package drawings may show a different suffix character, but the drawing pertains to the package regardless of RoHS status.

Package thermal resistances were obtained using the method described in JEDEC specification JESD51-7, using a four-layer board. For detailed information on package thermal considerations, refer to *www.maximintegrated.com/thermal-tutorial*.

Electrical Characteristics

(V_{DD} = 4.5V to 5.5V, V_L = 1.62V to V_{DD}, R_L = 60Ω, C_L = 15pF, T_A = T_{MIN} to T_{MAX}, unless otherwise specified. Typical values are at V_{DD} = 5V, V_L = 3.3V (MAX33014E/MAX33015E), and T_A = +25°C, unless otherwise specified. (*Note 1*), Limits are 100% tested at T_A = +25°C. Limits over the operating temperature range and relevant supply voltage range are guaranteed by design and characterization. Specifications marked "GBD" are guaranteed by design and not production tested.)

PARAMETER	SYMBOL	CONDITIONS		MIN	TYP	MAX	UNITS
POWER							
Supply Voltage	V_{DD}			4.5		5.5	V
Logic Supply Voltage	V_L	MAX33014E/MAX33015E		1.62		V_{DD}	V
Dominant Supply Current	I_{DD_DOM}	TXD = 0V	No load		5	8	mA
			R_L = 60Ω		50	70	
Recessive Supply Current	I_{DD_REC}	V_{DD} = 5V, TXD = V_L	No load		4		mA
			CANH shorted to CANL		4		
Standby Supply Current	I_{STBY}	STBY = V_L, no external pullup resistor on FAULT pin			60		µA
Silent Mode Supply Current	I_S	S = V_L			3		mA
Logic Supply Current	I_L	RXD = open	V_L = 5V		60		µA
			V_L = 3.3V		40		
			V_L = 1.8V		22		
UVLO Threshold Rising	V_{UVLO_R}	V_{DD} rising				4.25	V
UVLO Threshold Falling	V_{UVLO_F}	V_{DD} falling		3.45			V
PROTECTION							
ESD CANH and CANL		HBM	JEDEC JS-001, *Note 3*		±45		kV
		Air Gap	IEC 61000-4-2		±30		
		Contact	IEC 61000-4-2		±12		
ESD Other Pins	ESD_{ALL}	HBM	JEDEC JS-001, *Note 3*		±4		kV
Fault Protection Range	V_{FP}	CANH or CANL to GND		-65		+65	V
Thermal Shutdown	T_{SHDN}				+160		°C
Thermal Shutdown Hysteresis	T_{HYST}				+20		°C
LOGIC INTERFACE (RXD, TXD, LPBK)							
Input High Voltage	V_{IH}			0.7 x V_L			V
Input Low Voltage	V_{IL}	2.25V ≤ V_L ≤ 5.5V				0.8	V
		1.62V ≤ V_L ≤ 2.25V				0.6	
TXD Input Pullup Resistance	R_{PU_TXD}			100		250	kΩ
STBY, S Input Pullup Resistance/LPBK Pulldown Resistance	R_{PU_S}			100		250	kΩ
Output High Voltage (RXD)	V_{OH}	Sourcing 4mA		V_L - 0.4			V

Electrical Characteristics (continued)

(V_{DD} = 4.5V to 5.5V, V_L = 1.62V to V_{DD}, R_L = 60Ω, C_L = 15pF, T_A = T_{MIN} to T_{MAX}, unless otherwise specified. Typical values are at V_{DD} = 5V, V_L = 3.3V (MAX33014E/MAX33015E), and T_A = +25°C, unless otherwise specified. (*Note 1*), Limits are 100% tested at T_A = +25°C. Limits over the operating temperature range and relevant supply voltage range are guaranteed by design and characterization. Specifications marked "GBD" are guaranteed by design and not production tested.)

PARAMETER	SYMBOL	CONDITIONS		MIN	TYP	MAX	UNITS
Output Low Voltage (RXD)	V_{OL}	Sinking 4mA				0.4	V
CAN BUS DRIVER							
Bus Output Voltage (Dominant)	V_{O_DOM}	t < t_{DOM}, TXD = 0V, R_L = 60Ω	CANH	2.75		4.5	V
			CANL	0.5		2.25	
Bus Output Voltage (Recessive)	V_{O_REC}	TXD = V_L, no load		2		3	V
Bus Output Differential Voltage (Dominant)	V_{OD_DOM}	TXD = 0V, R_L = 60Ω	-5V ≤ V_{CM} ≤ 10V, R_{CM} = 156Ω, Figure 1	1.5		3	V
			R_{CM} = open	1.5		3	
Bus Output Differential Voltage (Recessive)	V_{OD_REC}	TXD = V_L	R_L = 60Ω	-120		+12	mV
			No load	-500		+50	
Bus Output Voltage Standby	V_{O_STBY}	TXD = STBY = V_L	No load	70		160	mV
High-Side Short-Circuit Current	I_{SC_CANH}	TXD = CANH = 0V			175	250	mA
Low-Side Short-Circuit Current	I_{SC_CANL}	TXD = 0V, CANL = V_{DD}			175	250	mA
RECEIVER							
Common-Mode Input Range	V_{CM}	CANH or CANL to GND, RXD output valid		-25		+25	V
Common-Mode Input Range Standby Mode	V_{CM_STBY}	CANH or CANL to GND, RXD output valid		-12		+12	V
Input Differential Threshold Voltage (Dominant)	V_{ID_DOM}	-25V ≤ V_{CM} ≤ +25V, TXD = V_L				0.9	V
Input Differential Threshold Voltage (Recessive)	V_{ID_REC}	-25V ≤ V_{CM} ≤ +25V, TXD = V_L		0.5			V
Standby Input Differential Threshold Voltage (Dominant)	V_{ID_SDOM}	-12V ≤ V_{CM} ≤ +12V, TXD = V_L				1.15	V
Standby Input Differential Threshold Voltage (Recessive)	V_{ID_SREC}	-12V ≤ V_{CM} ≤ +12V, TXD = V_L		0.45			V
Input Differential Hysteresis	V_{ID_HYS}	-25V ≤ V_{CM} ≤ +25V			100		mV
Input Resistance	R_{IN}	TXD = V_L		10		50	kΩ
Differential Input Resistance	R_{IN_DIFF}	TXD = V_L		20		100	kΩ

Electrical Characteristics (continued)

(V_{DD} = 4.5V to 5.5V, V_L = 1.62V to V_{DD}, R_L = 60Ω, C_L = 15pF, T_A = T_{MIN} to T_{MAX}, unless otherwise specified. Typical values are at V_{DD} = 5V, V_L = 3.3V (MAX33014E/MAX33015E), and T_A = +25°C, unless otherwise specified. (*Note 1*), Limits are 100% tested at T_A = +25°C. Limits over the operating temperature range and relevant supply voltage range are guaranteed by design and characterization. Specifications marked "GBD" are guaranteed by design and not production tested.)

PARAMETER	SYMBOL	CONDITIONS		MIN	TYP	MAX	UNITS
Input Capacitance	C_{IN}	TXD = V_L (*Note 2*)			22	39	pF
Differential Input Capacitance	C_{IN_DIFF}	TXD = V_L (*Note 2*)			12	22	pF
Input Leakage Current	I_{LKG}	V_{DD} = V_L = 0V	CANH = CANL = V_{DD}		150	280	µA
SWITCHING							
Data Rate		R_L = 60Ω, C_{LD} = 100pF, R_{CM} is open, Figure 1			5		Mbps
Driver Rise Time	t_R	R_L = 60Ω, C_{LD} = 100pF, R_{CM} is open, Figure 1			10		ns
Driver Fall Time	t_F	R_L = 60Ω, C_{LD} = 100pF, R_{CM} is open, Figure 1			14		ns
Slow Slew Driver Rise Time	t_{SSR}	R_L = 60Ω, C_{LD} = 100pF, R_{CM} is open, Figure 1			160		ns
Slow Slew Driver Fall Time	t_{SSF}	R_L = 60Ω, C_{LD} = 100pF, R_{CM} is open, Figure 1			130		ns
TXD to RXD Loop Delay	t_{LOOP}	R_L = 60Ω, Dominant to Recessive and Recessive to Dominant, Figure 2			60	100	ns
TXD Propagation Delay (Recessive to Dominant)	t_{ONTXD}	R_L = 60Ω, C_{LD} = 100pF, RCM is open, Figure 1			30	50	ns
TXD Propagation Delay (Dominant to Recessive)	t_{OFFTXD}	R_L = 60Ω, C_{LD} = 100pF, RCM is open, Figure 1			25	50	ns
RXD Propagation Delay (Recessive to Dominant)	t_{ONRXD}	C_L = 15pF, Figure 3			25	70	ns
RXD Propagation Delay (Dominant to Recessive)	t_{OFFRXD}	C_L = 15pF, Figure 3			30	70	ns
TXD-Dominant TimeOut	t_{DOM}	Figure 4		1.3		4.3	ms
Wake-Up Time	t_{WAKE}	Figure 5			2.2		µs
Fault Interrupt on Delay (Overcurrent, Overvoltage, Transmission Failure)	t_{FAULT_LH}	100kΩ pullup resistor to V_{DD}, 2.5MHz signal on TXD, Figure 6	Overcurrent and overvoltage		4		µs
			Transmission failure		8		
Loopback Delay from Transmitter Input to Receiver Output	t_{LPBK}	MAX33014E/MAX33015E			15		ns
Standby to Normal Mode Delay	t_{STBY_NORM}				20		µs
Normal to Standby Mode Delay	t_{NORM_STBY}				40		µs
Standby Propagation Delay	t_{PLH_STBY}	C_L = 15pF, Figure 5			300		ns

Note 1: All units are 100% production tested at T_A = +25°C. Specifications over temperature are guaranteed by design.
Note 2: Not production tested. Guaranteed at T_A = +25°C.
Note 3: Tested at the limits of test equipment.

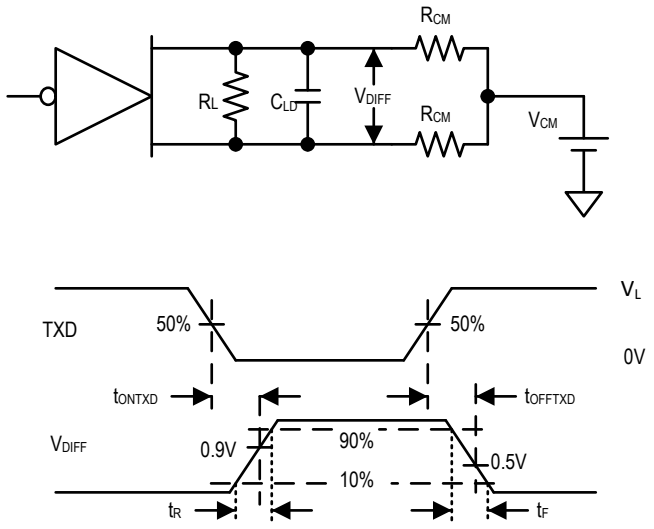

Figure 1. Transmitter Test Circuit and Timing Diagram

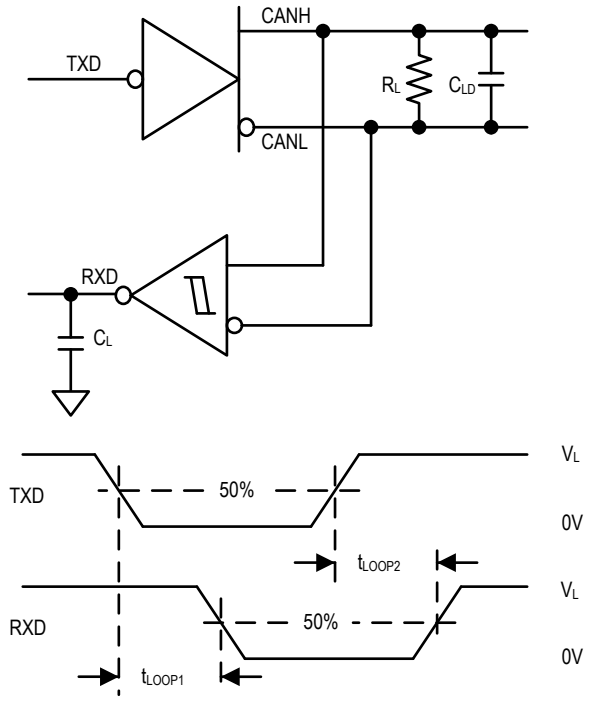

Figure 2. TXD to RXD Loop Delay

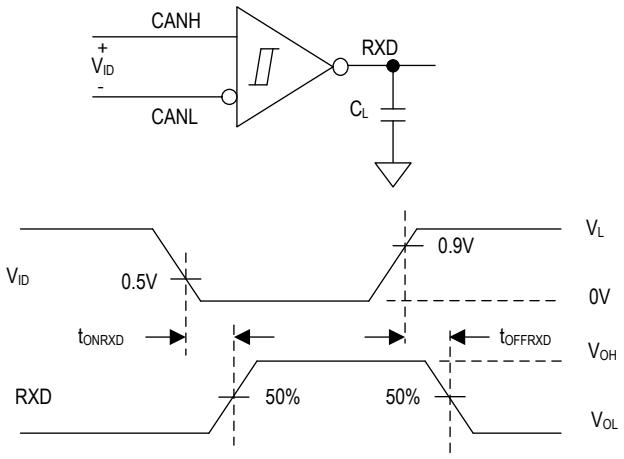

Figure 3. RXD Timing Diagram

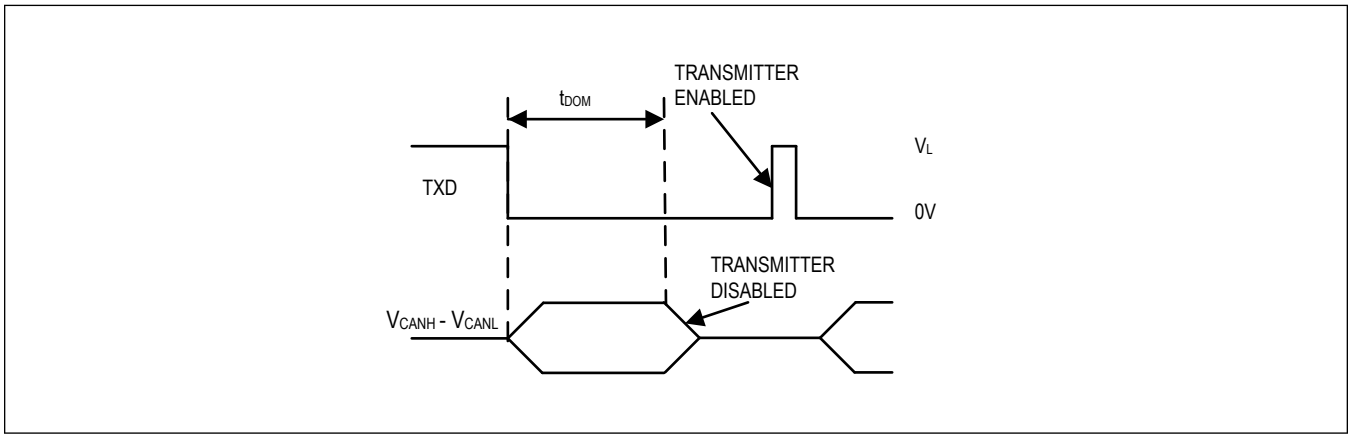

Figure 4. Transmitting Dominant Timeout Timing Diagram

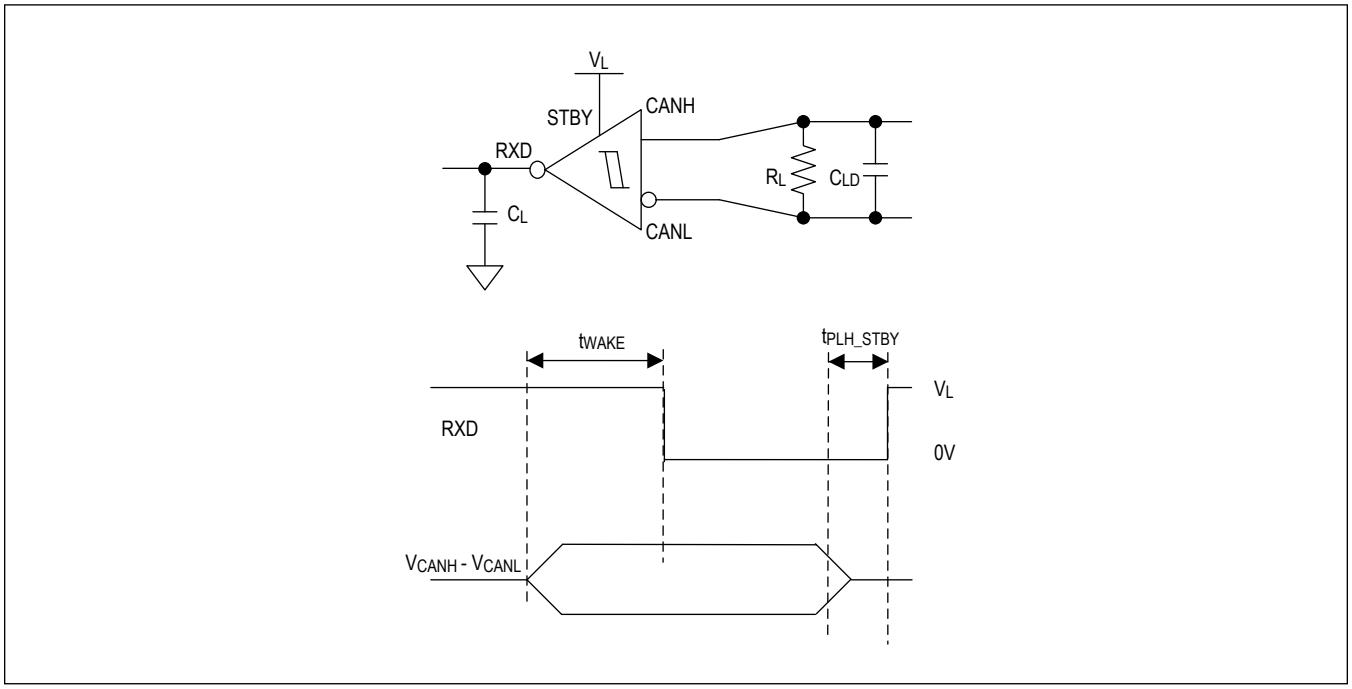

Figure 5. Standby Receiver Propagation Delay

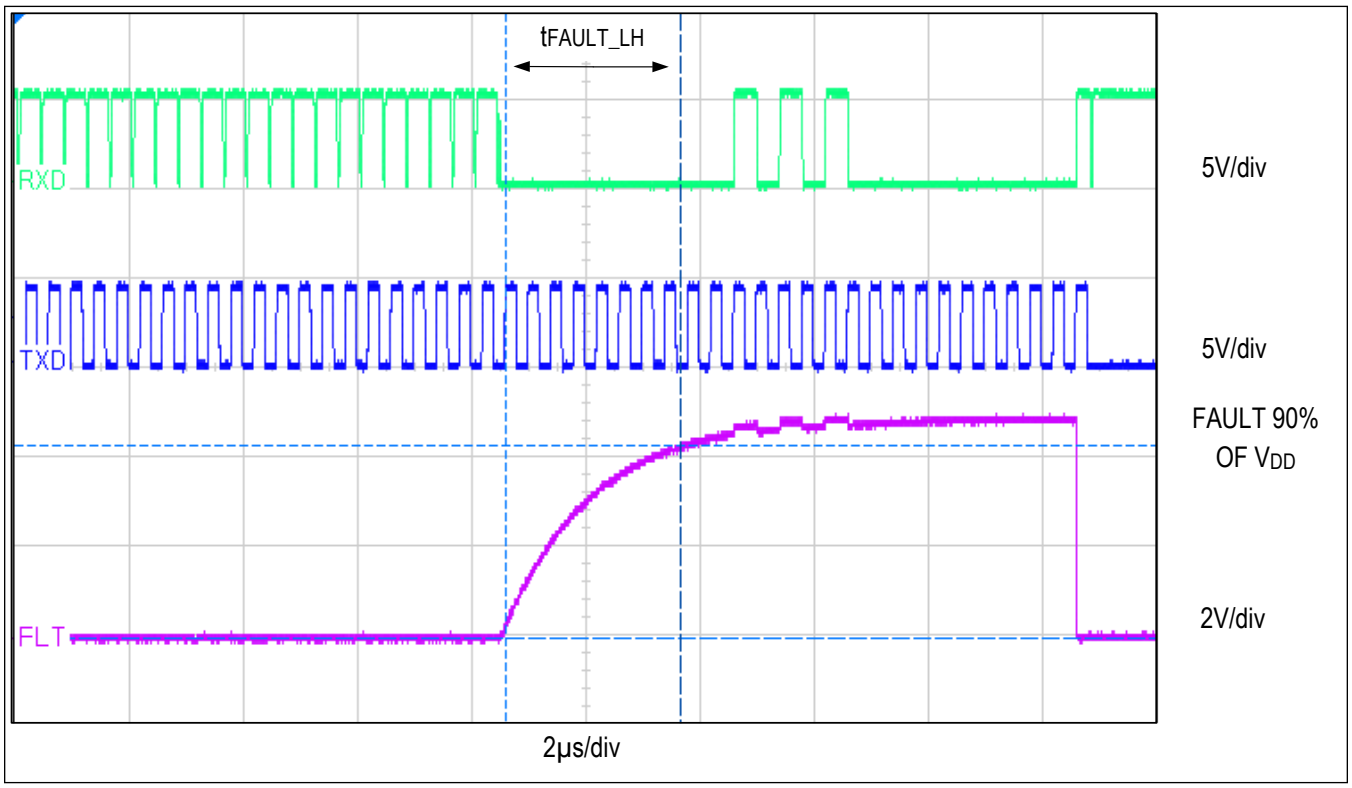

Figure 6. FAULT Propagation Delay from Low to High

Typical Operating Characteristics

(V_{DD} = 5V, V_L = 3.3V, R_L = 60Ω, C_L = 15pF, T_A = +25°C, unless otherwise noted.)

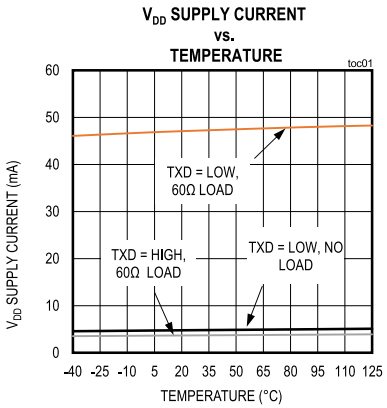

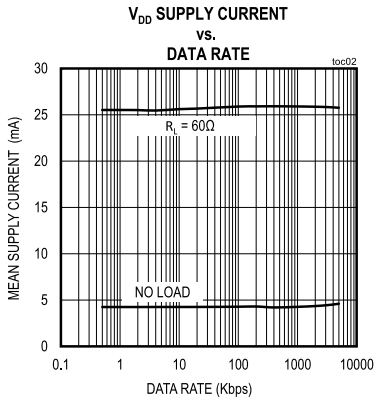

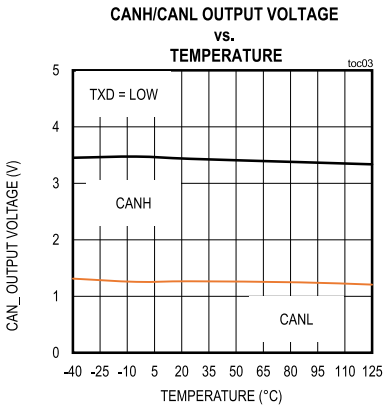

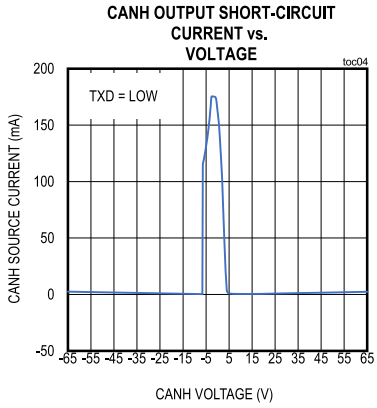

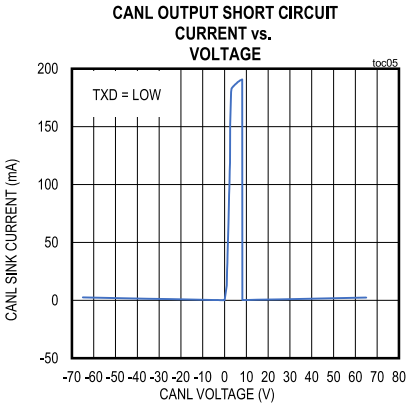

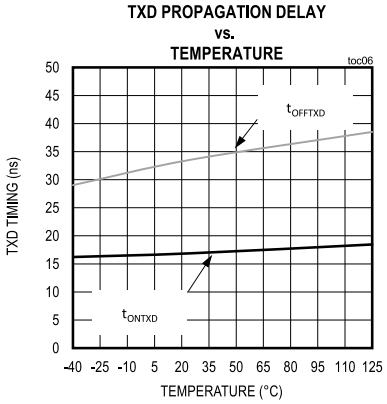

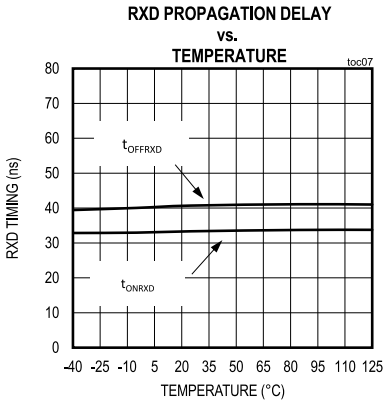

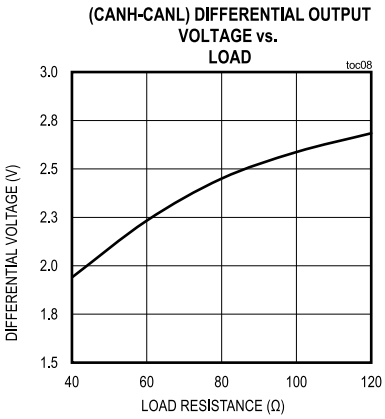

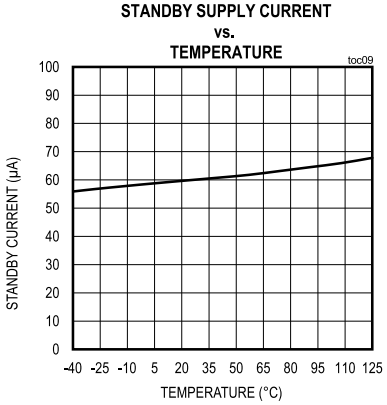

Typical Operating Characteristics (continued)

(V_{DD} = 5V, V_L = 3.3V, R_L = 60Ω, C_L = 15pF, T_A = +25°C, unless otherwise noted.)

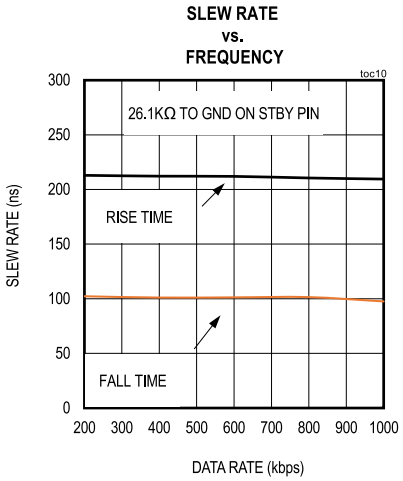

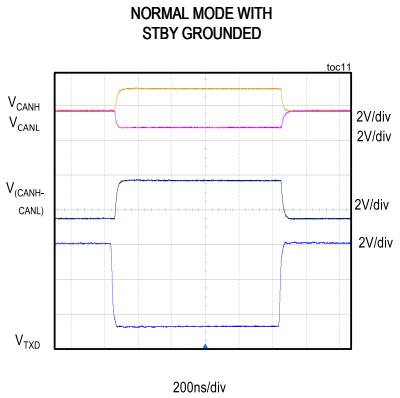

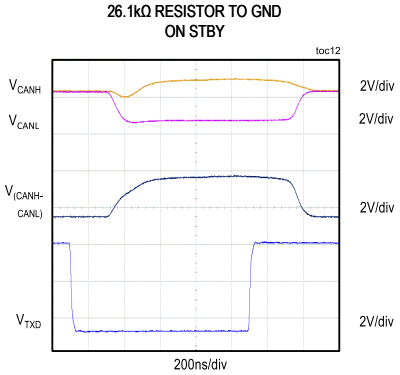

Pin Configurations

MAX33011E

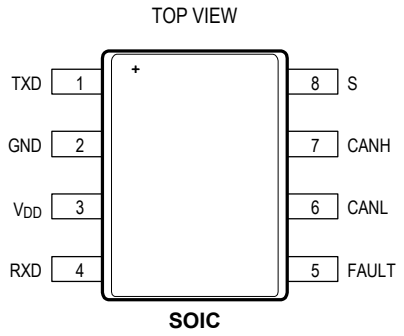

MAX33012E

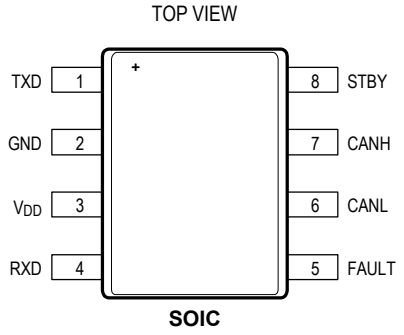

MAX33014E

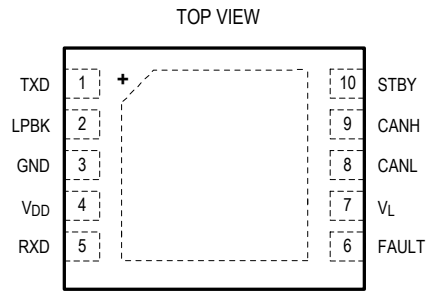

TDFN-EP
3mm x 4mm

MAX33015E

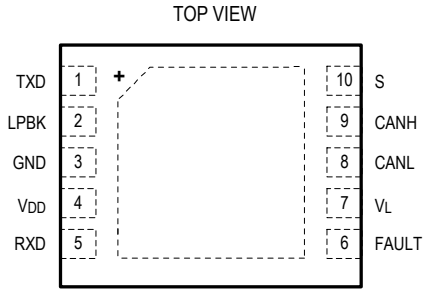

TDFN-EP
3mm x 4mm

Pin Description

PIN				NAME	FUNCTION
MAX33011E	MAX33012E	MAX33014E	MAX33015E		
1	1	1	1	TXD	Transmit Data Input. TXD is a CMOS/TTL compatible input from a CAN controller with an internal pullup to V_{DD}.
—	—	2	2	LPBK	Loopback Mode. When connected to logic-high, the transmitter and receiver are placed in a high-impedance state. Internally, the TXD line drives directly to the RXD line for loopback that can be used for self-diagnostic of the transceiver without disturbing the bus. When loopback mode is not used, connect to GND or leave floating.
2	2	3	3	GND	Ground
3	3	4	4	VDD	Supply Voltage. Bypass V_{DD} to GND with a 0.1µF capacitor.

Pin Description (continued)

PIN				NAME	FUNCTION
MAX33011E	MAX33012E	MAX33014E	MAX33015E		
4	4	5	5	RXD	Receive Data Output. RXD is a CMOS/TTL compatible output from the physical bus lines CANH and CANL.
5	5	6	6	FAULT	Fault Detected Indication. Stays low when fault is not detected. Release to high if an overcurrent, overvoltage, or transmission failure is detected.
—	—	7	7	VL	Logic Supply Input. V_L is the logic supply voltage for the input/output between the CAN transceiver and controller. V_L allows full compatibility from +1.62V to +5.5V logic on all digital lines. Bypass to GND with a 0.1µF capacitor. Connect V_L to V_{DD} for 5V logic compatibility.
6	6	8	8	CANL	CAN Bus Line Low
7	7	9	9	CANH	CAN Bus Line High
8	—	—	10	S	Silent Mode Input. Drive S low to enable TXD and to operate in normal mode. Drive S high to disable the transmitter. A 26.1kΩ external resistor can be used to connect the S pin to ground for slow slew mode.
—	8	10	—	STBY	Standby Mode Input. A logic-high on STBY pin selects the standby mode. In standby mode, the transmitter is disabled, and the receiver is in low-power mode. A logic-low on STBY pin puts the transceiver in normal operating mode. A 26.1kΩ external resistor can be used to connect the STBY pin to ground for slow slew mode.

Detailed Description

The MAX33011E/MAX33012E and MAX33014E/MAX33015E are a family of fault-protected CAN transceivers with fault detection and fault reporting. They are designed for applications where expeditious troubleshooting is important to increase the up time of important control systems, addressing common faults like overcurrent, overvoltage, and transmission failure. These devices are ideal for harsh industrial applications with a number of integrated robust protection feature set that improve the reliability of end equipment. These devices provide a link between the CAN protocol controller and the physical wires of the bus lines in a CAN. They can be used for DeviceNet™, CAN Kingdom, and CANOpen™ applications as well.

All CAN transceivers in the family are fault protected up to ±65V, making them suitable for applications where overvoltage protection is required. These devices are rated up to a high ±45kV ESD of human body model (HBM), suitable for protection during the manufacturing process, and even in the field where there is a human interface for installation and maintenance. In addition, a common-mode voltage range of ±25V enables communication in noisy environments where there are ground plane differences between different systems due to the close proximity of heavy equipment machinery or operation from different transformers. Dominant timeout prevents the bus from being blocked by a hung-up microcontroller, and the outputs CANH and CANL are short-circuit current-limited and protected against excessive power dissipation by thermal shutdown circuitry that places the driver outputs in a high-impedance state.

The MAX33011E/MAX33012E and MAX33014E/MAX33015E can operate up to 5Mbps. This family has the option to slow the slew rate to 8V/µs to minimize EMI, enabling the use of unshielded-twisted or parallel cable. The MAX33011E/MAX33012E are packaged in an industry-standard 8-pin SO, while the MAX33014E/MAX33015E are packaged in a 10-pin TDFN. This family of robust CAN transceivers has an operating temperature from -40°C to +125°C.

±65V Fault Protection

These devices feature ±65V of fault protection. The CANH and CANL data lines are capable of withstanding a short from -65V to +65V. This extended overvoltage range makes it suitable for applications where accidental shorts to power supply lines are possible due to human intervention.

Transmitter

The transmitter converts a single-ended input signal (TXD) from the local CAN controller to differential outputs for the bus lines CANH and CANL. The truth table for the transmitter and receiver is provided in Table 1.

Table 1. Transmitter and Receiver Truth Table (When Not Connected to the Bus)

STBY	TXD	TXD LOW TIME	CANH	CANL	BUS STATE	RXD
LOW	LOW	< t_{DOM}	HIGH	LOW	DOMINANT	LOW
LOW	LOW	> t_{DOM}	$V_{DD}/2$	$V_{DD}/2$	RECESSIVE	HIGH
LOW	HIGH	X	$V_{DD}/2$	$V_{DD}/2$	RECESSIVE	HIGH

X = Don't care

Transmitter Output Protection

This family of CAN transceivers protects the transmitter output stage against a short-circuit to a positive or negative voltage by limiting the driver current. See the CANH and CANL short-circuit current TOC graphs. Thermal shutdown further protects the devices from excessive temperatures that may result from a short. The transmitter returns to normal operation once the short is removed.

Transmitter-Dominant Timeout

These devices feature a transmitter-dominant timeout (t_{DOM}) that prevents erroneous CAN controllers from clamping the bus to a dominant level by maintaining a continuous low TXD signal. When TXD remains in the dominant state (low) for greater than t_{DOM}, the transmitter is disabled, releasing the bus to a recessive state (Figure 4). After a dominant timeout fault, the transmitter is re-enabled when receiving a rising edge at TXD. The transmitter-dominant timeout limits the minimum possible data rate to 9kbps for standard CAN protocol.

Receiver

The receiver reads the differential input from the bus line CANH and CANL and transfers this data as a single-ended output RXD to the CAN controller. It consists of a comparator that senses the difference V_{DIFF} = (CANH-CANL), with respect to an internal threshold of 0.7V. If V_{DIFF} > 0.9V, a logic-low is present on RXD. If V_{DIFF} < 0.5V, a logic-high is present. The CANH and CANL common-mode range is ±25V in normal mode and ±12V in standby mode. RXD is a logic-high when CANH and CANL are shorted or terminated and undriven.

Fault Detection and Reporting

This family of devices has fault detection for overcurrent, overvoltage, and transmission failure in normal mode operation. The detection of faults and reporting them out to the local CAN controller provide additional information that benefits the troubleshooting of a given problem in a CAN bus system, reducing down time, improving equipment efficiencies, and keeping service costs down.

To enable fault detection upon power-up, 100 low-to-high transitions need to pass through TXD, which is typically 1 or 2 CAN frame messages depending on data payload size (classic or extended format) and which protocol is used. Fault detection is not enabled in standby and silent mode. After the 100 low-to-high transitions on TXD, if a fault is detected, then another 16 low-to-high transitions on TXD are required to shift out the fault code shown in Table 2. In addition, 10 more pulses are needed to clear the fault.

Table 2. Fault Detection and Reporting

FAULT	CONDITION (FAULT DETECTION ENABLED)	FAULT CODE	POSSIBLE CAUSE
Overcurrent	>85mA	101010	• CANH shorted to CANL • CANH connected to GND and CANL connected to V_{DD}
Overvoltage	CANH > +29V or CANL < -29V	101100	• CMR fault
Transmission Failure	RXD unchanged for 10 consecutive pulses, recommended minimum frequency = 200kHz	110010	• Open load (both termination resistors missing) on CANH and CANL • Exceeds driver's common-mode range • CANH and/or CANL connected to a fixed voltage source

Overvoltage Detection

Overvoltage detection is triggered when CANH is above approximately +29V or CANL is below approximately -29V. This indicates that the CAN bus has likely violated the CMR range or that a short fault on CANH and/or CANL has occurred and is beyond the ±29V threshold. Once overvoltage detection is triggered, the FAULT pin transitions from low to high and the fault code is clocked out of RXD through TXD.

Overcurrent Detection

Overcurrent detection is triggered when there is a high current path from V_{DD} to GND through a short from CANH to CANL. In addition, shorts far away from the CAN node may not be detected due to high cable impedance. See Figure 7 for overcurrent detection maximum operating frequency versus cable length as a reference. A Cat5e copper-clad aluminum cable is used. The maximum frequency will vary with the type of cable.

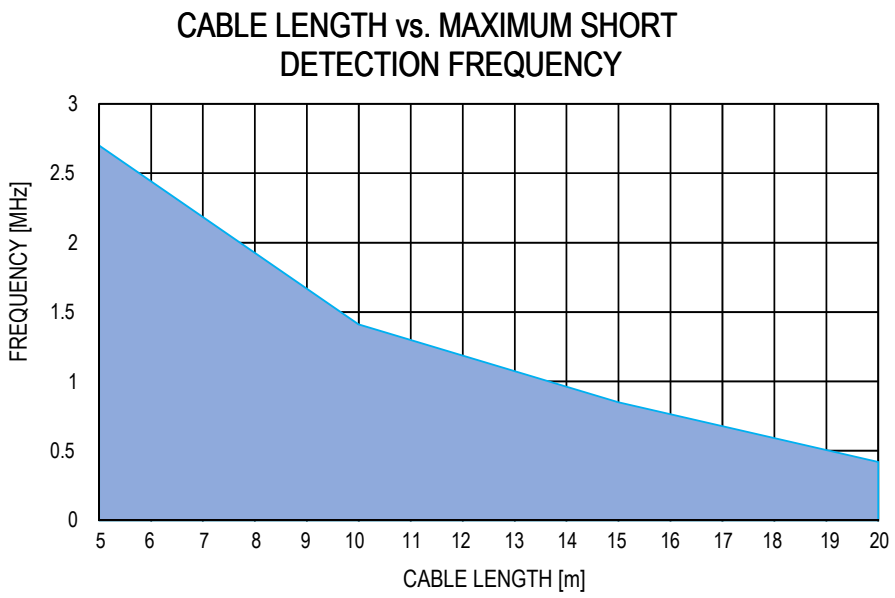

Figure 7. Overcurrent Detection Operating Frequency vs. Cable Length

Transmission Failure Detection

Transmission failure detection is triggered when the signal on RXD does not match TXD for 10 consecutive cycles after fault detection is enabled. This can occur when both termination resistors are missing. Other scenarios include, but are not limited to, shorting CANH to GND or CANL to V_{DD} resulting in the differential signal not meeting the receiver's V_{IH} and V_{IL} specification.

Fault Reporting

When a fault occurs and the FAULT pin goes high, the CANH and CANL lines are placed in high impedance, and a 6-bit fault code of the first detected fault condition is stored in an internal register. 16 low-to-high transitions need to go through TXD to shift the fault code out through RXD.

An overcurrent fault timing diagram is shown in Figure 8.

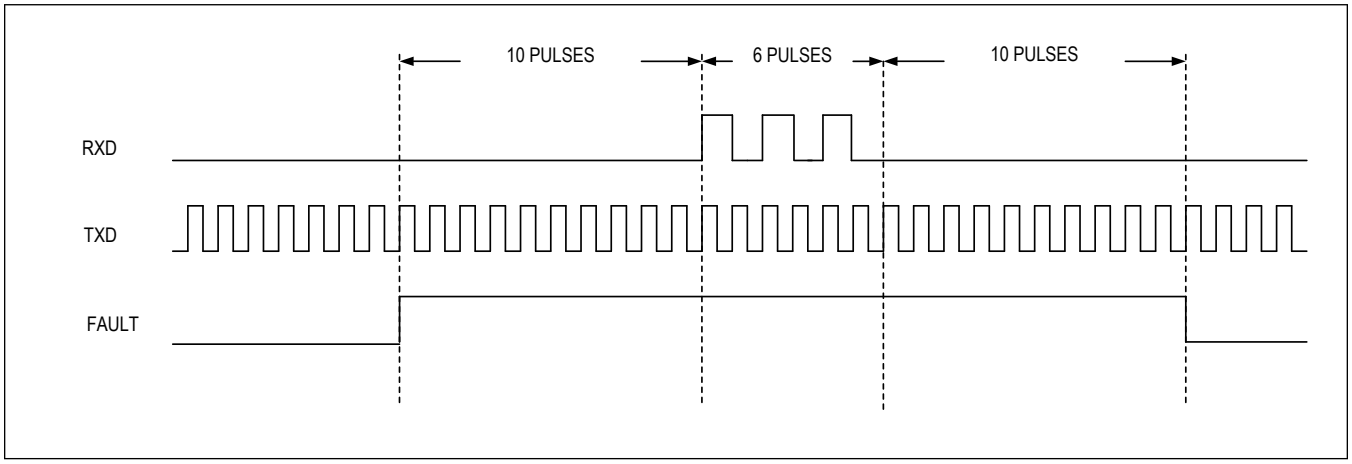

Figure 8. Overcurrent Fault Reporting Timing Diagram

Fault Clear

The fault condition can be cleared only after the 6-bit fault code is reported through the RXD pin of the chip. Soon after the fault code is reported, send 10 clock pulses through the TXD pin, which deasserts the FAULT pin. The FAULT pin cannot be cleared in standby or silent mode. Fault detection is disabled after fault is cleared and another 100 low-to-high transitions are required on TXD to re-enable fault detection.

Standby Mode (MAX33012E, MAX33014E)

Drive the STBY pin high for standby mode, which switches the transmitter off and the receiver to a low current and low-speed state. The supply current is reduced to 60µA during standby mode. The bus line is monitored by a low differential comparator to detect and recognize a wakeup event on the bus line. Once the comparator detects a dominant bus level longer than t_{WAKE}, RXD is pulled low. Drive the STBY pin low for normal operation. Fault detection is disabled in standby mode.

Slow Slew Rate Mode

Connect a 26.1kΩ resistor between ground and the STBY/S pin. This will put the device in slow slew rate mode where the typical rising slew rate is 10V/s and the typical falling slew rate is 18V/s, enabling the use of unshielded-twisted or parallel cable, compared with normal mode at 140V/µs falling and 180V/µs rising slew rate. The STBY pin voltage should be between 0.2V to 0.6V to remain in slow slew rate mode. Slow slew rate mode is recommended for transmitter frequencies which have a data rate that is less than 1Mbps.

Silent Mode (MAX33011E, MAX33015E)

Drive S high to place the device in silent mode. This disables the transmitter regardless of the voltage level at TXD. However, RXD is still active and monitors activity on the bus line. Make sure that the FAULT pin is cleared before entering into silent mode. Fault detection is disabled in silent mode.

Loopback Mode (MAX33014E, MAX33015E)

The LPBK pin enables the local CAN controller to perform self-diagnostics. A logic-high to LPBK places the transceiver in a high impedance state to the bus. This allows data to pass internally from the driver to receiver in a loopback test mode without disturbing the bus. When LPBK is connected to the ground, the transceiver operates in normal mode.

Logic Compatibility (MAX33014E, MAX33015E)

A separate input V_L allows the devices to communicate with logic systems down to 1.62V while operating from a +5V supply. This provides a reduced input voltage threshold to the TXD, STBY, S, and LPBK inputs, and provides a logic-high output at RXD that is compatible with the microcontroller's supply rail. The logic compatibility eliminates an external logic level translator and longer propagation delay. Connect V_L to V_{DD} to operate with +5V logic systems.

Applications Information

Reduced EMI and Reflections

In multidrop CAN applications, it is important to maintain a single linear bus of uniform impedance that is properly terminated at each end. A star, ring, or tree configuration should never be used. Any deviation from the end-to-end wiring scheme creates a stub. High-speed data edges on a stub can create reflections back down to the bus. These reflections can cause data errors by eroding the noise margin of the system. Although stubs are unavoidable in a multidrop system, care should be taken to keep these stubs as short as possible, especially when operating with high data rates.

Typical Application Circuit

Multidrop CAN Bus

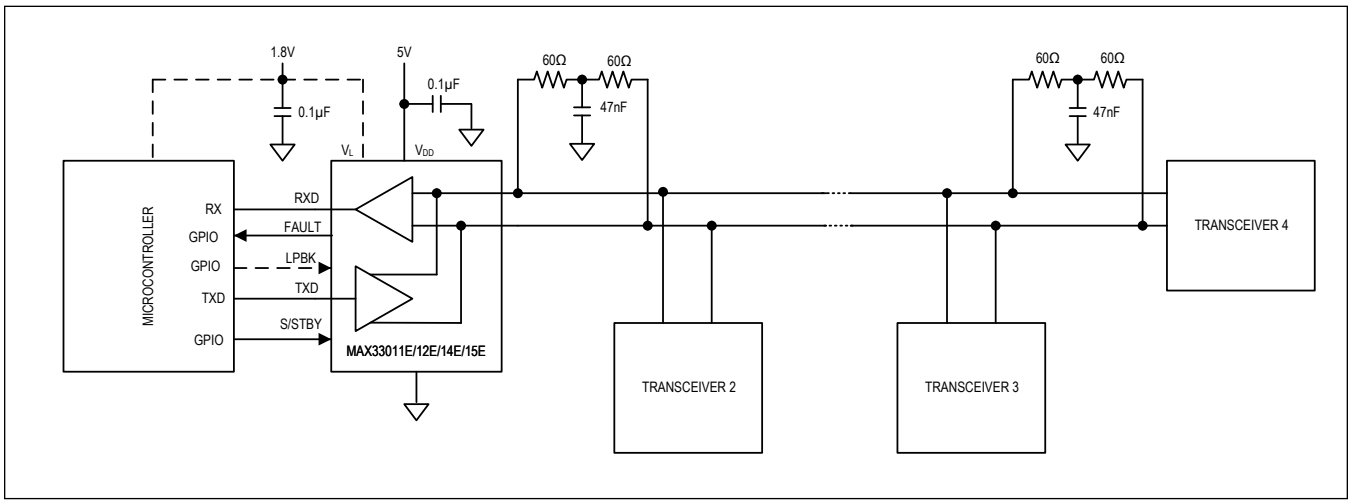

Ordering Information

PART NUMBER	TEMP RANGE	PIN-PACKAGE	FEATURE SET
MAX33011EASA+	-40°C to +125°C	8 SO	S
MAX33012EASA+	-40°C to +125°C	8 SO	STBY
MAX33014EATB+	-40°C to +125°C	10 TDFN	STBY, LPBK, VL
MAX33015EATB+	-40°C to +125°C	10 TDFN	S, LPBK, VL

+ Denotes a lead(Pb)-free/RoHS-compliant package.

Revision History

REVISION NUMBER	REVISION DATE	DESCRIPTION	PAGES CHANGED
0	12/19	Initial release	—
1	6/20	Updated to include MAX33011EASA+ information in the *Electrical Characteristics* table, *Pin Description*, *Detailed Description*, and *Ordering Information* table	4, 15, 16, 19, 21
2	2/21	Updated *Electrical Characteristics* table, *Detailed Description*, and *Ordering Information* table	4, 20, 21

For pricing, delivery, and ordering information, please visit Maxim Integrated's online storefront at https://www.maximintegrated.com/en/storefront/storefront.html.

Maxim Integrated cannot assume responsibility for use of any circuitry other than circuitry entirely embodied in a Maxim Integrated product. No circuit patent licenses are implied. Maxim Integrated reserves the right to change the circuitry and specifications without notice at any time. The parametric values (min and max limits) shown in the Electrical Characteristics table are guaranteed. Other parametric values quoted in this data sheet are provided for guidance.

Maxim Integrated and the Maxim Integrated logo are trademarks of Maxim Integrated Products, Inc. © 2021 Maxim Integrated Products, Inc.