MASW-007935

GaAs SPDT Terminated Switch
DC - 3.0 GHz

Rev. V2

Features

- Low Insertion Loss: 0.5 dB typical up to 1 GHz
- High Isolation: > 38 dB @ 900 MHz
- Low Power Consumption: < 10µA @ -3 V
- Positive or Negative 2.5 to 8 V Control
- Lead-Free SOT-26 Package
- 100% Matte Tin Plating over Copper
- Halogen-Free "Green" Mold Compound
- 260°C Reflow Compatible
- RoHS* Compliant Version of SW-442

Description

M/A-COM's MASW-007935 is a GaAs monolithic switch in a low cost lead-free SOT-26 surface mount plastic package. The MASW-007935 is ideally suited for applications where very low power consumption, low insertion loss and very small size are required.

Typical application is in dual band systems which require switching between small signal components such as filter banks, single band LNA's, converters etc. The MASW-007935 can be used in applications up to 0.25 Watts in systems such as CDMA, W-CDMA, PCS, DCS1800, GSM and other analog/ digital wireless communications systems.

The MASW-007935 is fabricated using a mature 0.5 micron GaAs PHEMT process. The process features full passivation for increased performance and reliability.

Ordering Information [1]

Part Number	Package
MASW-007935-000000	Bulk Packaging
MASW-007935-TR1000	1000 piece reel

1. Reference Application Note M513 for reel size information.

Functional Schematic
Positive Control Voltage

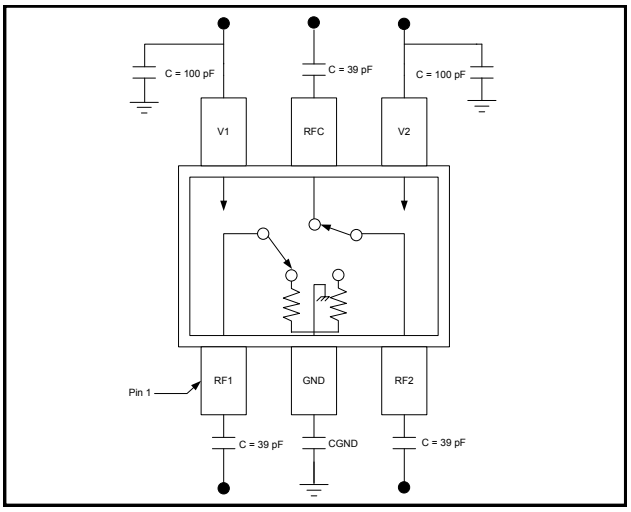

Functional Schematic
Negative Control Voltage

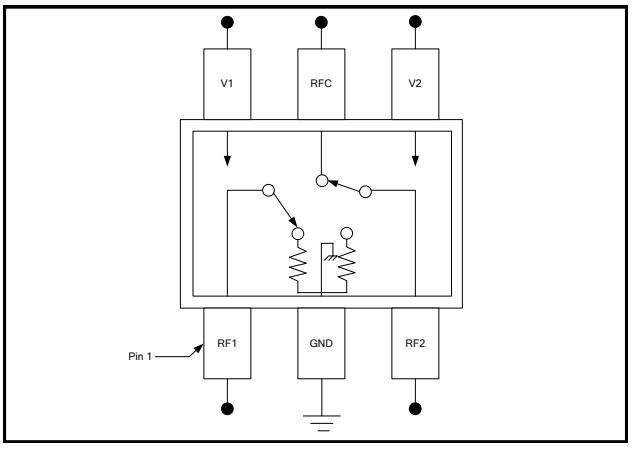

Pin Configuration

Pin No.	Function	Description
1	RF1	RF Input/Output
2	GND	RF Ground
3	RF2	RF Input/Output
4	V2	V Control 2
5	RFC	RF Common
6	V1	V Control 1

* Restrictions on Hazardous Substances, European Union Directive 2002/95/EC.

M/A-COM Technology Solutions Inc. (MACOM) and its affiliates reserve the right to make changes to the product(s) or information contained herein without notice.
Visit www.macom.com for additional data sheets and product information.

For further information and support please visit:
https://www.macom.com/support

Electrical Specifications: T_A = 25°C, Z_0 = 50 Ω [2], V_{CTL} = -3V (unless otherwise specified)

Parameter	Test Conditions	Units	Min.	Typ.	Max.
Insertion Loss[3]	DC-1 GHz 1-2 GHz 2-3 GHz	dB dB dB	— — —	0.5 0.8 1.1	0.7 1.0 1.25
Isolation	DC-1 GHz 1-2 GHz 2-3 GHz	dB dB dB	36 25 21	38 28 22	— — —
VSWR	DC-2 GHz 2-3 GHz	Ratio Ratio	— —	1.4:1 1.6:1	1.5:1 1.7:1
P_{1dB} (2.7 V supply)	500 MHz - 3 GHz	dBm	—	24	—
P_{1dB} (5 V supply)	500 MHz - 3 GHz	dBm	—	28	—
IP_2 (2.7 V supply)	2-Tone 900 MHz, 5 MHz spacing, 10 dBm each tone	dBm	—	80	—
IP_3 (2.7 V supply)	2-Tone 900 MHz, 5 MHz spacing, 10 dBm each tone	dBm	—	50	—
T_{rise}, T_{fall} T_{on}, T_{off} Transients	10% to 90% RF, 90% to 10% RF 50% Control to 90% RF, 50% Control to 10% RF In-Band	nS nS mV	— — —	40 60 10	— — —
Control Current	VCTL = -3V	µA	—	6	15

2. External DC blocking capacitors are required on all RF ports when using positive voltage control.
3. Insertion loss can be optimized by varying the DC blocking capacitor value, e.g. 1000 pF for 100 MHz - 1 GHz, 39 pF for 0.5 GHz - 3 GHz.

Absolute Maximum Ratings [4,5]

Parameter	Absolute Maximum
Input Power (0.5 - 3.0 GHz) 3 V Control 5 V Control	 +30 dBm +33 dBm
Operating Voltage	+8.5 Volts
Operating Temperature	-40°C to +85°C
Storage Temperature	-65°C to +150°C

4. Exceeding any one or combination of these limits may cause permanent damage to this device.
5. M/A-COM does not recommend sustained operation near these survivability limits.

Truth Table

Mode (Control)	V1	V2	RFC - RF1	RFC - RF2
Positive[6]	0 ± 0.2 V +2.5 to +8 V	+2.5 to +8 V 0 ± 0.2 V	On Off	Off On
Negative[7]	0 ± 0.2 V -2.5 to -8 V	-2.5 to -8 V 0 ± 0.2 V	Off On	On Off

6. External DC blocking capacitors are required on all RF ports and GND. GND capacitors can be used with positive control voltage to resonate lead inductance for improved isolation.
7. If negative control is used, DC blocking capacitors and GND capacitors are not required.

M/A-COM Technology Solutions Inc. (MACOM) and its affiliates reserve the right to make changes to the product(s) or information contained herein without notice.
Visit www.macom.com for additional data sheets and product information.

For further information and support please visit:
https://www.macom.com/support

Typical Performance Curves

Output VSWR vs. Frequency over Temperature

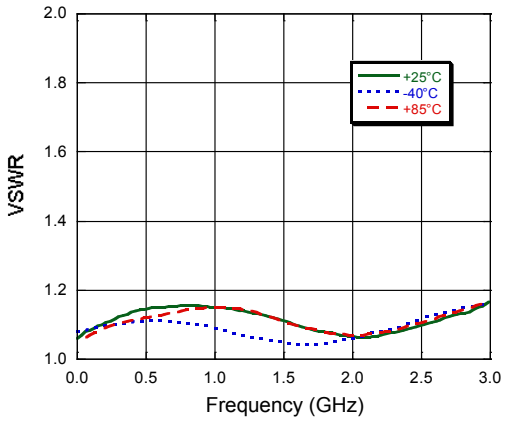

Input VSWR vs. Frequency over Temperature

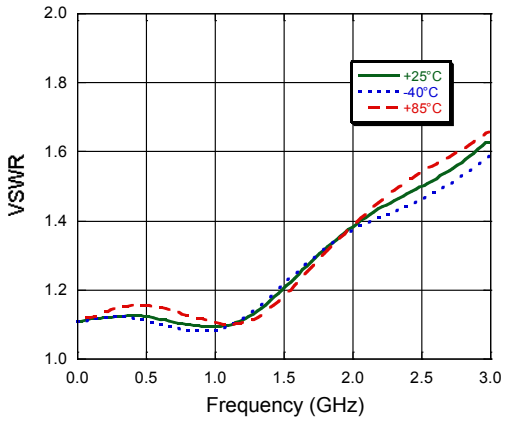

Isolation vs. Frequency over Temperature (Positive Control)

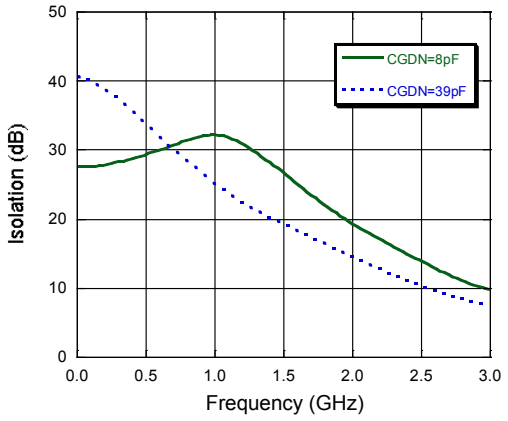

Isolation vs. Frequency over Temperature (Negative Control)

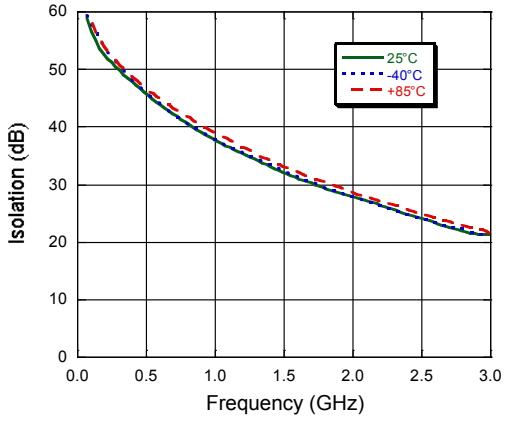

Insertion Loss vs. Frequency over Temperature (Positive Control)

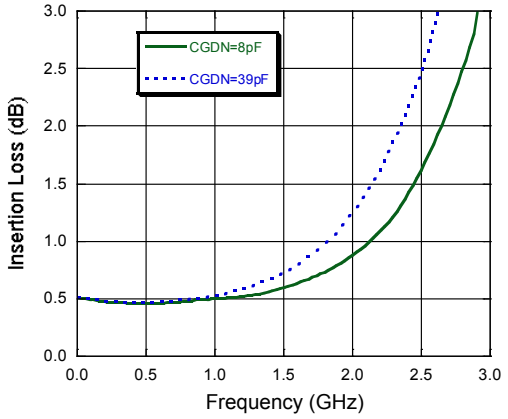

Insertion Loss vs. Frequency over Temperature (Negative Control)

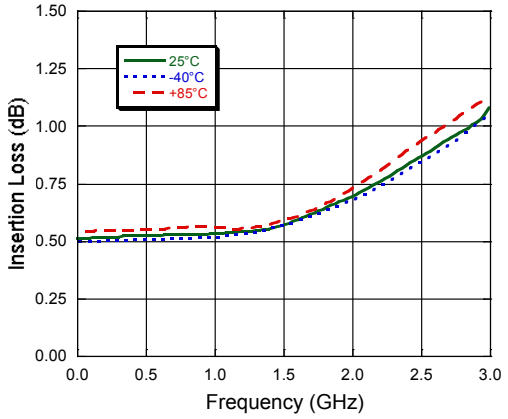

M/A-COM Technology Solutions Inc. (MACOM) and its affiliates reserve the right to make changes to the product(s) or information contained herein without notice.
Visit www.macom.com for additional data sheets and product information.

For further information and support please visit:
https://www.macom.com/support

Lead-Free SOT-26 Plastic Package†

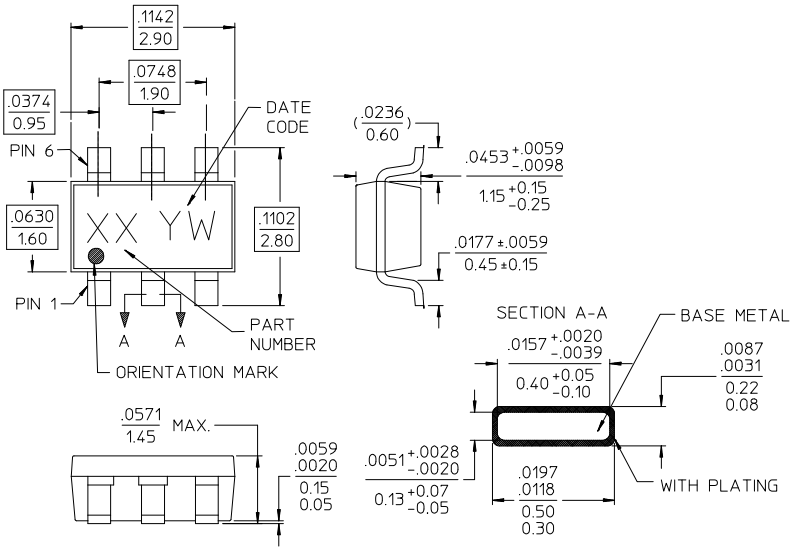

NOTES: 1. REFERENCE JEDEC MO-178-AB FOR ADDITIONAL DIMENSIONAL AND TOLERANCE INFORMATION.
2. REFERENCE M538 APPLICATION NOTE FOR PCB FOOTPRINT INFORMATION.
3. ALL DIMENSIONS SHOWN AS INCHES/MM.

† Reference Application Note M538 for lead-free solder reflow recommendations.
Meets JEDEC moisture sensitivity level 1 requirements.

Handling Procedures

Please observe the following precautions to avoid damage:

Static Sensitivity

Gallium Arsenide Integrated Circuits are sensitive to electrostatic discharge (ESD) and can be damaged by static electricity. Proper ESD control techniques should be used when handling these devices.

M/A-COM Technology Solutions Inc. (MACOM) and its affiliates reserve the right to make changes to the product(s) or information contained herein without notice.
Visit www.macom.com for additional data sheets and product information.

For further information and support please visit:
https://www.macom.com/support

M/A-COM Technology Solutions Inc. All rights reserved.

Information in this document is provided in connection with M/A-COM Technology Solutions Inc ("MACOM") products. These materials are provided by MACOM as a service to its customers and may be used for informational purposes only. Except as provided in MACOM's Terms and Conditions of Sale for such products or in any separate agreement related to this document, MACOM assumes no liability whatsoever. MACOM assumes no responsibility for errors or omissions in these materials. MACOM may make changes to specifications and product descriptions at any time, without notice. MACOM makes no commitment to update the information and shall have no responsibility whatsoever for conflicts or incompatibilities arising from future changes to its specifications and product descriptions. No license, express or implied, by estoppels or otherwise, to any intellectual property rights is granted by this document.

THESE MATERIALS ARE PROVIDED "AS IS" WITHOUT WARRANTY OF ANY KIND, EITHER EXPRESS OR IMPLIED, RELATING TO SALE AND/OR USE OF MACOM PRODUCTS INCLUDING LIABILITY OR WARRANTIES RELATING TO FITNESS FOR A PARTICULAR PURPOSE, CONSEQUENTIAL OR INCIDENTAL DAMAGES, MERCHANTABILITY, OR INFRINGEMENT OF ANY PATENT, COPYRIGHT OR OTHER INTELLECTUAL PROPERTY RIGHT. MACOM FURTHER DOES NOT WARRANT THE ACCURACY OR COMPLETENESS OF THE INFORMATION, TEXT, GRAPHICS OR OTHER ITEMS CONTAINED WITHIN THESE MATERIALS. MACOM SHALL NOT BE LIABLE FOR ANY SPECIAL, INDIRECT, INCIDENTAL, OR CONSEQUENTIAL DAMAGES, INCLUDING WITHOUT LIMITATION, LOST REVENUES OR LOST PROFITS, WHICH MAY RESULT FROM THE USE OF THESE MATERIALS.

MACOM products are not intended for use in medical, lifesaving or life sustaining applications. MACOM customers using or selling MACOM products for use in such applications do so at their own risk and agree to fully indemnify MACOM for any damages resulting from such improper use or sale.