LC72722PMS

RDS/RBDS Single-chip Signal Processor IC

ON Semiconductor®

www.onsemi.com

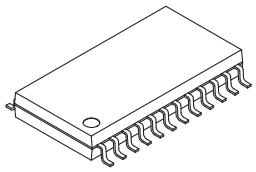

SOIC24 W / MFP24 (375 mil)

Overview

The LC72722PMS is a single-chip system IC that implement the signal processing required by the European Broadcasting Union RDS (Radio Data System) standard and by the US NRSC (National Radio System Committee) RBDS (Radio Broadcast Data System) standard. This IC include band-pass filter, demodulator, synchronization, and error correction circuits as well as data buffer RAM on chip and perform effective error correction using a soft-decision error correction technique.

Functions

- Band-pass filter : switched capacitor filter (SCF)
- Demodulator : RDS data clock regeneration and demodulated data reliability information
- Synchronization : Block synchronization detection
(with variable backward and forward protection conditions)
- Error correction : Soft-decision/hard-decision error correction
- Buffer RAM : Adequate for 24 blocks of data (about 500 ms) and flag memory
- Data I/O : CCB* interface (power on reset)

Features

- Error correction capability improved by soft-decision error correction
- The load on the control microprocessor can be reduced by storing decoded data in the on-chip data buffer RAM.
- Two synchronization detection circuits provide continuous and stable detection of the synchronization.
- Data can be read out starting with the backward-protection block data after a synchronization reset.
- Fully adjustment free

Specifications

- Operating power-supply voltage : 4.5 to 5.5 V
- Operating temperature : –40 to +85°C
- Package : MFP24 (375 mil)

* Computer Control Bus (CCB) is an ON Semiconductor's original bus format and the bus addresses are controlled by ON Semiconductor.

ORDERING INFORMATION

See detailed ordering and shipping information on page 19 of this data sheet.

© Semiconductor Components Industries, LLC, 2017

July 2017 - Rev. 1

Publication Order Number :
LC72722PMS/D

Specifications

Absolute Maximum Ratings at Ta = 25°C, Vssd = Vssa = 0 V

Parameter	Symbol	Pin Name	Ratings	Unit
Maximum supply voltage	Vddmax	Vddd, Vdda	−0.3 to +7.0	V
Maximum input voltage	Vin1max	CL, DI, CE, SYR, T1, T2, T3, T4, T5, T6, T7, SYNC	−0.3 to +7.0	V
	Vin2max	XIN	−0.3 to Vddd+0.3	V
	Vin3max	MPXIN, CIN	−0.3 to Vdda+0.3	V
Maximum output voltage	Vo1max	DO, SYNC, RDS-ID, T3, T4, T5, T6, T7	−0.3 to +7.0	V
	Vo2max	XOUT	−0.3 to Vddd+0.3	V
	Vo3max	FLOUT	−0.3 to Vdda+0.3	V
Maximum output current	Io1max	DO, T3, T4, T5, T6, T7	+6.0	mA
	Io2max	XOUT, FLOUT	+3.0	mA
	Io3max	SYNC, RDS-ID	+20.0	mA
Allowable power dissipation	Pdmax	(Ta ≤ 85°C)	175	mW
Operating temperature	Topr		−40 to +85	°C
Storage temperature	Tstg		−55 to +125	°C

Stresses exceeding those listed in the Maximum Ratings table may damage the device. If any of these limits are exceeded, device functionality should not be assumed, damage may occur and reliability may be affected.

Allowable Operating Ranges at Ta = −40 to +85°C, Vssd = Vssa = 0 V

Parameter	Symbol	Pin Name	Conditions	Ratings			Unit
				min	typ	max	
Supply voltage	Vdd1	Vddd, Vdda		4.5	5.0	5.5	V
	Vdd2	Vddd	Serial data hold voltage	2.0			V
Input high-level voltage	V_{IH}	CL, DI, CE, SYR, T1, T2		0.7Vddd		6.5	V
Input low-level voltage	V_{IL}	CL, DI, CE, SYR, T1, T2		0		0.3Vddd	V
Output voltage	V_O	DO, SYNC, RDS-ID, T3, T4, T5, T6, T7				6.5	V
Input amplitude	V_{IN1}	MPXIN	f = 57 ±2 kHz			50	mVrms
	V_{IN2}		100% modulation composite	100			mVrms
	V_{XIN}	XIN		400		1500	mVrms
Guaranteed crystal Oscillator frequencies	XTAL	XIN, XOUT	CI ≤ 120 Ω (XS = 0)		4.332		MHz
			CI ≤ 70 Ω (XS = 1)		8.664		MHz
Crystal oscillator frequency deviation	TXtal	XIN, XOUT	fo = 4.332 MHz, 8.664 MHz			±100	ppm
Data setup time	tSU	DI, CL		0.75			μs
Data hold time	tHD	DI, CL		0.75			μs
Clock low level time	tCL	CL		0.75			μs
Clock high level time	tCH	CL		0.75			μs
CE wait time	tEL	CE, CL		0.75			μs
CE setup time	tES	CE, CL		0.75			μs
CE hold time	tEH	CE, CL		0.75			μs
CE high-level time	tCE	CE				20	ms
Data latch change time	tLC					1.15	μs
Data output time	tDC	DO,CL	Differs depending on the value of the pull-up resistor used.			0.46	μs
	tDH	DO,CE				0.46	μs

Functional operation above the stresses listed in the Recommended Operating Ranges is not implied. Extended exposure to stresses beyond the Recommended Operating Ranges limits may affect device reliability.

Electrical Characteristics at Ta = −40 to +85°C, Vssd = Vssa = 0 V

Parameter	Symbol	Pin Name	Conditions	Ratings			Unit
				min	typ	max	
Input resistance	R_{MPXIN}	MPXIN-Vssa	f = 57 kHz		43.0		kΩ
	Rcin	C_{IN}-Vssa	f = 57 kHz		100.0		kΩ
Internal feedback resistance	Rf	XIN			1.0		MΩ
Center frequency	fc	FLOUT		56.5	57.0	57.5	kHz
−3 dB band width	$BW_{-3\ dB}$	FLOUT		2.5	3.0	3.5	kHz
Gain	Gain	MPXIN-FLOUT	f = 57 kHz	28	31	34	dB
Stop band Attenuation	Att1	FLOUT	Δf = ±7 kHz	30			dB
	Att2	FLOUT	f < 45 kHz, f > 70 kHz	40			dB
	Att3	FLOUT	f < 20 kHz	50			dB
Reference voltage output	Vref	Vref	Vdda = 5.0 V		2.5		V
Hysteresis	V_{HIS}	CL, DI, CE, SYR, T1, T2			0.1Vddd		V
Output low-level voltage	V_{OL1}	DO, T3, T4, T5, T6, T7	I = 2 mA			0.5	V
	V_{OL2}	SYNC, RDS-ID	I = 8 mA			0.5	V
Input high-level current	I_{IH1}	CL, DI, CE, SYR, T1, T2	V_I = Vddd			5.0	μA
	I_{IH2}	XIN	V_I = Vddd	2.0		11.0	μA
Input low-level current	I_{IL1}	CL, DI, CE, SYR, T1, T2	V_I = 0 V			5.0	μA
	I_{IL2}	XIN	V_I = 0 V	2.0		11.0	μA
Output off leakage current	I_{OFF}	DO, SYNC, RDS-ID, T3, T4, T5, T6, T7	V_O = 6.5 V			5.0	μA
Current drain	Idd	Vddd, Vdda			9		mA

Product parametric performance is indicated in the Electrical Characteristics for the listed test conditions, unless otherwise noted. Product performance may not be indicated by the Electrical Characteristics if operated under different conditions.

Package Dimensions

unit : mm

SOIC24 W / MFP24 (375 mil)
CASE 751CF
ISSUE A

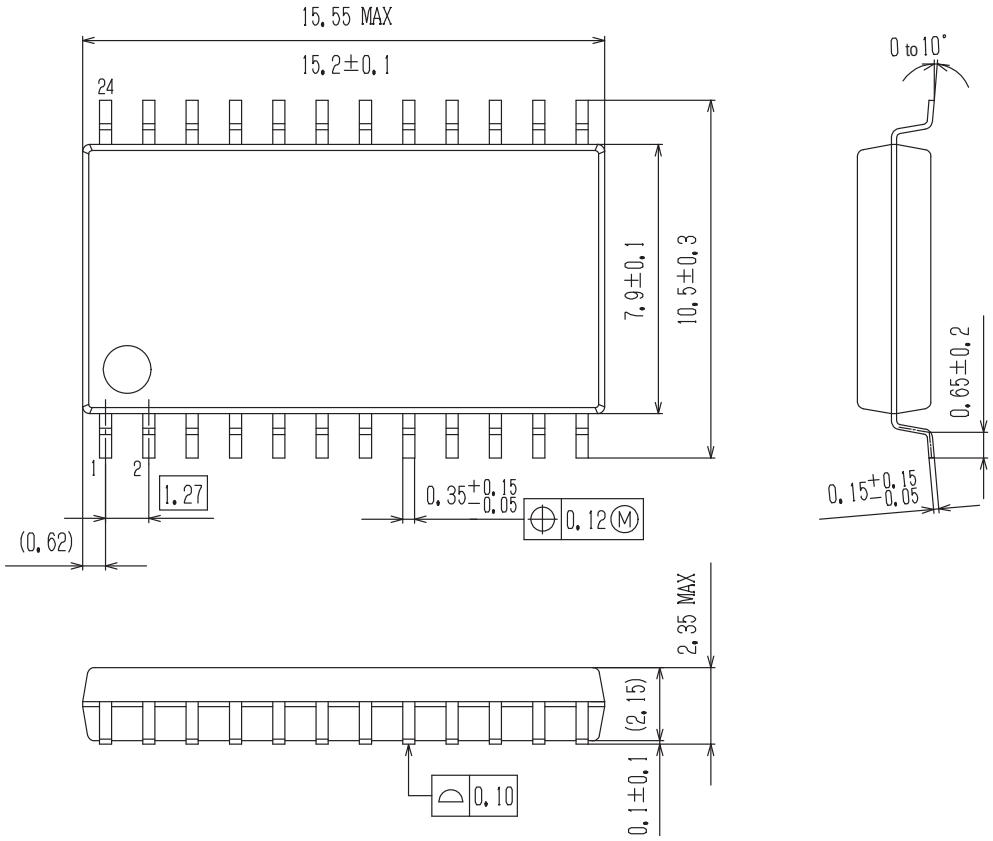

SOLDERING FOOTPRINT*

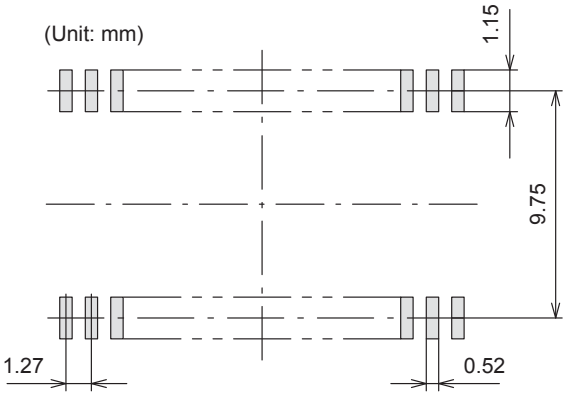

NOTE: The measurements are not to guarantee but for reference only.

*For additional information on our Pb-Free strategy and soldering details, please download the ON Semiconductor Soldering and Mounting Techniques Reference Manual, SOLDERRM/D.

GENERIC MARKING DIAGRAM*

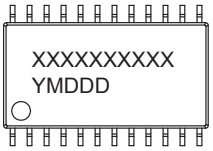

XXXXX = Specific Device Code
Y = Year
M = Month
DDD = Additional Traceability Data

*This information is generic.
Pb-Free indicator, “G” or microdot “▪”, may or may not be present.

Pin Assignment

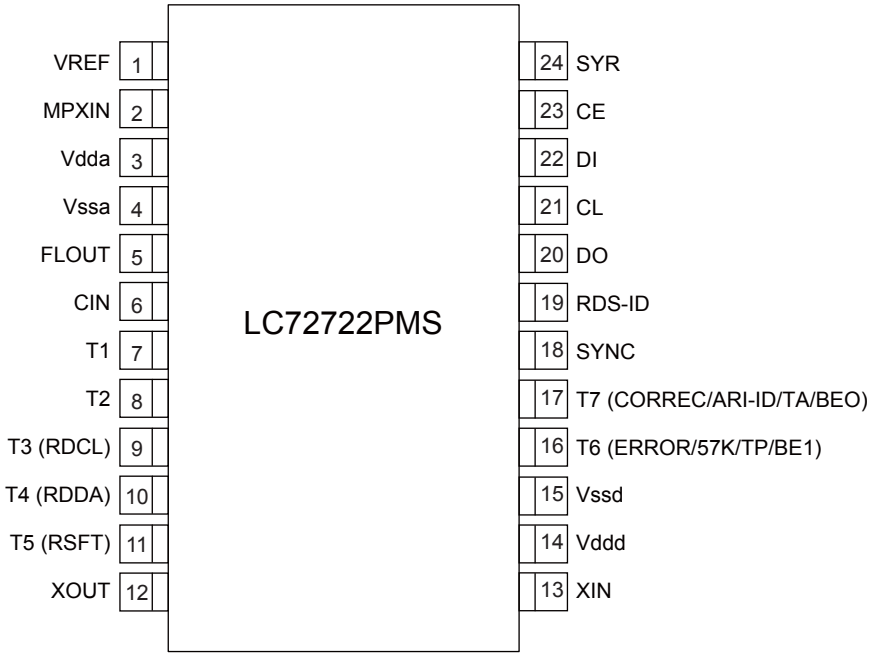

Top view

Block Diagram

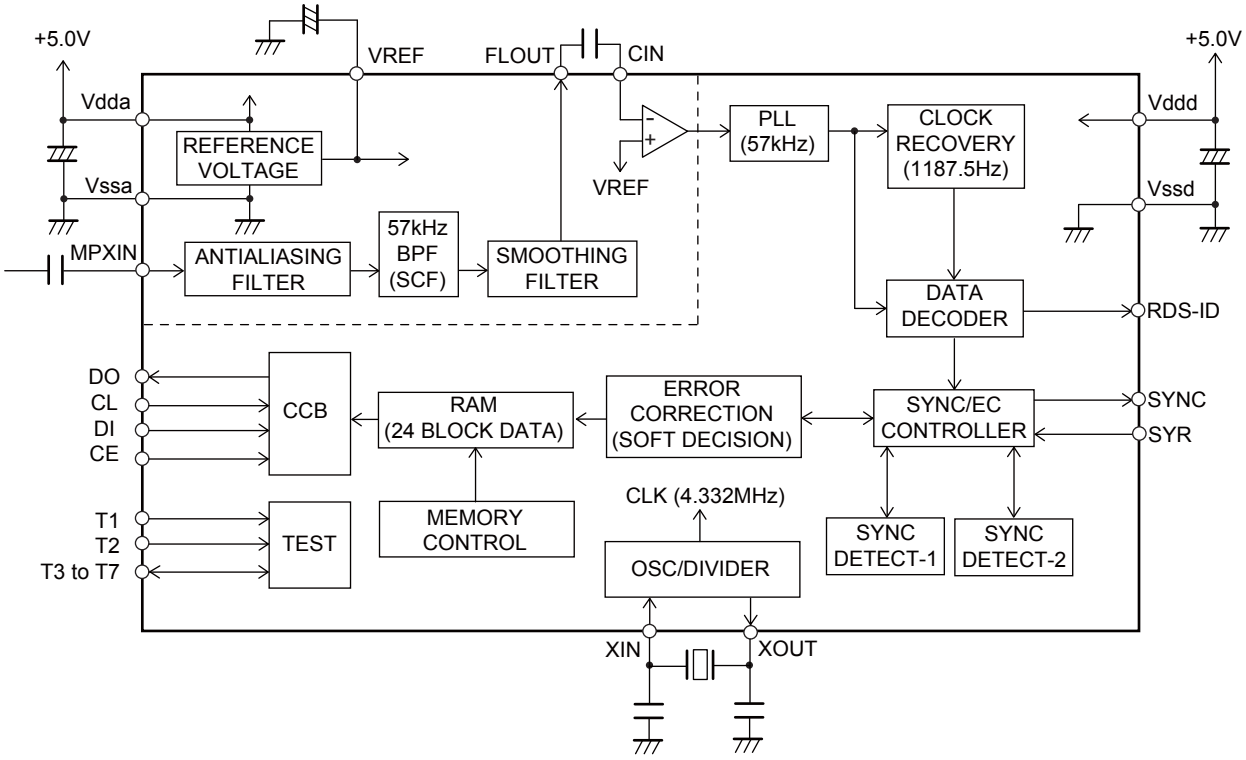

Pin Functions

Pin No.	Pin name	Function	I/O	Pin circuit
1	VREF	Reference voltage output (Vdda/2)	Output	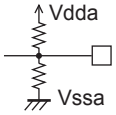
2	MPXIN	Baseband (multiplexed) signal input	Input	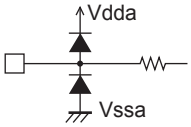
5	FLOUT	Subcarrier output (filter output)	Output	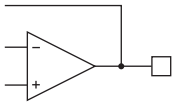
7	CIN	Subcarrier input (comparator input)	Input	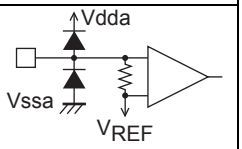
3	Vdda	Analog system power supply (+5 V)	–	–
4	Vssa	Analog system ground	–	–
12	XOUT	Crystal oscillator output (4.332 / 8.664 MHz)	Output	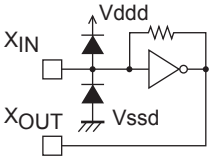
13	XIN	Crystal oscillator input (external reference signal input)	Input	
7	T1	Test input (This pin must always be connected to ground.)		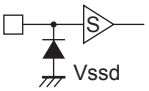
8	T2	Test input (standby control) 0:Normal operation, 1:Standby state (crystal oscillator stopped)		
9	T3(RDCL)	Test I/O (RDS clock output)	I/O*	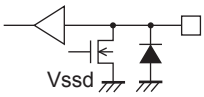
10	T4(RDDA)	Test I/O (RDS data output)		
11	T5(RSFT)	Test I/O (soft-decision control data output)		
16	T6 (ERROR/57K/BE1)	Test I/O (error status, regenerated carrier, error block count)		
17	T7 (CORREC/ARI-ID/BE0)	Test I/O (error correction status, SK detection, error block count)		
18	SYNC	Block synchronization detection output		
19	RDS-ID	RDS detection output	Output	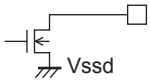
20	DO	Data output		
21	CL	Clock input — Serial data interface (CCB)	Input	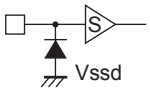
22	DI	Data input		
23	CE	Chip enable		
24	SYR	Synchronization and RAM address reset (active high)		
14	Vddd	Digital system power supply (+5 V)	–	–
15	Vssd	Digital system ground	–	–

Note : * Normally function as an output pin. Used as an I/O pin in test mode, which is not available to user applications.

CCB output data format

1. Each block of output data consists of 32 bits (4 bytes), of which 2 bytes are RDS data and 2 bytes are flag data.
2. Any number of 32-bits output data blocks can be output consecutively.
3. When there is no data that can be read out in the internal memory, the system outputs blocks of all-zero data consecutively.
4. If data readout is interrupted, the next read operation starts with the 32-bit data block whose readout was interrupted. However, if only the last bit is remaining to be read, it will not be possible to re-read that whole block.
5. The check bits (10 bits) are not output.
6. The data valid (OWD) must not be referred to.
7. When the first leading bits are not “1010”, the read in data is in invalid, and read operation is cancelled.

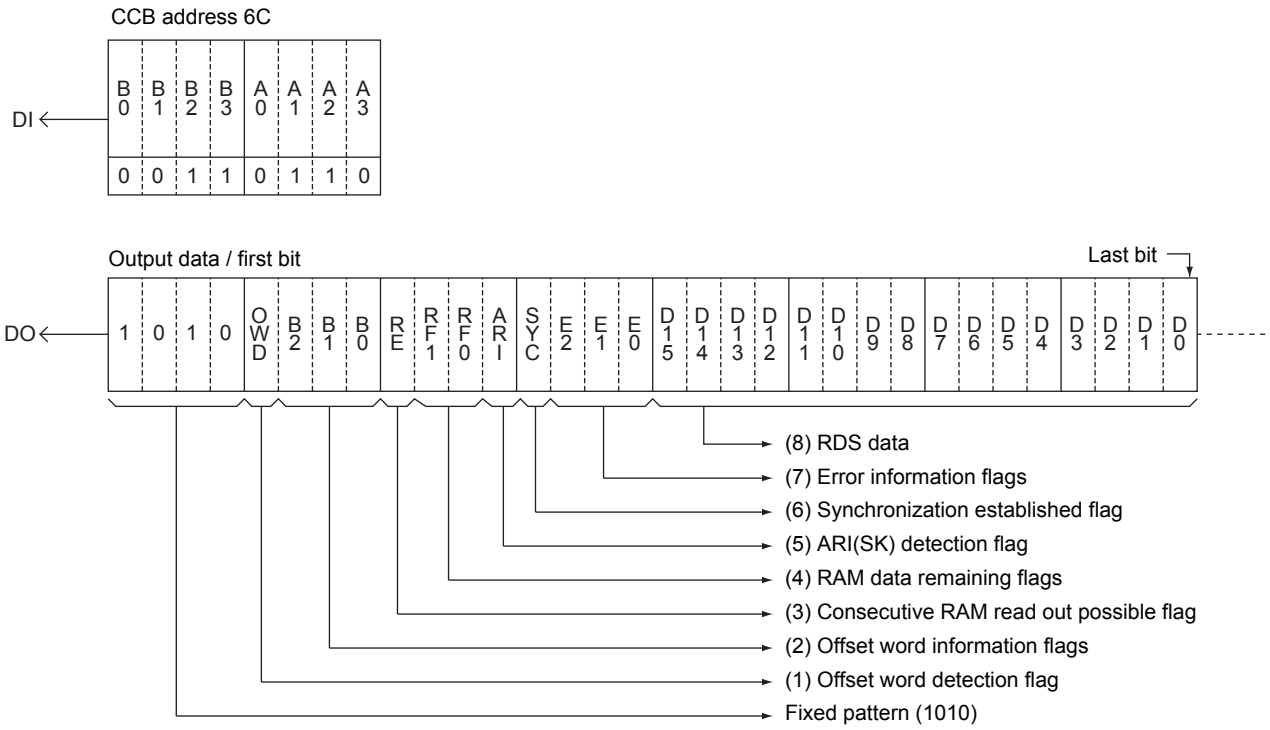

(1) Offset word detection flag (1bit) : OWD

OWD	Offset word detection
1	Detected
0	Not detected (protection function operating)

(2) Offset word information flag (3bit) : B0 to B2

B2	B1	B0	Offset word
0	0	0	A
0	0	1	B
0	1	0	C
0	1	1	C’
1	0	0	D
1	0	1	E
1	1	0	Unused
1	1	1	Unused

(3) Consecutive RAM read out possible flag (1 bit) : RE

RE	RAM data information
1	The next data to be read out is in RAM
0	This data item is the last item in RAM, ant the next data is not present.

(4) RAM data remaining flag (2 bits) : RF0,RF1

RF1	RF0	Remaining data in RAM (number of blocks)
0	0	1 to 7
0	1	8 to 15
1	0	16 to 23
1	1	24

Caution : This value is only meaningful when RE is 1. When RE is 0, there is no data in RAM, even if RF is 00.
If a synchronization reset was applied using SYR, then the backward protection block data that was written to memory is also counted in this value.

(5) ARI(SK) detection flag (1bit) : ARI

ARI	SK signal
1	Detected
0	Not detected

(6) Synchronization established flag (1 bit) : SYC

SYC	Synchronization detection
1	Synchronized
0	Not synchronized

Caution : This flag indicates the synchronization state of the circuit at the point when the data block being output was received.
On the other hand, the SYNC pin (pin18) output indicates the current synchronization state of the circuit.

(7) Error information flags (3 bits) : E0 to E2

E2	E1	E0	Number of bits corrected
0	0	0	0 (no errors)
0	0	1	1
0	1	0	2
0	1	1	3
1	0	0	4
1	0	1	5
1	1	0	Correction not possible
1	1	1	Unused

Caution : If the number of errors exceeds the value of the EC0 to EC2 setting (see the section on the CCB input format), the error information flags will be set to the “Correction not possible” value.

(8) RDS data (16 bits) : D0 to D15

This data is output with the MSB first ant the LSB last.

Caution : When error correction was not possible, the input data is output without change.

CCB Input data format

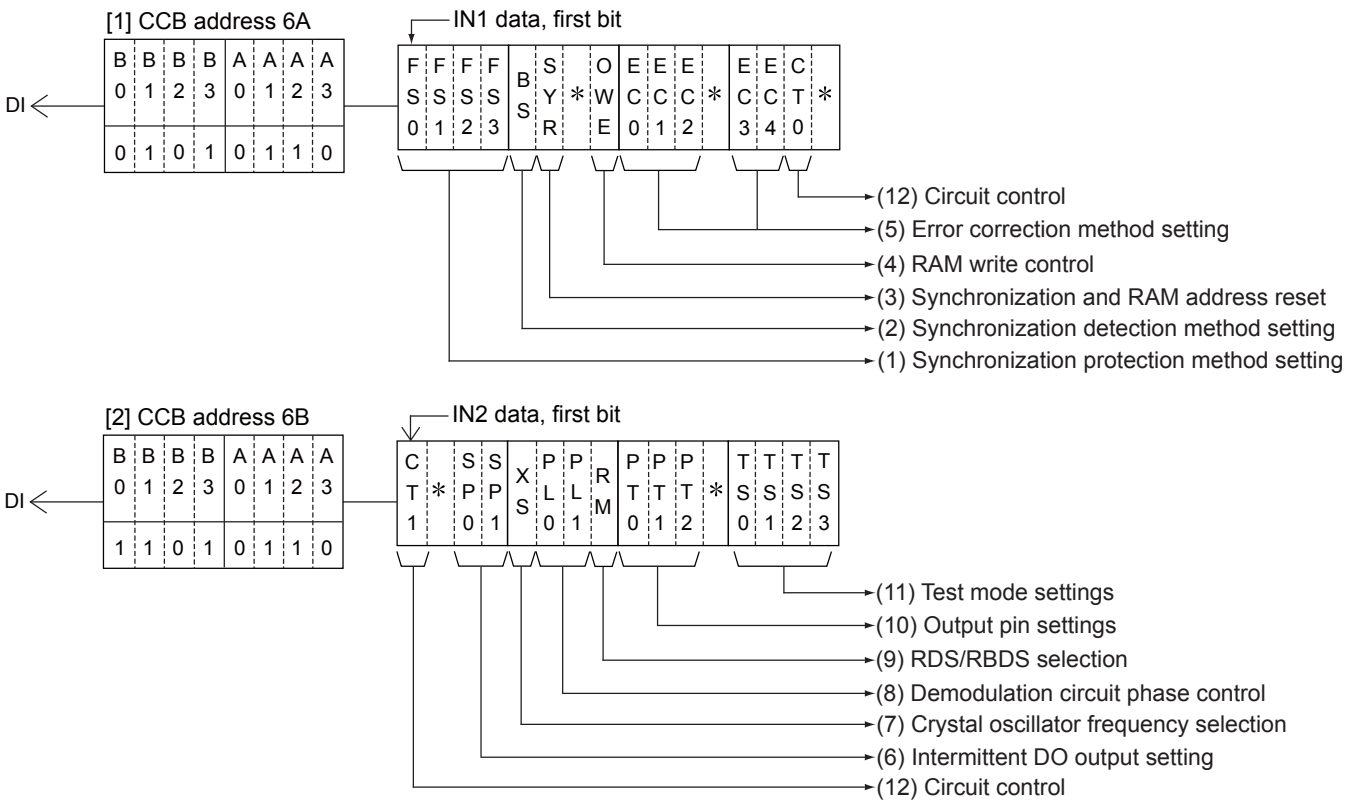

Caution : The bits labeled with an asterisk must be set to 0.

(1) Synchronization protection (forward protection) method setting (4 bits) : FS0 to FS3

FS3 = 0 : If offset words in the correct order could not be detected continuously during the number of blocks specified by FS0 to FS2, take that to be a lost synchronization sate.

FS3 = 1 : If blocks with uncorrectable errors were received consecutively during the number of blocks specified by FS0 to FS2, take that to be a lost synchronization state.

FS0	FS1	FS2	Condition for detecting lost synchronization
0	0	0	If 3 consecutive blocks matching the FS3 condition are received.
1	0	0	If 4 consecutive blocks matching the FS3 condition are received.
0	1	0	If 5 consecutive blocks matching the FS3 condition are received.
1	1	0	If 6 consecutive blocks matching the FS3 condition are received.
0	0	1	If 8 consecutive blocks matching the FS3 condition are received.
1	0	1	If 10 consecutive blocks matching the FS3 condition are received.
0	1	1	If 12 consecutive blocks matching the FS3 condition are received.
1	1	1	If 16 consecutive blocks matching the FS3 condition are received.

Initial value : FS0 = 0, FS1 = 1, FS2 = 0, FS3 = 0

(2) Synchronization detection method setting (1 bit) : BS

BS	Synchronization detection conditions
0	If during 3 blocks, 2 blocks of offset words were detected in the correct order.
1	If the offset words were detected in the correct order in 2 consecutive blocks.

Initial value : BS = 0

(3) Synchronization and RAM address reset (1 bit) : SYR

SYR	Synchronization detection circuit	RAM
0	Normal operation (reset cleared)	Normal write (See the description of the OWE bit)
1	Forced to the unsynchronized state (synchronization reset)	After the reset is cleared, start writing from the data prior to the establishment of synchronization, i.e. the data in backward protection.

Initial value : SYR = 0

Caution :
1. To apply a synchronization reset, set SYR to 1 temporarily using CCB, and then set it back to 0 again using CCB. The circuit will start synchronization capture operation at the point SYR is set to 0.
2. The SYR pin (pin24) also provides an identical reset control operation. Applications can use either method. However, the control method that is not used must be set to 0 at all times. Any pulse with a width of over 250 ns will suffice.
3. A reset must be applied immediately after the reception channel is changed. If a reset is not applied, reception data from the previous channel may remain in on-chip memory.
4. Data read out after a synchronization reset is read out starting with the backward protection block data preceding the establishment of synchronization.

(4) RAM write control (1bit) : OWE

OWE	RAM write conditions
0	Only data for which synchronization had been established is written.
1	Data for which synchronization not has been established (unsynchronized data) is also written. (However, this applies when SYR = 0.)

Initial value : OWE = 0

(5) Error correction method setting (5 bits) : EC0 to EC4

EC0	EC1	EC2	Number of bits corrected
0	0	0	0 (error detection only)
1	0	0	1 or fewer bits
0	1	0	2 or fewer bits
1	1	0	3 or fewer bits
0	0	1	4 or fewer bits
1	0	1	5 or fewer bits
0	1	1	Illegal value
1	1	1	Illegal value

EC3	EC4	Soft-decision setting
0	0	MODE0 Hard decision
1	0	MODE1 Soft decision A
0	1	MODE2 Soft decision B
1	1	Illegal value

Initial values : EC0 = 0, EC1 = 1, EC2 = 0, EC3 = 0, EC4 = 1

Caution :
1. If soft-decision A or soft-decision B is specified, soft-decision control will be performed even if the number of bits corrected is set to 0 (error detection only). With these settings, data will be output for blocks with no errors.
2. As opposed to soft-decision B, the soft-decision A setting suppresses soft decision error correction.

(6) Intermittent DO output setting

SP0	SP1	DO output state
0	0	DO goes low when one or more blocks of data are written to memory.
1	0	DO goes low when 4 or more blocks of data are written to memory.
0	1	DO goes low when 8 or more blocks of data are written to memory.
1	1	DO goes low when 12 or more blocks of data are written to memory.

Initial values : SP0 = 0, SP1 = 0

(7) Crystal oscillator frequency selection (1 bit) : XS

XS = 0 : 4.332 MHz (Initial value : XS = 0)
XS = 1 : 8.664 MHz

(8) Demodulation circuit phase control (2 bits) : PL0, PL1

PL0	PL1	Demodulation circuit phase control
0	0/1	< Normal operation > when ARI presence or absence is unclear.
1	0	If the circuit determines that the ARI signal is absent : 90° phase
	1	If the circuit determines that the ARI signal is present : 0° phase

Initial values : PL0 = 0, PL1 = 1

Caution : 1. When PL0 is 0 (normal operation), the IC detects the presence or absence of the ARI signal and reproduces the RDS data by automatically controlling the demodulation phase with respect to the reproduced carrier. However, the initial phase following a synchronization reset is set by PL1.

2. If PL0 is set to 1, the demodulation circuit phase is locked according to the PL1 setting at either 90° (PL1 = 0) or 0° (PL1 = 1), allowing RDS data to be reproduced. When ARI is not present, PL1 should be set to 0, since the RDS data is reproduced by detecting at a phase of 90° with respect to the reproduced carrier. When ARI is present, PL1 should be set to 1, since detection is at 0°. In cases where the ARI presence is known in advance, more stable reproduction can be achieved by fixing the demodulation phase in this manner.

(9) RDS/RBDS(MMBS) selection (1 bit) : RM

RM	RBDS	Decoding method
0	None	Only RDS data is decoded correctly (Offset word E is not detected.)
1	Provided	RDS and MMBS data is decoded correctly (Offset word E is also detected.)

Initial value : RM=0

(10) Output pin settings (3 bits) : PT0 to PT2
These bits control the T3, T4, T5, T6, T7, SYNC, and RDS-ID pins

MODE	PT0	PT1	PT2	T3	T4	T5	T6				T7			
				RDCL	RDDA	RSFT	ERROR	57K	TP	BE1	CORREC	ARI-ID	TA	BE0
0	0	0	0	–	–	–	–	–		–	–	–	–	–
1	1	0	0	–	–	–	–	–		–	–	–	○	–
2	0	1	0	○	○	○	–	○		–	–	○	–	–
3	1	1	0	○	○	○	○	–		–	○	–	–	–
4	0	0	1	–	–	–	–	–		○	–	–	–	○
5	1	0	1	–	○	○	–	–	●	–	–	–	●	–
6	0	1	1	○	○	○	–	●		–	–	●	–	–
7	1	1	1	○	○	○	●	–		–	●	–	–	–

– : open, ○, ● : Output enabled (● = reverse polarity)

Initial value : PT0 = 1, PT1 = 1, PT2 = 0 (Mode 3)

Caution : 1. When PT2 is set to 1, the polarity of the T6(ERROR/57K/TP), T7(CORREC/ARI-ID/TA), SYNC, and RDS-ID pins changes to active high.

2. The output pins (T3 to T7, SYNC, and RDS-ID) are all open-drain pins, and require external pull-up resistors to output data.

Mode1 (PT2 = 0)	Pin T6 (TP)
TP = 0 detected	High (1)
TP = 1 detected	Low (0)

TP = Traffic program code

Mode1 (PT2 = 0)	Pin T7 (TA)
TA = 0 detected	High (1)
TA = 1 detected	Low (0)

TA = Traffic announcement code

Mode2 (PT2 = 0)	Pin T7 (ARI-ID)
No SK	High (1)
SK present	Low (0)

Mode3 (PT2 = 0)	Pin T6 (ERROR)	Pin T7 (CORREC)
Correction not possible	Low (0)	Low (0)
Errors corrected	High (1)	Low (0)
No errors	High (1)	High (1)

Mode = 4 Number of error blocks (B)	Pin T6 (BE1)	Pin T7 (BE0)
B=0	Low (0)	Low (0)
$1 \leq B \leq 20$	Low (0)	High (1)
$20 < B \leq 40$	High (1)	Low (0)
$40 < B \leq 48$	High (1)	High (1)

These pins indicate the number of blocks in a set of 48 blocks that had errors before correction.
The output polarity of these pins is fixed at the values listed in the table.

Mode (PT2 = 0)	The SYNC pin
0 to 2	When synchronized : Low (0), When unsynchronized: High (1)
3	When synchronized : Goes high for a fixed period (421 μs) at the start of a block and then goes low. When unsynchronized : High (1)

Caution : The output indicates the synchronization state for the previous block.

When PT2 = 0	The RDS-ID pin
No RDS	High (1)
RDS present	Low (0)

(11) Test mode settings (4 bits) : TS0 to TS3
Initial values : TS0 = 0, TS1 = 0, TS2 = 0, TS3 = 0
(Applications must set these bits to the above values.)

Notes : The T1 and T2 pins (pins 7 and 8) are related to test mode as follows.

Pin T1	Pin T2	IC operation	Notes
0	0	Normal operating mode	These states are user settable
0	1	Standby mode (crystal oscillator stopped)	
1	0/1	IC test mode	Users cannot use this state

The T1 pin must be tied to V_{SS} (0V).

(12) Circuit control (2 bits) : CT0 and CT1

	Item	Control
CT0	RSFT control	When set to 1, soft-decision control data (RSFT) is easier to generate.
CT1	RDS-ID detection condition	When set to 1, the RDS-ID detection conditions are made more restrictive.

Initial value : CT0 = 0, CT1 = 0

RDCL / RDDA / RSFT and ERROR / CORREC / SYNC output timing

(1) Timing 1

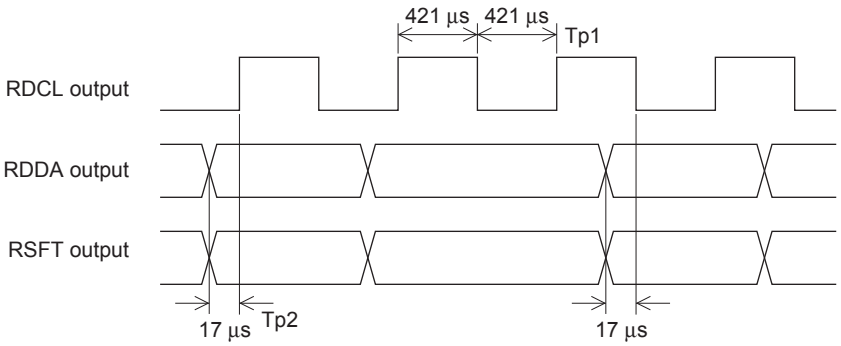

Note : When PT2 = 0, RDDA and RSFT must be acquired on the falling edge of RDCL.

(2) Timing 2 (mode 3, PT2 = 0)

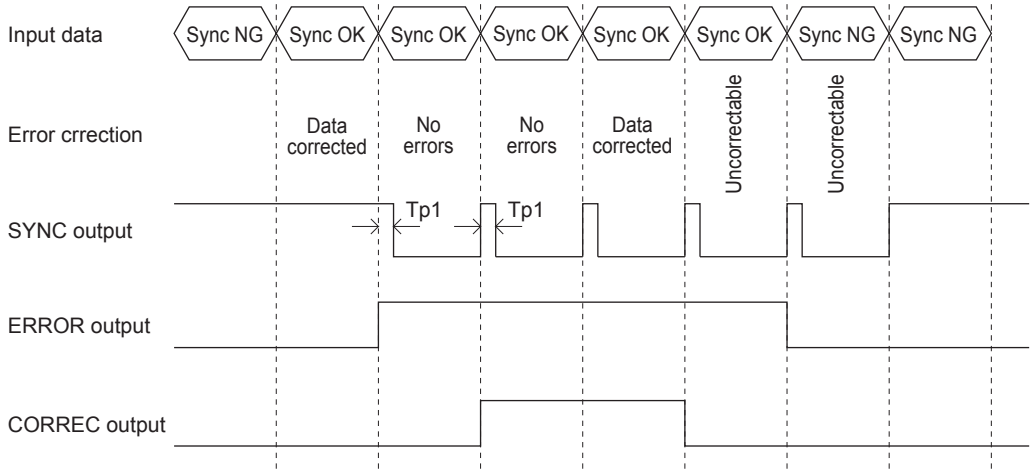

Serial Data Input and Output Methods

Data is input and output using the CCB (Computer Control Bus), which is Our audio IC serial bus format.
This IC adopts an 8-bit address CCB format.

	I/O mode	(LSB) Address (MSB)								Comment
		B0	B1	B2	B3	A0	A1	A2	A3	
[1]	IN1 (6A)	0	1	0	1	0	1	1	0	· Control data input mode, also referred to as " serial data input " mode. · 16bit data input mode
[2]	IN2 (6B)	1	1	0	1	0	1	1	0	
[3]	OUT (6C)	0	0	1	1	0	1	1	0	· Data output mode · The data for multiple blocks can be output sequentially in this mode.

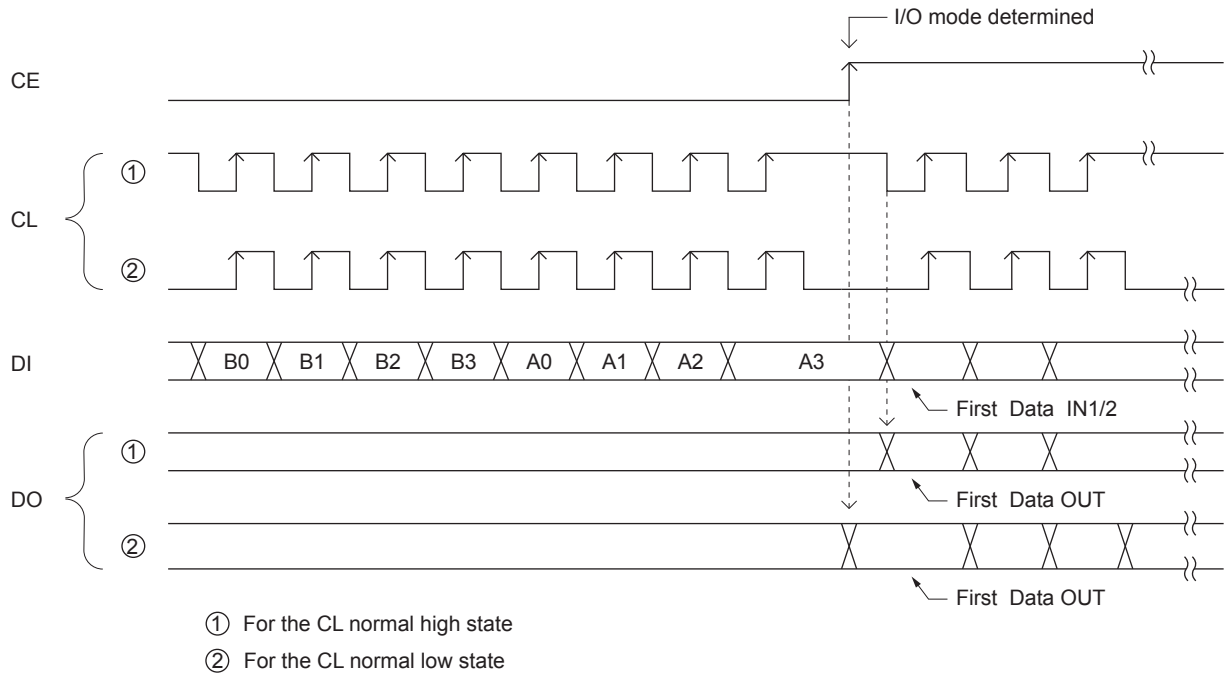

(1) Serial data input (IN1 / IN2)

t_{SU}, t_{HD}, t_{EL}, t_{ES}, t_{EH} ≥ 0.75μs t_{LC} < 1.15μs t_{CE} < 20 ms

① CL : Normal high

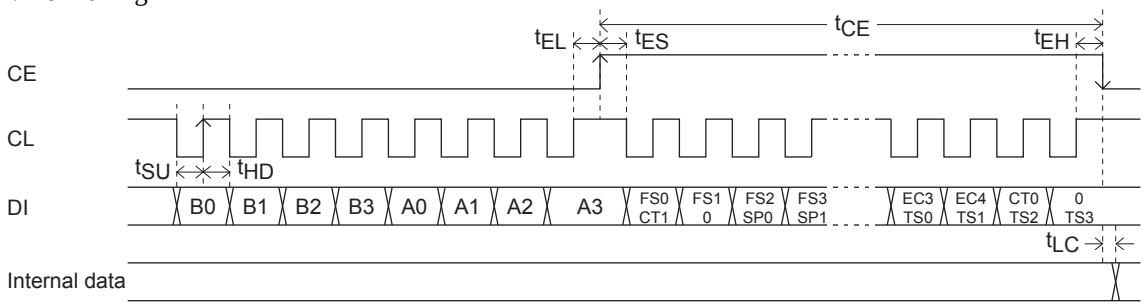

② CL : Normal low

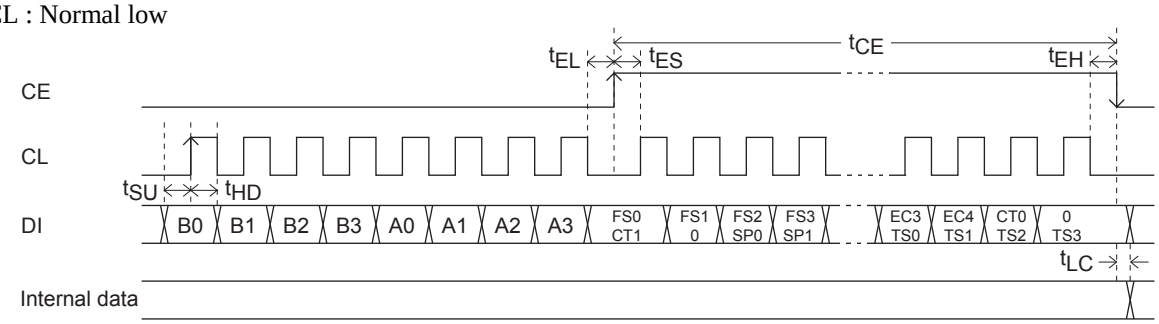

(2) Serial data output (OUT)

t_{SU}, t_{HD}, t_{EL}, t_{ES}, t_{EH} ≥ 0.75μs t_{DC}, t_{DH} < 0.46μs t_{CE} < 20 ms

① CL : Normal high

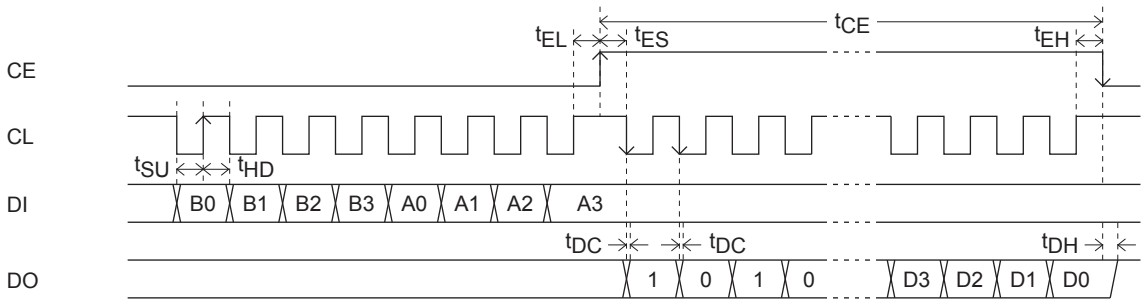

② CL : Normal low

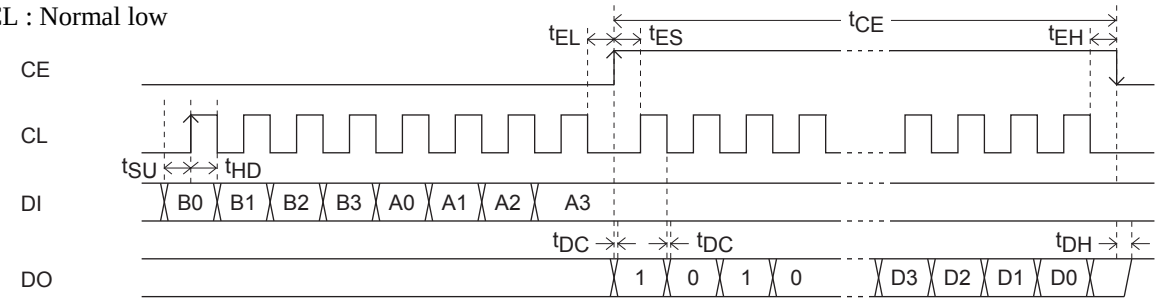

Cautions : 1. Since the DO pin is an n-channel open-drain output, the transition times (t_{DC}, t_{DH}) will differ with the value of the pull-up resistor used.

2. The CE, CL, DI, and DO pins can be connected to the corresponding pins on other ICs that use the CCB interface. (However, we recommend connecting the DO and CE pins separately if the number of available microcontroller ports allows it.)

3. Serial data I/O becomes possible after the crystal oscillator starts oscillation.

(3) Serial data timing

① CL : Normal high

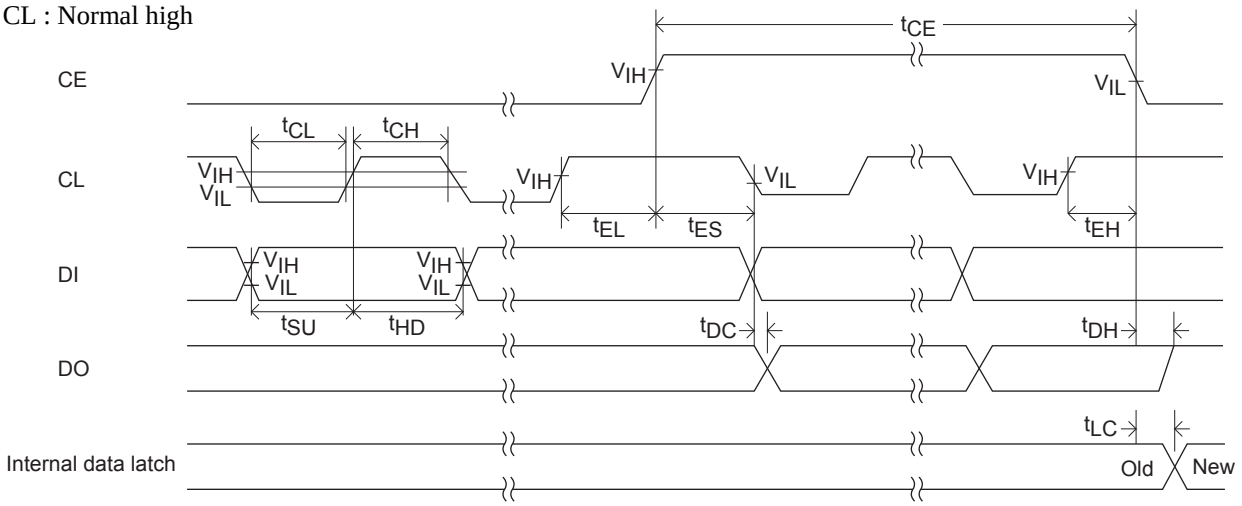

② CL : Normal low

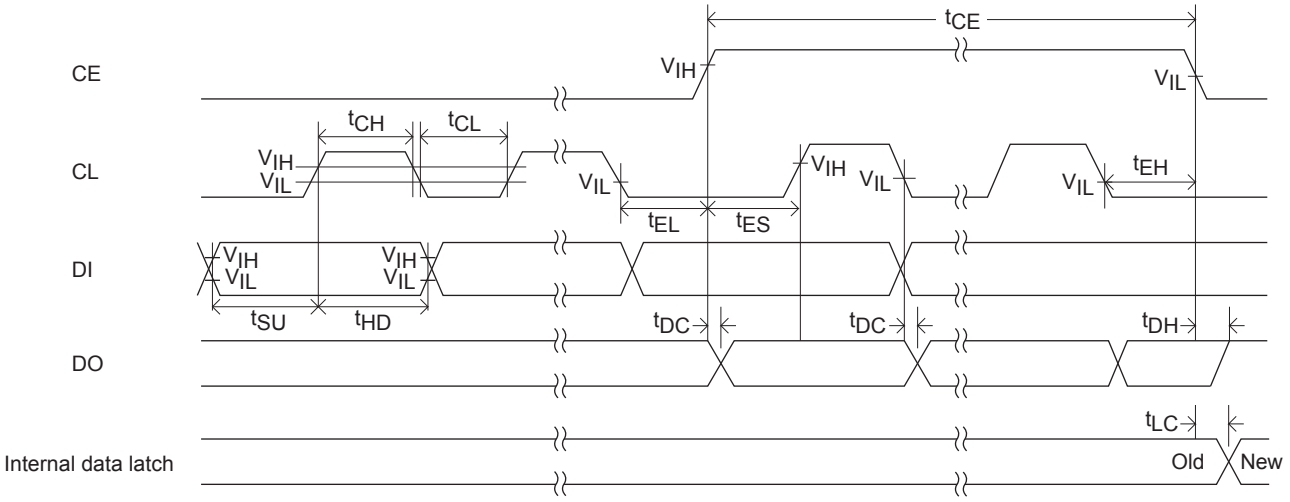

Parameter	Symbol	Conditions		min	typ	max	Unit
Data setup time	t_{SU}	DI, CL		0.75			µs
Data hold time	t_{HD}	DI, CL		0.75			µs
Clock low level time	t_{CL}	CL		0.75			µs
Clock high level time	t_{CH}	CL		0.75			µs
CE wait time	t_{EL}	CE, CL		0.75			µs
CE setup time	t_{ES}	CE, CL		0.75			µs
CE hold time	t_{EH}	CE, CL		0.75			µs
CE high level time	t_{CE}	CE				20	ms
Data latch transition time	t_{LC}					1.15	µs
Data output time	t_{DC}	DO, CL	Differs with the value of the pull-up resistor used.			0.46	µs
	t_{DH}	DO, CE				0.46	µs

DO pin operation

This IC incorporates a RAM data buffer that can hold up to 24 blocks of data. At the point when one block of data is written to this RAM, the IC issues a read request by switching the DO pin from high to low.
The DO pin always goes high for a fixed period (Tdo = 265 μs) after a readout and CE goes low. When all the data in the data buffer has been read out, the DO pin is held in the high state until a new block of data has been written to the RAM. If there is data that has not yet been read remaining in the data buffer, the DO pin goes low after the Tdo time has elapsed.
After a synchronization reset, the DO pin is held high until synchronization is established. It goes low at the point the IC synchronizes.

① When the DO pin is high following the 265 μs period (Tdo) after data is read out.
Here, the buffer is in the empty state, i.e. the state where new data has not been written. After this, when the DO pin goes low, applications are guaranteed to be able to read out that data without it being overwritten by new data if they start a readout operation within 480 ms of DO going low.

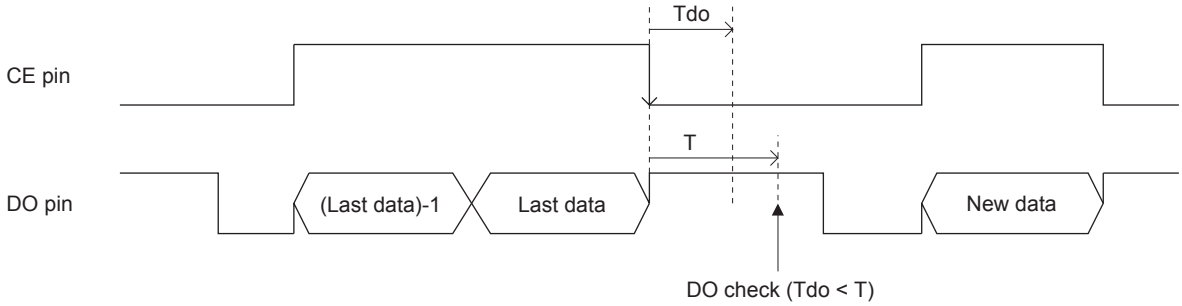

② When DO goes low 265 μs after data is read out
Here, there is data that has not been read out remaining in the data buffer. In this case, applications are guaranteed to be able to read out that data without it being overwritten by new data if they start a readout operation within 20 ms of DO going low. (Note that this is the worst case condition.)

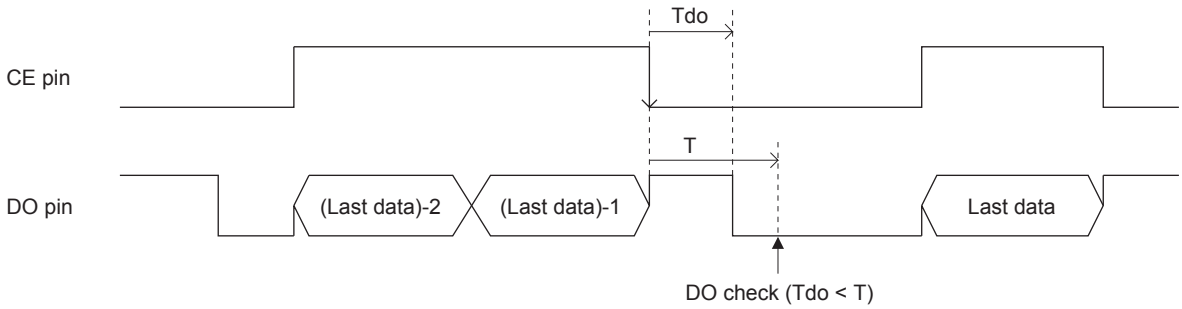

Notes :
1. Although an application can determine whether or not there is data remaining in the buffer by checking the DO level with the above timing, checking the RE and RF flags in the serial data is a preferable method.
2. Applications are not limited to reading out one block of data at a time, but rather can read out multiple blocks of data continuously as described above. When using this method, if an application references the RE and RF flags in the data while reading out data, it can determine the amount of data remaining. However, the length of the period for data readout (the period the CE pin remains high) must be kept under 20 ms.
3. If the DO pin is shared with other ICs that use the CCB interface, the application must identify which IC issued the readout request. One method is to read out data from the LC72722PMS and either check whether meaningful data has been read (if the LC72722PMS is not requesting a read, data consisting of all zeros will be read out) or check whether the DO level goes low within the 256 μs following the completion of the read (if the DO pin goes low, then the request was from another IC).

Sample Application circuit

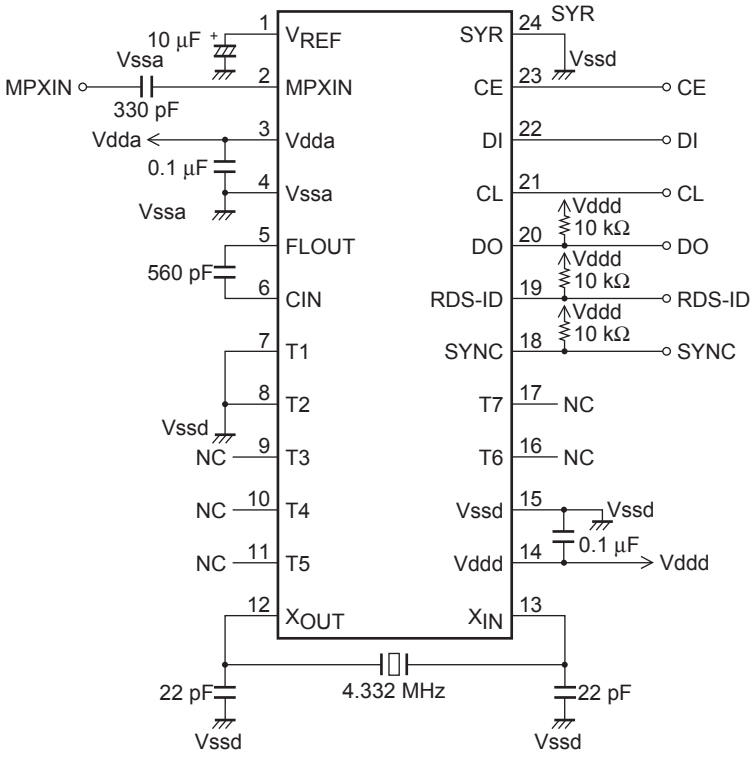

Caution : 1. Determine the value of the DO pin pull-up resistor based on the required serial data transfer speed.
2. If the SYR pin is unused, it must be connected to ground.

ORDERING INFORMATION

Device	Package	Shipping (Qty / Packing)
LC72722PMS-MPB-E	SOIC24 W / MFP24 (375 mil) (Pb-Free)	25 / Fan-Fold
LC72722PMS-TLM-E	SOIC24 W / MFP24 (375 mil) (Pb-Free)	1000 / Tape & Reel

† For information on tape and reel specifications, including part orientation and tape sizes, please refer to our Tape and Reel Packaging Specifications Brochure, BRD8011/D. http://www.onsemi.com/pub_link/Collateral/BRD8011-D.PDF

ON Semiconductor and the ON Semiconductor logo are trademarks of Semiconductor Components Industries, LLC dba ON Semiconductor or its subsidiaries in the United States and/or other countries. ON Semiconductor owns the rights to a number of patents, trademarks, copyrights, trade secrets, and other intellectual property. A listing of ON Semiconductor's product/patent coverage may be accessed at www.onsemi.com/site/pdf/Patent-Marking.pdf. ON Semiconductor reserves the right to make changes without further notice to any products herein. ON Semiconductor makes no warranty, representation or guarantee regarding the suitability of its products for any particular purpose, nor does ON Semiconductor assume any liability arising out of the application or use of any product or circuit, and specifically disclaims any and all liability, including without limitation special, consequential or incidental damages. Buyer is responsible for its products and applications using ON Semiconductor products, including compliance with all laws, regulations and safety requirements or standards, regardless of any support or applications information provided by ON Semiconductor. "Typical" parameters which may be provided in ON Semiconductor data sheets and/or specifications can and do vary in different applications and actual performance may vary over time. All operating parameters, including "Typicals" must be validated for each customer application by customer's technical experts. ON Semiconductor does not convey any license under its patent rights nor the rights of others. ON Semiconductor products are not designed, intended, or authorized for use as a critical component in life support systems or any FDA Class 3 medical devices or medical devices with a same or similar classification in a foreign jurisdiction or any devices intended for implantation in the human body. Should Buyer purchase or use ON Semiconductor products for any such unintended or unauthorized application, Buyer shall indemnify and hold ON Semiconductor and its officers, employees, subsidiaries, affiliates, and distributors harmless against all claims, costs, damages, and expenses, and reasonable attorney fees arising out of, directly or indirectly, any claim of personal injury or death associated with such unintended or unauthorized use, even if such claim alleges that ON Semiconductor was negligent regarding the design or manufacture of the part. ON Semiconductor is an Equal Opportunity/Affirmative Action Employer. This literature is subject to all applicable copyright laws and is not for resale in any manner.