FEBRUARY 2016

1Mx16 LOW VOLTAGE, ULTRA LOW POWER CMOS STATIC RAM

KEY FEATURES

- High-speed access time: 45ns, 55ns
- CMOS low power operation
  – Operating (typical):
    - 10.8mW (1.8V), 18mW (3.0V)
  – CMOS Standby (typical):
    - 48 µW (1.8V), 90 µW (3.0V)
- TTL compatible interface levels
- Single power supply
  –1.65V—1.98V Vdd (62/65WV102416EALL)
  – 2.2V--3.6V Vdd (62/65WV102416EBLL)
- Data control for upper and lower bytes
- Industrial and Automotive temperature support

DESCRIPTION

The *ISSI* IS62WV102416EALL/BLL and IS65WV102416EALL/BLL are Low Power, 16M bit static RAMs organized as 1024K words by 16bits. It is fabricated using *ISSI*'s high-performance CMOS technology. This highly reliable process coupled with innovative circuit design techniques, yields high-performance and low power consumption devices. When $\overline{CS1}$ is HIGH (deselected) or when CS2 is low (deselected) or when $\overline{CS1}$ is low , CS2 is high and both $\overline{LB}$ and $\overline{UB}$ are HIGH, the device assumes a standby mode at which the power dissipation can be reduced down with CMOS input levels.
Easy memory expansion is provided by using Chip Enable and Output Enable inputs. The active LOW Write Enable ($\overline{WE}$) controls both writing and reading of the memory. A data byte allows Upper Byte ($\overline{UB}$) and Lower Byte ($\overline{LB}$) access.
The IS62WV102416EALL/BLL and IS65WV102416EALL/BLL are packaged in the JEDEC standard 48-pin BGA (6mm x 8mm).

BLOCK DIAGRAM

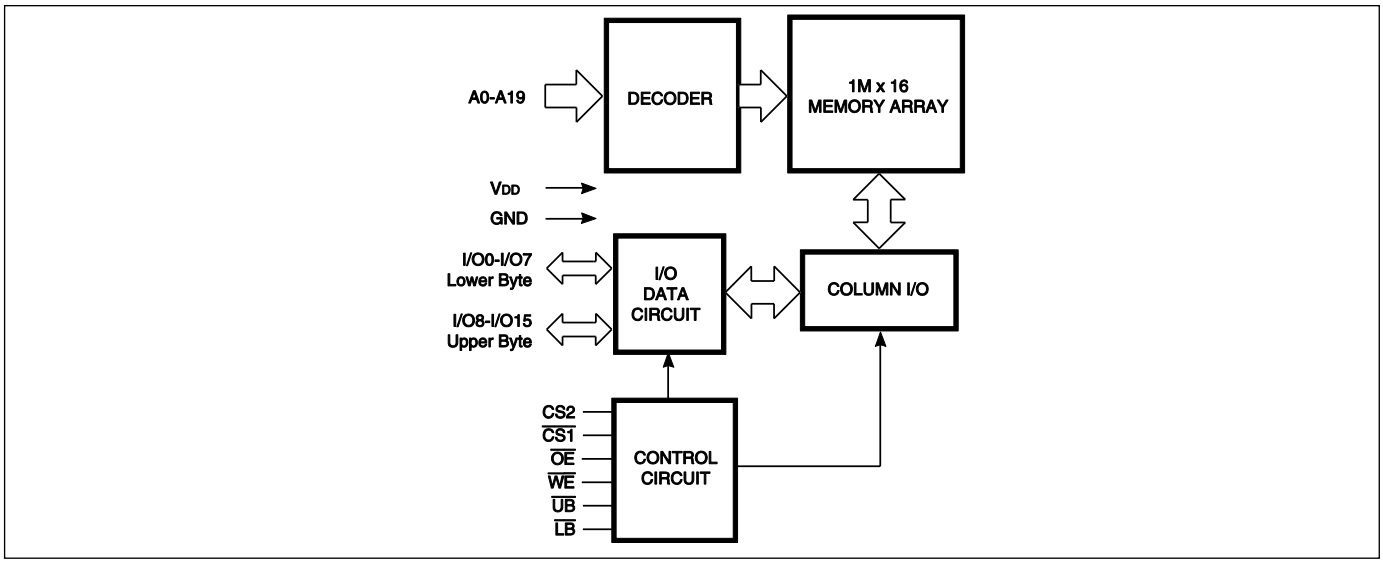

Copyright © 2016 Integrated Silicon Solution, Inc. All rights reserved. ISSI reserves the right to make changes to this specification and its products at any time without notice. ISSI assumes no liability arising out of the application or use of any information, products or services described herein. Customers are advised to obtain the latest version of this device specification before relying on any published information and before placing orders for products.

Integrated Silicon Solution, Inc. does not recommend the use of any of its products in life support applications where the failure or malfunction of the product can reasonably be expected to cause failure of the life support system or to significantly affect its safety or effectiveness. Products are not authorized for use in such applications unless Integrated Silicon Solution, Inc. receives written assurance to its satisfaction, that:
a.) the risk of injury or damage has been minimized;
b.) the user assume all such risks; and
c.) potential liability of Integrated Silicon Solution, Inc is adequately protected under the circumstances

Downloaded from Arrow.com.

PIN CONFIGURATIONS
48-PIN BGA

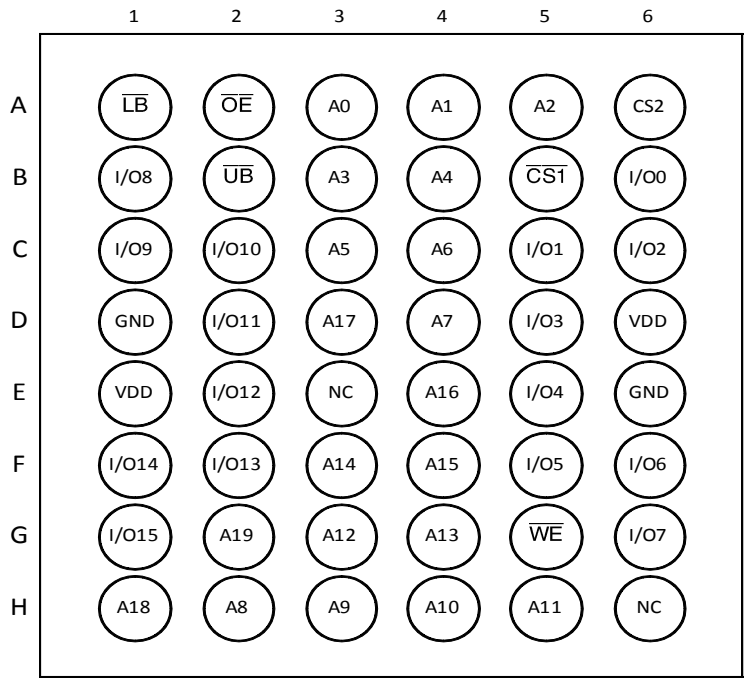

PIN DESCRIPTIONS – 2 CS OPTION

A0-A19	Address Inputs
I/O0-I/O15	Data Inputs/Outputs
$\overline{CS1}$, CS2	Chip Enable Inputs
$\overline{OE}$	Output Enable Input
$\overline{WE}$	Write Enable Input
$\overline{LB}$	Lower-byte Control (I/O0-I/O7)
$\overline{UB}$	Upper-byte Control (I/O8-I/O15)
NC	No Connection
VDD	Power
GND	Ground

Downloaded from Arrow.com.

FUNCTION DESCRIPTION

SRAM is one of random access memories. Each byte or word has an address and can be accessed randomly. SRAM has three different modes supported. Each function is described below with Truth Table.

STANDBY MODE

Device enters standby mode when deselected ($\overline{CS1}$ HIGH or CS2 LOW or both $\overline{UB}$ and $\overline{LB}$ are HIGH). The input and output pins (I/O0-15) are placed in a high impedance state. The current consumption in this mode will be either ISB1 or ISB2 depending on the input level. CMOS input in this mode will maximize saving power.

WRITE MODE

Write operation issues with Chip selected ($\overline{CS1}$ LOW and CS2 HIGH) and Write Enable ($\overline{WE}$) input LOW. The input and output pins(I/O0-15) are in data input mode. Output buffers are closed during this time even if $\overline{OE}$ is LOW. $\overline{UB}$ and $\overline{LB}$ enables a byte write feature. By enabling $\overline{LB}$ LOW, data from I/O pins (I/O0 through I/O7) are written into the location specified on the address pins. And with $\overline{UB}$ being LOW, data from I/O pins (I/O8 through I/O15) are written into the location.

READ MODE

Read operation issues with Chip selected ($\overline{CS1}$ LOW and CS2 HIGH) and Write Enable ($\overline{WE}$) input HIGH. When $\overline{OE}$ is LOW, output buffer turns on to make data output. Any input to I/O pins during READ mode is not permitted. $\overline{UB}$ and $\overline{LB}$ enables a byte read feature. By enabling $\overline{LB}$ LOW, data from memory appears on I/O0-7. And with $\overline{UB}$ being LOW, data from memory appears on I/O8-15.

In the READ mode, output buffers can be turned off by pulling $\overline{OE}$ HIGH. In this mode, internal device operates as READ but I/Os are in a high impedance state. Since device is in READ mode, active current is used.

TRUTH TABLE

Mode	$\overline{CS1}$	CS2	$\overline{WE}$	$\overline{OE}$	$\overline{LB}$	$\overline{UB}$	I/O0-I/O7	I/O8-I/O15	VDD Current
Not Selected	H	X	X	X	X	X	High-Z	High-Z	ISB1,ISB2
	X	L	X	X	X	X	High-Z	High-Z	
	X	X	X	X	H	H	High-Z	High-Z	
Output Disabled	L	H	H	H	L	X	High-Z	High-Z	ICC
	L	H	H	H	X	L	High-Z	High-Z	
Read	L	H	H	L	L	H	DOUT	High-Z	ICC
	L	H	H	L	H	L	High-Z	DOUT	
	L	H	H	L	L	L	DOUT	DOUT	
Write	L	H	L	X	L	H	DIN	High-Z	ICC
	L	H	L	X	H	L	High-Z	DIN	
	L	H	L	X	L	L	DIN	DIN	

Downloaded from Arrow.com.

ABSOLUTE MAXIMUM RATINGS AND OPERATING RANGE

ABSOLUTE MAXIMUM RATINGS(1)

Symbol	Parameter	Value	Unit
Vterm	Terminal Voltage with Respect to GND	–0.2 to +3.9(V_{DD}+0.3V)	V
tBIAS	Temperature Under Bias	–55 to +125	°C
V_{DD}	V_{DD} Related to GND	–0.2 to +3.9(V_{DD}+0.3V)	V
tStg	Storage Temperature	–65 to +150	°C
I_{OUT}	DC Output Current (LOW)	20	mA

Notes:

1. Stress greater than those listed under ABSOLUTE MAXIMUM RATINGS may cause permanent damage to the device. This is a stress rating only and functional operation of the device at these or any other conditions above those indicated in the operational sections of this specification is not implied. Exposure to absolute maximum rating conditions for extended periods may affect reliability.

OPERATING RANGE(1)

Range	Device Marking	Ambient Temperature	VDD(min)	VDD(typ)	VDD(max)
Commercial	IS62WV102416EALL	0°C to +70°C	1.65V	1.8V	1.98V
Industrial	IS62WV102416EALL	-40°C to +85°C	1.65V	1.8V	1.98V
Automotive	IS65WV102416EALL	-40°C to +125°C	1.65V	1.8V	1.98V
Commercial	IS62WV102416EBLL	0°C to +70°C	2.2V	3.3V	3.6V
Industrial	IS62WV102416EBLL	-40°C to +85°C	2.2V	3.3V	3.6V
Automotive	IS65WV102416EBLL	-40°C to +125°C	2.2V	3.3V	3.6V

Note:
1. Full device AC operation assumes a 100 µs ramp time from 0 to Vcc(min) and 200 µs wait time after Vcc stabilization.

PIN CAPACITANCE (1)

Parameter	Symbol	Test Condition	Max	Units
Input capacitance	C_{IN}	T_A = 25°C, f = 1 MHz, V_{DD} = V_{DD}(typ)	10	pF
DQ capacitance (IO0–IO15)	$C_{I/O}$		10	pF

Note:
1. These parameters are guaranteed by design and tested by a sample basis only.

THERMAL CHARACTERISTICS (1)

Parameter	Symbol	Rating	Units
Thermal resistance from junction to ambient (airflow = 0m/s)	$R_{\theta JA}$	43.05	°C/W
Thermal resistance from junction to case	$R_{\theta JC}$	5.75	°C/W

Note:
1. These parameters are guaranteed by design and tested by a sample basis only.

Downloaded from Arrow.com.

ELECTRICAL CHARACTERISTICS

IS62(5)WV102416EALL DC ELECTRICAL CHARACTERISTICS-I (OVER THE OPERATING RANGE)

Symbol	Parameter	Test Conditions	Min.	Max.	Unit
V_{OH}	Output HIGH Voltage	I_{OH} = -0.1 mA	1.4	—	V
V_{OL}	Output LOW Voltage	I_{OL} = 0.1 mA	—	0.2	V
V_{IH}(1)	Input HIGH Voltage		1.4	V_{DD} + 0.2	V
V_{IL}(1)	Input LOW Voltage		–0.2	0.4	V
I_{LI}	Input Leakage	GND < V_{IN} < V_{DD}	–1	1	µA
I_{LO}	Output Leakage	GND < V_{IN} < V_{DD}, Output Disabled	–1	1	µA

Notes:
1. VILL(min) = -1.0V AC (pulse width < 10ns). Not 100% tested.
   VIHH (max) = VDD + 1.0V AC (pulse width < 10ns). Not 100% tested.

IS62(5)WV102416EBLL DC ELECTRICAL CHARACTERISTICS-I (OVER THE OPERATING RANGE)

Symbol	Parameter	Test Conditions	Min.	Max.	Unit
V_{OH}	Output HIGH Voltage	2.2 ≤ V_{DD} < 2.7, I_{OH} = -0.1 mA	2.0	—	V
		2.7 ≤ V_{DD} ≤ 3.6, I_{OH} = -1.0 mA	2.4	—	V
V_{OL}	Output LOW Voltage	2.2 ≤ V_{DD} < 2.7, I_{OL} = 0.1 mA	—	0.4	V
		2.7 ≤ V_{DD} ≤ 3.6, I_{OL} = 2.1 mA	—	0.4	V
V_{IH}(1)	Input HIGH Voltage	2.2 ≤ V_{DD} < 2.7	1.8	V_{DD} + 0.3	V
		2.7 ≤ V_{DD} ≤ 3.6	2.2	V_{DD} + 0.3	V
V_{IL}(1)	Input LOW Voltage	2.2 ≤ V_{DD} < 2.7	–0.3	0.6	V
		2.7 ≤ V_{DD} ≤ 3.6	–0.3	0.8	V
I_{LI}	Input Leakage	GND < V_{IN} < V_{DD}	–1	1	µA
I_{LO}	Output Leakage	GND < V_{IN} < V_{DD}, Output Disabled	–1	1	µA

Notes:
1. VILL(min) = -2.0V AC (pulse width < 10ns). Not 100% tested.
   VIHH (max) = VDD + 2.0V AC (pulse width < 10ns). Not 100% tested.

Downloaded from Arrow.com.

IS62(5)WV102416EALL DC ELECTRICAL CHARACTERISTICS-II FOR POWER (OVER THE OPERATING RANGE)

Symbol	Parameter	Test Conditions	Grade	Typ.	Max.	Unit
ICC	V_{DD} Dynamic Operating Supply Current	$V_{DD}=V_{DD}(max)$, $I_{OUT}=0mA$, $f=f_{MAX}$	Com.	6	12	mA
			Ind.	-	12	
			Auto.	-	12	
ICC1	V_{DD} Static Operating Supply Current	$V_{DD}=V_{DD}(max)$, I_{OUT} = 0mA, f=0Hz	Com.	3	6	mA
			Ind.	-	6	
			Auto.	-	6	
ISB1	CMOS Standby Current (CMOS Inputs)	$V_{DD}=V_{DD}(max)$, (1) 0V ≤ CS2 ≤ 0.2V or (2) $\overline{CS1}$ ≥ V_{DD} - 0.2V, CS2 ≥ V_{DD} - 0.2V or (3) $\overline{LB}$ and $\overline{UB}$ ≥ V_{DD}- 0.2V $\overline{CS1}$ ≤ 0.2V, CS2 ≥ V_{DD} - 0.2V	Com.	30	50	µA
			Ind.	-	65	µA
			Auto.	-	165	µA

Note:
Typical values are included for reference only and are not guaranteed or tested. Typical values are measured at VDD = VDD(typ), TA = 25°C

IS62(5)WV102416EBLL DC ELECTRICAL CHARACTERISTICS-II FOR POWER (OVER THE OPERATING RANGE)

Symbol	Parameter	Test Conditions	Grade	Typ.	Max.	Unit
ICC	V_{DD} Dynamic Operating Supply Current	$V_{DD}=V_{DD}(max)$, $I_{OUT}=0mA$, $f=f_{MAX}$	Com.	6	12	mA
			Ind.	-	12	
			Auto.	-	12	
ICC1	V_{DD} Static Operating Supply Current	$V_{DD}=V_{DD}(max)$, I_{OUT} = 0mA, f=0Hz	Com.	3	6	mA
			Ind.	-	6	
			Auto.	-	6	
ISB1	CMOS Standby Current (CMOS Inputs)	$V_{DD}=V_{DD}(max)$, (1) 0V ≤ CS2 ≤ 0.2V or (2) $\overline{CS1}$ ≥ V_{DD} - 0.2V, CS2 ≥ V_{DD} - 0.2V or (3) $\overline{LB}$ and $\overline{UB}$ ≥ V_{DD}- 0.2V $\overline{CS1}$ ≤ 0.2V, CS2 ≥ V_{DD} - 0.2V	Com.	30	50	µA
			Ind.	-	65	µA
			Auto.	-	165	µA

Note:
Typical values are included for reference only and are not guaranteed or tested. Typical values are measured at VDD = VDD(typ), TA = 25°C

Downloaded from Arrow.com.

AC CHARACTERISTICS[6] (OVER OPERATING RANGE)

READ CYCLE AC CHARACTERISTICS

Parameter	Symbol	45ns		55ns		unit	notes
		Min	Max	Min	Max		
Read Cycle Time	tRC	45	-	55	-	ns	1,5
Address Access Time	tAA	-	45	-	55	ns	1
Output Hold Time	tOHA	8	-	8	-	ns	1
$\overline{CS1}$, CS2 Access Time	tACS1/tACS2	-	45	-	55	ns	1
$\overline{OE}$ Access Time	tDOE	-	22	-	25	ns	1
$\overline{OE}$ to High-Z Output	tHZOE	-	18	-	18	ns	2
$\overline{OE}$ to Low-Z Output	tLZOE	5	-	5	-	ns	2
$\overline{CS1}$, CS2 to High-Z Output	tHZCS//tHZCS2	-	18	-	18	ns	2
$\overline{CS1}$, CS2 to Low-Z Output	tLZCS/tLZCS2	10	-	10	-	ns	2
$\overline{LB}$, $\overline{UB}$ Access Time	tBA	-	45	-	55	ns	1
$\overline{LB}$, $\overline{UB}$ to High-Z Output	tHZB	-	18	-	18	ns	2
$\overline{LB}$, $\overline{UB}$ to Low-Z Output	tLZB	10	-	10	-	ns	2

WRITE CYCLE AC CHARACTERISTICS

Parameter	Symbol	45ns		55ns		unit	notes
		Min	Max	Min	Max		
Write Cycle Time	tWC	45	-	55	-	ns	1,3,5
$\overline{CS1}$,CS2 to Write End	tSCS1/tSCS2	35	-	40	-	ns	1,3
Address Setup Time to Write End	tAW	35	-	40	-	ns	1,3
Address Hold from Write End	tHA	0	-	0	-	ns	1,3
Address Setup Time	tSA	0	-	0	-	ns	1,3
$\overline{LB}$, /$\overline{UB}$ Valid to End of Write	tPWB	35	-	40	-	ns	1,3
$\overline{WE}$ Pulse Width	tPWE	35	-	40	-	ns	1,3,4
Data Setup to Write End	tSD	28	-	28	-	ns	1,3
Data Hold from Write End	tHD	0	-	0	-	ns	1,3
$\overline{WE}$ LOW to High-Z Output	tHZWE	-	18	-	18	ns	2,3
$\overline{WE}$ HIGH to Low-Z Output	tLZWE	10	-	10	-	ns	2,3

Notes:
1. Tested with the load in Figure 1.
2. Tested with the load in Figure 2. Transition is measured ±500 mV from steady-state voltage. tHZOE, tHZCS, tHZB, and tHZWE transitions are measured when the output enters a high impedance state. Not 100% tested.
3. The internal write time is defined by the overlap of $\overline{CS1}$=LOW, CS2=HIGH, ($\overline{UB}$ or $\overline{LB}$)=LOW, and $\overline{WE}$=LOW. All four conditions must be in valid states to initiate a Write, but any condition can go inactive to terminate the Write. The Data Input Setup and Hold timing are referenced to the rising or falling edge of the signal that terminates the write.
4. tPWE > tHZWE + tSD when OE is LOW.
5. Address inputs must meet V_{IH} and V_{IL} SPEC during this period. Any glitch or unknown inputs are not permitted. Unknown input with standby mode is acceptable.
6. Data retention characteristics are defined later in DATA RETENTION CHARACTERISTICS.

Downloaded from Arrow.com.

AC TEST CONDITIONS (OVER THE OPERATING RANGE)

Parameter	Symbol	Conditions	Units
Input Rise Time	T_R	1.0	V/ns
Input Fall Time	T_F	1.0	V/ns
Output Timing Reference Level	V_{REF}	½ V_{TM}	V
Output Load Conditions	Refer to Figure 1 and 2		

OUTPUT LOAD CONDITIONS FIGURES

Figure1

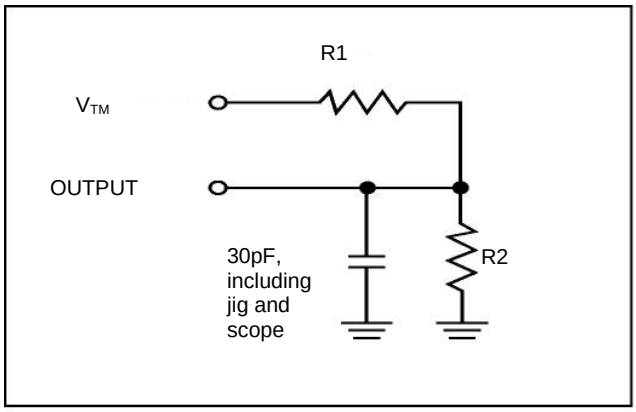

Figure2

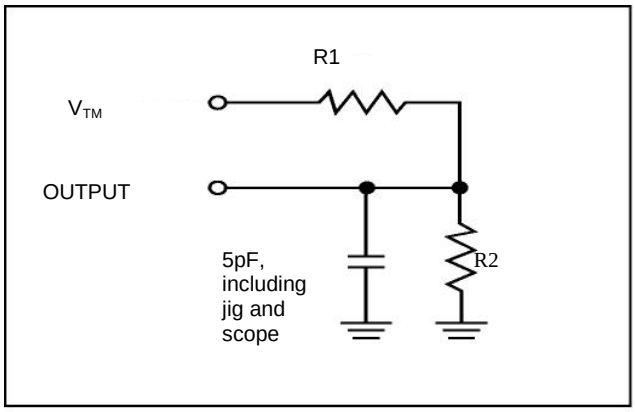

Parameters	V_{DD}=1.65~1.98V	V_{DD}=2.2~2.7V	V_{DD}=2.7~3.6V
R1	13500Ω	16667Ω	1103Ω
R2	10800Ω	15385Ω	1554Ω
V_{TM}	VDD	VDD	VDD

Downloaded from Arrow.com.

TIMING DIAGRAM

READ CYCLE NO. 1[1,2] (ADDRESS CONTROLLED) ($\overline{CS1}$=$\overline{OE}$=VIL, CS2=$\overline{WE}$=VIH)

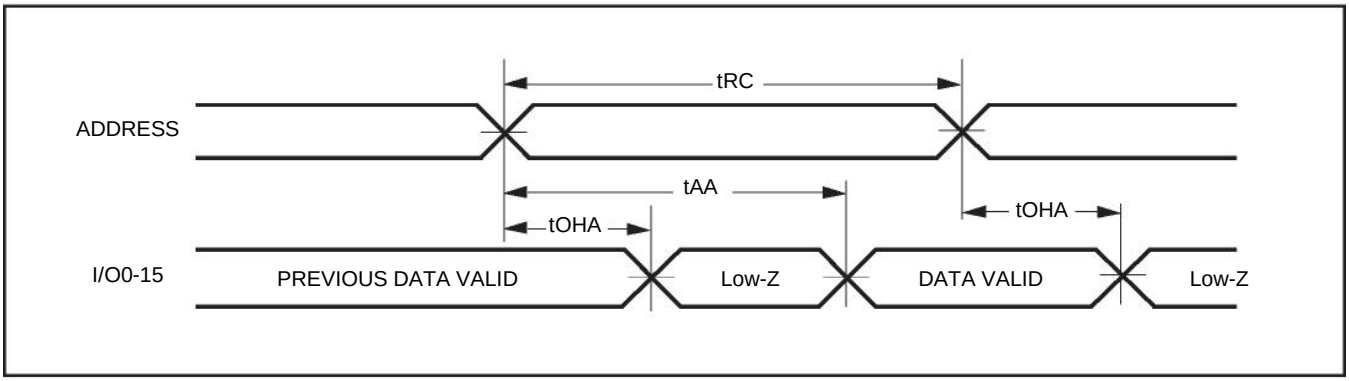

READ CYCLE NO. 2[1,3] ($\overline{CS1}$, CS2, $\overline{OE}$, AND $\overline{UB}$ & $\overline{LB}$ CONTROLLED)

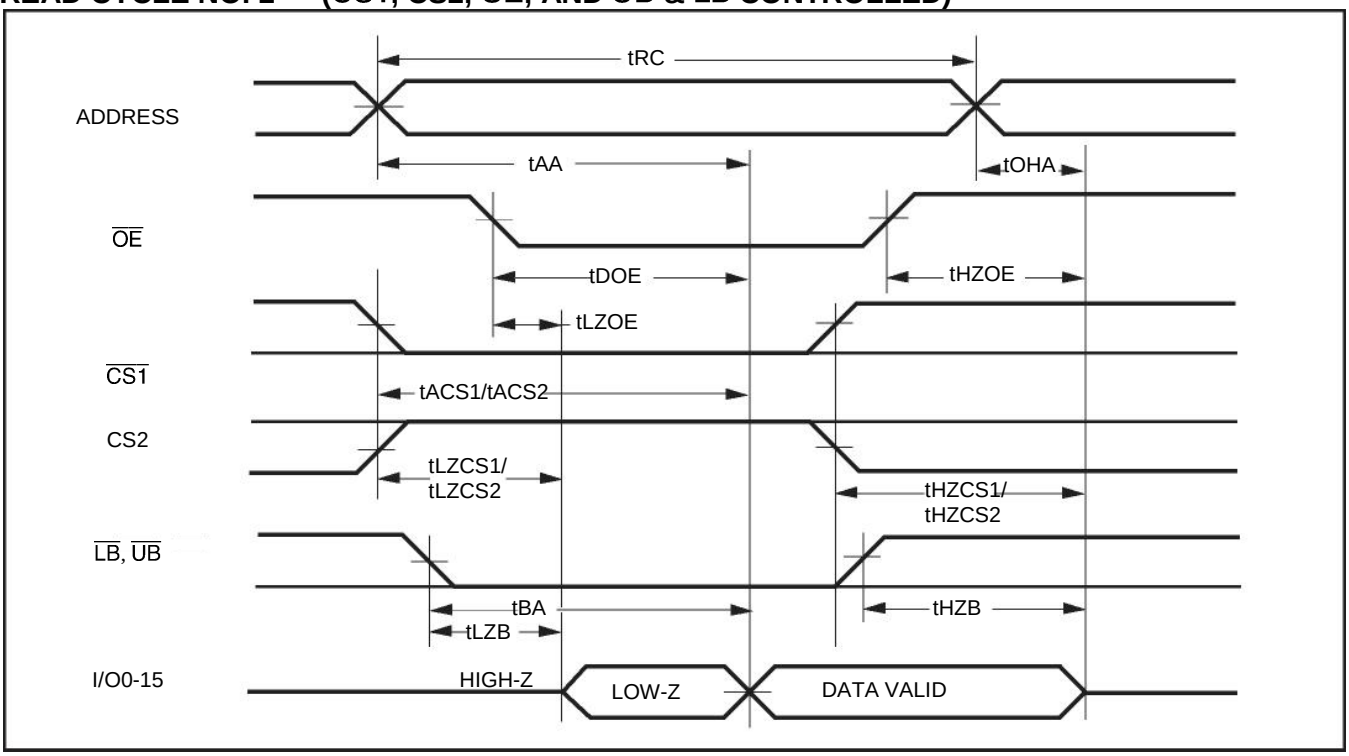

Notes:
1. $\overline{WE}$ is HIGH for Read Cycle.
2. The device is continuously selected. $\overline{OE}$, $\overline{CS1}$, $\overline{UB}$, or $\overline{LB}$=VIL.CS2=$\overline{WE}$=VIH.
3. Address is valid prior to or coincident with $\overline{CS1}$ LOW transition.

Downloaded from Arrow.com.

WRITE CYCLE NO. 1 ($\overline{CS1}$ CONTROLLED, $\overline{OE}$ = HIGH OR LOW)

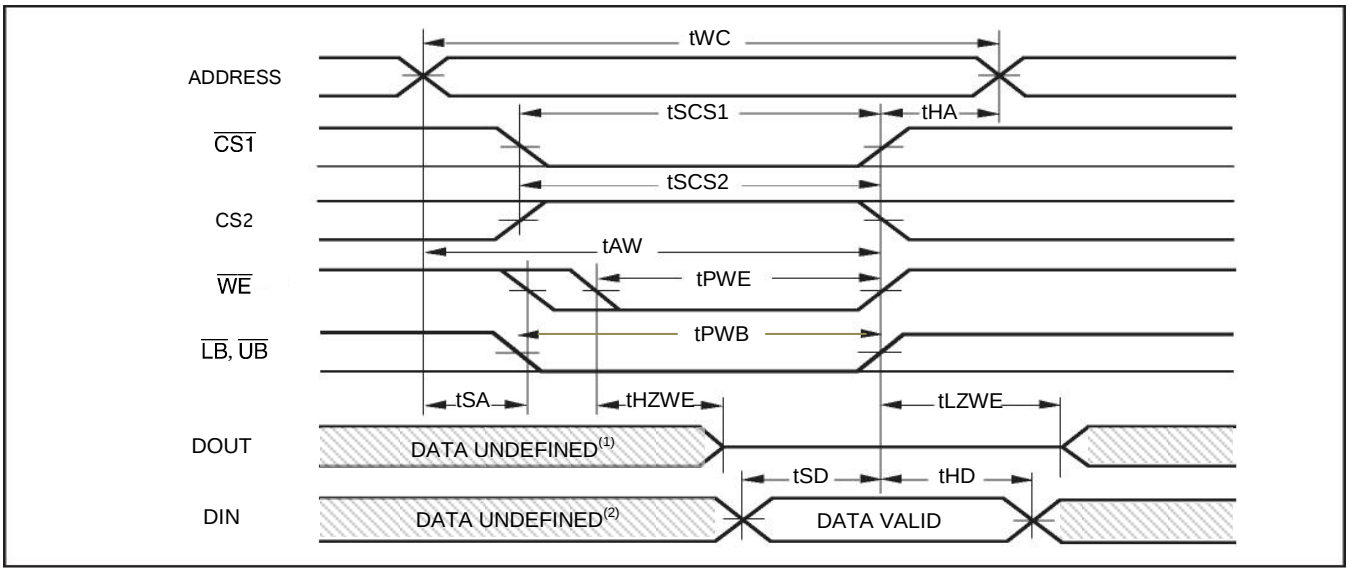

Notes:
1. tHZWE is based on the assumption when tSA=0nS after READ operation. Actual DOUT for tHZWE may not appear if $\overline{OE}$ goes high before Write Cycle. tHZOE is the time DOUT goes to High-Z after $\overline{OE}$ goes high.
2. During this period the I/Os are in output state. Do not apply input signals.

WRITE CYCLE NO. 2 ($\overline{WE}$ CONTROLLED: $\overline{OE}$ IS HIGH DURING WRITE CYCLE)

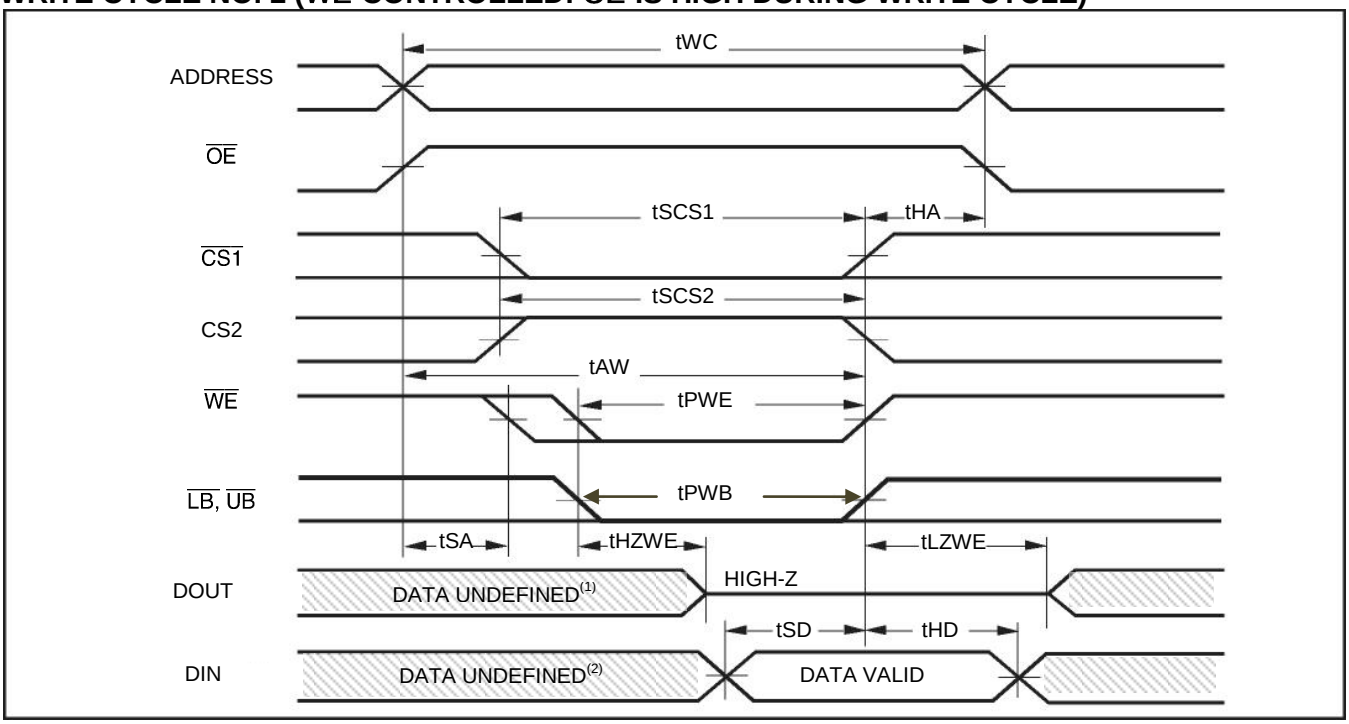

Notes:
1. tHZWE is based on the assumption when tSA=0nS after READ operation. Actual DOUT for tHZWE may not appear if $\overline{OE}$ goes high before Write Cycle. tHZOE is the time DOUT goes to High-Z after $\overline{OE}$ goes high.
2. During this period the I/Os are in output state. Do not apply input signals.

Downloaded from Arrow.com.

WRITE CYCLE NO. 3 ($\overline{WE}$ CONTROLLED: $\overline{OE}$ IS LOW DURING WRITE CYCLE)

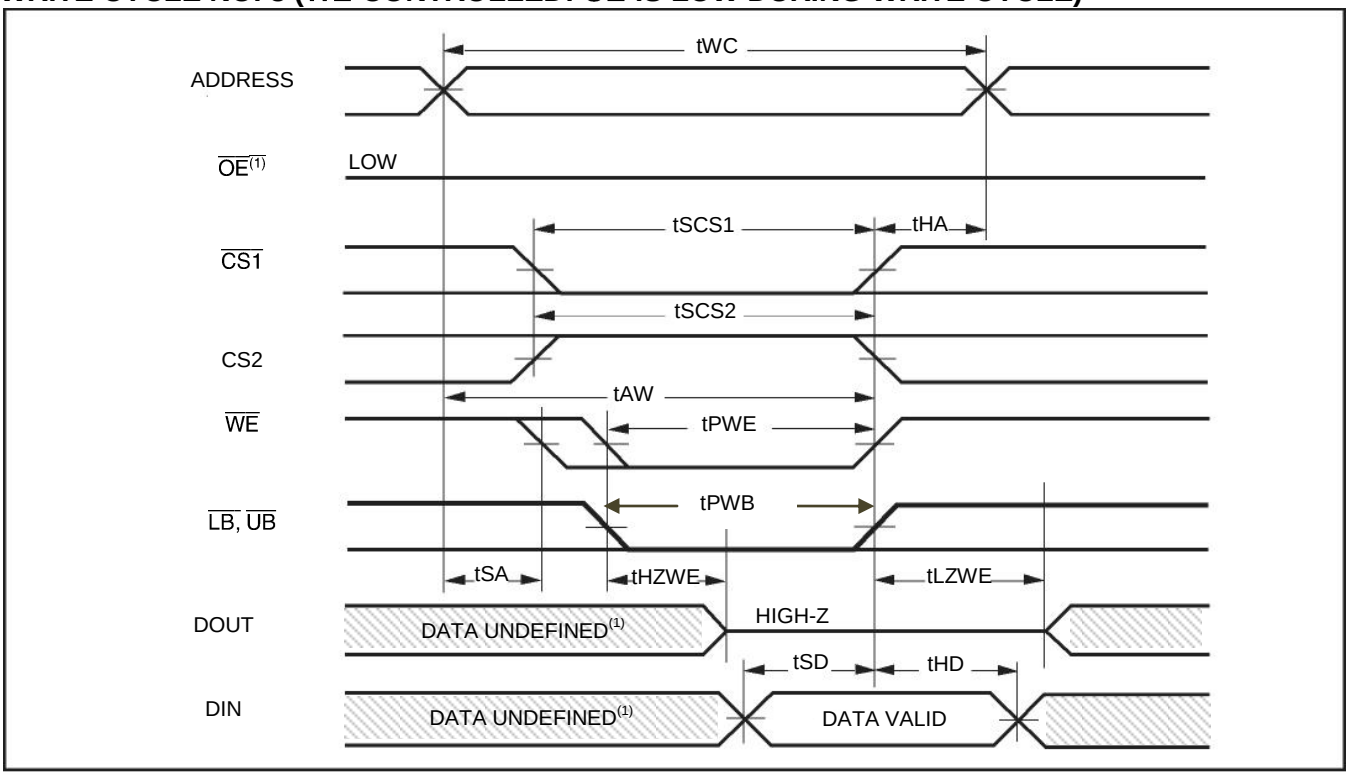

Notes:

1. If $\overline{OE}$ is low during write cycle, tHZWE must be met in the application. Do not apply input signal during this period. Data output from the previous READ operation will drive IO BUS.

Downloaded from Arrow.com.

WRITE CYCLE NO. 4 ($\overline{UB}$ & $\overline{LB}$ CONTROLLED)

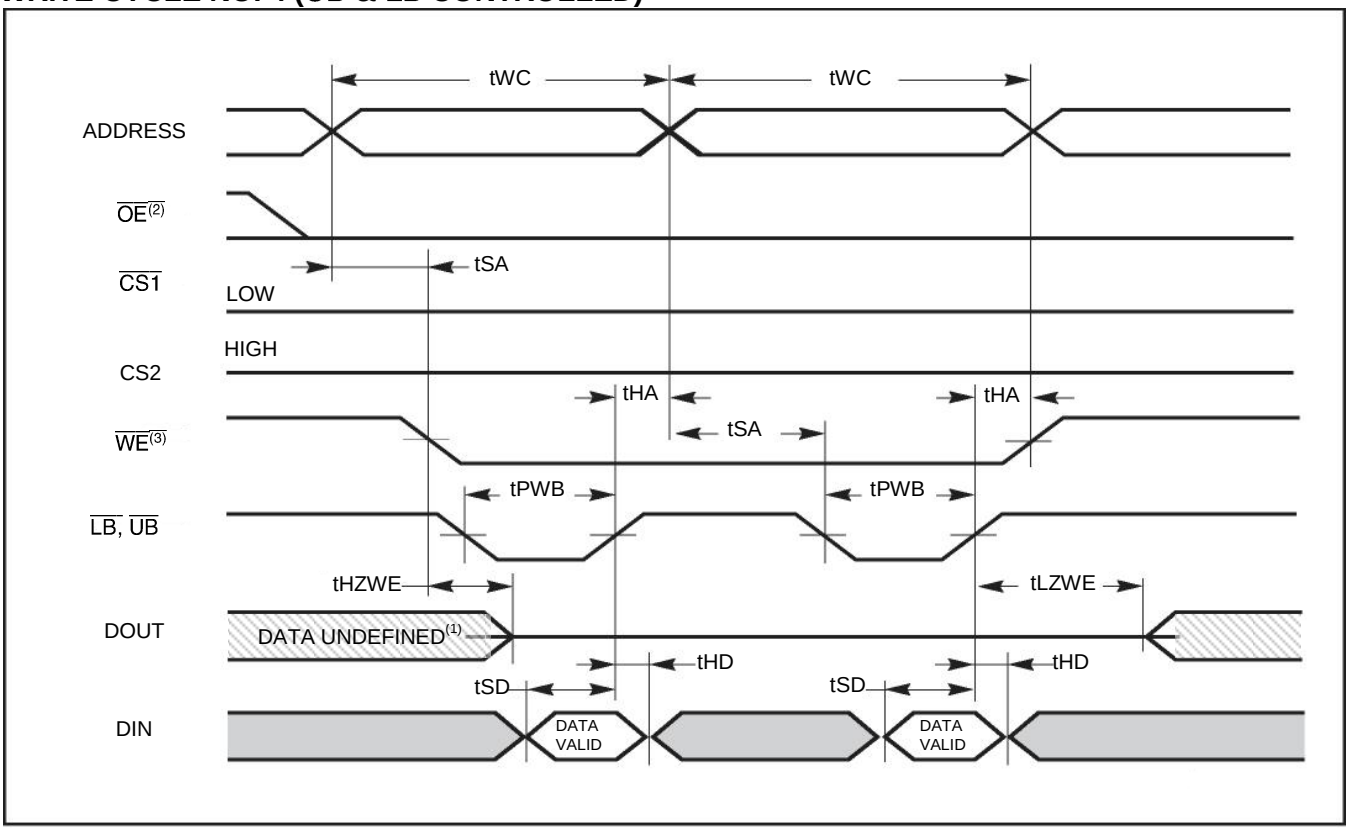

Notes:

1. If $\overline{OE}$ is low during write cycle, tHZWE must be met in the application. Do not apply input signal during this period. Data output from the previous READ operation will drive IO BUS.
2. Due to the restriction of note1, $\overline{OE}$ is recommended to be HIGH during write period.
3. Note $\overline{WE}$ stays LOW in this example. If $\overline{WE}$ toggles, tPWE and tHZWE must be considered.

Downloaded from Arrow.com.

DATA RETENTION CHARACTERISTICS

Symbol	Parameter	Test Condition	OPTION	Min.	Typ.(2)	Max.	Unit
V_{DR}	V_{DD} for Data Retention	See Data Retention Waveform	IS62(5)WV102416EALL	1.5		-	V
			IS62(5)WV102416EBLL	1.5		-	V
I_{DR}	Data Retention Current	V_{DD}= V_{DR}(min), (1) 0V ≤ CS2 ≤ 0.2V, or (2) $\overline{CS1}$ ≥ V_{DD} – 0.2V, CS2 ≥ V_{DD} - 0.2V (3) $\overline{LB}$ and $\overline{UB}$ ≥ V_{DD} -0.2V, $\overline{CS1}$ ≤ 0.2V, CS2 ≥ V_{DD} - 0.2V	Com.	-	-	50	uA
			Ind.	-	-	65	
			Auto	-	-	165	
t_{SDR}	Data Retention Setup Time	See Data Retention Waveform		0	-	-	ns
t_{RDR}	Recovery Time	See Data Retention Waveform		tRC	-	-	ns

Note:
1. If $\overline{CS1}$>VDD–0.2V, all other inputs including CS2 and $\overline{UB}$ and $\overline{LB}$ must meet this condition.
2. Typical values are measured at VDD=VDR(min), TA = 25℃ and not 100% tested.

DATA RETENTION WAVEFORM ($\overline{CS1}$ CONTROLLED)

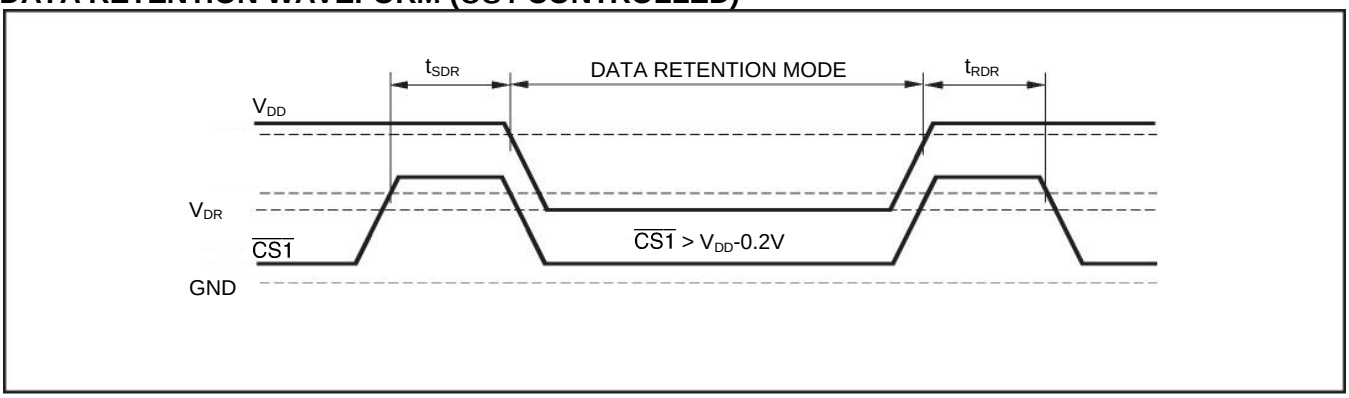

DATA RETENTION WAVEFORM (CS2 CONTROLLED)

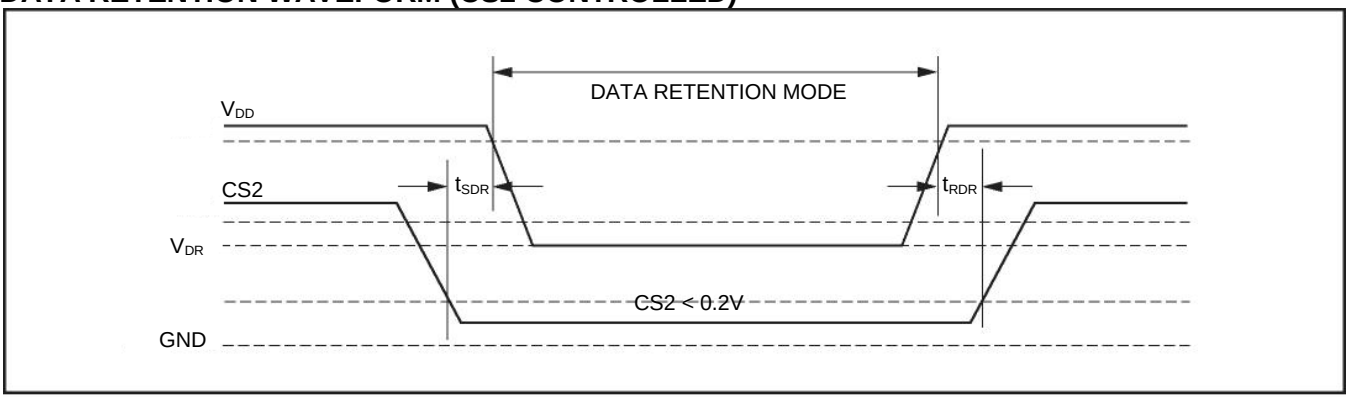

Downloaded from Arrow.com.

ORDERING INFORMATION

1.65V~1.98V Industrial Range (-40°C to +85°C)

Speed (ns)	Order Part No	Package
55	IS62WV102416EALL-55BI	48-pin BGA
	IS62WV102416EALL-55BLI	48-pin BGA, Lead-free

1.65V~1.98V Automotive (A3) Range (-40°C to +125°C)

Speed (ns)	Order Part No	Package
55	IS65WV102416EALL-55BA3	48-pin BGA
	IS65WV102416EALL-55BLA3	48-pin BGA, Lead-free

2.2V~3.6V Industrial Range (-40°C to +85°C)

Speed (ns)	Order Part No	Package
45	IS62WV102416EBLL-45BI	48-pin BGA
	IS62WV102416EBLL-45BLI	48-pin BGA, Lead-free
55	IS62WV102416EBLL-55BLI	48-pin BGA, Lead-free

2.2V~3.6V Automotive (A3) Range (-40°C to +125°C)

Speed (ns)	Order Part No	Package
55	IS65WV102416EBLL-55BA3	48-pin BGA
	IS65WV102416EBLL-55BLA3	48-pin BGA, Lead-free

Downloaded from Arrow.com.

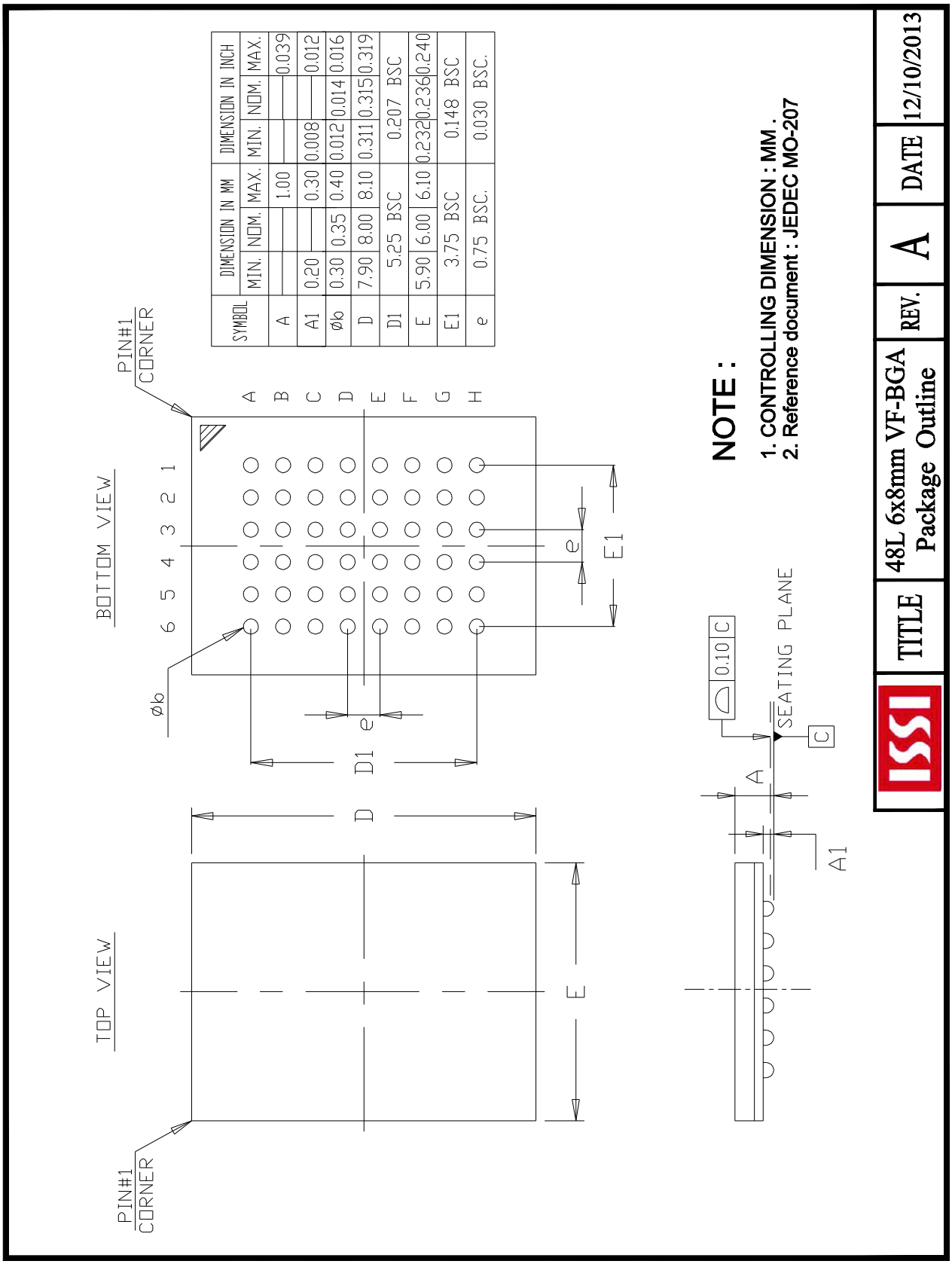

SYMBOL	DIMENSION IN MM			DIMENSION IN INCH		
	MIN.	NOM.	MAX.	MIN.	NOM.	MAX.
A	—	—	1.00	—	—	0.039
A1	0.20	—	0.30	0.008	—	0.012
Øb	0.30	0.35	0.40	0.012	0.014	0.016
D	7.90	8.00	8.10	0.311	0.315	0.319
D1	5.25 BSC			0.207 BSC		
E	5.90	6.00	6.10	0.232	0.236	0.240
E1	3.75 BSC			0.148 BSC		
e	0.75 BSC.			0.030 BSC.		

Downloaded from Arrow.com.