S32K1XX

S32K1xx Data Sheet

Notes

- The following two attachments are available with the Datasheet:
  - S32K1xx_Orderable_Part_Number_ List.xlsx
  - S32K1xx_Power_Modes_Configuration.xlsx

Key Features

- Operating characteristics
  - Voltage range: 2.7 V to 5.5 V
  - Ambient temperature range: -40 °C to 105 °C for HSRUN mode, -40 °C to 125 °C for RUN mode
- Arm™ Cortex-M4F/M0+ core, 32-bit CPU
  - Supports up to 112 MHz frequency (HSRUN mode) with 1.25 Dhrystone MIPS per MHz
  - Arm Core based on the Armv7 Architecture and Thumb®-2 ISA
  - Integrated Digital Signal Processor (DSP)
  - Configurable Nested Vectored Interrupt Controller (NVIC)
  - Single Precision Floating Point Unit (FPU)
- Clock interfaces
  - 4 - 40 MHz fast external oscillator (SOSC) with up to 50 MHz DC external square input clock in external clock mode
  - 48 MHz Fast Internal RC oscillator (FIRC)
  - 8 MHz Slow Internal RC oscillator (SIRC)
  - 128 kHz Low Power Oscillator (LPO)
  - Up to 112 MHz (HSRUN) System Phased Lock Loop (SPLL)
  - Up to 20 MHz TCLK and 25 MHz SWD_CLK
  - 32 kHz Real Time Counter external clock (RTC_CLKIN)
- Power management
  - Low-power Arm Cortex-M4F/M0+ core with excellent energy efficiency
  - Power Management Controller (PMC) with multiple power modes: HSRUN, RUN, STOP, VLPR, and VLPS. Note: CSEc (Security) or EEPROM writes/erase will trigger error flags in HSRUN mode (112 MHz) because this use case is not allowed to execute simultaneously. The device will need to switch to RUN mode (80 Mhz) to execute CSEc (Security) or EEPROM writes/erase.
  - Clock gating and low power operation supported on specific peripherals.
- Memory and memory interfaces
  - Up to 2 MB program flash memory with ECC
  - 64 KB FlexNVM for data flash memory with ECC and EEPROM emulation. Note: CSEc (Security) or EEPROM writes/erase will trigger error flags in HSRUN mode (112 MHz) because this use case is not allowed to execute simultaneously. The device will need to switch to RUN mode (80 MHz) to execute CSEc (Security) or EEPROM writes/erase.
  - Up to 256 KB SRAM with ECC
  - Up to 4 KB of FlexRAM for use as SRAM or EEPROM emulation
  - Up to 4 KB Code cache to minimize performance impact of memory access latencies
  - QuadSPI with HyperBus™ support
- Mixed-signal analog
  - Up to two 12-bit Analog-to-Digital Converter (ADC) with up to 32 channel analog inputs per module
  - One Analog Comparator (CMP) with internal 8-bit Digital to Analog Converter (DAC)
- Debug functionality
  - Serial Wire JTAG Debug Port (SWJ-DP) combines
  - Debug Watchpoint and Trace (DWT)
  - Instrumentation Trace Macrocell (ITM)
  - Test Port Interface Unit (TPIU)
  - Flash Patch and Breakpoint (FPB) Unit
- Human-machine interface (HMI)
  - Up to 156 GPIO pins with interrupt functionality
  - Non-Maskable Interrupt (NMI)

NXP reserves the right to change the production detail specifications as may be required to permit improvements in the design of its products.

- Communications interfaces
  - Up to three Low Power Universal Asynchronous Receiver/Transmitter (LPUART/LIN) modules with DMA support and low power availability
  - Up to three Low Power Serial Peripheral Interface (LPSPI) modules with DMA support and low power availability
  - Up to two Low Power Inter-Integrated Circuit (LPI2C) modules with DMA support and low power availability
  - Up to three FlexCAN modules (with optional CAN-FD support)
  - FlexIO module for emulation of communication protocols and peripherals (UART, I2C, SPI, I2S, LIN, PWM, etc).
  - Up to one 10/100Mbps Ethernet with IEEE1588 support and two Synchronous Audio Interface (SAI) modules.
- Safety and Security
  - Cryptographic Services Engine (CSEc) implements a comprehensive set of cryptographic functions as described in the SHE (Secure Hardware Extension) Functional Specification. Note: CSEc (Security) or EEPROM writes/erase will trigger error flags in HSRUN mode (112 MHz) because this use case is not allowed to execute simultaneously. The device will need to switch to RUN mode (80 MHz) to execute CSEc (Security) or EEPROM writes/erase.
  - 128-bit Unique Identification (ID) number
  - Error-Correcting Code (ECC) on flash and SRAM memories
  - System Memory Protection Unit (System MPU)
  - Cyclic Redundancy Check (CRC) module
  - Internal watchdog (WDOG)
  - External Watchdog monitor (EWM) module
- Timing and control
  - Up to eight independent 16-bit FlexTimers (FTM) modules, offering up to 64 standard channels (IC/OC/PWM)
  - One 16-bit Low Power Timer (LPTMR) with flexible wake up control
  - Two Programmable Delay Blocks (PDB) with flexible trigger system
  - One 32-bit Low Power Interrupt Timer (LPIT) with 4 channels
  - 32-bit Real Time Counter (RTC)
- Package
  - 32-pin QFN, 48-pin LQFP, 64-pin LQFP, 100-pin LQFP, 100-pin MAPBGA, 144-pin LQFP, 176-pin LQFP package options
- 16 channel DMA with up to 63 request sources using DMAMUX

Table of Contents

1 Block diagram.....4
2 Feature comparison.....5
3 Ordering information.....7
3.1 Selecting orderable part number.....7
3.2 Ordering information.....8
4 General.....9
4.1 Absolute maximum ratings.....9
4.2 Voltage and current operating requirements.....10
4.3 Thermal operating characteristics.....11
4.4 Power and ground pins.....12
4.5 LVR, LVD and POR operating requirements.....14
4.6 Power mode transition operating behaviors.....15
4.7 Power consumption.....16
4.8 ESD handling ratings.....22
4.9 EMC radiated emissions operating behaviors.....22
5 I/O parameters.....23
5.1 AC electrical characteristics.....23
5.2 General AC specifications.....23
5.3 DC electrical specifications at 3.3 V Range.....24
5.4 DC electrical specifications at 5.0 V Range.....25
5.5 AC electrical specifications at 3.3 V range.....26
5.6 AC electrical specifications at 5 V range.....26
5.7 Standard input pin capacitance.....27
5.8 Device clock specifications.....27
6 Peripheral operating requirements and behaviors.....28
6.1 System modules.....28
6.2 Clock interface modules.....28
6.2.1 External System Oscillator electrical specifications.....28
6.2.2 External System Oscillator frequency specifications.....30
6.2.3 System Clock Generation (SCG) specifications.....32
6.2.3.1 Fast internal RC Oscillator (FIRC) electrical specifications.....32
6.2.3.2 Slow internal RC oscillator (SIRC) electrical specifications.....32
6.2.4 Low Power Oscillator (LPO) electrical specifications.....33
6.2.5 SPLL electrical specifications.....33
6.3 Memory and memory interfaces.....33
6.3.1 Flash memory module (FTFC) electrical specifications.....33
6.3.1.1 Flash timing specifications — commands.....33
6.3.1.2 Reliability specifications.....38
6.3.2 QuadSPI AC specifications.....39
6.4 Analog modules.....43
6.4.1 ADC electrical specifications.....43
6.4.1.1 12-bit ADC operating conditions.....43
6.4.1.2 12-bit ADC electrical characteristics.....45
6.4.2 CMP with 8-bit DAC electrical specifications.....47
6.5 Communication modules.....51
6.5.1 LPUART electrical specifications.....51
6.5.2 LPSPI electrical specifications.....51
6.5.3 LPI2C electrical specifications.....57
6.5.4 FlexCAN electical specifications.....58
6.5.5 SAI electrical specifications.....58
6.5.6 Ethernet AC specifications.....60
6.5.7 Clockout frequency.....63
6.6 Debug modules.....63
6.6.1 SWD electrical specofications.....63
6.6.2 Trace electrical specifications.....65
6.6.3 JTAG electrical specifications.....66
7 Thermal attributes.....69
7.1 Description.....69
7.2 Thermal characteristics.....69
7.3 General notes for specifications at maximum junction temperature.....74
8 Dimensions.....75
8.1 Obtaining package dimensions.....75
9 Pinouts.....76
9.1 Package pinouts and signal descriptions.....76
10 Revision History.....76

1 Block diagram

Following figures show superset high level architecture block diagrams of S32K14x series and S32K11x series respectively. Other devices within the family have a subset of the features. See Feature comparison for chip specific values.

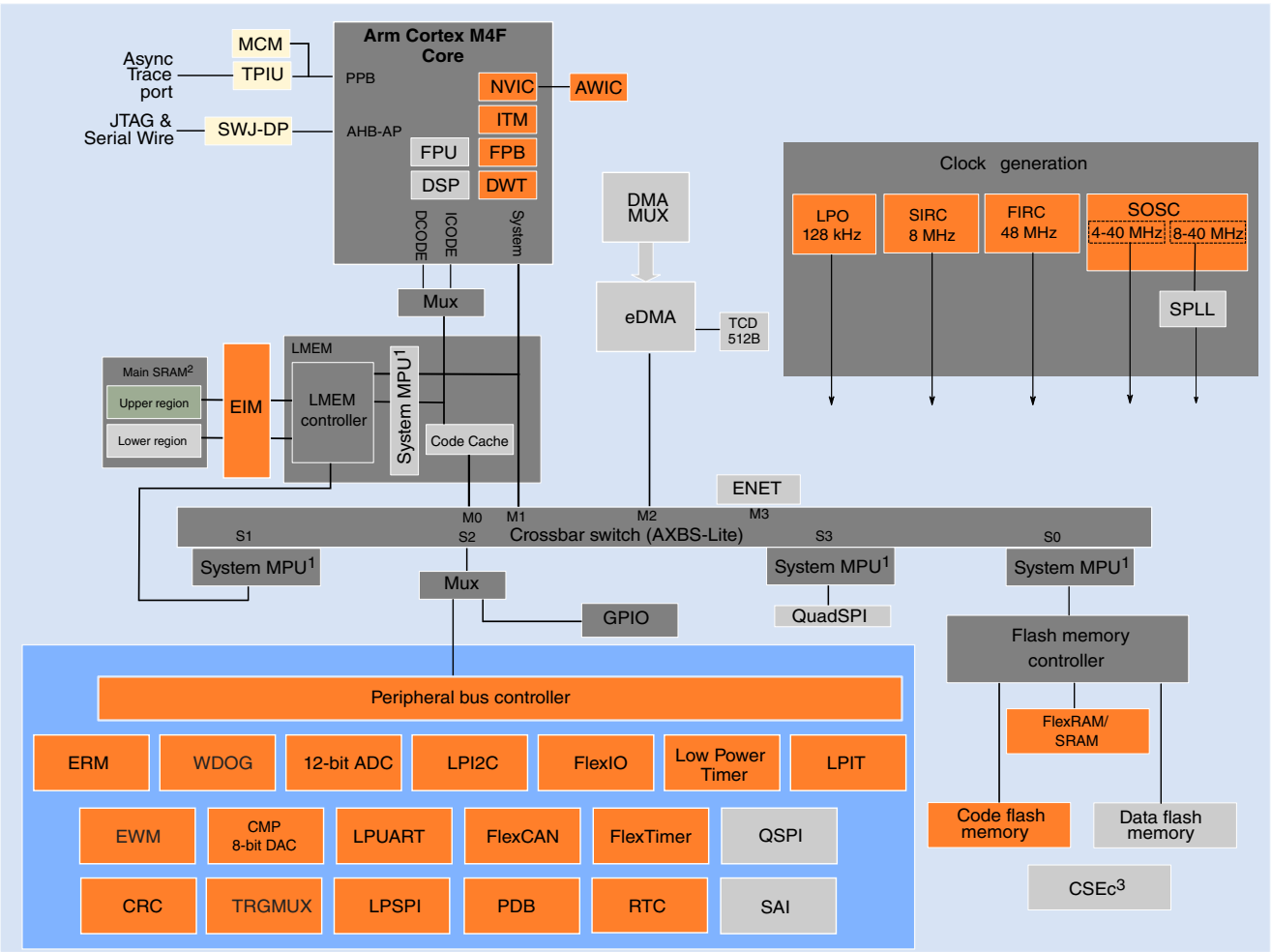

1: On this device, NXP's system MPU implements the safety mechanisms to prevent masters from accessing restricted memory regions. This system MPU provides memory protection at the level of the Crossbar Switch. Each Crossbar master (Core, DMA, Ethernet) can be assigned different access rights to each protected memory region. The Arm M4 core version in this family does not integrate the Arm Core MPU, which would concurrently monitor only core-initiated memory accesses. In this document, the term MPU refers to NXP's system MPU.

2: For the device-specific sizes, see the "On-chip SRAM sizes" table in the "Memories and Memory Interfaces" chapter of the S32K1xx Series Reference Manual.

3: CSEc (Security) or EEPROM writes/erase will trigger error flags in HSRUN mode (112 MHz) because this use case is not allowed to execute simultaneously. The device need to switch to RUN mode (80 MHz) to execute CSEc (Security) or EEPROM writes/erase.

Key:
- Device architectural IP on all S32K devices
- Peripherals present on all S32K devices
- Peripherals present on selected S32K devices (see the "Feature Comparison" section)

Figure 1. High-level architecture diagram for the S32K14x family

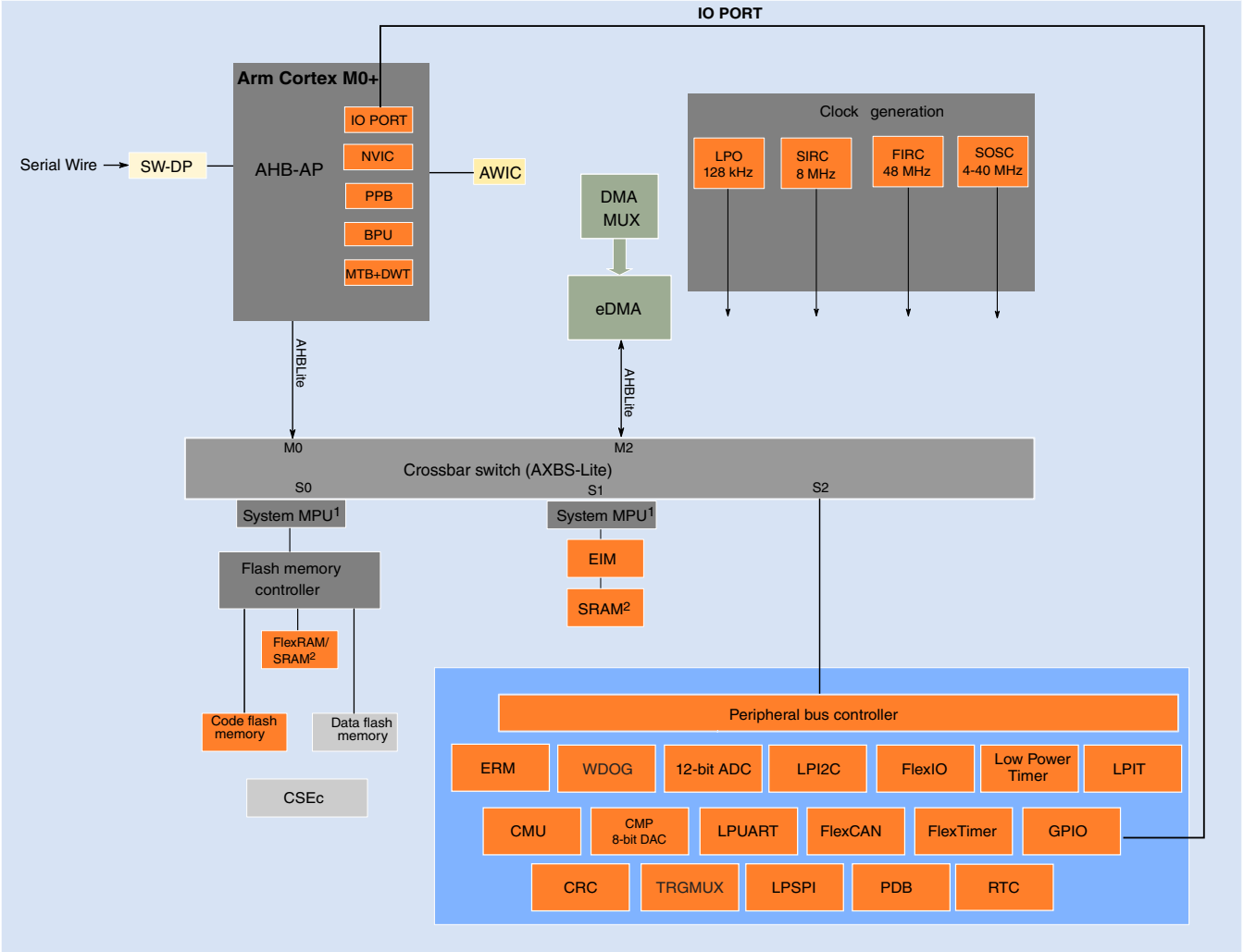

1: On this device, NXP's system MPU implements the safety mechanisms to prevent masters from accessing restricted memory regions. This system MPU provides memory protection at the level of the Crossbar Switch. Crossbar master (Core, DMA) can be assigned different access rights to each protected memory region. The Arm M0+ core version in this family does not integrate the Arm Core MPU, which would concurrently monitor only core-initiated memory accesses. In this document, the term MPU refers to NXP's system MPU.

2: For the device-specific sizes, see the "On-chip SRAM sizes" table in the "Memories and Memory Interfaces" chapter of the S32K1xx Series Reference Manual.

Key:
- Device architectural IP on all S32K devices
- Peripherals present on all S32K devices
- Peripherals present on selected S32K devices (see the "Feature Comparison" section)

Figure 2. High-level architecture diagram for the S32K11x family

2 Feature comparison

The following figure summarizes the memory, peripherals and packaging options for the S32K1xx devices. All devices which share a common package are pin-to-pin compatible.

NOTE

Availability of peripherals depends on the pin availability in a particular package. For more information see *IO Signal*

Description Input Multiplexing sheet(s) attached with Reference Manual.

		S32K11x		S32K14x			
	Parameter	K116	K118	K142	K144	K146	K148
	Core	Arm® Cortex™-M0+		Arm® Cortex™-M4F			
	Frequency	48 MHz		80 MHz (RUN mode) or 112 MHz (HSRUN mode)[1]			
System	IEEE-754 FPU	○		●			
System	Cryptographic Services Engine (CSEc)[1]	●		●			
System	CRC module	1x		1x			
System	ISO 26262	capable up to ASIL-B		capable up to ASIL-B			
System	Peripheral speed	up to 48 MHz		up to 112 MHz (HSRUN)			
System	Crossbar	●		●			
System	DMA	●		●			
System	External Watchdog Monitor (EWM)	○		●			
System	Memory Protection Unit (MPU)	●		●			
System	FIRC CMU	●		○			
System	Watchdog	1x		1x			
System	Low power modes	●		●			
System	HSRUN mode[1]	○		●			
System	Number of I/Os	up to 43	up to 58	up to 89		up to 128	up to 156
System	Single supply voltage	2.7 - 5.5 V		2.7 - 5.5 V			
System	Ambient Operation Temperature (T_a)	-40°C to +105°C / +125°C		-40°C to +105°C / +125°C			
Memory	Flash	128 KB	256 KB	256 KB	512 KB	1 MB	2 MB[2]
Memory	Error Correcting Code (ECC)	●		●			
Memory	System RAM (including FlexRAM and MTB)	17 KB	25 KB	32 KB	64 KB	128 KB	256 KB
Memory	FlexRAM (also available as system RAM)	2 KB		4 KB			
Memory	Cache	○		4 KB			
Memory	EEPROM emulated by FlexRAM[1]	2 KB (up to 32 KB D-Flash)		4 KB (up to 64 KB D-Flash)			See footnote 3
Memory	External memory interface	○		○			QuadSPI incl. HyperBus™
Timer	Low Power Interrupt Timer (LPIT)	1x		1x			
Timer	FlexTimer (16-bit counter) 8 channels	2x (16)		4x (32)		6x (48)	8x (64)
Timer	Low Power Timer (LPTMR)	1x		1x			
Timer	Real Time Counter (RTC)	1x		1x			
Timer	Programmable Delay Block (PDB)	1x		2x			
Analog	Trigger mux (TRGMUX)	1x (43)	1x (45)	1x (64)		1x (73)	1x (81)
Analog	12-bit SAR ADC (1 Msps each)	1x (13)	1x (16)	2x (16)		2x (24)	2x (32)
Analog	Comparator with 8-bit DAC	1x		1x			
Communication	10/100 Mbps IEEE-1588 Ethernet MAC	○		○			1x
Communication	Serial Audio Interface (AC97, TDM, I2S)	○		○			2x
Communication	Low Power UART/LIN (LPUART) (Supports LIN protocol versions 1.3, 2.0, 2.1, 2.2A, and SAE J2602)	2x		2x	3x		
Communication	Low Power SPI (LPSPI)	1x	2x	2x	3x		
Communication	Low Power I2C (LPI2C)	1x		1x			2x
Communication	FlexCAN (CAN-FD ISO/CD 11898-1)	1x (1x with FD)		2x (1x with FD)	3x (1x with FD)	3x (2x with FD)	3x (3x with FD)
Communication	FlexIO (8 pins configurable as UART, SPI, I2C, I2S)	1x		1x			
IDEs	Debug & trace	SWD, MTB (1 KB), JTAG[4]		SWD, JTAG (ITM, SWV, SWO)			SWD, JTAG (ITM, SWV, SWO), ETM
IDEs	Ecosystem (IDE, compiler, debugger)	NXP S32 Design Studio (GCC) + SDK, IAR, GHS, Arm®, Lauterbach, iSystems		NXP S32 Design Studio (GCC) + SDK, IAR, GHS, Arm®, Lauterbach, iSystems			
Other	Packages[5]	32-pin QFN 48-pin LQFP	48-pin LQFP 64-pin LQFP	48-pin LQFP 64-pin LQFP 100-pin LQFP	48-pin LQFP 64-pin LQFP 100-pin LQFP 100-pin MAPBGA	64-pin LQFP 100-pin MAPBGA 100-pin LQFP 144-pin LQFP	100-pin MAPBGA 100-pin LQFP[6] 144-pin LQFP 176-pin LQFP

LEGEND:
- ○ Not implemented
- ● Available on the device

1 No write or erase access to Flash module, including Security (CSEc) and EEPROM commands, are allowed when device is running at HSRUN mode (112MHz) or VLPR mode.
2 Available when EEEPROM, CSEc and Data Flash are not used. Else only up to 1,984 KB is available for Program Flash.
3 4 KB (up to 512 KB D-Flash as a part of 2 MB Flash). Up to 64 KB of flash is used as EEPROM backup and the remaining 448 KB of the last 512 KB block can be used as Data flash or Program flash. See chapter FTFC for details.
4 Only for Boundary Scan Register
5 See Dimensions section for package drawings
6 Under development, QuadSPI not supported for S32K148 in 100-pin LQFP

Figure 3. S32K1xx product series comparison

3 Ordering information

3.1 Selecting orderable part number

Not all part number combinations are available. See the attachment *S32K1xx_Orderable_Part_Number_ List.xlsx* attached with the Datasheet for a list of standard orderable part numbers.

3.2 Ordering information

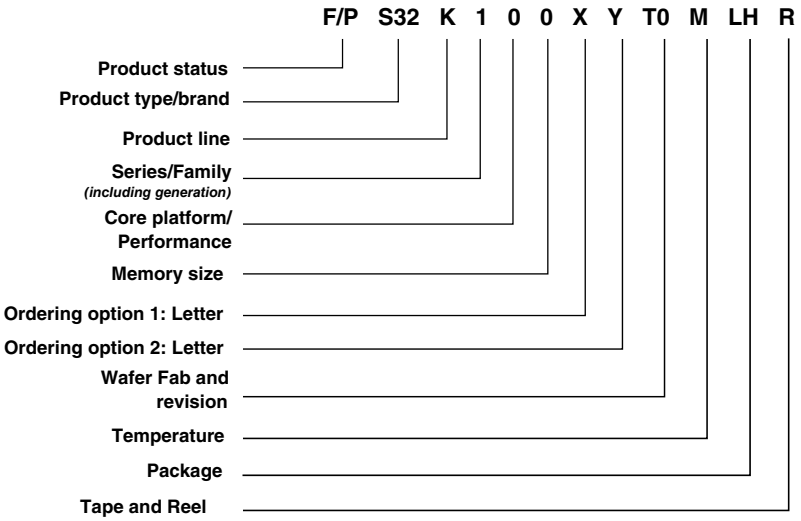

Product status
P: Prototype
F: Qualified

Product type/brand
S32: Automotive 32-bit MCU

Product line
K: Arm Cortex MCUs

Series/Family
1: 1st product series
2: 2nd product series

Core platform/Performance
1: Arm Cortex M0+
4: Arm Cortex M4F

Memory size

	2	4	6	8
S32K11x			128K	256K
S32K14x	256K	512K	1M	2M

Ordering option
X: Speed
B: 48 MHz without DMA (S32K11x only)
L: 48 MHz with DMA (S32K11x only)
H: 80 MHz
U[1]: 112 MHz (Not valid with M temperature/125C)

Y: Optional feature
V: NFC Stack License
F: CAN FD, FlexIO
A[1]: CAN FD, FlexIO, Security
X[1]: CAN FD, FlexIO, Security with NFC Stack License
E: Ethernet, Serial Audio Interface (S32K148 only)
J[1]: Ethernet, Serial Audio Interface, CAN FD, FlexIO, Security (S32K148 only)
I: ISELED, FlexIO
L[1]: ISELED, CAN FD, FlexIO, Security
G[1]: ISELED, Ethernet, Serial Audio Interface, CAN FD, FlexIO, Security (S32K148 only)

Wafer Fab and Mask revision identifier
Tx: Wafer Fab identifier
x0: Mask Revision identifier

Temperature
V: -40C to 105C
M: -40C to 125C

Package

Pins	LQFP	QFN	BGA
32	-	FM	-
48	LF	-	-
64	LH	-	-
100	LL	-	MH
144	LQ	-	-
176	LU	-	-

Tape and Reel
T: Trays/Tubes
R: Tape and Reel

1. CSEc (Security) or EEPROM writes/erase will trigger error flags in HSRUN mode (112 MHz) because this use case is not allowed to execute simultaneously. The device will need to switch to RUN mode (80 MHz) to execute CSEc (Security) or EEPROM writes/erase.
2. Part numbers no longer offered as standard include:

Ordering Option X
M: 64MHz

Ordering Option Y
N: limited RAM. 16KB for K142, 48KB for K144, 96KB for K146, 192KB for K148
R: Basic feature set
S: Security
B: CAN FD, FlexIO, limited RAM (S32K14x only)
C: CAN FD, FlexIO, Security, limited RAM (S32K14x only)

Temperature
C: -40C to 85C

NOTE
Not all part number combinations are available. See S32K1xx_Orderable_Part_Number_List.xlsx attached with the Datasheet for list of standard orderable parts.

Figure 4. Ordering information

4 General

4.1 Absolute maximum ratings

NOTE

- Functional operating conditions appear in the DC electrical characteristics. Absolute maximum ratings are stress ratings only, and functional operation at the maximum values is not guaranteed. See footnotes in the following table for specific conditions.
- Stress beyond the listed maximum values may affect device reliability or cause permanent damage to the device.
- All the limits defined in the datasheet specification must be honored together and any violation to any one or more will not guarantee desired operation.
- Unless otherwise specified, all maximum and minimum values in the datasheet are across process, voltage, and temperature.

Table 1. Absolute maximum ratings

Symbol	Parameter	Conditions[1]	Min	Max	Unit
V_{DD}[2]	2.7 V - 5. 5V input supply voltage	—	-0.3	5.8 [3]	V
V_{REFH}	3.3 V / 5.0 V ADC high reference voltage	—	-0.3	5.8 [3]	V
$I_{INJPAD_DC_ABS}$[4]	Continuous DC input current (positive / negative) that can be injected into an I/O pin	—	-3	+3	mA
V_{IN_DC}	Continuous DC Voltage on any I/O pin with respect to V_{SS}	—	-0.8	5.8[5]	V
$I_{INJSUM_DC_ABS}$	Sum of absolute value of injected currents on all the pins (Continuous DC limit)	—	—	30	mA
T_{ramp}[6]	ECU supply ramp rate	—	0.5 V/min	500 V/ms	—
T_{ramp_MCU}[7]	MCU supply ramp rate	—	0.5 V/min	100 V/ms	—
T_A[8]	Ambient temperature	—	-40	125	°C
T_{STG}	Storage temperature	—	-55	165	°C
$V_{IN_TRANSIENT}$	Transient overshoot voltage allowed on I/O pin beyond $V_{IN_DC\ limit}$	—	—	6.8 [9]	V

1. All voltages are referred to V_{SS} unless otherwise specified.
2. As V_{DD} varies between the minimum value and the absolute maximum value the analog characteristics of the I/O and the ADC will both change. See section I/O parameters and ADC electrical specifications respectively for details.
3. 60 seconds lifetime – No restrictions i.e. the part is not held in reset and can switch.

   10 hours lifetime – The part is held in reset by an external circuit i.e. the part cannot switch.

The supply should be kept in operating conditions and once out of operating conditions, the device should be either reset or powered off.

Operation with supply between 5.5 V and 5.8 V not in reset condition is allowed for 60 seconds cumulative over lifetime, the part will operate with reduced functionality.

Operation with supply between 5.5 V and 5.8 V but held in reset condition by external circuit is allowed for 10 hours cumulative over lifetime.

If the given time limits or supply levels are exceeded, the device may get damaged.

4. When input pad voltage levels are close to V_{DD} or V_{SS}, practically no current injection is possible.
5. While respecting the maximum current injection limit
6. This is the Electronic Control Unit (ECU) supply ramp rate and not directly the MCU ramp rate. Limit applies to both maximum absolute maximum ramp rate and typical operating conditions.
7. This is the MCU supply ramp rate and the ramp rate assumes that the S32K1xx HW design guidelines in AN5426 are followed. Limit applies to both maximum absolute maximum ramp rate and typical operating conditions.
8. T_J (Junction temperature)=135 °C. Assumes T_A=125 °C for RUN mode

   T_J (Junction temperature)=125 °C. Assumes TA=105 °C for HSRUN mode

   - Assumes maximum θJA for 2s2p board. See Thermal characteristics
9. 60 seconds lifetime; device in reset (no outputs enabled/toggling)

4.2 Voltage and current operating requirements

NOTE

Device functionality is guaranteed up to the LVR assert level, however electrical performance of 12-bit ADC, CMP with 8-bit DAC, IO electrical characteristics, and communication modules electrical characteristics would be degraded when voltage drops below 2.7 V

Table 2. Voltage and current operating requirements 1

Symbol	Description	Min.	Max.	Unit	Notes
V_{DD}[2]	Supply voltage	2.7[3]	5.5	V	4
V_{DD_OFF}	Voltage allowed to be developed on V_{DD} pin when it is not powered from any external power supply source.	0	0.1	V	
V_{DDA}	Analog supply voltage	2.7	5.5	V	4
$V_{DD} – V_{DDA}$	V_{DD}-to-V_{DDA} differential voltage	– 0.1	0.1	V	4
V_{REFH}	ADC reference voltage high	2.7	V_{DDA} + 0.1	V	5
V_{REFL}	ADC reference voltage low	-0.1	0.1	V	
V_{ODPU}	Open drain pullup voltage level	V_{DD}	V_{DD}	V	6
$I_{INJPAD_DC_OP}$[7]	Continuous DC input current (positive / negative) that can be injected into an I/O pin	-3	+3	mA	
$I_{INJSUM_DC_OP}$	Continuous total DC input current that can be injected across all I/O pins such that there's no degradation in accuracy of analog modules: ADC and ACMP (See section Analog Modules)	—	30	mA	

1. Typical conditions assumes $V_{DD} = V_{DDA} = V_{REFH} = 5$ V, temperature = 25 °C and typical silicon process unless otherwise stated.
2. As V_{DD} varies between the minimum value and the absolute maximum value the analog characteristics of the I/O and the ADC will both change. See section I/O parameters and ADC electrical specifications respectively for details.
3. S32K148 will operate from 2.7 V when executing from internal FIRC. When the PLL is engaged S32K148 is guaranteed to operate from 2.97 V. All other S32K family devices operate from 2.7 V in all modes.
4. V_{DD} and V_{DDA} must be shorted to a common source on PCB. The differential voltage between V_{DD} and V_{DDA} is for RF-AC only. Appropriate decoupling capacitors to be used to filter noise on the supplies. See application note AN5032 for reference supply design for SAR ADC.
5. V_{REFH} should always be equal to or less than V_{DDA} + 0.1 V and V_{DD} + 0.1 V
6. Open drain outputs must be pulled to V_{DD}.
7. When input pad voltage levels are close to V_{DD} or V_{SS}, practically no current injection is possible.

4.3 Thermal operating characteristics

Table 3. Thermal operating characteristics

Symbol	Parameter	Value			Unit
		Min.	Typ.	Max.	
$T_{A\ C\text{-}Grade\ Part}$	Ambient temperature under bias	–40	—	85[1]	°C
$T_{J\ C\text{-}Grade\ Part}$	Junction temperature under bias	–40	—	105[1]	°C
$T_{A\ V\text{-}Grade\ Part}$	Ambient temperature under bias	–40	—	105[1]	°C
$T_{J\ V\text{-}Grade\ Part}$	Junction temperature under bias	–40	—	125[1]	°C
$T_{A\ M\text{-}Grade\ Part}$	Ambient temperature under bias	–40	—	125[2]	°C
$T_{J\ M\text{-}Grade\ Part}$	Junction temperature under bias	–40	—	135[2]	°C

1. Values mentioned are measured at ≤ 112 MHz in HSRUN mode.
2. Values mentioned are measured at ≤ 80 MHz in RUN mode.

4.4 Power and ground pins

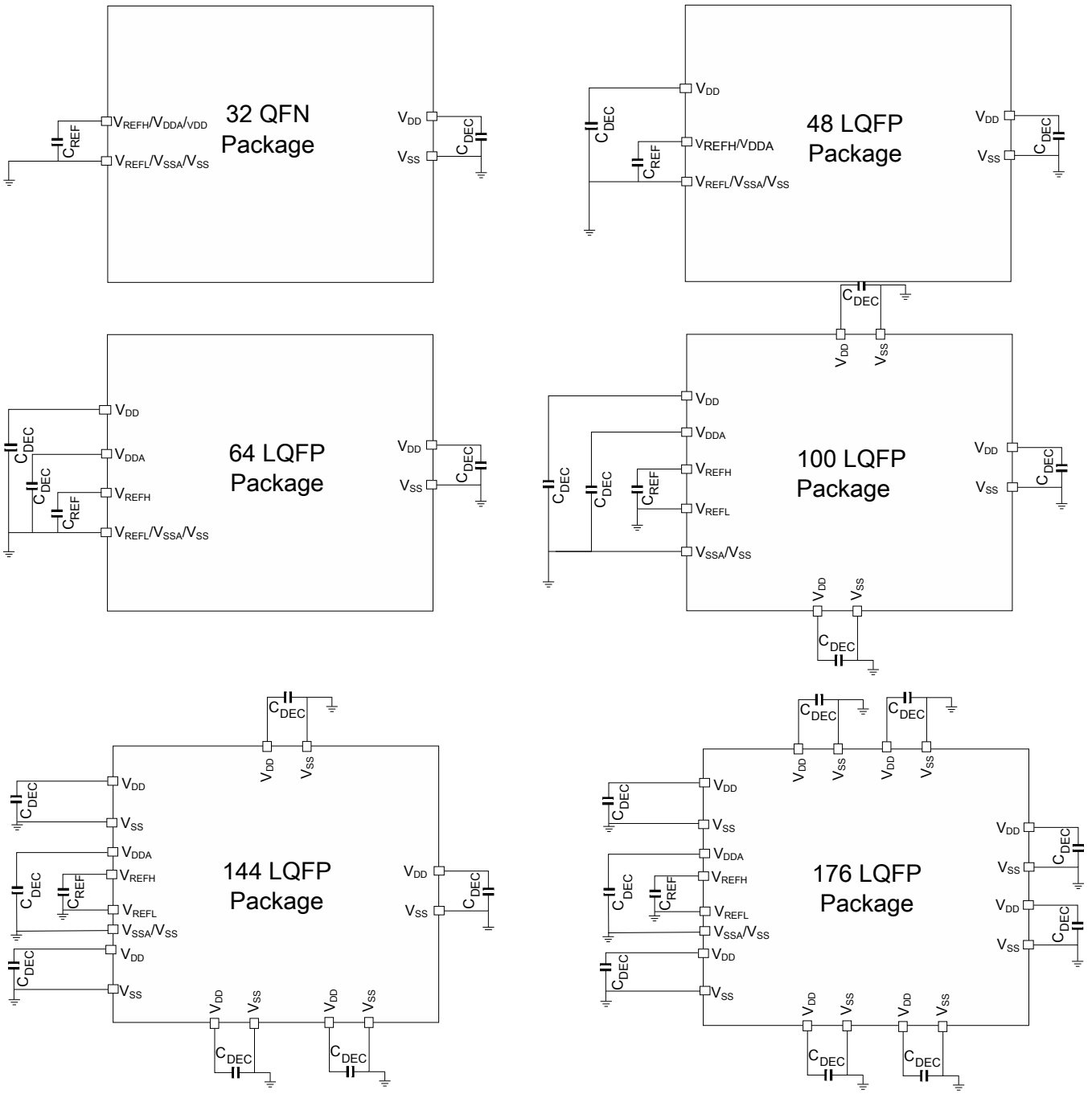

NOTE: V_{DD} and V_{DDA} must be shorted to a common source on PCB

Figure 5. Pinout decoupling

Table 4. Supplies decoupling capacitors 1, 2

Symbol	Description	Min. [3]	Typ.	Max.	Unit
C_{REF}, [4], [5]	ADC reference high decoupling capacitance	70	100	—	nF
C_{DEC}[5], [6], [7]	Recommended decoupling capacitance	70	100	—	nF

1. V_{DD} and V_{DDA} must be shorted to a common source on PCB. The differential voltage between V_{DD} and V_{DDA} is for RF-AC only. Appropriate decoupling capacitors to be used to filter noise on the supplies. See application note AN5032 for reference supply design for SAR ADC. All V_{SS} pins should be connected to common ground at the PCB level.
2. All decoupling capacitors must be low ESR ceramic capacitors (for example X7R type).
3. Minimum recommendation is after considering component aging and tolerance.
4. For improved performance, it is recommended to use 10 µF, 0.1 µF and 1 nF capacitors in parallel.
5. All decoupling capacitors should be placed as close as possible to the corresponding supply and ground pins.
6. Contact your local Field Applications Engineer for details on best analog routing practices.
7. The filtering used for decoupling the device supplies must comply with the following best practices rules:
    - The protection/decoupling capacitors must be on the path of the trace connected to that component.
    - No trace exceeding 1 mm from the protection to the trace or to the ground.
    - The protection/decoupling capacitors must be as close as possible to the input pin of the device (maximum 2 mm).
    - The ground of the protection is connected as short as possible to the ground plane under the integrated circuit.

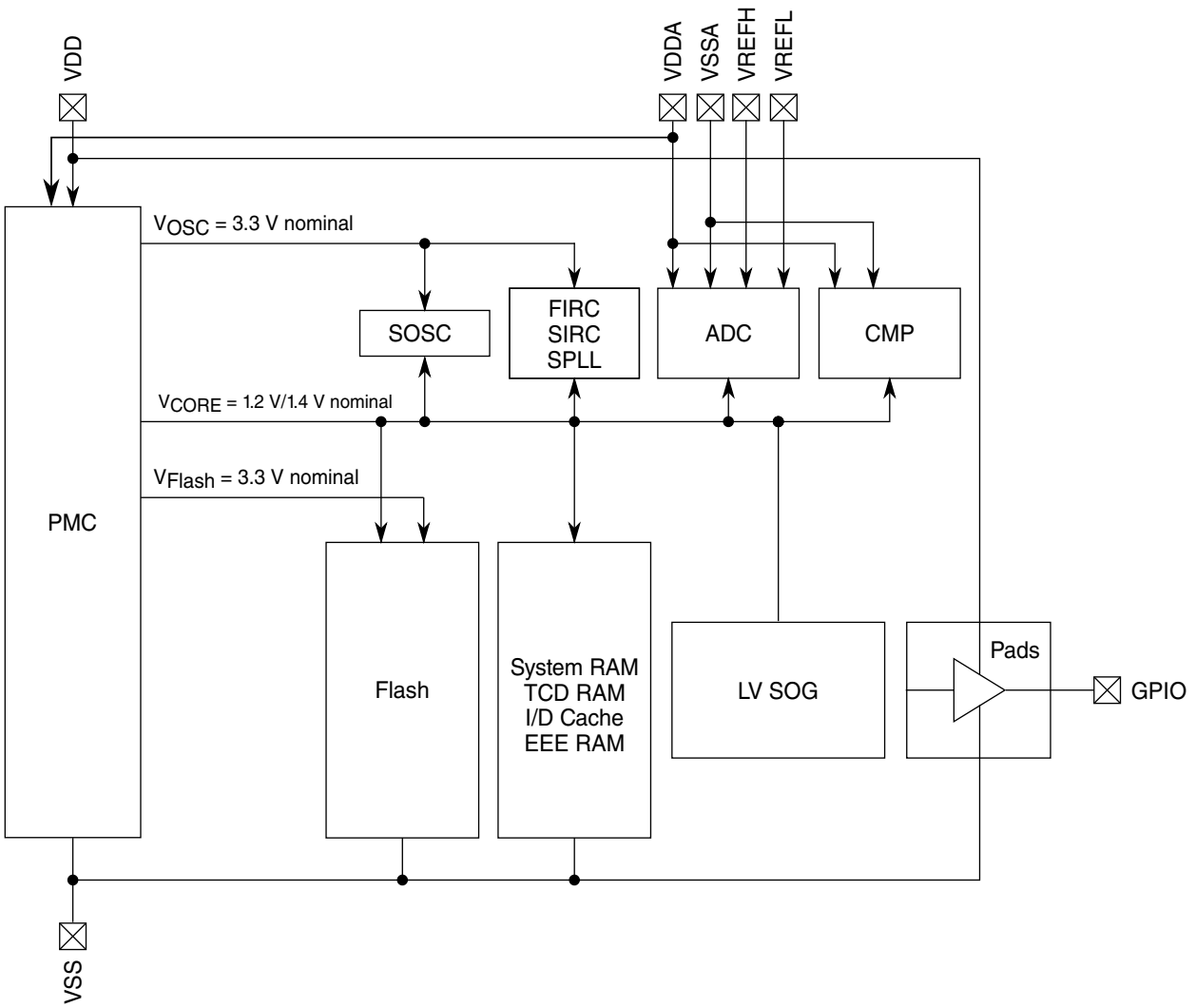

*Note: VSSA and VSS are shorted at package level

Figure 6. Power diagram

4.5 LVR, LVD and POR operating requirements

Table 5. V_{DD} supply LVR, LVD and POR operating requirements

Symbol	Description	Min.	Typ.	Max.	Unit	Notes
V_{POR}	Rising and falling V_{DD} POR detect voltage	1.1	1.6	2.0	V	
V_{LVR}	LVR falling threshold (RUN, HSRUN, and STOP modes)	2.50	2.58	2.7	V	
V_{LVR_HYST}	LVR hysteresis	—	45	—	mV	1
V_{LVR_LP}	LVR falling threshold (VLPS/VLPR modes)	1.97	2.22	2.44	V	
V_{LVD}	Falling low-voltage detect threshold	2.8	2.875	3	V	
V_{LVD_HYST}	LVD hysteresis	—	50	—	mV	1

Table continues on the next page...

Table 5. V_{DD} supply LVR, LVD and POR operating requirements (continued)

Symbol	Description	Min.	Typ.	Max.	Unit	Notes
V_{LVW}	Falling low-voltage warning threshold	4.19	4.305	4.5	V	
V_{LVW_HYST}	LVW hysteresis	—	75	—	mV	1
V_{BG}	Bandgap voltage reference	0.97	1.00	1.03	V	

1. Rising threshold is the sum of falling threshold and hysteresis voltage.

4.6 Power mode transition operating behaviors

All specifications in the following table assume this clock configuration:

- RUN Mode:
  - Clock source: FIRC
  - SYS_CLK/CORE_CLK = 48 MHz
  - BUS_CLK = 48 MHz
  - FLASH_CLK = 24 MHz
- HSRUN Mode:
  - Clock source: SPLL
  - SYS_CLK/CORE_CLK = 112 MHz
  - BUS_CLK = 56 MHz
  - FLASH_CLK = 28 MHz
- VLPR Mode:
  - Clock source: SIRC
  - SYS_CLK/CORE_CLK = 4 MHz
  - BUS_CLK = 4 MHz
  - FLASH_CLK = 1 MHz
- STOP1/STOP2 Mode:
  - Clock source: FIRC
  - SYS_CLK/CORE_CLK = 48 MHz
  - BUS_CLK = 48 MHz
  - FLASH_CLK = 24 MHz
- VLPS Mode: All clock sources disabled [1]

Table 6. Power mode transition operating behaviors

Symbol	Description	Min.	Typ.	Max.	Unit
t_{POR}	After a POR event, amount of time from the point V_{DD} reaches 2.7 V to execution of the first instruction across the operating temperature range of the chip.	—	325	—	µs

Table continues on the next page...

1.
   - For S32K11x – FIRC/SOSC
   - For S32K14x – FIRC/SOSC/SPLL

Table 6. Power mode transition operating behaviors (continued)

Symbol	Description	Min.	Typ.	Max.	Unit
	VLPS → RUN	8	—	17	µs
	STOP1 → RUN	0.07	0.075	0.08	µs
	STOP2 → RUN	0.07	0.075	0.08	µs
	VLPR → RUN	19	—	26	µs
	VLPR → VLPS	5.1	5.7	6.5	µs
	VLPS → VLPR	18.8	23	27.75	µs
	RUN → Compute operation	0.72	0.75	0.77	µs
	HSRUN → Compute operation	0.3	0.31	0.35	µs
	RUN → STOP1	0.35	0.38	0.4	µs
	RUN → STOP2	0.2	0.23	0.25	µs
	RUN → VLPS	0.3	0.35	0.4	µs
	RUN → VLPR	3.5	3.8	5	µs
	VLPS → Asynchronous DMA Wakeup	105	110	125	µs
	STOP1 → Asynchronous DMA Wakeup	1	1.1	1.3	µs
	STOP2 → Asynchronous DMA Wakeup	1	1.1	1.3	µs
	Pin reset → Code execution	—	214	—	µs

NOTE

HSRUN should only be used when frequencies in excess of 80 MHz are required. When using 80 MHz and below, RUN mode is the recommended operating mode.

4.7 Power consumption

The following table shows the power consumption targets for the device in various mode of operations. Attached *S32K1xx_Power_Modes _Configuration.xlsx* details the modes used in gathering the power consumption data stated in the following table Table 7. For full functionality refer to table: Module operation in available power modes of the *Reference Manual*.

Table 7. Power consumption (Typicals unless stated otherwise) [1]

Chip/Device	Ambient Temperature (°C)		VLPS (µA) [2]		VLPR (mA)			STOP1 (mA)	STOP2 (mA)	RUN@48 MHz (mA)		RUN@64 MHz (mA)		RUN@80 MHz (mA)		HSRUN@112 MHz (mA) [3]		IDD/MHz (µA/MHz) [4]
			Peripherals disabled [5]	LPTMR enabled	Peripherals disabled [6]	Peripherals enabled use case 1 [6]	Peripherals enabled use case 2 [7]			Peripherals disabled	Peripherals enabled	Peripherals disabled	Peripherals enabled	Peripherals disabled	Peripherals enabled	Peripherals disabled	Peripherals enabled	
S32K116	25	Typ	26	40	1.05	1.07	1.70	6.3	7.2	11.8	20.3	NA						245
	85	Typ	76	93	1.1	1.11	1.77	6.6	7.5	12	20.6							251
		Max	287	300	1.39	1.4	NA	8	8.9	13.4	22.1							279
	105	Typ	139	164	1.15	1.16	1.81	6.8	7.7	12.3	20.8							255
		Max	590	603	1.68	1.69	NA	9.2	10.1	14.5	23.1							302
	125	Typ	NA	NA	NA	NA	1.96	NA	NA	NA	NA							NA
		Max	891	904	2.02	2.04	NA	10.4	11.3	15.6	24.1							325
S32K118	25	Typ	27	40	1.15	1.16	1.76	6.4	7.3	12.8	21.5	NA						268
	85	Typ	81	100	1.20	1.21	1.82	6.7	7.6	13.2	21.8							274
		Max	304	323	1.46	1.47	NA	8	9	14.5	23.4							301
	105	Typ	149	175	1.27	1.28	1.89	6.9	7.9	13.4	22.1							279
		Max	606	637	1.76	1.77	NA	9.3	10.4	15.4	24.2							320
	125	Typ	NA	NA	NA	NA	2.03	NA	NA	NA	NA							NA
		Max	1111	1126	2.32	2.33	NA	11.0	11.9	17.1	25.9							357
S32K142	25	Typ	29	40	1.17	1.21	2.19	6.4	7.4	17.3	24.6	24.5	31.3	28.8	37.5	40.5	52.2	360
	85	Typ	128	137	1.48	1.51	2.31	7	8	17.6	24.9	25	31.6	29.1	37.7	41.1	52.5	364
		Max	335	360	1.87	1.89	NA	8.6	9.4	22	28.2	26.9	33.5	32	40	44	55.6	400

Table continues on the next page...

Table 7. Power consumption (Typicals unless stated otherwise) 1 (continued)

Chip/Device	Ambient Temperature (°C)		VLPS (µA) 2		VLPR (mA)			STOP1 (mA)	STOP2 (mA)	RUN@48 MHz (mA)		RUN@64 MHz (mA)		RUN@80 MHz (mA)		HSRUN@112 MHz (mA) 3		IDD/MHz (µA/MHz) 4
			Peripherals disabled 5	LPTMR enabled	Peripherals disabled 6	Peripherals enabled use case 1 6	Peripherals enabled use case 2 7			Peripherals disabled	Peripherals enabled	Peripherals disabled	Peripherals enabled	Peripherals disabled	Peripherals enabled	Peripherals disabled	Peripherals enabled	
	105	Typ	240	257	1.58	1.61	2.44	7.6	8.3	18.3	25.7	25.5	31.9	29.8	38	41.5	53.1	373
		Max	740	791	2.32	2.34	NA	9.9	10.9	23.1	30.2	27.8	35.3	33.8	40.7	44.9	57.4	423
	125	Typ	NA	NA	NA	NA	2.84	NA	NA	NA	NA	NA	NA	NA	NA	NA		NA
		Max	1637	1694	3.1	3.21	NA	12.7	13.7	25	32.9	30.7	38.8	36	43.8	NA		450
S32K144	25	Typ	29.8	42	1.48	1.50	2.91	7	7.7	19.7	26.9	25.1	33.3	30.2	39.6	43.3	55.6	378
	85	Typ	150	159	1.72	1.85	3.08	7.2	8.1	20.4	27.1	26.1	33.5	30.5	40	43.9	56.1	381
		Max	359	384	2.60	2.65	NA	9.2	9.9	23.2	29.6	29.3	36.2	34.8	42.1	46.3	59.7	435
	105	Typ	256	273	1.80	2.10	3.23	7.8	8.5	20.6	27.4	26.6	33.8	31.2	40.5	44.8	57.1	390
		Max	850	900	2.65	2.70	NA	10.3	11.1	23.9	30.6	30.3	37.3	35.6	43.5	47.9	61.3	445
	125	Typ	NA	NA	NA	NA	3.65	NA	NA	NA	NA	NA	NA	NA	NA	NA		NA
		Max	1960	1998	3.18	3.25	NA	12.9	13.8	26.9	33.6	35	40.3	38.7	46.8	NA		484
S32K146	25	Typ	37	47	1.57	1.61	3.3	8	9.2	23.4	31.4	30.5	40.2	36.2	47.6	52	68.3	452
	85	Typ	207	209	1.79	1.83	3.54	8.9	10.1	24.4	32.4	31.5	41.3	37.2	48.7	53.3	69.8	465
		Max	974	981	3.32	3.38	NA	12.7	13.9	29.3	37.9	36.7	47	42.4	54.4	60.3	78	530
	105	Typ	419	422	1.99	2.04	3.78	9.8	11	25.3	33.4	32.5	42.2	38.1	49.6	54.4	70.8	477
		Max	2004	2017	4.06	4.13	NA	17.1	18.3	34.1	42.6	41.3	51.4	46.9	58.8	65.7	82.8	587
	125	Typ	NA	NA	NA	NA	4.44	NA	NA	NA	NA	NA	NA	NA	NA	NA		NA

Table continues on the next page...

Table 7. Power consumption (Typicals unless stated otherwise) 1 (continued)

Chip/Device	Ambient Temperature (°C)		VLPS (µA) 2		VLPR (mA)			STOP1 (mA)	STOP2 (mA)	RUN@48 MHz (mA)		RUN@64 MHz (mA)		RUN@80 MHz (mA)		HSRUN@112 MHz (mA) 3		IDD/MHz (µA/MHz) 4
			Peripherals disabled 5	LPTMR enabled	Peripherals disabled 6	Peripherals enabled use case 1 6	Peripherals enabled use case 2 7			Peripherals disabled	Peripherals enabled	Peripherals disabled	Peripherals enabled	Peripherals disabled	Peripherals enabled	Peripherals disabled	Peripherals enabled	
		Max	3358	3380	5.28	5.38	NA	22.6	23.7	40.2	48.8	47.3	57.4	52.8	64.8	NA		660
S32K148 8	25	Typ	38	54	2.17	2.20	3.45	8.5	9.6	27.6	34.9	35.5	45.3	42.1	57.7	60.3	83.3	526
	85	Typ	336	357	2.30	2.35	3.74	10.1	11.1	29.1	37.0	36.8	46.6	43.4	59.9	62.9	88.7	543
		Max	1660	1736	3.48	3.55	NA	14.5	15.6	34.8	43.6	41.9	53.9	48.7	65.1	70.4	96.1	609
	105	Typ	560	577	2.49	2.54	4.03	10.9	11.9	29.8	37.8	37.6	47.5	45.2	61.5	63.8	89.1	565
		Max	2945	2970	4.40	4.47	NA	18.0	19.0	38.4	46.8	44.9	55.3	51.6	66.8	73.6	97.4	645
	125	Typ	NA	NA	NA	NA	4.85	NA	NA	NA	NA	NA	NA	NA	NA	NA		NA
		Max	3990	4166	6.00	6.08	NA	23.4	24.5	44.3	52.5	50.9	61.3	57.5	71.6	NA		719

1. Typical current numbers are indicative for typical silicon process and may vary based on the silicon distribution and user configuration. Typical conditions assumes $V_{DD} = V_{DDA} = V_{REFH} = 5$ V, temperature = 25 °C and typical silicon process unless otherwise stated. All output pins are floating and On-chip pulldown is enabled for all unused input pins.
2. Current numbers are for reduced configuration and may vary based on user configuration and silicon process variation.
3. HSRUN mode must not be used at 125°C. Max ambient temperature for HSRUN mode is 105°C.
4. Values mentioned for S32K14x devices are measured at RUN@80 MHz with peripherals disabled and values mentioned for S32K11x devices are measured at RUN@48 MHz with peripherals disabled.
5. With PMC_REGSC[CLKBIASDIS] set to 1. See Reference Manual for details.
6. Data collected using RAM
7. Numbers on limited samples size and data collected with Flash
8. The S32K148 data points assume that ENET/QuadSPI/SAI etc. are inactive.

Table 8. VLPS additional use-case power consumption at typical conditions 1, 2, 3

Use-case	Description	Temp.	Device						Unit
			S32K116	S32K118	S32K142	S32K144	S32K146	S32K148	
VLPS and RTC	• Clock source: LPO or RTC_CLKIN	25	30	30	30	31	38	40	µA
		85	96	102	148	170	227	356	µA
		105	179	189	280	290	460	600	µA
		125	281	327	570	680	810	1250	µA
VLPS and LPUART TX/RX	• Clock source: SIRC • Transmiting or receiving continuously using DMA • Baudrate: 19.2 kbps	25	179	187	230	230	250	250	µA
		85	235	244	320	400	410	490	µA
		105	304	325	490	550	600	850	µA
		125	499	551	890	1070	1250	1960	µA
VLPS and LPUART wake-up	• Clock source: SIRC • Wake-up address feature enabled • Baudrate: 19.2 kbps	25	107	107	135	138	146	146	µA
		85	149	157	170	240	280	350	µA
		105	199	223	260	400	480	600	µA
		125	347	405	530	580	1000	1280	µA
VLPS and LPI2C master	• Clock Source: SIRC • Transmit/receive using DMA • Baudrate: 100 kHz	25	600	600	670	690	820	900	µA
		85	696	712	880	960	1220	1370	µA
		105	815	852	1080	1250	1660	2060	µA
		125	1152	1251	1970	1980	2860	3690	µA
VLPS and LPI2C slave wake-up	• Clock source: SIRC • Wake-up address feature enabled • Baudrate: 100 kHz	25	260	260	260	260	270	280	µA
		85	293	308	340	340	410	510	µA
		105	339	367	430	430	610	810	µA
		125	478	543	740	760	1170	1540	µA
VLPS and LPSPI master [4]	• Clock source: SIRC • Transmit/receive using DMA • Baudrate: 500 kHz	25	2.51	2.94	2.99	3.19	3.75	4.11	mA
		85	2.67	3.09	3.26	3.7	4.35	4.93	mA
		105	2.83	3.21	3.5	4.2	4.93	5.74	mA
		125	3.34	3.53	3.93	4.63	5.97	7.38	mA
VLPS and LPIT	• Clock source: SIRC • 1 channel enable • Mode: 32-bit periodic counter	25	114	114	114	114	120	130	µA
		85	158	164	190	250	260	320	µA
		105	210	223	310	410	440	570	µA
		125	371	408	640	750	910	1280	µA

1. All power numbers listed in this table are typical power numbers
2. Current numbers are quoted for a certain application code and may vary on user configuration and silicon process variation.
3. The power numbers are not strictly for the VLPS mode operation alone, but also includes power due to periodic wakeup. The power therefore includes wakeup plus VLPS mode activity. This leads to greater dependence of power numbers on application code.
4. The single LPSPI used is LPSPI1 in S32K14X devices but LPSPI0 in S32K11x devices.

The following table shows the power consumption targets for S32K148 in various mode of operations measure at 3.3 V.

Table 9. Power consumption at 3.3 V

Chip/Device	Ambient Temperature (°C)		RUN@80 MHz (mA)		HSRUN@112 MHz (mA)[1]	
			Peripherals enabled + QSPI	Peripherals enabled + ENET + SAI	Peripherals enabled + QSPI	Peripherals enabled + ENET + SAI
S32K148	25	Typ	67.3	79.1	89.8	105.5
	85	Typ	67.4	79.2	95.6	105.9
		Max	82.5	88.2	109.7	117.4
	105	Typ	68.0	79.8	96.6	106.7
		Max	80.3	89.1	109.0	119.0
	125	Max	83.5	94.7	NA	

1. HSRUN mode must not be used at 125°C. Max ambient temperature for HSRUN mode is 105°C.

4.8 ESD handling ratings

Symbol	Description	Min.	Max.	Unit	Notes
V_{HBM}	Electrostatic discharge voltage, human body model	– 4000	4000	V	1
V_{CDM}	Electrostatic discharge voltage, charged-device model				2
	All pins except the corner pins	– 500	500	V	
	Corner pins only	– 750	750	V	
I_{LAT}	Latch-up current at ambient temperature of 125 °C	– 100	100	mA	3

1. Determined according to JEDEC Standard JESD22-A114, *Electrostatic Discharge (ESD) Sensitivity Testing Human Body Model (HBM)*.
2. Determined according to JEDEC Standard JESD22-C101, *Field-Induced Charged-Device Model Test Method for Electrostatic-Discharge-Withstand Thresholds of Microelectronic Components*.
3. Determined according to JEDEC Standard JESD78, *IC Latch-Up Test*.

4.9 EMC radiated emissions operating behaviors

EMC measurements to IC-level IEC standards are available from NXP on request.

5 I/O parameters

5.1 AC electrical characteristics

Unless otherwise specified, propagation delays are measured from the 50% to the 50% point, and rise and fall times are measured at the 20% and 80% points, as shown in the following figure.

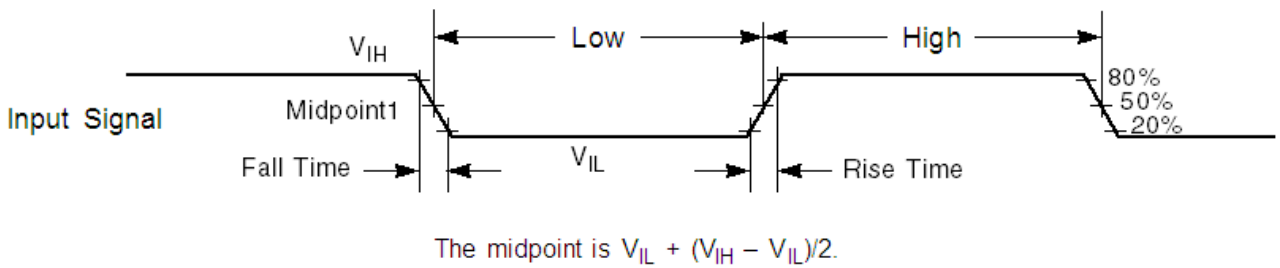

Figure 7. Input signal measurement reference

5.2 General AC specifications

These general purpose specifications apply to all signals configured for GPIO, UART, and timers.

Table 10. General switching specifications

Symbol	Description	Min.	Max.	Unit	Notes
	GPIO pin interrupt pulse width (digital glitch filter disabled) — Synchronous path	1.5	—	Bus clock cycles	1, 2
	GPIO pin interrupt pulse width (digital glitch filter disabled, passive filter disabled) — Asynchronous path	50	—	ns	3
WFRST	$\overline{\text{RESET}}$ input filtered pulse	—	10	ns	4
WNFRST	$\overline{\text{RESET}}$ input not filtered pulse	Maximum of (100 ns, bus clock period)	—	ns	5

1. This is the minimum pulse width that is guaranteed to pass through the pin synchronization circuitry. Shorter pulses may or may not be recognized. In Stop and VLPS modes, the synchronizer is bypassed so shorter pulses can be recognized in that case.
2. The greater of synchronous and asynchronous timing must be met.
3. These pins do not have a passive filter on the inputs. This is the shortest pulse width that is guaranteed to be recognized.
4. Maximum length of $\overline{\text{RESET}}$ pulse which will be the filtered by internal filter only if PCR_PTA5[PFE] is at its reset value of 1'b1.
5. Minimum length of $\overline{\text{RESET}}$ pulse, guaranteed not to be filtered by the internal filter only if PCR_PTA5[PFE] is at its reset value of 1'b1. This number depends on the bus clock period also. In this case, minimum pulse width which will cause reset is 250 ns. For faster clock frequencies which have clock period less than 100 ns, the minimum pulse width not filtered will

be 100 ns. After this filtering mechanism, the software has an option to put additional filtering in addition to this, by means of PCM_RPC register and/or PORT_DFER register for PTA5.

5.3 DC electrical specifications at 3.3 V Range

NOTE

For details on the pad types defined in Table 11 and Table 12, see Reference Manual section *IO Signal Table* and IO Signal Description Input Multiplexing sheet(s) attached with Reference Manual.

Table 11. DC electrical specifications at 3.3 V Range

Symbol	Parameter	Value			Unit	Notes
		Min.	Typ.	Max.		
V_{DD}	I/O Supply Voltage	2.7	3.3	4	V	1
V_{ih}	Input Buffer High Voltage	$0.7 \times V_{DD}$	—	$V_{DD} + 0.3$	V	2
V_{il}	Input Buffer Low Voltage	$V_{SS} - 0.3$	—	$0.3 \times V_{DD}$	V	3
V_{hys}	Input Buffer Hysteresis	$0.06 \times V_{DD}$	—	—	V	
Ioh_{GPIO} $Ioh_{GPIO\text{-}HD_DSE_0}$	I/O current source capability measured when pad $V_{oh} = (V_{DD} - 0.8\ V)$	3.5	—	—	mA	
Iol_{GPIO} $Iol_{GPIO\text{-}HD_DSE_0}$	I/O current sink capability measured when pad $V_{ol} = 0.8\ V$	3	—	—	mA	
$Ioh_{GPIO\text{-}HD_DSE_1}$	I/O current source capability measured when pad $V_{oh} = (V_{DD} - 0.8\ V)$	14	—	—	mA	4
$Iol_{GPIO\text{-}HD_DSE_1}$	I/O current sink capability measured when pad $V_{ol} = 0.8\ V$	12	—	—	mA	4
$Ioh_{GPIO\text{-}FAST_DSE_0}$	I/O current sink capability measured when pad $V_{oh}=V_{DD}-0.8\ V$	9.5	—	—	mA	5
$Iol_{GPIO\text{-}FAST_DSE_0}$	I/O current sink capability measured when pad $V_{ol} = 0.8\ V$	10	—	—	mA	5
$Ioh_{GPIO\text{-}FAST_DSE_1}$	I/O current sink capability measured when pad $V_{oh}=V_{DD}-0.8\ V$	16	—	—	mA	5
$Iol_{GPIO\text{-}FAST_DSE_1}$	I/O current sink capability measured when pad $V_{ol} = 0.8\ V$	15.5	—	—	mA	5
IOHT	Output high current total for all ports	—	—	100	mA	
IIN	Input leakage current (per pin) for full temperature range at $V_{DD} = 3.3\ V$					6
	All pins other than high drive port pins		0.005	0.5	μA	
	High drive port pins [7]		0.010	0.5	μA	
R_{PU}	Internal pullup resistors	20		60	kΩ	8
R_{PD}	Internal pulldown resistors	20		60	kΩ	9

1. S32K148 will operate from 2.7 V when executing from internal FIRC. When the PLL is engaged S32K148 is guaranteed to operate from 2.97 V. All other S32K family devices operate from 2.7 V in all modes.
2. For reset pads, same V_{ih} levels are applicable
3. For reset pads, same V_{il} levels are applicable

4. The value given is measured at high drive strength mode. For value at low drive strength mode see the Ioh_Standard value given above.
5. For refernce only. Run simulations with the IBIS model and custom board for accurate results.
6. Several I/O have both high drive and normal drive capability selected by the associated Portx_PCRn[DSE] control bit. All other GPIOs are normal drive only. For details see IO Signal Description Input Multiplexing sheet(s) attached with the *Reference Manual*.
7. When using ENET and SAI on S32K148, the overall device limits associated with high drive pin configurations must be respected i.e. On 144-pin LQFP the general purpose pins: PTA10, PTD0, and PTE4 must be set to low drive.
8. Measured at input V = V_{SS}
9. Measured at input V = V_{DD}

5.4 DC electrical specifications at 5.0 V Range

Table 12. DC electrical specifications at 5.0 V Range

Symbol	Parameter	Value			Unit	Notes
		Min.	Typ.	Max.		
V_{DD}	I/O Supply Voltage	4	—	5.5	V	
V_{ih}	Input Buffer High Voltage	0.65 x V_{DD}	—	V_{DD} + 0.3	V	1
V_{il}	Input Buffer Low Voltage	V_{SS} – 0.3	—	0.35 x V_{DD}	V	2
V_{hys}	Input Buffer Hysteresis	0.06 x V_{DD}	—	—	V	
Ioh_{GPIO} $Ioh_{GPIO\text{-}HD_DSE_0}$	I/O current source capability measured when pad V_{oh}= (V_{DD} - 0.8 V)	5	—	—	mA	
Iol_{GPIO} $Iol_{GPIO\text{-}HD_DSE_0}$	I/O current sink capability measured when pad V_{ol}= 0.8 V	5	—	—	mA	
$Ioh_{GPIO\text{-}HD_DSE_1}$	I/O current source capability measured when pad V_{oh} = V_{DD} - 0.8 V	20	—	—	mA	3
$Iol_{GPIO\text{-}HD_DSE_1}$	I/O current sink capability measured when pad V_{ol} = 0.8 V	20	—	—	mA	3
$Ioh_{GPIO\text{-}FAST_DSE_0}$	I/O current sink capability measured when pad V_{oh} = V_{DD} - 0.8 V	14.0	—	—	mA	4
$Iol_{GPIO\text{-}FAST_DSE_0}$	I/O current sink capability measured when pad V_{ol}= 0.8 V	14.5	—	—	mA	4
$Ioh_{GPIO\text{-}FAST_DSE_1}$	I/O current sink capability measured when pad V_{oh} = V_{DD} - 0.8 V	21	—	—	mA	4
$Iol_{GPIO\text{-}FAST_DSE_1}$	I/O current sink capability measured when pad V_{ol}= 0.8 V	20.5	—	—	mA	4
IOHT	Output high current total for all ports	—	—	100	mA	
IIN	Input leakage current (per pin) for full temperature range at V_{DD} = 5.5 V					5
	All pins other than high drive port pins		0.005	0.5	µA	
	High drive port pins		0.010	0.5	µA	
R_{PU}	Internal pullup resistors	20		50	kΩ	6
R_{PD}	Internal pulldown resistors	20		50	kΩ	7

1. For reset pads, same V_{ih} levels are applicable
2. For reset pads, same V_{il} levels are applicable

3. The strong pad I/O pin is capable of switching a 50 pF load up to 40 MHz.
4. For refernce only. Run simulations with the IBIS model and custom board for accurate results.
5. Several I/O have both high drive and normal drive capability selected by the associated Portx_PCRn[DSE] control bit. All other GPIOs are normal drive only. For details refer to *SK3K144_IO_Signal_Description_Input_Multiplexing.xlsx* attached with the *Reference Manual*.
6. Measured at input V = V_{SS}
7. Measured at input V = V_{DD}

5.5 AC electrical specifications at 3.3 V range

Table 13. AC electrical specifications at 3.3 V Range

Symbol	DSE	Rise time (nS) [1]		Fall time (nS) [1]		Capacitance (pF) [2]
		Min.	Max.	Min.	Max.	
tRF_{GPIO}	NA	3.2	14.5	3.4	15.7	25
		5.7	23.7	6.0	26.2	50
		20.0	80.0	20.8	88.4	200
$tRF_{GPIO-HD}$	0	3.2	14.5	3.4	15.7	25
		5.7	23.7	6.0	26.2	50
		20.0	80.0	20.8	88.4	200
	1	1.5	5.8	1.7	6.1	25
		2.4	8.0	2.6	8.3	50
		6.3	22.0	6.0	23.8	200
$tRF_{GPIO-FAST}$	0	0.6	2.8	0.5	2.8	25
		3.0	7.1	2.6	7.5	50
		12.0	27.0	10.3	26.8	200
	1	0.4	1.3	0.38	1.3	25
		1.5	3.8	1.4	3.9	50
		7.4	14.9	7.0	15.3	200

1. For reference only. Run simulations with the IBIS model and your custom board for accurate results.
2. Maximum capacitances supported on Standard IOs. However interface or protocol specific specifications might be different, for example for ENET, QSPI etc. . For protocol specific AC specifications, see respective sections.

5.6 AC electrical specifications at 5 V range

Table 14. AC electrical specifications at 5 V Range

Symbol	DSE	Rise time (nS)[1]		Fall time (nS) [1]		Capacitance (pF) [2]
		Min.	Max .	Min.	Max.	
tRF_{GPIO}	NA	2.8	9.4	2.9	10.7	25
		5.0	15.7	5.1	17.4	50
		17.3	54.8	17.6	59.7	200
$tRF_{GPIO-HD}$	0	2.8	9.4	2.9	10.7	25

Table continues on the next page...

Table 14. AC electrical specifications at 5 V Range (continued)

Symbol	DSE	Rise time (nS)[1]		Fall time (nS) [1]		Capacitance (pF) [2]
		Min.	Max .	Min.	Max.	
		5.0	15.7	5.1	17.4	50
		17.3	54.8	17.6	59.7	200
	1	1.1	4.6	1.1	5.0	25
		2.0	5.7	2.0	5.8	50
		5.4	16.0	5.0	16.0	200
$tRF_{GPIO-FAST}$	0	0.42	2.2	0.37	2.2	25
		2.0	5.0	1.9	5.2	50
		9.3	18.8	8.5	19.3	200
	1	0.37	0.9	0.35	0.9	25
		1.2	2.7	1.2	2.9	50
		6.0	11.8	6.0	12.3	200

1. For reference only. Run simulations with the IBIS model and your custom board for accurate results.
2. Maximum capacitances supported on Standard IOs. However interface or protocol specific specifications might be different, for example for ENET, QSPI etc. . For protocol specific AC specifications, see respective sections.

5.7 Standard input pin capacitance

Table 15. Standard input pin capacitance

Symbol	Description	Min.	Max.	Unit
C_{IN_D}	Input capacitance: digital pins	—	7	pF

NOTE

Please refer to External System Oscillator electrical specifications for EXTAL/XTAL pins.

5.8 Device clock specifications

Table 16. Device clock specifications 1

Symbol	Description	Min.	Max.	Unit
High Speed run mode[2]				
f_{SYS}	System and core clock	—	112	MHz
f_{BUS}	Bus clock	—	56	MHz
f_{FLASH}	Flash clock	—	28	MHz
Normal run mode (S32K11x series)				
f_{SYS}	System and core clock	—	48	MHz

Table continues on the next page...

Table 16. Device clock specifications 1 (continued)

Symbol	Description	Min.	Max.	Unit
f_{BUS}	Bus clock	—	48	MHz
f_{FLASH}	Flash clock	—	24	MHz
Normal run mode (S32K14x series) [3]				
f_{SYS}	System and core clock	—	80	MHz
f_{BUS}	Bus clock	—	40[4]	MHz
f_{FLASH}	Flash clock	—	26.67	MHz
VLPR mode (S32K1xx series)[5]				
f_{SYS}	System and core clock	—	4	MHz
f_{BUS}	Bus clock	—	4	MHz
f_{FLASH}	Flash clock	—	1	MHz
f_{ERCLK}	External reference clock	—	16	MHz

1. Refer to the section Feature comparison for the availability of modes and other specifications.
2. Only available on some devices. See section Feature comparison.
3. With SPLL as system clock source.
4. 48 MHz when f_{SYS} is 48 MHz
5. The frequency limitations in VLPR mode here override any frequency specification listed in the timing specification for any other module.

6 Peripheral operating requirements and behaviors

6.1 System modules

There are no electrical specifications necessary for the device's system modules.

6.2 Clock interface modules

6.2.1 External System Oscillator electrical specifications

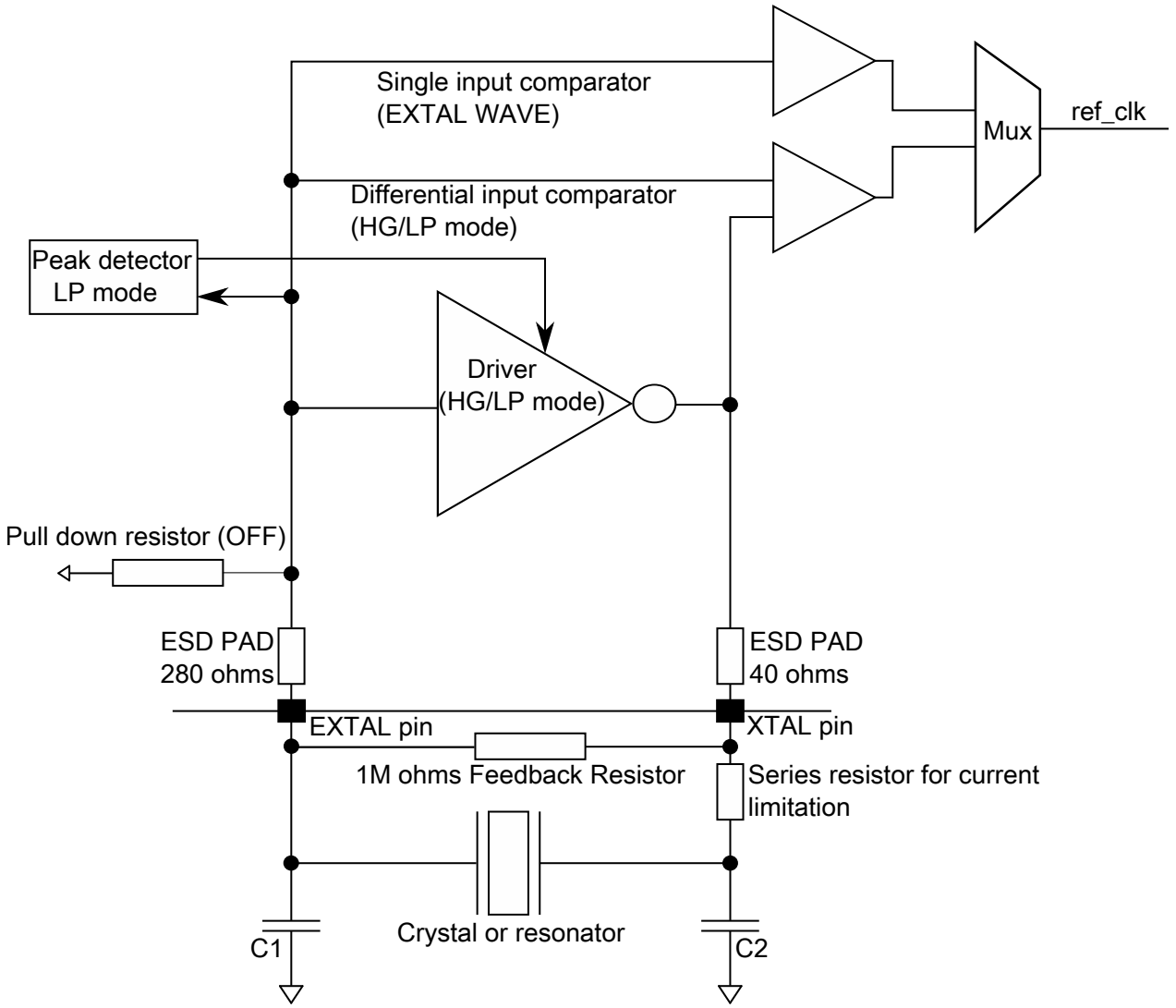

Figure 8. Oscillator connections scheme

Table 17. External System Oscillator electrical specifications

Symbol	Description	Min.	Typ.	Max.	Unit	Notes
g_{mXOSC}	Crystal oscillator transconductance					
	SCG_SOSCCFG[RANGE]=2'b10 for 4-8 MHz	2.2	—	13.7	mA/V	
	SCG_SOSCCFG[RANGE]=2'b11 for 8-40 MHz	16	—	47	mA/V	
V_{IL}	Input low voltage — EXTAL pin in external clock mode	V_{SS}	—	1.15	V	
V_{IH}	Input high voltage — EXTAL pin in external clock mode	0.7 * V_{DD}	—	V_{DD}	V	
C_1	EXTAL load capacitance	—	—	—		1
C_2	XTAL load capacitance	—	—	—		1
R_F	Feedback resistor					2
	Low-gain mode (HGO=0)	—	—	—	MΩ	

Table continues on the next page...

Table 17. External System Oscillator electrical specifications (continued)

Symbol	Description	Min.	Typ.	Max.	Unit	Notes
	High-gain mode (HGO=1)	—	1	—	MΩ	
R_S[3]	Series resistor					
	Low-gain mode (HGO=0)	—	0	—	kΩ	
	High-gain mode (HGO=1)	—	0	—	kΩ	
V_{pp_XTAL}	Peak-to-peak amplitude of oscillation (oscillator mode) at XTAL					4
	Low-gain mode (HGO=0)	—	1.0	—	V	
	High-gain mode (HGO=1)	—	3.3	—	V	
V_{pp_EXTAL}	Peak-to-peak amplitude of oscillation (oscillator mode) at EXTAL					4
	Low-gain mode (HGO=0)	0.8	—	—	V	
	High-gain mode (HGO=1), V_{DD}= 4.0 V to 5.5 V	1.7	—	—	V	
V_{SOSCOP}	Oscillation operating point					4
	High-gain mode (HGO=1)	1.15	—	—	V	

1. Crystal oscillator circuit provides stable oscillations when g_{mXOSC} > 5 * gm_crit. The gm_crit is defined as:

   gm_crit = 4 * (ESR + R_S) * $(2\pi F)^2$ * $(C_0 + C_L)^2$

   where:

   - g_{mXOSC} is the transconductance of the internal oscillator circuit
   - ESR is the equivalent series resistance of the external crystal
   - R_S is the series resistance connected between XTAL pin and external crystal for current limitation
   - F is the external crystal oscillation frequency
   - C_0 is the shunt capacitance of the external crystal
   - C_L is the external crystal total load capacitance. $C_L = C_s + [C_1 * C_2/(C_1+C_2)]$
   - C_s is stray or parasitic capacitance on the pin due to any PCB traces
   - C_1, C_2 external load capacitances on EXTAL and XTAL pins

   See manufacture datasheet for external crystal component values
2. - When low-gain is selected, internal R_F will be selected and external R_F should not be attached.
   - When high-gain is selected, external R_F (1 M Ohm) needs to be connected for proper operation of the crystal. For external resistor, up to 5% tolerance is allowed.
3. R_S should be selected carefully to have appropriate oscillation amplitude for both protecting crystal or resonator device and satisfying proper oscillation startup condition.
4. The EXTAL and XTAL pins should only be connected to required oscillator components and must not be connected to any other devices.

6.2.2 External System Oscillator frequency specifications

Table 18. External System Oscillator frequency specifications

Symbol	Description	Min.		Typ.		Max.		Unit	Notes
		S32K14x	S32K11x	S32K14x	S32K11x	S32K14x	S32K11x		
f_{osc_hi}	Oscillator crystal or resonator frequency	4		—		40 [1]		MHz	
f_{ec_extal}	Input clock frequency (external clock mode)	—		—		50	48	MHz	2
t_{dc_extal}	Input clock duty cycle (external clock mode)	48		50		52		%	2
t_{cst}	Crystal Start-up Time								
	8 MHz low-gain mode (HGO=0)	—		1.5		—		ms	3
	8 MHz high-gain mode (HGO=1)	—		2.5		—			
	40 MHz low-gain mode (HGO=0)	—		2		—			
	40 MHz high-gain mode (HGO=1)	—		2		—			

1. For an ideal clock of 40 MHz, if permitted by application requirements, an error of +/- 5% is supported with 50% duty cycle
2. Frequencies below 40 MHz can be used for degraded duty cycle upto 40-60%
3. Proper PC board layout procedures must be followed to achieve specifications.

6.2.3 System Clock Generation (SCG) specifications

6.2.3.1 Fast internal RC Oscillator (FIRC) electrical specifications

Table 19. Fast internal RC Oscillator electrical specifications

Symbol	Parameter[1]	Value			Unit
		Min.	Typ.	Max.	
F_{FIRC}	FIRC target frequency	—	48	—	MHz
ΔF	Frequency deviation across process, voltage, and temperature < 105°C	—	±0.5	±1	$\%F_{FIRC}$
ΔF125	Frequency deviation across process, voltage, and temperature < 125°C	—	±0.5	±1.1	$\%F_{FIRC}$
$T_{Startup}$	Startup time		3.4	5	µs[2]
T_{JIT}, [3]	Cycle-to-Cycle jitter	—	300	500	ps
T_{JIT}[3]	Long term jitter over 1000 cycles	—	0.04	0.1	$\%F_{FIRC}$

1. With FIRC regulator enable
2. Startup time is defined as the time between clock enablement and clock availability for system use.
3. FIRC as system clock

NOTE

Fast internal RC oscillator is compliant with LIN when device is used as a slave node.

6.2.3.2 Slow internal RC oscillator (SIRC) electrical specifications

Table 20. Slow internal RC oscillator (SIRC) electrical specifications

Symbol	Parameter	Value			Unit
		Min.	Typ.	Max.	
F_{SIRC}	SIRC target frequency	—	8	—	MHz
ΔF	Frequency deviation across process, voltage, and temperature < 105°C	—	—	±3	$\%F_{SIRC}$
ΔF125	Frequency deviation across process, voltage, and temperature < 125°C	—	—	±3.3	$\%F_{SIRC}$
$T_{Startup}$	Startup time	—	9	12.5	µs[1]

1. Startup time is defined as the time between clock enablement and clock availability for system use.

6.2.4 Low Power Oscillator (LPO) electrical specifications

Table 21. Low Power Oscillator (LPO) electrical specifications

Symbol	Parameter	Min.	Typ.	Max.	Unit
F_{LPO}	Internal low power oscillator frequency	113	128	139	kHz
$T_{startup}$	Startup Time	—	—	20	µs

6.2.5 SPLL electrical specifications

Table 22. SPLL electrical specifications

Symbol	Parameter	Min.	Typ.	Max.	Unit
F_{SPLL_REF}[1]	PLL Reference Frequency Range	8	—	16	MHz
F_{SPLL_Input}[2]	PLL Input Frequency	8	—	40	MHz
F_{VCO_CLK}	VCO output frequency	180	—	320	MHz
F_{SPLL_CLK}	PLL output frequency	90	—	160	MHz
J_{CYC_SPLL}	PLL Period Jitter (RMS)[3]				
	at F_{VCO_CLK} 180 MHz	—	120	—	ps
	at F_{VCO_CLK} 320 MHz	—	75	—	ps
J_{ACC_SPLL}	PLL accumulated jitter over 1µs (RMS)[3]				
	at F_{VCO_CLK} 180 MHz	—	1350	—	ps
	at F_{VCO_CLK} 320 MHz	—	600	—	ps
D_{UNL}	Lock exit frequency tolerance	± 4.47	—	± 5.97	%
T_{SPLL_LOCK}	Lock detector detection time[4]	—	—	$150 \times 10^{-6} + 1075(1/F_{SPLL_REF})$	s

1. F_{SPLL_REF} is PLL reference frequency range after the PREDIV. For PREDIV and MULT settings refer SCG_SPLLCFG register of Reference Manual.
2. F_{SPLL_Input} is PLL input frequency range before the PREDIV must be limited to the range 8 MHz to 40 MHz. This input source could be derived from a crystal oscillator or some other external square wave clock source using OSC bypass mode. For external clock source settings refer SCG_SOSCCFG register of Reference Manual.
3. This specification was obtained using a NXP developed PCB. PLL jitter is dependent on the noise characteristics of each PCB and results will vary
4. Lock detector detection time is defined as the time between PLL enablement and clock availability for system use.

6.3 Memory and memory interfaces

6.3.1 Flash memory module (FTFC) electrical specifications

This section describes the electrical characteristics of the flash memory module.

6.3.1.1 Flash timing specifications — commands

Table 23. Flash command timing specifications for S32K14x

Symbol	Description[1]		S32K142		S32K144		S32K146		S32K148			
			Typ	Max	Typ	Max	Typ	Max	Typ	Max	Unit	Notes
t_{rd1blk}	Read 1 Block execution time	32 KB flash	—	—	—	—	—	—	—	—	ms	
		64 KB flash	—	0.5	—	0.5	—	0.5	—	—		
		128 KB flash	—	—	—	—	—	—	—	—		
		256 KB flash	—	2	—	—	—	—	—	—		
		512 KB flash	—	—	—	1.8	—	2	—	2		
t_{rd1sec}	Read 1 Section execution time	2 KB flash	—	75	—	75	—	75	—	75	µs	
		4 KB flash	—	100	—	100	—	100	—	100		
t_{pgmchk}	Program Check execution time	—	—	95	—	95	—	95	—	100	µs	
t_{pgm8}	Program Phrase execution time	—	90	225	90	225	90	225	90	225	µs	
t_{ersblk}	Erase Flash Block execution time	32 KB flash	—	—	—	—	—	—	—	—	ms	2
		64 KB flash	30	550	30	550	30	550	—	—		
		128 KB flash	—	—	—	—	—	—	—	—		
		256 KB flash	250	2125	—	—	—	—	—	—		
		512 KB flash	—	—	250	4250	250	4250	250	4250		
t_{ersscr}	Erase Flash Sector execution time	—	12	130	12	130	12	130	12	130	ms	2
$t_{pgmsec1k}$	Program Section execution time (1KB flash)	—	5	—	5	—	5	—	5	—	ms	
t_{rd1all}	Read 1s All Block execution time	—	—	2.8	—	2.3	—	5.2	—	8.2	ms	
t_{rdonce}	Read Once execution time	—	—	30	—	30	—	30	—	30	µs	
$t_{pgmonce}$	Program Once execution time	—	90	—	90	—	90	—	90	—	µs	
t_{ersall}	Erase All Blocks execution time	—	250	2800	400	4900	700	10000	1400	17000	ms	2
t_{vfykey}	Verify Backdoor Access Key execution time	—	—	35	—	35	—	35	—	35	µs	
$t_{ersallu}$	Erase All Blocks Unsecure execution time	—	250	2800	400	4900	700	10000	1400	17000	ms	2
$t_{pgmpart}$	Program Partition for EEPROM execution time	32 KB EEPROM backup	70	—	70	—	70	—	—	—	ms	3
		64 KB EEPROM backup	71	—	71	—	71	—	150	—		

Table continues on the next page...

Table 23. Flash command timing specifications for S32K14x (continued)

Symbol	Description[1]		S32K142		S32K144		S32K146		S32K148			
			Typ	Max	Typ	Max	Typ	Max	Typ	Max	Unit	Notes
t_{setram}	Set FlexRAM Function execution time	Control Code 0xFF	0.08	—	0.08	—	0.08	—	0.08	—	ms	3
		32 KB EEPROM backup	0.8	1.2	0.8	1.2	0.8	1.2	—	—		
		48 KB EEPROM backup	1	1.5	1	1.5	1	1.5	—	—		
		64 KB EEPROM backup	1.3	1.9	1.3	1.9	1.3	1.9	1.3	1.9		
t_{eewr8b}	Byte write to FlexRAM execution time	32 KB EEPROM backup	385	1700	385	1700	385	1700	—	—	µs	3,4
		48 KB EEPROM backup	430	1850	430	1850	430	1850	—	—		
		64 KB EEPROM backup	475	2000	475	2000	475	2000	475	4000		
$t_{eewr16b}$	16-bit write to FlexRAM execution time	32 KB EEPROM backup	385	1700	385	1700	385	1700	—	—	µs	3,4
		48 KB EEPROM backup	430	1850	430	1850	430	1850	—	—		
		64 KB EEPROM backup	475	2000	475	2000	475	2000	475	4000		
$t_{eewr32bers}$	32-bit write to erased FlexRAM location execution time	—	360	2000	360	2000	360	2000	360	2000	µs	
$t_{eewr32b}$	32-bit write to FlexRAM execution time	32 KB EEPROM backup	630	2000	630	2000	630	2000	—	—	µs	3,4
		48 KB EEPROM backup	720	2125	720	2125	720	2125	—	—		
		64 KB EEPROM backup	810	2250	810	2250	810	2250	810	4500		
$t_{quickwr}$	32-bit Quick Write execution time: Time from CCIF clearing (start the write) until CCIF	1st 32-bit write	200	550	200	550	200	550	200	1100	µs	4,5,6
		2nd through Next to Last (Nth-1) 32-bit write	150	550	150	550	150	550	150	550		

Table continues on the next page...

Table 23. Flash command timing specifications for S32K14x (continued)

Symbol	Description[1]		S32K142		S32K144		S32K146		S32K148			
			Typ	Max	Typ	Max	Typ	Max	Typ	Max	Unit	Notes
	setting (32-bit write complete, ready for next 32-bit write)	Last (Nth) 32-bit write (time for write only, not cleanup)	200	550	200	550	200	550	200	550		
$t_{quickwrClnup}$	Quick Write Cleanup execution time	—	—	(# of Quick Writes) * 2.0	—	(# of Quick Writes) * 2.0	—	(# of Quick Writes) * 2.0	—	(# of Quick Writes) * 2.0	ms	7

1. All command times assumes 25 MHz or greater flash clock frequency (for synchronization time between internal/external clocks).
2. Maximum times for erase parameters based on expectations at cycling end-of-life.
3. For all EEPROM Emulation terms, the specified timing shown assumes previous record cleanup has occurred. This may be verified by executing FCCOB Command 0x77, and checking FCCOB number 5 contents show 0x00 - No EEPROM issues detected.
4. 1st time EERAM writes after a Reset or SETRAM may incur additional overhead for EEE cleanup, resulting in up to 2× the times shown.
5. Only after the Nth write completes will any data be valid. Emulated EEPROM record scheme cleanup overhead may occur after this point even after a brownout or reset. If power on reset occurs before the Nth write completes, the last valid record set will still be valid and the new records will be discarded.
6. Quick Write times may take up to 550 µs, as additional cleanup may occur when crossing sector boundaries.
7. Time for emulated EEPROM record scheme overhead cleanup. Automatically done after last (Nth) write completes, assuming still powered. Or via SETRAM cleanup execution command is requested at a later point.

Table 24. Flash command timing specifications for S32K11x

Symbol	Description[1]		S32K116		S32K118			
			Typ	Max	Typ	Max	Unit	Notes
t_{rd1blk}	Read 1 Block execution time	32 KB flash	—	0.36	—	0.36	ms	
		64 KB flash	—	—	—	—		
		128 KB flash	—	1.2	—	—		
		256 KB flash	—	—	—	2		
		512 KB flash	—	—	—	—		
t_{rd1sec}	Read 1 Section execution time	2 KB flash	—	75	—	75	µs	
		4 KB flash	—	100	—	100		
t_{pgmchk}	Program Check execution time	—	—	100	—	100	µs	
t_{pgm8}	Program Phrase execution time	—	90	225	90	225	µs	
t_{ersblk}	Erase Flash Block execution time	32 KB flash	15	300	15	300	ms	2
		64 KB flash	—	—	—	—		
		128 KB flash	120	1100	—	—		
		256 KB flash	—	—	250	2125		
		512 KB flash	—	—	—	—		

Table continues on the next page...

Table 24. Flash command timing specifications for S32K11x (continued)

Symbol	Description[1]		S32K116		S32K118			
			Typ	Max	Typ	Max	Unit	Notes
t_{ersscr}	Erase Flash Sector execution time	—	12	130	12	130	ms	2
$t_{pgmsec1k}$	Program Section execution time (1 KB flash)	—	5	—	5	—	ms	
t_{rd1all}	Read 1s All Block execution time	—	—	1.7	—	2.8	ms	
t_{rdonce}	Read Once execution time	—	—	30	—	30	µs	
$t_{pgmonce}$	Program Once execution time	—	90	—	90	—	µs	
t_{ersall}	Erase All Blocks execution time	—	150	1500	230	2500	ms	2
t_{vfykey}	Verify Backdoor Access Key execution time	—	—	35	—	35	µs	
$t_{ersallu}$	Erase All Blocks Unsecure execution time	—	150	1500	230	2500	ms	2
$t_{pgmpart}$	Program Partition for EEPROM execution time	32 KB EEPROM backup	71	—	71	—	ms	3
		64 KB EEPROM backup	—	—	—	—		
t_{setram}	Set FlexRAM Function execution time	Control Code 0xFF	0.08	—	0.08	—	ms	3
		32 KB EEPROM backup	0.8	1.2	0.8	1.2		
		48 KB EEPROM backup	—	—	—	—		
		64 KB EEPROM backup	—	—	—	—		
t_{eewr8b}	Byte write to FlexRAM execution time	32 KB EEPROM backup	385	1700	385	1700	µs	3,4
		48 KB EEPROM backup	—	—	—	—		
		64 KB EEPROM backup	—	—	—	—		
$t_{eewr16b}$	16-bit write to FlexRAM execution time	32 KB EEPROM backup	385	1700	385	1700	µs	3,4
		48 KB EEPROM backup	—	—	—	—		
		64 KB EEPROM backup	—	—	—	—		
$t_{eewr32bers}$	32-bit write to erased FlexRAM location execution time	—	360	2000	360	2000	µs	

Table continues on the next page...

Table 24. Flash command timing specifications for S32K11x (continued)

Symbol	Description[1]		S32K116		S32K118			
			Typ	Max	Typ	Max	Unit	Notes
$t_{eewr32b}$	32-bit write to FlexRAM execution time	32 KB EEPROM backup	630	2000	630	2000	µs	3,4
		48 KB EEPROM backup	—	—	—	—		
		64 KB EEPROM backup	—	—	—	—		
$t_{quickwr}$	32-bit Quick Write execution time: Time from CCIF clearing (start the write) until CCIF setting (32-bit write complete, ready for next 32-bit write)	1st 32-bit write	200	550	200	550	µs	4,5,6
		2nd through Next to Last (Nth-1) 32-bit write	150	550	150	550		
		Last (Nth) 32-bit write (time for write only, not cleanup)	200	550	200	550		
$t_{quickwrClnup}$	Quick Write Cleanup execution time	—	—	(# of Quick Writes) * 2.0	—	(# of Quick Writes) * 2.0	ms	7

1. All command times assume 25 MHz or greater flash clock frequency (for synchronization time between internal/external clocks).
2. Maximum times for erase parameters based on expectations at cycling end-of-life.
3. For all EEPROM Emulation terms, the specified timing shown assumes previous record cleanup has occurred. This may be verified by executing FCCOB Command 0x77, and checking FCCOB number 5 contents show 0x00 - No EEPROM issues detected.
4. 1st time EERAM writes after a Reset or SETRAM may incur additional overhead for EEE cleanup, resulting in up to 2x the times shown.
5. Only after the Nth write completes will any data be valid. Emulated EEPROM record scheme cleanup overhead may occur after this point even after a brownout or reset. If power on reset occurs before the Nth write completes, the last valid record set will still be valid and the new records will be discarded.
6. Quick Write times may take up to 550 µs, as additional cleanup may occur when crossing sector boundaries.
7. Time for emulated EEPROM record scheme overhead cleanup. Automatically done after last (Nth) write completes, assuming still powered. Or via SETRAM cleanup execution command is requested at a later point.

NOTE

Under certain circumstances FlexMEM maximum times may be exceeded. In this case the user or application may wait, or assert reset to the FTFC macro to stop the operation.

6.3.1.2 Reliability specifications

Table 25. NVM reliability specifications

Symbol	Description	Min.	Typ.	Max.	Unit	Notes
When using as Program and Data Flash						
$t_{nvmretp1k}$	Data retention after up to 1 K cycles	20	—	—	years	1
$n_{nvmcycp}$	Cycling endurance	1 K	—	—	cycles	2, 3

Table continues on the next page...

Table 25. NVM reliability specifications (continued)

Symbol	Description	Min.	Typ.	Max.	Unit	Notes
When using FlexMemory feature : FlexRAM as Emulated EEPROM						
$t_{nvmretee}$	Data retention	5	—	—	years	4
$n_{nvmwree16}$ $n_{nvmwree256}$	Write endurance • EEPROM backup to FlexRAM ratio = 16 • EEPROM backup to FlexRAM ratio = 256	100 K 1.6 M	— —	— —	writes writes	5, 6, 7

1. Data retention period per block begins upon initial user factory programming or after each subsequent erase.
2. Program and Erase for PFlash and DFlash are supported across product temperature specification in Normal Mode (not supported in HSRUN mode).
3. Cycling endurance is per DFlash or PFlash Sector.
4. Data retention period per block begins upon initial user factory programming or after each subsequent erase. Background maintenance operations during normal FlexRAM usage extend effective data retention life beyond 5 years.
5. FlexMemory write endurance specified for 16-bit and/or 32-bit writes to FlexRAM and is supported across product temperature specification in Normal Mode (not supported in HSRUN mode). Greater write endurance may be achieved with larger ratios of EEPROM backup to FlexRAM.
6. For usage of any EEE driver other than the FlexMemory feature, the endurance spec will fall back to the specified endurance value of the D-Flash specification (1K).
7. FlexMemory calculator tool is available at NXP web site for help in estimation of the maximum write endurance achievable at specific EEPROM/FlexRAM ratios. The “In Spec” portions of the online calculator refer to the NVM reliability specifications section of data sheet. This calculator is only applies to the FlexMemory feature.

6.3.2 QuadSPI AC specifications

The following table describes the QuadSPI electrical characteristics.

- Measurements are with maximum output load of 25 pF, input transition of 1 ns and pad configured with fastest slew settings (DSE = 1'b1).
- I/O operating voltage ranges from 2.97 V to 3.6 V
- While doing the mode transition (RUN -> HSRUN or HSRUN -> RUN), the interface should be OFF.
- Add 50 ohm series termination on board in QuadSPI SCK for Flash A to avoid loop back reflection when using in Internal DQS (PAD Loopback) mode.
- QuadSPI trace length should be 3 inches.
- For non-Quad mode of operation if external device doesn’t have pull-up feature, external pull-up needs to be added at board level for non-used pads.
- With external pull-up, performance of the interface may degrade based on load associated with external pull-up.

Table 26. QuadSPI electrical specifications

FLASH PORT	Sym	Unit	FLASH A												FLASH B			
			RUN[1]						HSRUN[1]						RUN/HSRUN[2]			
QuadSPI Mode			SDR						SDR						SDR		DDR[3]	
			Internal Sampling		Internal DQS				Internal Sampling		Internal DQS				Internal Sampling		External DQS	
			N1		PAD Loopback		Internal Loopback		N1		PAD Loopback		Internal Loopback		N1		External DQS	
			Min	Max	Min	Max	Min	Max	Min	Max	Min	Max	Min	Max	Min	Max	Min	Max
Register Settings																		
MCR[DDR_EN]		-	0		0		0		0		0		0		0		1	
MCR[DQS_EN]		-	0		1		1		0		1		1		0		1	
MCR[SCLKCFG[0]]		-	-		1		0		-		1		0		-		-	
MCR[SCLKCFG[1]]		-	-		1		0		-		1		0		-		-	
MCR[SCLKCFG[2]]		-	-		-		-		-		-		-		-		0	
MCR[SCLKCFG[3]]		-	-		-		-		-		-		-		-		0	
MCR[SCLKCFG[5]]		-	0		0		0		0		0		0		0		1	
SMPR[FSPHS]		-	0		1		0		0		1		0		0		0	
SMPR[FSDLY]		-	0		0		0		0		0		0		0		0	
SOCCR [SOCCFG[7:0]]			-		0		23		-		0		30		-		-	
SOCCR[SOCCFG[15:8]]		-	-		-		-		-		-		-		-		30	
FLSHCR[TDH]		-	0x00		0x00		0x00		0x00		0x00		0x00		0x00		0x01	
Timing Parameters																		
SCK Clock Frequency	f_{SCK}	MHz	-	38	-	64	-	48	-	40	-	80	-	50	-	20	-	20[4]
SCK Clock Period	t_{SCK}	ns	1/fSCK	-	1/fSCK	-	1/fSCK	-	1/fSCK	-	1/fSCK	-	1/fSCK	-	50.0	-	50.0[4]	-

Table continues on the next page...

Table 26. QuadSPI electrical specifications (continued)

FLASH PORT	Sym	Unit	FLASH A												FLASH B			
			RUN[1]						HSRUN[1]						RUN/HSRUN[2]			
QuadSPI Mode			SDR						SDR						SDR		DDR[3]	
			Internal Sampling		Internal DQS				Internal Sampling		Internal DQS				Internal Sampling		External DQS	
			N1		PAD Loopback		Internal Loopback		N1		PAD Loopback		Internal Loopback		N1		External DQS	
			Min	Max	Min	Max	Min	Max	Min	Max	Min	Max	Min	Max	Min	Max	Min	Max
SCK Duty Cycle	t_{SDC}	ns	tSCK/2 - 1.5	tSCK/2 + 1.5	tSCK/2 - 1.5	tSCK/2 + 1.5	tSCK/2 - 1.5	tSCK/2 + 1.5	tSCK/2 - 1.5	tSCK/2 + 1.5	tSCK/2 - 0.750	tSCK/2 - 0.750	tSCK/2 - 1.5	tSCK/2 + 1.5	tSCK/2 - 2.5	tSCK/2 + 2.5	tSCK/2 - 2.5	tSCK/2 + 2.5
Data Input Setup Time	t_{IS}	ns	15	-	2.5	-	10	-	14	-	1.6	-	9	-	25	-	2	-
Data Input Hold Time	t_{IH}	ns	0	-	1	-	1	-	0	-	1	-	1	-	0	-	20	-
Data Output Valid Time	t_{OV}	ns	-	4.5	-	4.5	-	4.5	-	4	-	4	-	4	-	10	-	10
Data Output In-Valid Time	t_{IV}	ns	-	5	-	5	-	5	-	5	-	3[5]	-	5	-	5	5	-
CS to SCK Time [6]	t_{CSSCK}	ns	5	-	5	-	5	-	5	-	5	-	5	-	10	-	10	-
SCK to CS Time [7]	t_{SCKCS}	ns	5	-	5	-	5	-	5	-	5	-	5	-	5	-	5	-
Output Load		pf	25		25		25		25		25		25		25		25	

1. See Reference Manual for details on mode settings
2. See Reference Manual for details on mode settings
3. Valid for HyperRAM only
4. RWDS(External DQS CLK) frequency
5. For operating frequency ≤ 64 Mhz,Output invalid time is 5 ns.
6. Program register value QuadSPI_FLSHCR[TCSS] = 4`h2
7. Program register value QuadSPI_FLSHCR[TCSH] = 4`h1

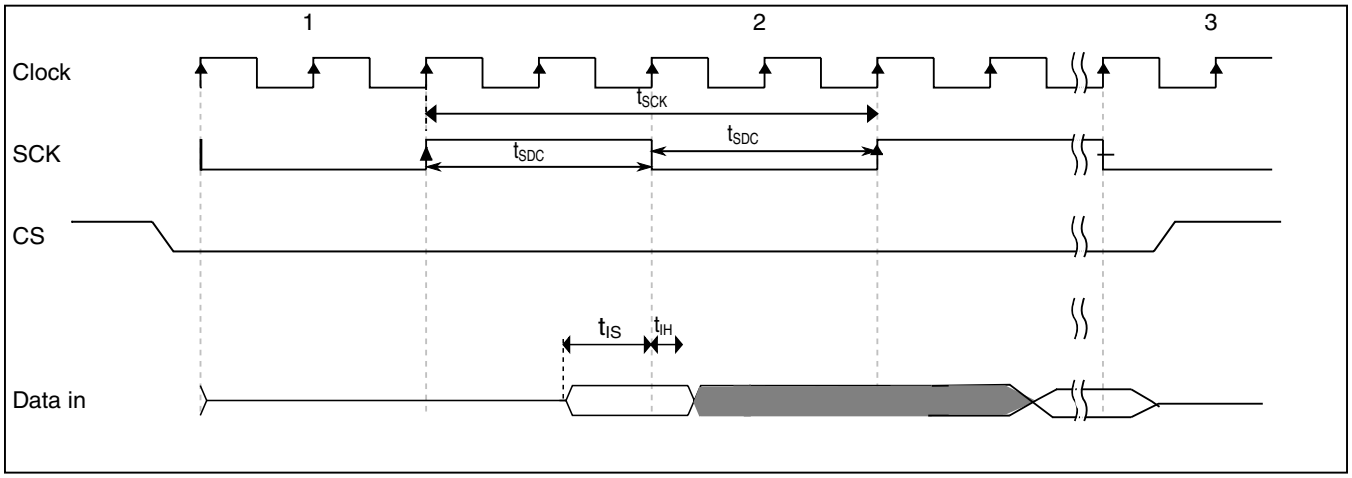

Figure 9. QuadSPI input timing (SDR mode) diagram

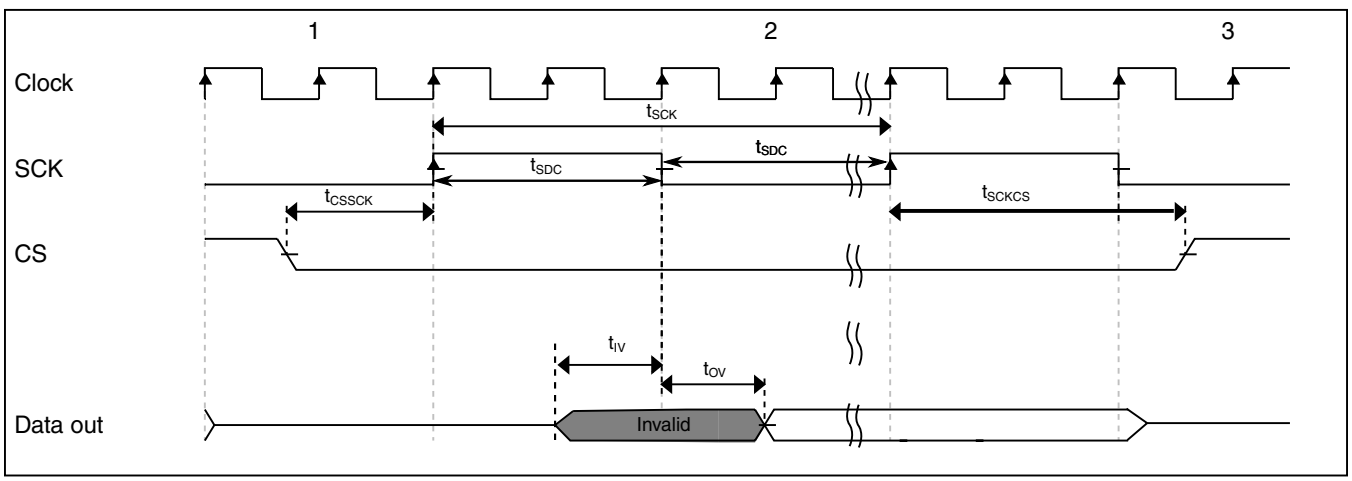

Figure 10. QuadSPI output timing (SDR mode) diagram

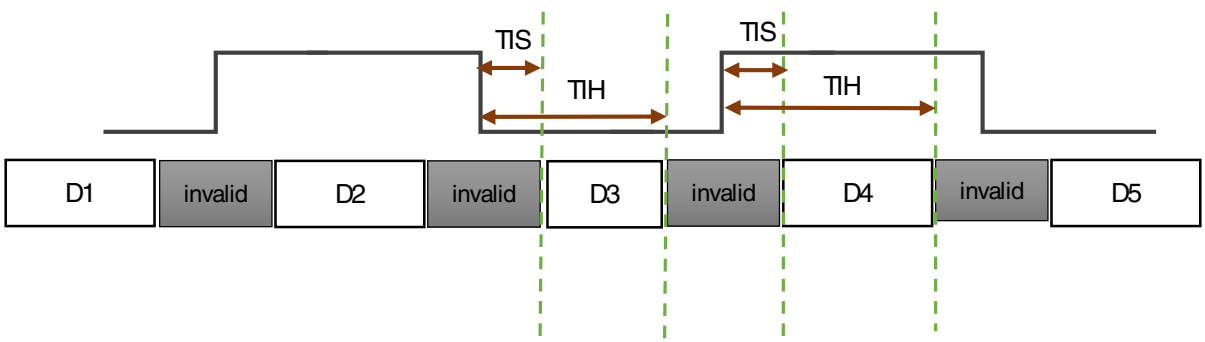

TIS – Setup Time
TIH – Hold Time

Figure 11. QuadSPI input timing (HyperRAM mode) diagram

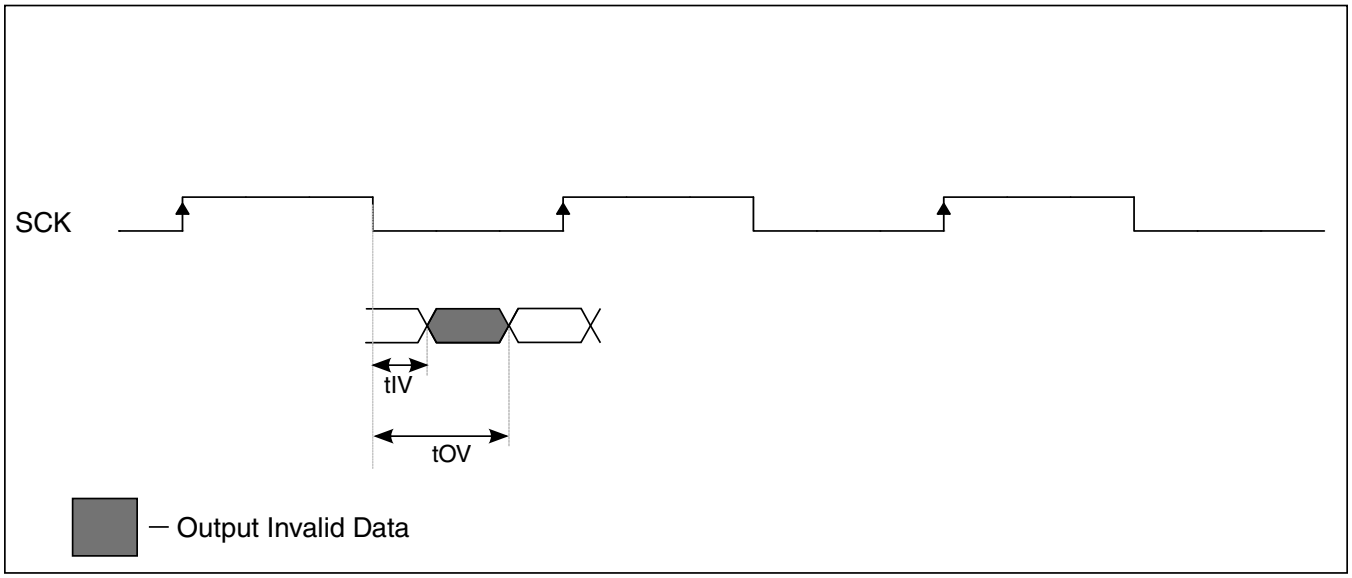

Figure 12. QuadSPI output timing (HyperRAM mode) diagram

6.4 Analog modules

6.4.1 ADC electrical specifications

6.4.1.1 12-bit ADC operating conditions

Table 27. 12-bit ADC operating conditions

Symbol	Description	Conditions	Min.	Typ.[1]	Max.	Unit	Notes
V_{REFH}	ADC reference voltage high		See Voltage and current operating requirements for values	V_{DDA}	See Voltage and current operating requirements for values	V	2
V_{REFL}	ADC reference voltage low		See Voltage and current operating requirements for values	0	See Voltage and current operating requirements for values	mV	2
V_{ADIN}	Input voltage		V_{REFL}	—	V_{REFH}	V	
R_S	Source impedendance	f_{ADCK} < 4 MHz	—	—	5	kΩ	
R_{SW1}	Channel Selection Switch Impedance		—	0.75	1.2	kΩ	
R_{AD}	Sampling Switch Impedance		—	2	5	kΩ	
C_{P1}	Pin Capacitance		—	10	—	pF	
C_{P2}	Analog Bus Capacitance		—	—	4	pF	
C_S	Sampling capacitance		—	4	5	pF	

Table continues on the next page...

Table 27. 12-bit ADC operating conditions (continued)

Symbol	Description	Conditions	Min.	Typ.[1]	Max.	Unit	Notes
f_{ADCK}	ADC conversion clock frequency	Normal usage	2	40	50	MHz	3, 4
f_{CONV}	ADC conversion frequency	No ADC hardware averaging.[5] Continuous conversions enabled, subsequent conversion time	46.4	928	1160	Ksps	6, 7
		ADC hardware averaging set to 32. [5] Continuous conversions enabled, subsequent conversion time	1.45	29	36.25	Ksps	6, 7

1. Typical values assume V_{DDA} = 5 V, Temp = 25 °C, f_{ADCK} = 40 MHz, R_{AS}=20 Ω, and C_{AS}=10 nF unless otherwise stated. Typical values are for reference only, and are not tested in production.
2. For packages without dedicated V_{REFH} and V_{REFL} pins, V_{REFH} is internally tied to V_{DDA}, and V_{REFL} is internally tied to V_{SS}. To get maximum performance, reference supply quality should be better than SAR ADC. See application note AN5032 for details.
3. Clock and compare cycle need to be set according to the guidelines mentioned in the *Reference Manual* .
4. ADC conversion will become less reliable above maximum frequency.
5. When using ADC hardware averaging, see the *Reference Manual* to determine the most appropriate setting for AVGS.
6. Numbers based on the minimum sampling time of 275 ns.
7. For guidelines and examples of conversion rate calculation, see the *Reference Manual* section 'Calibration function'

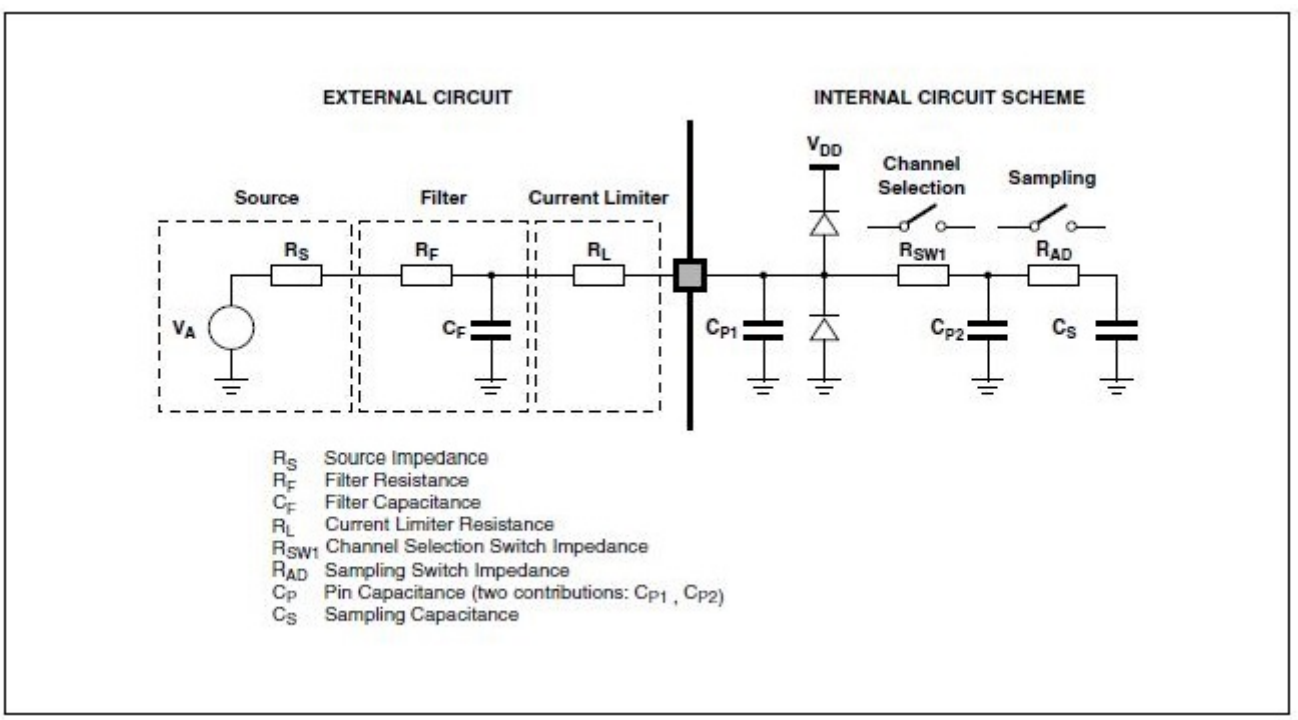

Figure 13. ADC input impedance equivalency diagram

6.4.1.2 12-bit ADC electrical characteristics

NOTE

- ADC performance specifications are documented using a single ADC. For parallel/simultaneous operation of both ADCs, either for sampling the same channel by both ADCs or for sampling different channels by each ADC, some amount of decrease in performance can be expected. Care must be taken to stagger the two ADC conversions, in particular the sample phase, to minimize the impact of simultaneous conversions.
- On reduced pin packages where ADC reference pins are shared with supply pins, ADC analog performance characteristics may be impacted. The amount of variation will be directly impacted by the external PCB layout and hence care must be taken with PCB routing. See AN5426 for details

Table 28. 12-bit ADC characteristics (2.7 V to 3 V) ($V_{REFH} = V_{DDA}$, $V_{REFL} = V_{SS}$)

Symbol	Description	Conditions [1]	Min.	Typ.[2]	Max.	Unit	Notes
V_{DDA}	Supply voltage		2.7	—	3	V	
I_{DDA_ADC}	Supply current per ADC		—	0.6	—	mA	3
SMPLTS	Sample Time		275	—	Refer to the *Reference Manual*	ns	
TUE[4]	Total unadjusted error		—	±4	±8	LSB[5]	6, 7, 8, 9
DNL	Differential non-linearity		—	±1.0	—	LSB[5]	6, 7, 8, 9
INL	Integral non-linearity		—	±2.0	—	LSB[5]	6, 7, 8, 9

1. All accuracy numbers assume the ADC is calibrated with $V_{REFH}=V_{DDA}=V_{DD}$, with the calibration frequency set to less than or equal to half of the maximum specified ADC clock frequency.
2. Typical values assume V_{DDA} = 3 V, Temp = 25 °C, f_{ADCK} = 40 MHz, R_{AS}=20 Ω, and C_{AS}=10 nF.
3. The ADC supply current depends on the ADC conversion rate.
4. Represents total static error, which includes offset and full scale error.
5. 1 LSB = $(V_{REFH} - V_{REFL})/2^N$
6. The specifications are with averaging and in standalone mode only. Performance may degrade depending upon device use case scenario. When using ADC averaging, refer to the *Reference Manual* to determine the most appropriate settings for AVGS.
7. For ADC signals adjacent to V_{DD}/V_{SS} or XTAL/EXTAL or high frequency switching pins, some degradation in the ADC performance may be observed.
8. All values guarantee the performance of the ADC for multiple ADC input channel pins. When using ADC to monitor the internal analog parameters, assume minor degradation.
9. All the parameters in the table are given assuming system clock as the clocking source for ADC.

Table 29. 12-bit ADC characteristics (3 V to 5.5 V)($V_{REFH} = V_{DDA}$, $V_{REFL} = V_{SS}$)

Symbol	Description	Conditions [1]	Min.	Typ.[2]	Max.	Unit	Notes
V_{DDA}	Supply voltage		3	—	5.5	V	
I_{DDA_ADC}	Supply current per ADC		—	1	—	mA	3
SMPLTS	Sample Time		275	—	Refer to the *Reference Manual*	ns	
TUE[4]	Total unadjusted error		—	±4	±8	LSB[5]	6, 7, 8, 9
DNL	Differential non-linearity		—	±0.7	—	LSB[5]	6, 7, 8, 9
INL	Integral non-linearity		—	±1.0	—	LSB[5]	6, 7, 8, 9

1. All accuracy numbers assume the ADC is calibrated with V_{REFH}=V_{DDA}=V_{DD}, with the calibration frequency set to less than or equal to half of the maximum specified ADC clock frequency.
2. Typical values assume V_{DDA} = 5.0 V, Temp = 25 °C, f_{ADCK} = 40 MHz, R_{AS}=20 Ω, and C_{AS}=10 nF unless otherwise stated.
3. The ADC supply current depends on the ADC conversion rate.
4. Represents total static error, which includes offset and full scale error.
5. 1 LSB = $(V_{REFH} - V_{REFL})/2^N$
6. The specifications are with averaging and in standalone mode only. Performance may degrade depending upon device use case scenario. When using ADC averaging, refer to the *Reference Manual* to determine the most appropriate settings for AVGS.
7. For ADC signals adjacent to V_{DD}/V_{SS} or XTAL/EXTAL or high frequency switching pins, some degradation in the ADC performance may be observed.
8. All values guarantee the performance of the ADC for multiple ADC input channel pins. When using ADC to monitor the internal analog parameters, assume minor degradation.
9. All the parameters in the table are given assuming system clock as the clocking source for ADC.

NOTE

- Due to triple bonding in lower pin packages like 32-QFN, 48-LQFP, and 64-LQFP degradation might be seen in ADC parameters.
- When using high speed interfaces such as the QuadSPI, SAI0, SAI1 or ENET there may be some ADC degradation on the adjacent analog input paths. See following table for details.

Pin name	TGATE purpose
PTE8	CMP0_IN3
PTC3	ADC0_SE11/CMP0_IN4
PTC2	ADC0_SE10/CMP0_IN5
PTD7	CMP0_IN6
PTD6	CMP0_IN7
PTD28	ADC1_SE22
PTD27	ADC1_SE21

6.4.2 CMP with 8-bit DAC electrical specifications

Table 31. Comparator with 8-bit DAC electrical specifications

Symbol	Description	Min.	Typ.	Max.	Unit
I_{DDHS}	Supply current, High-speed mode[1]				µA
	-40 - 125 °C	—	230	300	
I_{DDLS}	Supply current, Low-speed mode[1]				µA
	-40 - 105 °C	—	6	11	
	-40 - 125 °C		6	13	
V_{AIN}	Analog input voltage	0	0 - V_{DDA}	V_{DDA}	V
V_{AIO}	Analog input offset voltage, High-speed mode				mV
	-40 - 125 °C	-25	±1	25	
V_{AIO}	Analog input offset voltage, Low-speed mode				mV
	-40 - 125 °C	-40	±4	40	
t_{DHSB}	Propagation delay, High-speed mode[2]				ns
	-40 - 105 °C	—	35	200	
	-40 - 125 °C		35	300	
t_{DLSB}	Propagation delay, Low-speed mode[2]				µs
	-40 - 105 °C	—	0.5	2	
	-40 - 125 °C	—	0.5	3	
t_{DHSS}	Propagation delay, High-speed mode[3]				ns
	-40 - 105 °C	—	70	400	
	-40 - 125 °C	—	70	500	
t_{DLSS}	Propagation delay, Low-speed mode[3]				µs
	-40 - 105 °C	—	1	5	
	-40 - 125 °C	—	1	5	
t_{IDHS}	Initialization delay, High-speed mode[4]				µs
	-40 - 125 °C	—	1.5	3	
t_{IDLS}	Initialization delay, Low-speed mode[4]				µs
	-40 - 125 °C	—	10	30	
V_{HYST0}	Analog comparator hysteresis, Hyst0				mV
	-40 - 125 °C	—	0	—	
V_{HYST1}	Analog comparator hysteresis, Hyst1, High-speed mode				mV
	-40 - 125 °C	—	19	66	
	Analog comparator hysteresis, Hyst1, Low-speed mode				
	-40 - 125 °C	—	15	40	
V_{HYST2}	Analog comparator hysteresis, Hyst2, High-speed mode				mV
	-40 - 125 °C	—	34	133	

Table continues on the next page...

Table 31. Comparator with 8-bit DAC electrical specifications (continued)

Symbol	Description	Min.	Typ.	Max.	Unit
	Analog comparator hysteresis, Hyst2, Low-speed mode				
	-40 - 125 °C	—	23	80	
V_{HYST3}	Analog comparator hysteresis, Hyst3, High-speed mode				mV
	-40 - 125 °C	—	46	200	
	Analog comparator hysteresis, Hyst3, Low-speed mode				
	-40 - 125 °C	—	32	120	
I_{DAC8b}	8-bit DAC current adder (enabled)				
	3.3V Reference Voltage	—	6	9	μA
	5V Reference Voltage	—	10	16	μA
INL[5]	8-bit DAC integral non-linearity	–0.75	—	0.75	LSB[6]
DNL	8-bit DAC differential non-linearity	–0.5	—	0.5	LSB[6]
t_{DDAC}	Initialization and switching settling time	—	—	30	μs

1. Difference at input > 200mV
2. Applied ± (100 mV + $V_{HYST0/1/2/3}$+ max. of V_{AIO}) around switch point.
3. Applied ± (30 mV + 2 × $V_{HYST0/1/2/3}$+ max. of V_{AIO}) around switch point.
4. Applied ± (100 mV + $V_{HYST0/1/2/3}$).
5. Calculation method used: Linear Regression Least Square Method
6. 1 LSB = $V_{reference}$/256

NOTE

For comparator IN signals adjacent to V_{DD}/V_{SS} or XTAL/EXTAL or switching pins cross coupling may happen and hence hysteresis settings can be used to obtain the desired comparator performance. Additionally, an external capacitor (1nF) should be used to filter noise on input signal. Also, source drive should not be weak (Signal with < 50 K pull up/down is recommended).

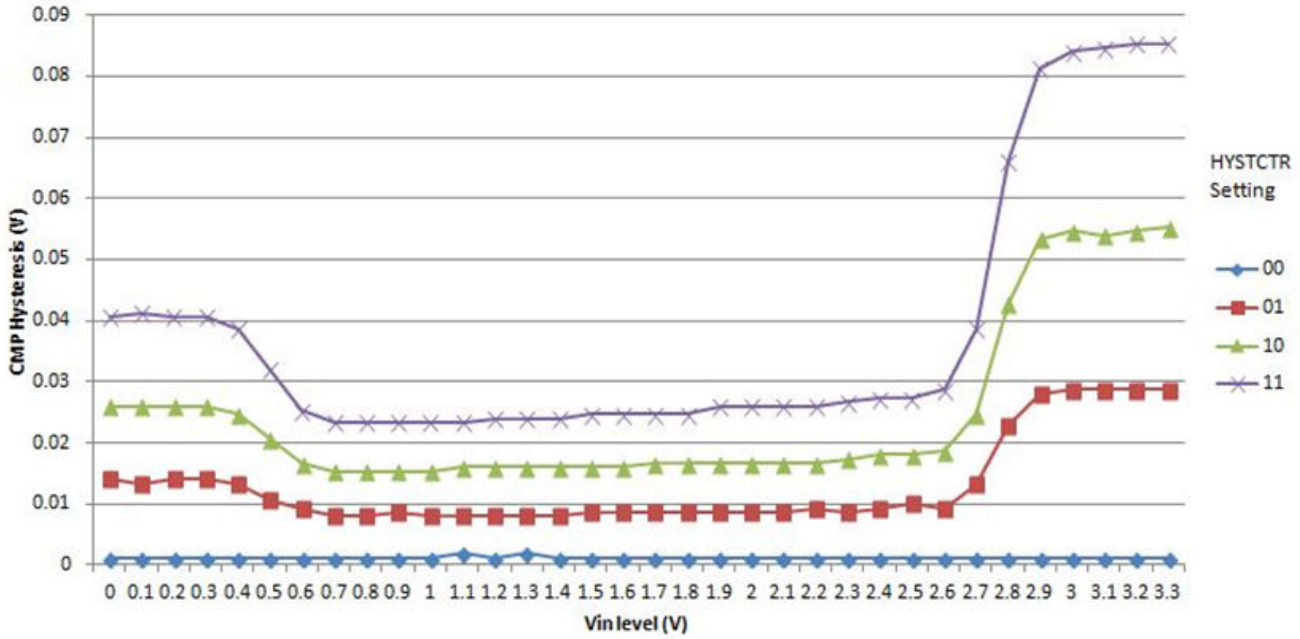

Figure 14. Typical hysteresis vs. Vin level (VDDA = 3.3 V, PMODE = 0)

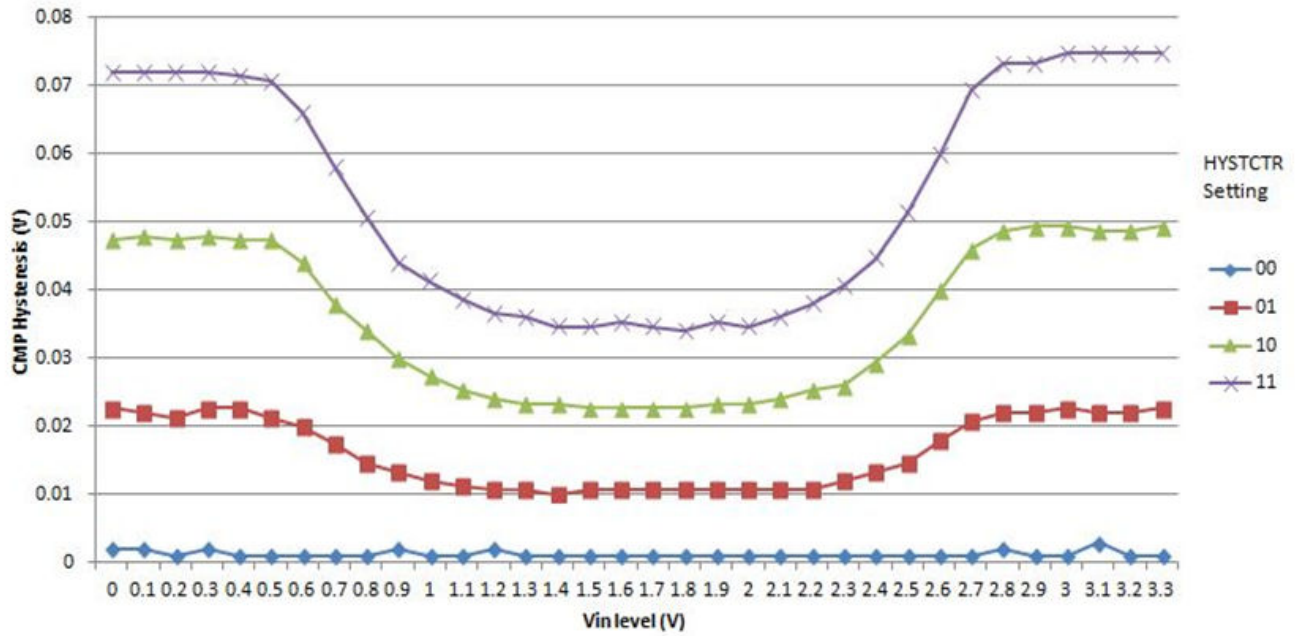

Figure 15. Typical hysteresis vs. Vin level (VDDA = 3.3 V, PMODE = 1)

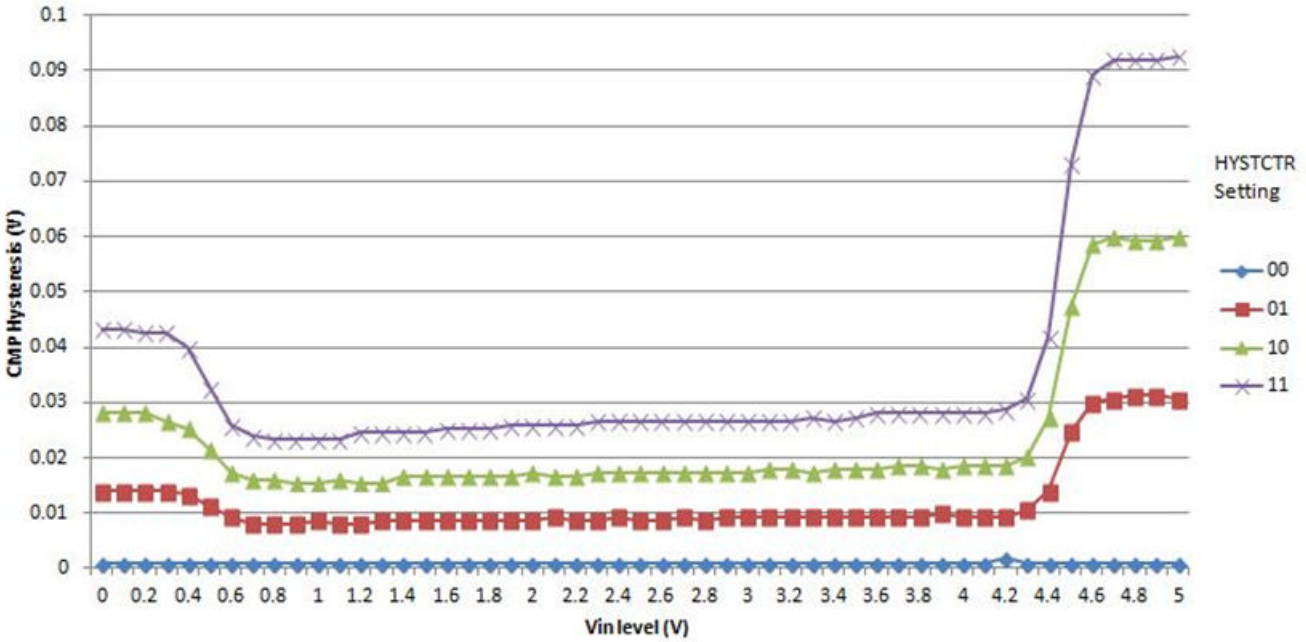

Figure 16. Typical hysteresis vs. Vin level (VDDA = 5 V, PMODE = 0)

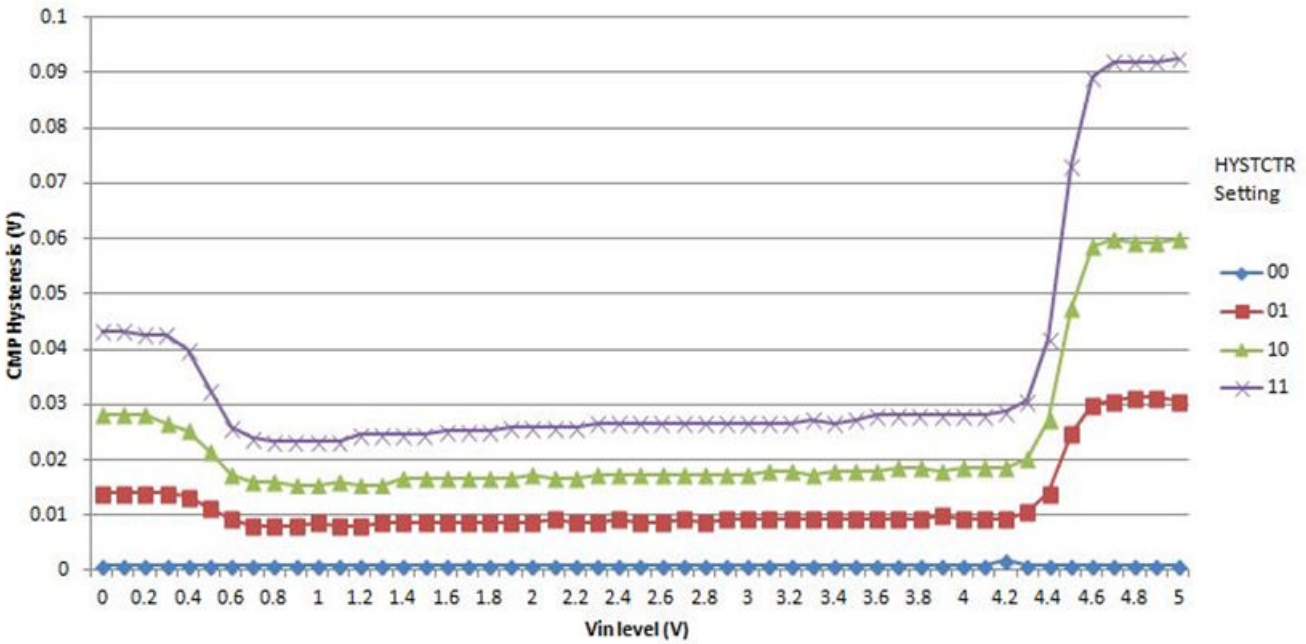

Figure 17. Typical hysteresis vs. Vin level (VDDA = 5 V, PMODE = 1)

6.5 Communication modules

6.5.1 LPUART electrical specifications

Refer to General AC specifications for LPUART specifications.

6.5.1.1 Supported baud rate

Baud rate = Baud clock / ((OSR+1) * SBR).

For details, see section: 'Baud rate generation' of the *Reference Manual*.

6.5.2 LPSPI electrical specifications

The Low Power Serial Peripheral Interface (LPSPI) provides a synchronous serial bus with master and slave operations. Many of the transfer attributes are programmable. The following tables provide timing characteristics for classic LPSPI timing modes.

- All timing is shown with respect to 20% V_{DD} and 80% V_{DD} thresholds.
- All measurements are with maximum output load of 50 pF, input transition of 1 ns and pad configured with fastest slew setting (DSE = 1).

Table 32. LPSPI electrical specifications[1]

Num	Symbol	Description	Conditions	Run Mode[2]				HSRUN Mode[2]				VLPR Mode				Unit
				5.0 V IO		3.3 V IO		5.0 V IO		3.3 V IO		5.0 V IO		3.3 V IO		
				Min.	Max.	Min.	Max.	Min.	Max.	Min.	Max.	Min.	Max.	Min.	Max.	
	f_{periph}[3, 4]	Peripheral Frequency	Slave	-	40	-	40	-	56	-	56	-	4	-	4	MHz
			Master	-	40	-	40	-	56	-	56	-	4	-	4	
			Master Loopback[5]	-	40	-	48	-	48	-	48	-	4	-	4	
			Master Loopback(slow)[6]	-	48	-	48	-	48	-	48	-	4	-	4	
1	f_{op}	Frequency of operation	Slave	-	10	-	10	-	14	-	14[7]	-	2	-	2	MHz
			Master	-	10	-	10	-	14	-	14[7]	-	2	-	2	
			Master Loopback[5]	-	20	-	12	-	24	-	12	-	2	-	2	
			Master Loopback(slow)[6]	-	12	-	12	-	12	-	12	-	2	-	2	
2	t_{SPSCK}	SPSCK period	Slave	100	-	100	-	72	-	72	-	500	-	500	-	ns
			Master	100	-	100	-	72	-	72	-	500	-	500	-	
			Master Loopback[5]	50	-	83	-	42	-	83	-	500	-	500	-	
			Master Loopback(slow)[6]	83	-	83	-	83	-	83	-	500	-	500	-	
3	t_{Lead}[8]	Enable lead time (PCS to SPSCK delay)	Slave	-	-	-	-	-	-	-	-	-	-	-	-	ns
			Master	$(PCSSCK+1)*t_{periph}-25$	-	$(PCSSCK+1)*t_{periph}-25$	-	$(PCSSCK+1)*t_{periph}-25$	-	$(PCSSCK+1)*t_{periph}-25$	-	$(PCSSCK+1)*t_{periph}-50$	-	$(PCSSCK+1)*t_{periph}-50$	-	
			Master Loopback[5]													
			Master Loopback(slow)[6]													

Table continues on the next page...

Table 32. LPSPI electrical specifications[1] (continued)

Num	Symbol	Description	Conditions	Run Mode[2]				HSRUN Mode[2]				VLPR Mode				Unit
				5.0 V IO		3.3 V IO		5.0 V IO		3.3 V IO		5.0 V IO		3.3 V IO		
				Min.	Max.	Min.	Max.	Min.	Max.	Min.	Max.	Min.	Max.	Min.	Max.	
4	t_{Lag}[9]	Enable lag time (After SPSCK delay)	Slave	-	-	-	-	-	-	-	-	-	-	-	-	ns
			Master	(SCKPCS+1)*t_{periph}- 25	-	(SCKPCS+1)*t_{periph}- 25	-	(SCKPCS+1)*t_{periph}- 25	-	(SCKPCS+1)*t_{periph}- 25	-	(SCKPCS+1)*t_{periph}- 50	-	(SCKPCS+1)*t_{periph}- 50	-	
			Master Loopback[5]													
			Master Loopback(slow)[6]													
5	t_{WSPSCK}[10]	Clock(SPSCK) high or low time (SPSCK duty cycle)	Slave	t_{SPSCK}/2-3	t_{SPSCK}/2+3	t_{SPSCK}/2-3	t_{SPSCK}/2+3	t_{SPSCK}/2-3	t_{SPSCK}/2+3	t_{SPSCK}/2-3	t_{SPSCK}/2+3	t_{SPSCK}/2-5	t_{SPSCK}/2+5	t_{SPSCK}/2-5	t_{SPSCK}/2+5	ns
			Master													
			Master Loopback[5]													
			Master Loopback(slow)[6]													
6	t_{SU}	Data setup time(inputs)	Slave	3	-	5	-	3	-	5	-	18	-	18	-	ns
			Master	29	-	38	-	26	-	37[11] 32 [12]	-	72	-	78	-	
			Master Loopback[5]	7	-	8	-	5	-	7	-	20	-	20	-	
			Master Loopback(slow)[6]	8	-	10	-	7	-	9	-	20	-	20	-	
7	t_{HI}	Data hold time(inputs)	Slave	3	-	3	-	3	-	3	-	14	-	14	-	ns
			Master	0	-	0	-	0	-	0	-	0	-	0	-	
			Master Loopback[5]	3	-	3	-	2	-	3	-	11	-	11	-	
			Master Loopback(slow)[6]	3	-	3	-	3	-	3	-	12	-	12	-	

Table continues on the next page...

Table 32. LPSPI electrical specifications[1] (continued)

Num	Symbol	Description	Conditions	Run Mode[2]				HSRUN Mode[2]				VLPR Mode				Unit
				5.0 V IO		3.3 V IO		5.0 V IO		3.3 V IO		5.0 V IO		3.3 V IO		
				Min.	Max.	Min.	Max.	Min.	Max.	Min.	Max.	Min.	Max.	Min.	Max.	
8	t_a	Slave access time	Slave	-	50	-	50	-	50	-	50	-	100	-	100	ns
9	t_{dis}	Slave MISO (SOUT) disable time	Slave	-	50	-	50	-	50	-	50	-	100	-	100	ns
10	t_v	Data valid (after SPSCK edge)	Slave	-	30	-	39	-	26	-	36 [11] 31 [12]	-	92	-	96	ns
			Master	-	12	-	16	-	11	-	15	-	47	-	48	
			Master Loopback[5]	-	12	-	16	-	11	-	15	-	47	-	48	
			Master Loopback(slow)[6]	-	8	-	10	-	7	-	9	-	44	-	44	
11	t_{HO}	Data hold time(outputs)	Slave	4	-	4	-	4	-	4	-	4	-	4	-	ns
			Master	-15	-	-22	-	-15	-	-23	-	-22	-	-29	-	
			Master Loopback[5]	-10	-	-14	-	-10	-	-14	-	-14	-	-19	-	
			Master Loopback(slow)[6]	-15	-	-22	-	-15	-	-22	-	-21	-	-27	-	
12	$t_{RI/FI}$	Rise/Fall time input	Slave	-	1	-	1	-	1	-	1	-	1	-	1	ns
			Master	-		-		-		-		-		-		
			Master Loopback[5]	-		-		-		-		-		-		
			Master Loopback(slow)[6]	-		-		-		-		-		-		
13	$t_{RO/FO}$	Rise/Fall time output	Slave	-	25	-	25	-	25	-	25	-	25	-	25	ns
			Master	-		-		-		-		-		-		
			Master Loopback [5]	-		-		-		-		-		-		

Table continues on the next page...

Table 32. LPSPI electrical specifications[1] (continued)

Num	Symbol	Description	Conditions	Run Mode[2]				HSRUN Mode[2]				VLPR Mode				Unit
				5.0 V IO		3.3 V IO		5.0 V IO		3.3 V IO		5.0 V IO		3.3 V IO		
				Min.	Max.	Min.	Max.	Min.	Max.	Min.	Max.	Min.	Max.	Min.	Max.	
			Master Loopback(slow) [6]	-		-		-		-		-		-		

1. Trace length should not exceed 11 inches for SCK pad when used in Master loopback mode.
2. While transitioning from HSRUN mode to RUN mode, LPSPI output clock should not be more than 14 MHz.
3. f_{periph} = LPSPI peripheral clock
4. $t_{periph} = 1/f_{periph}$
5. Master Loopback mode - In this mode LPSPI_SCK clock is delayed for sampling the input data which is enabled by setting LPSPI_CFGR1[SAMPLE] bit as 1. Clock pads used are PTD15 and PTE0. Applicable only for LPSPI0.
6. Master Loopback (slow) - In this mode LPSPI_SCK clock is delayed for sampling the input data which is enabled by setting LPSPI_CFGR1[SAMPLE] bit as 1. Clock pad used is PTB2. Applicable only for LPSPI0.
7. This is the maximum operating frequency (f_{op}) for LPSPI0 with medium PAD type only. Otherwise, the maximum operating frequency (f_{op}) is 12 Mhz.
8. Set the PCSSCK configuration bit as 0, for a minimum of 1 delay cycle of LPSPI baud rate clock, where PCSSCK ranges from 0 to 255.
9. Set the SCKPCS configuration bit as 0, for a minimum of 1 delay cycle of LPSPI baud rate clock, where SCKPCS ranges from 0 to 255.
10. While selecting odd dividers, ensure Duty Cycle is meeting this parameter.
11. Maximum operating frequency (f_{op}) is 12 MHz irrespective of PAD type and LPSPI instance.
12. Applicable for LPSPI0 only with medium PAD type, with maximum operating frequency (f_{op}) as 14 MHz.

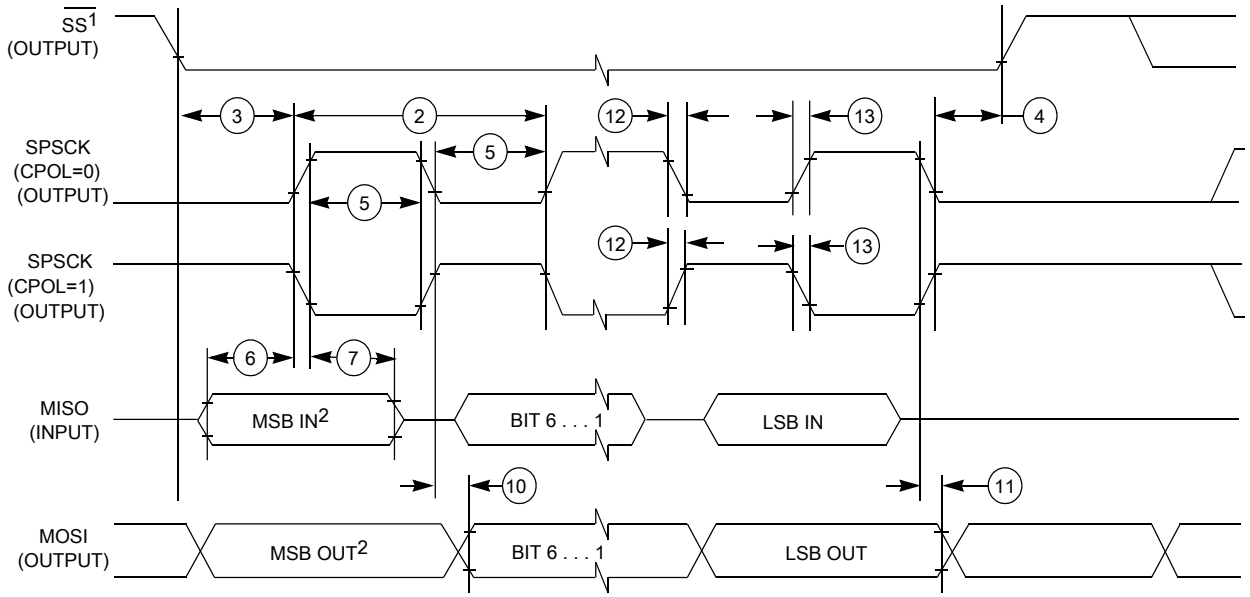

1. If configured as an output.
2. LSBF = 0. For LSBF = 1, bit order is LSB, bit 1, ..., bit 6, MSB.

Figure 18. LPSPI master mode timing (CPHA = 0)

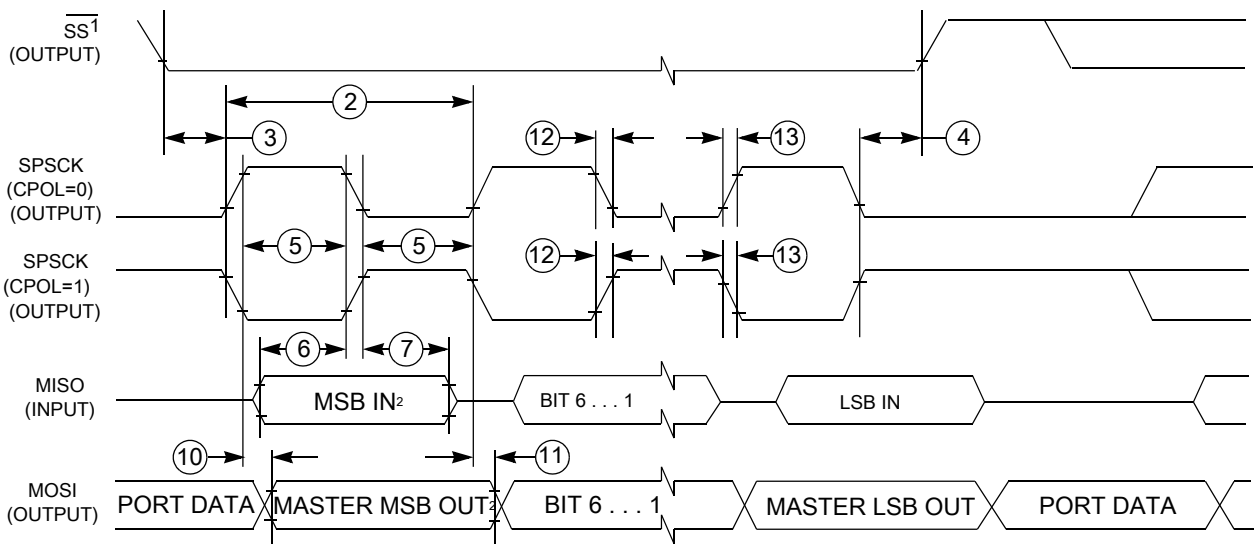

1.If configured as output
2. LSBF = 0. For LSBF = 1, bit order is LSB, bit 1, ..., bit 6, MSB.

Figure 19. LPSPI master mode timing (CPHA = 1)

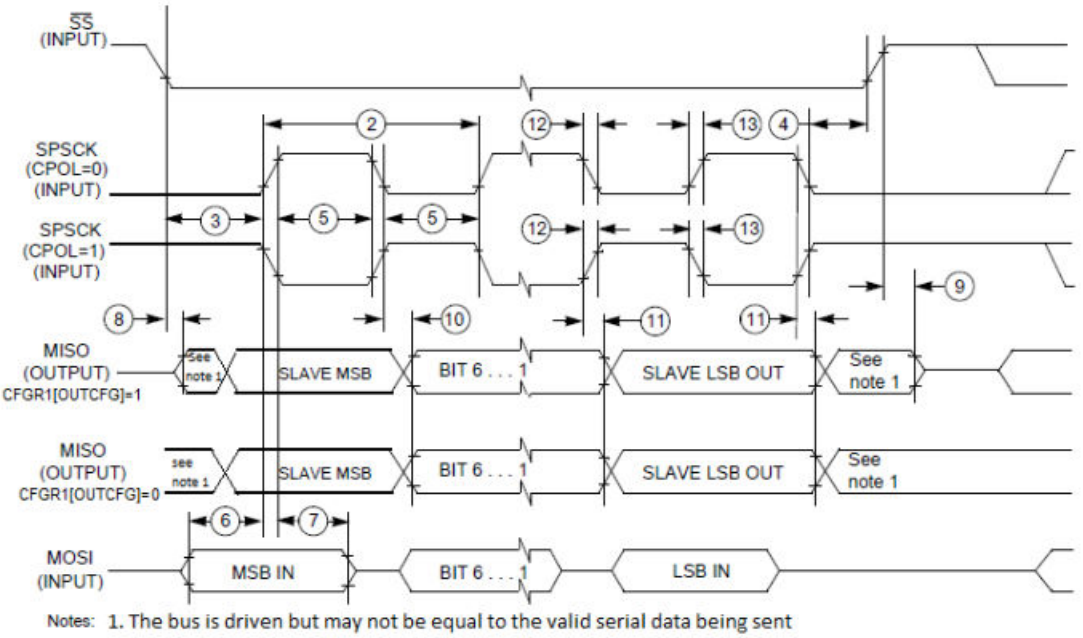

Figure 20. LPSPI slave mode timing (CPHA = 0)

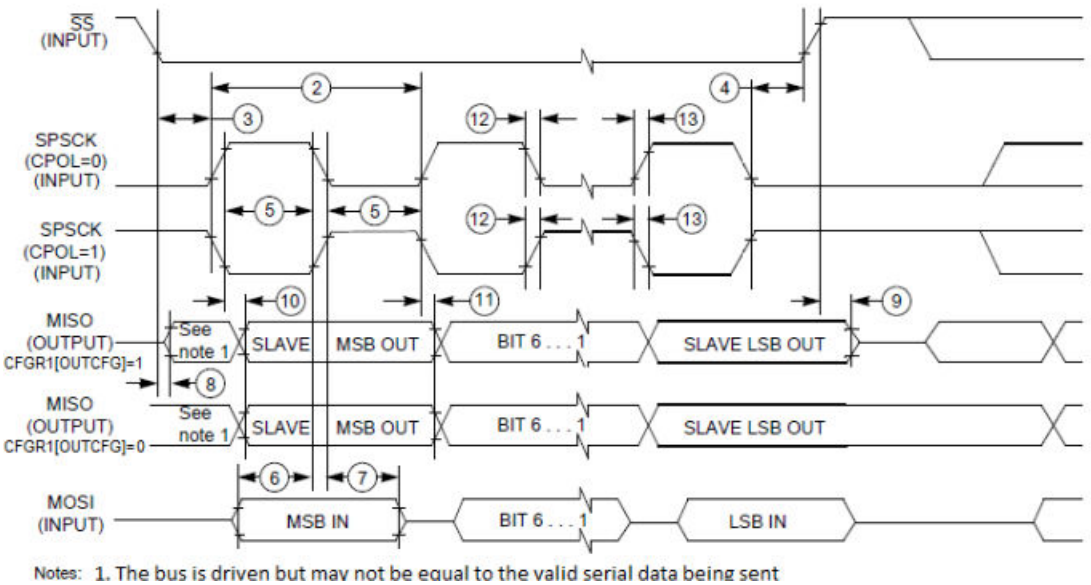

Figure 21. LPSPI slave mode timing (CPHA = 1)

6.5.3 LPI2C electrical specifications

See General AC specifications for LPI2C specifications.

For supported baud rate see section 'Chip-specific LPI2C information' of the *Reference Manual.*

6.5.4 FlexCAN electical specifications

For supported baud rate, see section 'Protocol timing' of the *Reference Manual*.

6.5.5 SAI electrical specifications

The following table describes the SAI electrical characteristics.

- Measurements are with maximum output load of 50 pF, input transition of 1 ns and pad configured with fastest slew settings (DSE = 1'b1).
- I/O operating voltage ranges from 2.97 V to 3.6 V
- While doing the mode transition (RUN -> HSRUN or HSRUN -> RUN), the interface should be OFF.

Table 33. Master mode timing specifications

Symbol	Description	Min.	Max.	Unit
—	Operating voltage	2.97	3.6	V
S1	SAI_MCLK cycle time	40	—	ns
S2	SAI_MCLK pulse width high/low	45%	55%	MCLK period
S3	SAI_BCLK cycle time	80	—	ns
S4	SAI_BCLK pulse width high/low	45%	55%	BCLK period
S5	SAI_RXD input setup before SAI_BCLK	28	—	ns
S6	SAI_RXD input hold after SAI_BCLK	0	—	ns
S7	SAI_BCLK to SAI_TXD output valid	—	8	ns
S8	SAI_BCLK to SAI_TXD output invalid	-2	—	ns
S9	SAI_FS input setup before SAI_BCLK	28	—	ns
S10	SAI_FS input hold after SAI_BCLK	0	—	ns
S11	SAI_BCLK to SAI_FS output valid	—	8	ns
S12	SAI_BCLK to SAI_FS output invalid	-2	—	ns

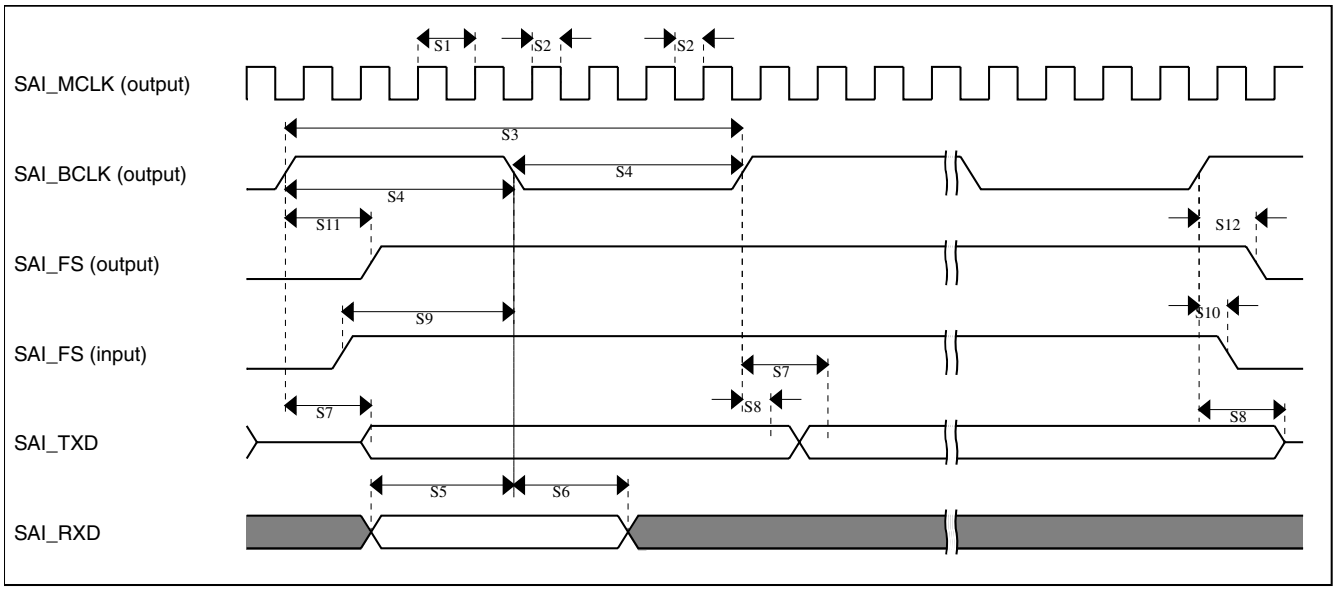

Figure 22. SAI Timing — Master modes

Table 34. Slave mode timing specifications

Symbol	Description	Min.	Max.	Unit
—	Operating voltage	2.97	3.6	V
S13	SAI_BCLK cycle time (input)	80	—	ns
S14[1]	SAI_BCLK pulse width high/low (input)	45%	55%	BCLK period
S15	SAI_RXD input setup before SAI_BCLK	8	—	ns
S16	SAI_RXD input hold after SAI_BCLK	2	—	ns
S17	SAI_BCLK to SAI_TXD output valid	—	28	ns
S18	SAI_BCLK to SAI_TXD output invalid	0	—	ns
S19	SAI_FS input setup before SAI_BCLK	8	—	ns
S20	SAI_FS input hold after SAI_BCLK	2	—	ns
S21	SAI_BCLK to SAI_FS output valid	—	28	ns
S22	SAI_BCLK to SAI_FS output invalid	0	—	ns

1. The slave mode parameters (S15 - S22) assume 50% duty cycle on SAI_BCLK input. Any change in SAI_BCLK duty cycle input must be taken care during the board design or by the master timing.

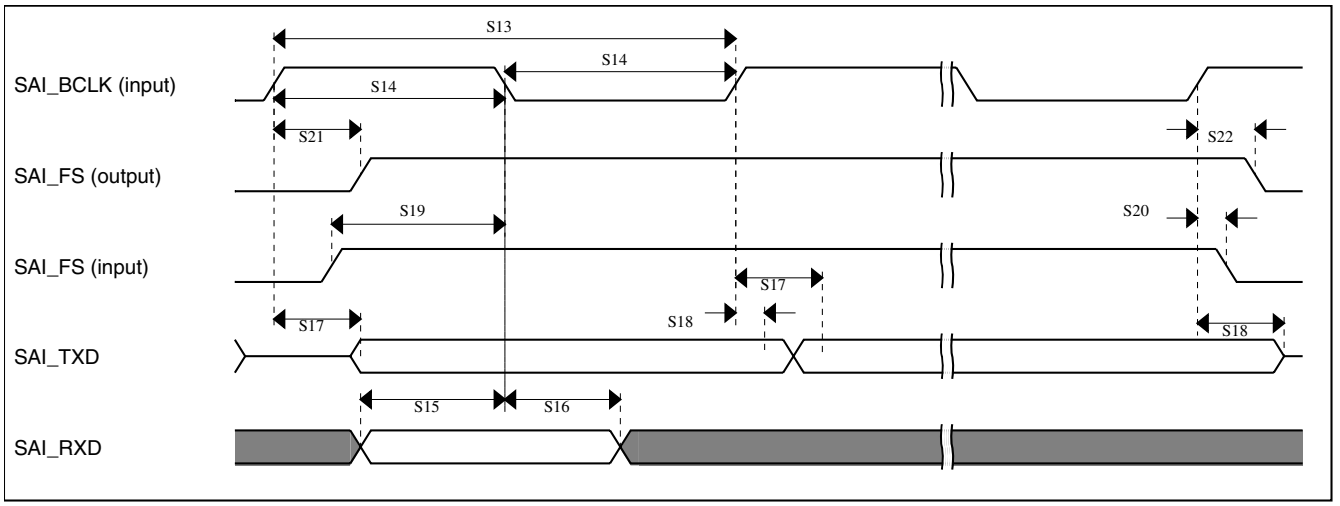

Figure 23. SAI Timing — Slave modes

6.5.6 Ethernet AC specifications

The following timing specs are defined at the chip I/O pin and must be translated appropriately to arrive at timing specs/constraints for the physical interface.

The following table describes the MII electrical characteristics.

- Measurements are with maximum output load of 25 pF, input transition of 1 ns and pad configured with fastest slew settings (DSE = 1'b1).
- I/O operating voltage ranges from 2.97 V to 3.6 V
- While doing the mode transition (RUN -> HSRUN or HSRUN -> RUN), the interface should be OFF.

Table 35. MII signal switching specifications

Symbol	Description	Min.	Max.	Unit
—	RXCLK frequency	—	25	MHz
MII1	RXCLK pulse width high	35%	65%	RXCLK period
MII2	RXCLK pulse width low	35%	65%	RXCLK period
MII3	RXD[3:0], RXDV, RXER to RXCLK setup	5	—	ns
MII4	RXCLK to RXD[3:0], RXDV, RXER hold	5	—	ns
—	TXCLK frequency	—	25	MHz
MII5	TXCLK pulse width high	35%	65%	TXCLK period
MII6	TXCLK pulse width low	35%	65%	TXCLK period
MII7	TXCLK to TXD[3:0], TXEN, TXER invalid	2	—	ns
MII8	TXCLK to TXD[3:0], TXEN, TXER valid	—	25	ns

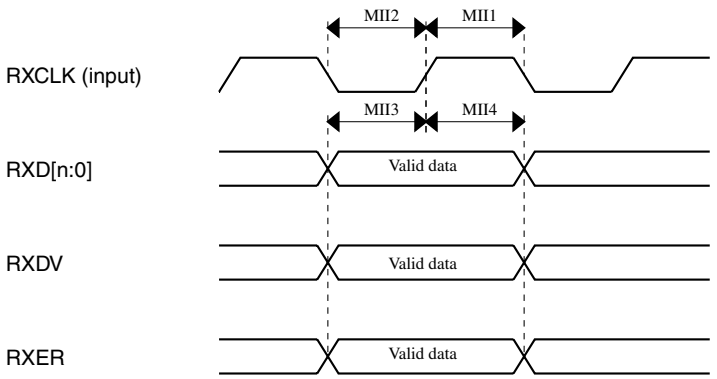

Figure 24. MII receive diagram

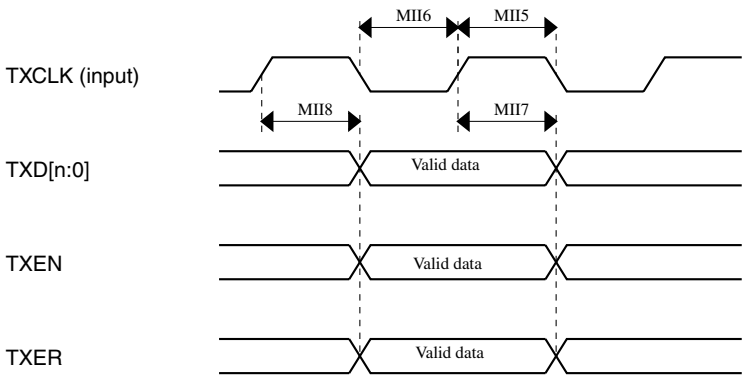

Figure 25. MII transmit signal diagram

The following table describes the RMII electrical characteristics.

- Measurements are with maximum output load of 25 pF, input transition of 1 ns and pad configured with fastest slew settings (DSE = 1'b1).
- I/O operating voltage ranges from 2.97 V to 3.6 V
- While doing the mode transition (RUN -> HSRUN or HSRUN -> RUN), the interface should be OFF.

Table 36. RMII signal switching specifications

Symbol	Description	Min.	Max.	Unit
—	RMII input clock RMII_CLK Frequency	—	50	MHz
RMII1, RMII5	RMII_CLK pulse width high	35%	65%	RMII_CLK period
RMII2, RMII6	RMII_CLK pulse width low	35%	65%	RMII_CLK period
RMII3	RXD[1:0], CRS_DV, RXER to RMII_CLK setup	4	—	ns
RMII4	RMII_CLK to RXD[1:0], CRS_DV, RXER hold	2	—	ns

Table continues on the next page...

Table 36. RMII signal switching specifications (continued)

Symbol	Description	Min.	Max.	Unit
RMII7	RMII_CLK to TXD[1:0], TXEN invalid	2	—	ns
RMII8	RMII_CLK to TXD[1:0], TXEN valid	—	15	ns

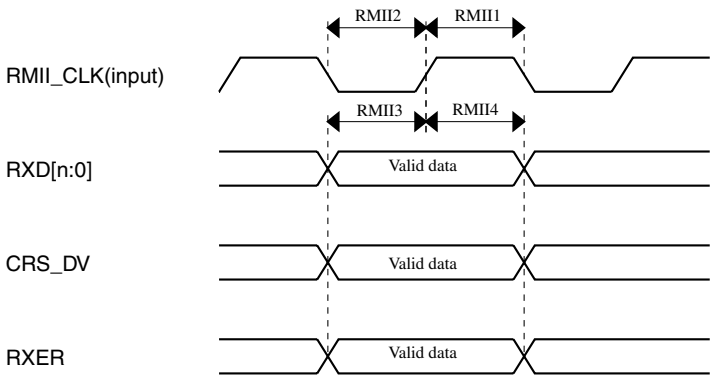

Figure 26. RMII receive diagram

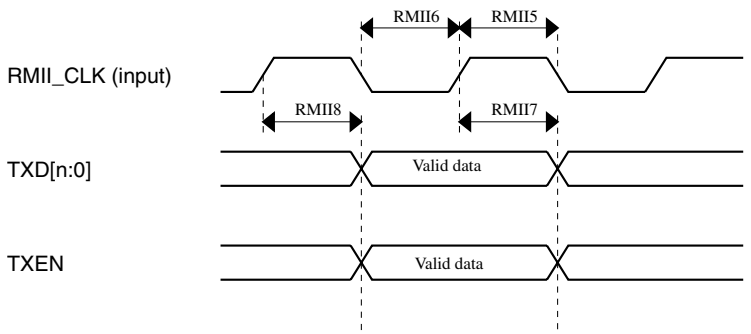

Figure 27. RMII transmit diagram

The following table describes the MDIO electrical characteristics.

- Measurements are with maximum output load of 25 pF, input transition of 1 ns and pad configured with fastest slew settings (DSE = 1'b1).
- I/O operating voltage ranges from 2.97 V to 3.6 V
- While doing the mode transition (RUN -> HSRUN or HSRUN -> RUN), the interface should be OFF.
- MDIO pin must have external Pull-up.

Table 37. MDIO timing specifications

Symbol	Description	Min.	Max.	Unit
—	MDC Clock Frequency	—	2.5	MHz

Table continues on the next page...

Table 37. MDIO timing specifications (continued)

Symbol	Description	Min.	Max.	Unit
MDC1	MDC pulse width high	40%	60%	MDC period
MDC2	MDC pulse width low	40%	60%	MDC period
MDC3	MDIO (input) to MDC rising edge setup	25	—	ns
MDC4	MDIO (input) to MDC rising edge hold	0	—	ns
MDC5	MDC falling edge to MDIO output valid (maximum propagation delay)	—	25	ns
MDC6	MDC falling edge to MDIO output invalid (minimum propagation delay)	-10	—	ns

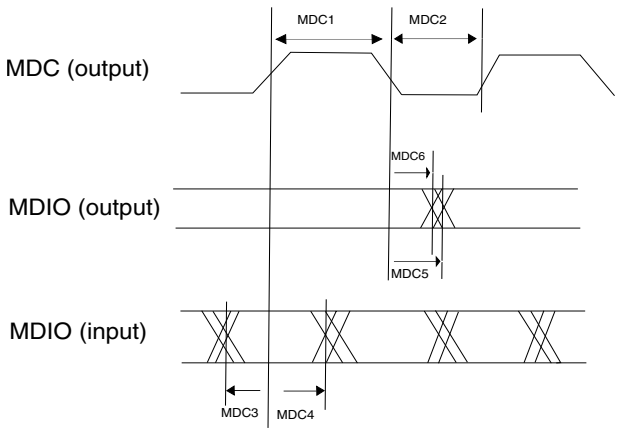

Figure 28. MII/RMII serial management channel timing diagram

6.5.7 Clockout frequency

Maximum supported clock out frequency for this device is 20 MHz

6.6 Debug modules

6.6.1 SWD electrical specofications

Table 38. SWD electrical specifications

Symbol	Description	Run Mode				HSRUN Mode				VLPR Mode				Unit
		5.0 V IO		3.3 V IO		5.0 V IO		3.3 V IO		5.0 V IO		3.3 V IO		
		Min.	Max.	Min.	Max.	Min.	Max.	Min.	Max.	Min.	Max.	Min.	Max.	
S1	SWD_CLK frequency of operation	-	25	-	25	-	25	-	25	-	10	-	10	MHz
S2	SWD_CLK cycle period	1/S1	-	1/S1	-	1/S1	-	1/S1	-	1/S1	-	1/S1	-	ns
S3	SWD_CLK clock pulse width	S2/2 - 5	S2/2 + 5	S2/2 - 5	S2/2 + 5	S2/2 - 5	S2/2 + 5	S2/2 - 5	S2/2 + 5	S2/2 - 5	S2/2 + 5	S2/2 - 5	S2/2 + 5	ns
S4	SWD_CLK rise and fall times	-	1	-	1	-	1	-	1	-	1	-	1	ns
S9	SWD_DIO input data setup time to SWD_CLK rise	4	-	4	-	4	-	4	-	16	-	16	-	ns
S10	SWD_DIO input data hold time after SWD_CLK rise	3	-	3	-	3	-	3	-	10	-	10	-	ns
S11	SWD_CLK high to SWD_DIO data valid	-	28	-	38	-	28	-	38	-	70	-	77	ns
S12	SWD_CLK high to SWD_DIO high-Z	-	28	-	38	-	28	-	38	-	70	-	77	ns
S13	SWD_CLK high to SWD_DIO data invalid	0	-	0	-	0	-	0	-	0	-	0	-	ns

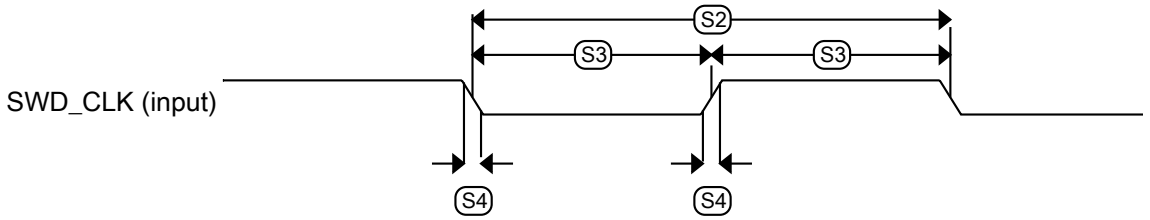

Figure 29. Serial wire clock input timing

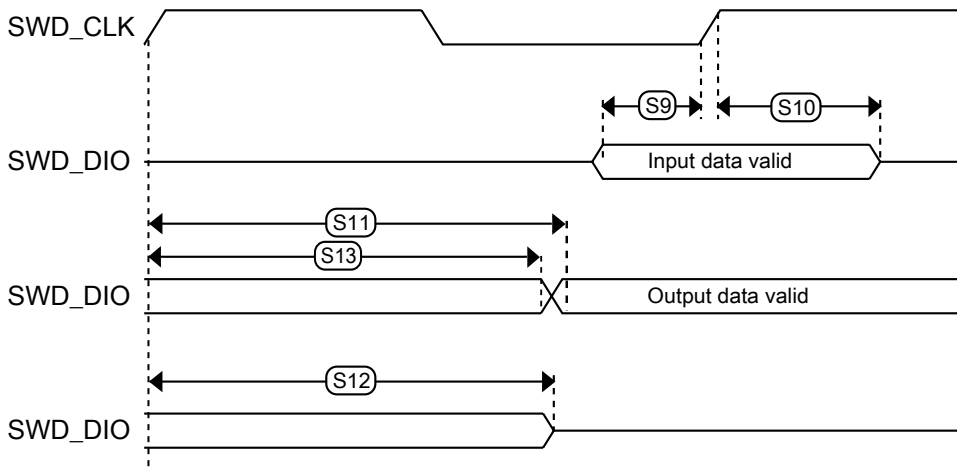

Figure 30. Serial wire data timing

6.6.2 Trace electrical specifications

The following table describes the Trace electrical characteristics.

- Measurements are with maximum output load of 50 pF, input transition of 1 ns and pad configured with fastest slew settings (DSE = 1'b1).
- While doing the mode transition (RUN -> HSRUN or HSRUN -> RUN), the interface should be OFF.

Table 39. Trace specifications

	Symbol	Description	RUN Mode			HSRUN Mode		VLPR Mode	Unit
—	Fsys	System frequency	80	48	40	112	80	4	MHz

Table continues on the next page...

Table 39. Trace specifications (continued)

	Symbol	Description	RUN Mode			HSRUN Mode		VLPR Mode	Unit
Trace on fast pads	f_{TRACE}	Max Trace frequency	80	48	40	74.667	80	4	MHz
	t_{DVO}	Data Output Valid	4	4	4	4	4	20	ns
	t_{DIV}	Data Output Invalid	-2	-2	-2	-2	-2	-10	ns
Trace on slow pads	f_{TRACE}	Max Trace frequency	22.86	24	20	22.4	22.86	4	MHz
	t_{DVO}	Data Output Valid	8	8	8	8	8	20	ns
	t_{DIV}	Data Output Invalid	-4	-4	-4	-4	-4	-10	ns

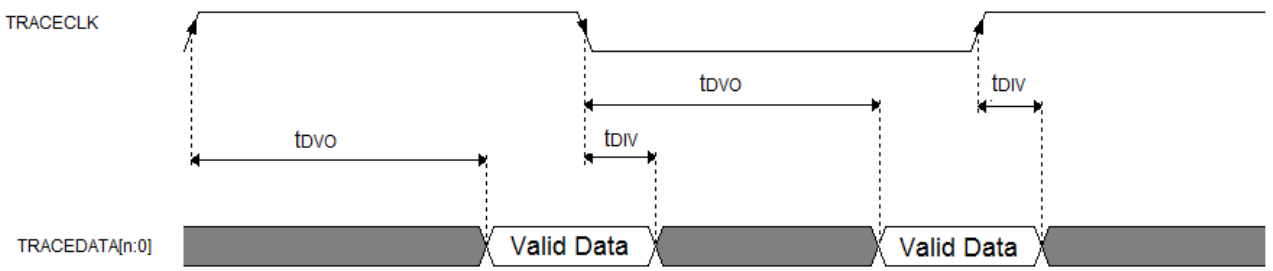

Figure 31. TRACE CLKOUT specifications

6.6.3 JTAG electrical specifications

Table 40. JTAG electrical specifications

Symbol	Description	Run Mode				HSRUN Mode				VLPR Mode				Unit
		5.0 V IO		3.3 V IO		5.0 V IO		3.3 V IO		5.0 V IO		3.3 V IO		
		Min.	Max.	Min.	Max.	Min.	Max.	Min.	Max.	Min.	Max.	Min.	Max.	
JI	TCLK frequency of operation													MHz
	Boundary Scan	-	20	-	20	-	20	-	20	-	10	-	10	
	JTAG	-	20	-	20	-	20	-	20	-	10	-	10	
J2	TCLK cycle period	1/JI	-	1/JI	-	1/JI	-	1/JI	-	1/JI	-	1/JI	-	ns
J3	TCLK clock pulse width													ns
	Boundary Scan	J2/2 - 5	J2/2 + 5	J2/2 - 5	J2/2 + 5	J2/2 - 5	J2/2 + 5	J2/2 - 5	J2/2 + 5	J2/2 - 5	J2/2 + 5	J2/2 - 5	J2/2 + 5	
	JTAG													
J4	TCLK rise and fall times	-	1	-	1	-	1	-	1	-	1	-	1	ns
J5	Boundary scan input data setup time to TCLK rise	5	-	5	-	5	-	5	-	15	-	15	-	ns
J6	Boundary scan input data hold time after TCLK rise	5	-	5	-	5	-	5	-	8	-	8	-	ns
J7	TCLK low to boundary scan output data valid	-	28	-	32	-	28	-	32	-	80	-	80	ns
J8	TCLK low to boundary scan output data invalid	0	-	0	-	0	-	0	-	0	-	0	-	
J9	TCLK low to boundary scan output high-Z	-	28	-	32	-	28	-	32	-	80	-	80	ns
J10	TMS, TDI input data setup time to TCLK rise	3	-	3	-	3	-	3	-	15	-	15	-	ns
J11	TMS, TDI input data hold time after TCLK rise	2	-	2	-	2	-	2	-	8	-	8	-	ns
J12	TCLK low to TDO data valid	-	28	-	32	-	28	-	32	-	80	-	80	ns
J13	TCLK low to TDO data invalid	0	-	0	-	0	-	0	-	0	-	0	-	ns
J14	TCLK low to TDO high-Z	-	28	-	32	-	28	-	32	-	80	-	80	ns

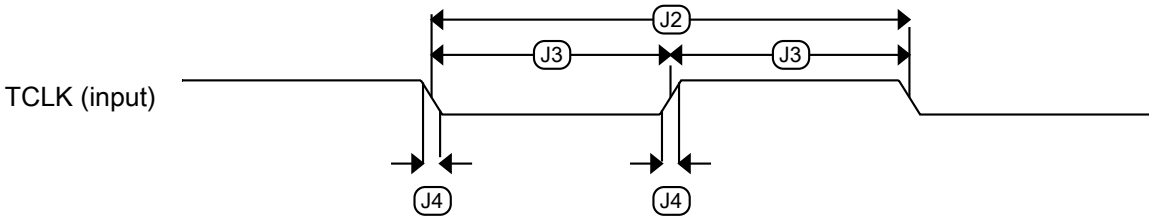

Figure 32. Test clock input timing

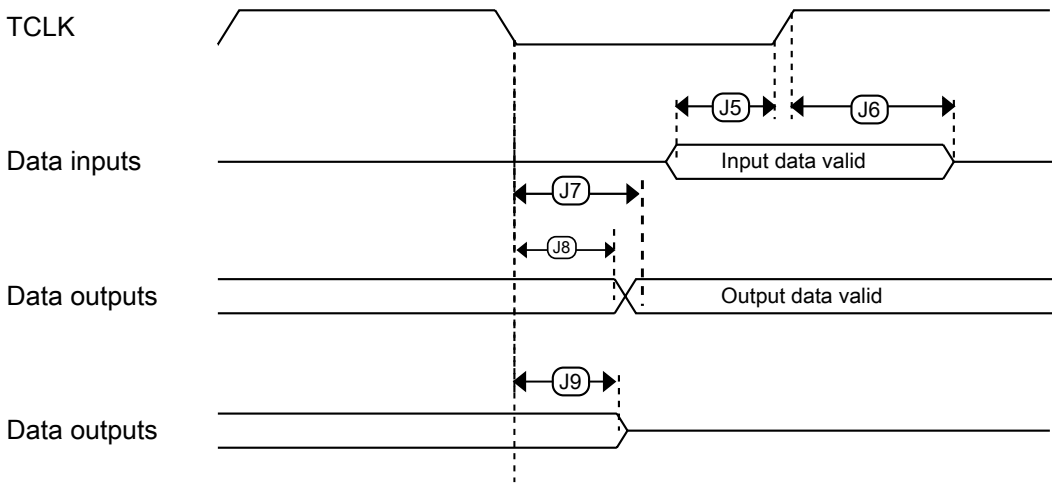

Figure 33. Boundary scan (JTAG) timing

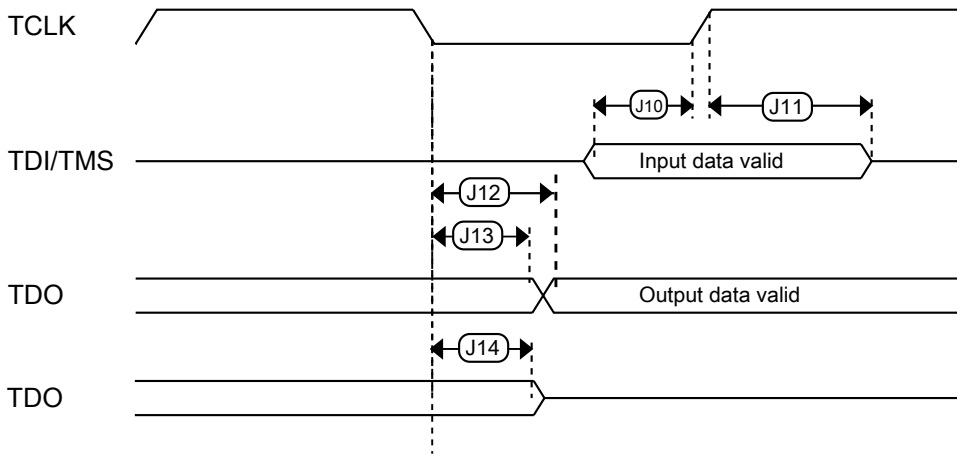

Figure 34. Test Access Port timing

7 Thermal attributes

7.1 Description

The tables in the following sections describe the thermal characteristics of the device.

NOTE

Junction temperature is a function of die size, on-chip power dissipation, package thermal resistance, mounting side (board) temperature, ambient temperature, air flow, power dissipation or other components on the board, and board thermal resistance.

7.2 Thermal characteristics

Table 41. Thermal characteristics for 32-pin QFN and 48/64/100/144/176-pin LQFP package

Rating	Conditions	Symbol	Package	Values						Unit
				S32K116	S32K118	S32K142	S32K144	S32K146	S32K148	
Thermal resistance, Junction to Ambient (Natural Convection)[1, 2]	Single layer board (1s)	$R_{\theta JA}$	32	93	NA	NA	NA	NA	NA	°C/W
			48	79	71	70	69	NA	NA	
			64	NA	62	61	61	59	NA	
			100	NA	NA	53	52	51	46	
			144	NA	NA	NA	NA	51	44	
			176	NA	NA	NA	NA	NA	42	
Thermal resistance, Junction to Ambient (Natural Convection)[1]	Two layer board (1s1p)	$R_{\theta JA}$	32	50	NA	NA	NA	NA	NA	
			48	58	50	49	48	NA	NA	
			64	NA	46	45	45	44	NA	
			100	NA	NA	42	42	40	36	
			144	NA	NA	NA	NA	44	37	
			176	NA	NA	NA	NA	NA	36	
Thermal resistance, Junction to Ambient (Natural Convection)[1, 2]	Four layer board (2s2p)	$R_{\theta JA}$	32	32	NA	NA	NA	NA	NA	
			48	55	47	46	45	NA	NA	
			64	NA	44	43	43	41	NA	
			100	NA	NA	40	40	39	34	
			144	NA	NA	NA	NA	42	36	
			176	NA	NA	NA	NA	NA	35	
Thermal resistance, Junction to Ambient (@200 ft/min)[1, 3]	Single layer board (1s)	$R_{\theta JMA}$	32	77	NA	NA	NA	NA	NA	
			48	66	58	57	57	NA	NA	
			64	NA	50	49	49	48	NA	
			100	NA	NA	43	42	41	37	
			144	NA	NA	NA	NA	42	36	
			176	NA	NA	NA	NA	NA	34	
Thermal resistance, Junction to Ambient (@200 ft/min)[1]	Two layer board (1s1p)	$R_{\theta JMA}$	32	43	NA	NA	NA	NA	NA	
			48	51	43	42	41	NA	NA	
			64	NA	39	38	38	37	NA	
			100	NA	NA	35	35	34	30	

Table continues on the next page...

Table 41. Thermal characteristics for 32-pin QFN and 48/64/100/144/176-pin LQFP package (continued)

Rating	Conditions	Symbol	Package	Values						Unit
				S32K116	S32K118	S32K142	S32K144	S32K146	S32K148	
			144	NA	NA	NA	NA	37	31	
			176	NA	NA	NA	NA	NA	30	
Thermal resistance, Junction to Ambient (@200 ft/min)[1, 3]	Four layer board (2s2p)	$R_{\theta JMA}$	32	26	NA	NA	NA	NA	NA	
			48	48	41	40	39	NA	NA	
			64	NA	37	36	36	35	NA	
			100	NA	NA	34	34	33	28	
			144	NA	NA	NA	NA	36	30	
			176	NA	NA	NA	NA	NA	29	
Thermal resistance, Junction to Board[4]	—	$R_{\theta JB}$	32	11	NA	NA	NA	NA	NA	
			48	33	24	23	23	NA	NA	
			64	NA	26	25	25	23	NA	
			100	NA	NA	25	25	24	19	
			144	NA	NA	NA	NA	30	24	
			176	NA	NA	NA	NA	NA	24	
Thermal resistance, Junction to Case [5]	—	$R_{\theta JC}$	32	NA	NA	NA	NA	NA	NA	
			48	23	19	17	17	NA	NA	
			64	NA	14	13	12	11	NA	
			100	NA	NA	13	12	11	9	
			144	NA	NA	NA	NA	12	9	
			176	NA	NA	NA	NA	NA	9	
Thermal resistance, Junction to Case (Bottom) [6]	—	$R_{\theta JCBottom}$	32	1	NA					
			48	NA						
			64							
			100							
			144							
			176							

Table continues on the next page...

Table 41. Thermal characteristics for 32-pin QFN and 48/64/100/144/176-pin LQFP package (continued)

Rating	Conditions	Symbol	Package	Values						Unit
				S32K116	S32K118	S32K142	S32K144	S32K146	S32K148	
Thermal resistance, Junction to Package Top[7]	Natural Convection	ψ_{JT}	32	1	NA	NA	NA	NA	NA	
			48	4	2	2	2	NA	NA	
			64	NA	2	2	2	2	NA	
			100	NA	NA	2	2	2	1	
			144	NA	NA	NA	NA	2	1	
			176	NA	NA	NA	NA	NA	1	

1. Junction temperature is a function of die size, on-chip power dissipation, package thermal resistance, mounting site (board) temperature, ambient temperature, air flow, power dissipation of other components on the board, and board thermal resistance.
2. Per JEDEC JESD51-2 with natural convection for horizontally oriented board. Board meets JESD51-9 specification for 1s or 2s2p board, respectively.
3. Per JEDEC JESD51-6 with forced convection for horizontally oriented board. Board meets JESD51-9 specification for 1s or 2s2p board, respectively.
4. Thermal resistance between the die and the printed circuit board per JEDEC JESD51-8. Board temperature is measured on the top surface of the board near the package.
5. Thermal resistance between the die and the case top surface as measured by the cold plate method (MIL SPEC-883 Method 1012.1).
6. Thermal resistance between the die and the solder pad on the bottom of the package. Interface resistance is ignored.
7. Thermal characterization parameter indicating the temperature difference between package top and the junction temperature per JEDEC JESD51-2. When Greek letters are not available, the thermal characterization parameter is written as Psi-JT.

Table 42. Thermal characteristics for the 100 MAPBGA package

Rating	Conditions	Symbol	Values			Unit
			S32K146	S32K144	S32K148	
Thermal resistance, Junction to Ambient (Natural Convection) [1, 2]	Single layer board (1s)	$R_{\theta JA}$	57.2	61.0	52.5	°C/W
Thermal resistance, Junction to Ambient (Natural Convection) [1, 2, 3]	Four layer board (2s2p)	$R_{\theta JA}$	32.1	35.6	27.5	°C/W
Thermal resistance, Junction to Ambient (@200 ft/min) [1, 2, 3]	Single layer board (1s)	$R_{\theta JMA}$	44.1	46.6	39.0	°C/W
Thermal resistance, Junction to Ambient (@200 ft/min)[1, 3]	Two layer board (2s2p)	$R_{\theta JMA}$	27.2	30.9	22.8	°C/W
Thermal resistance, Junction to Board[4]	—	$R_{\theta JB}$	15.3	18.9	11.2	°C/W
Thermal resistance, Junction to Case [5]	—	$R_{\theta JC}$	10.2	14.2	7.5	°C/W
Thermal resistance, Junction to Package Top outside center[6]	—	ψ_{JT}	0.2	0.4	0.2	°C/W
Thermal resistance, Junction to Package Bottom outside center[7]	—	ψ_{JB}	12.2	15.9	18.3	°C/W

1. Junction temperature is a function of die size, on-chip power dissipation, package thermal resistance, mounting site (board) temperature, ambient temperature, air flow, power dissipation of other components on the board, and board thermal resistance.
2. Per SEMI G38-87 and JEDEC JESD51-2 with the single layer board horizontal.
3. Per JEDEC JESD51-6 with the board horizontal.
4. Thermal resistance between the die and the printed circuit board per JEDEC JESD51-8. Board temperature is measured on the top surface of the board near the package.
5. Thermal resistance between the die and the case top surface as measured by the cold plate method (MIL SPEC-883 Method 1012.1).
6. Thermal characterization parameter indicating the temperature difference between package top and the junction temperature per JEDEC JESD51-2. When Greek letters are not available, the thermal characterization parameter is written as Psi-JT.
7. Thermal characterization parameter indicating the temperature difference between package bottom center and the junction temperature per JEDEC JESD51-12. When Greek letters are not available, the thermal characterization parameter is written as Psi-JB.

7.3 General notes for specifications at maximum junction temperature

An estimation of the chip junction temperature, T_J, can be obtained from this equation:

$$T_J = T_A + (R_{\theta JA} \times P_D)$$

where:

- T_A = ambient temperature for the package (°C)
- $R_{\theta JA}$ = junction to ambient thermal resistance (°C/W)
- P_D = power dissipation in the package (W)

The junction to ambient thermal resistance is an industry standard value that provides a quick and easy estimation of thermal performance. Unfortunately, there are two values in common usage: the value determined on a single layer board and the value obtained on a board with two planes. For packages such as the PBGA, these values can be different by a factor of two. Which value is closer to the application depends on the power dissipated by other components on the board. The value obtained on a single layer board is appropriate for the tightly packed printed circuit board. The value obtained on the board with the internal planes is usually appropriate if the board has low power dissipation and the components are well separated.

When a heat sink is used, the thermal resistance is expressed in the following equation as the sum of a junction-to-case thermal resistance and a case-to-ambient thermal resistance:

$$R_{\theta JA} = R_{\theta JC} + R_{\theta CA}$$

where:

- $R_{\theta JA}$ = junction to ambient thermal resistance (°C/W)
- $R_{\theta JC}$ = junction to case thermal resistance (°C/W)
- $R_{\theta CA}$ = case to ambient thermal resistance (°C/W)

$R_{\theta JC}$ is device related and cannot be influenced by the user. The user controls the thermal environment to change the case to ambient thermal resistance, $R_{\theta CA}$. For instance, the user can change the size of the heat sink, the air flow around the device, the interface material, the mounting arrangement on printed circuit board, or change the thermal dissipation on the printed circuit board surrounding the device.

To determine the junction temperature of the device in the application when heat sinks are not used, the Thermal Characterization Parameter (Ψ_{JT}) can be used to determine the junction temperature with a measurement of the temperature at the top center of the package case using this equation:

$$T_J = T_T + (\Psi_{JT} \times P_D)$$

where:

- T_T = thermocouple temperature on top of the package (°C)
- Ψ_{JT} = thermal characterization parameter (°C/W)
- P_D = power dissipation in the package (W)

The thermal characterization parameter is measured per JESD51-2 specification using a 40 gauge type T thermocouple epoxied to the top center of the package case. The thermocouple should be positioned so that the thermocouple junction rests on the package. A small amount of epoxy is placed over the thermocouple junction and over about 1 mm of wire extending from the junction. The thermocouple wire is placed flat against the package case to avoid measurement errors caused by cooling effects of the thermocouple wire.

8 Dimensions

8.1 Obtaining package dimensions

Package dimensions are provided in the package drawings.

To find a package drawing, go to http://www.nxp.com and perform a keyword search for the drawing's document number:

Package option	Document Number
32-pin QFN	SOT617-3 [1]
48-pin LQFP	98ASH00962A
64-pin LQFP	98ASS23234W
100-pin LQFP	98ASS23308W
100-pin MAPBGA	98ASA00802D
144-pin LQFP	98ASS23177W
176-pin LQFP	98ASS23479W

1. 5x5 mm package

9 Pinouts

9.1 Package pinouts and signal descriptions

For package pinouts and signal descriptions, refer to the Reference Manual.

10 Revision History

The following table provides a revision history for this document.

Table 43. Revision History

Rev. No.	Date	Substantial Changes
1	12 Aug 2016	Initial release

2	03 March 2017	• Updated descpition of QSPI and Clock interfaces in Key Features section
		• Updated figure: High-level architecture diagram for the S32K1xx family
		• Updated figure: S32K1xx product series comparison
		• Added note in section Selecting orderable part number
		• Updated figure: Ordering information
		• In table: Absolute maximum ratings :
		  • Added footnote to I_{INJPAD_DC}
		  • Updated min and max value of I_{INJPAD_DC}
		  • Updated description, max and min values for I_{INJSUM}
		  • Updated $V_{IN_TRANSIENT}$
		• In table: Voltage and current operating requirements :
		  • Renamed V_{SUP_OFF}
		  • Updated max value of V_{DD_OFF}
		  • Removed V_{INA} and V_{IN}
		  • Added V_{REFH} and V_{REFL}
		  • Updated footnote "Typical conditions assumes V_{DD} = V_{DDA} = V_{REFH} = 5 V ...
		  • Removed I_{NJSUM_AF}
		• Updated footnotes in table Table 4
		• Updated section Power mode transition operating behaviors
		• In table: Power consumption
		  • Added footnote "With PMC_REGSC[CLKBIASDIS] ... "
		  • Updated conditions for VLPR
		  • Removed Idd/MHz for S32K144
		  • Updated numbers for S32K142 and S32K148
		  • Removed use case footnotes
		• In section Modes configuration :
		  • Replaced table "Modes configuration" with spreadsheet attachment: 'S32K1xx_Power_Modes _Master_configuration_sheet'
		• In table: DC electrical specifications at 3.3 V Range :
		  • Added footnotes to V_{ih} Input Buffer High Voltage and V_{ih} Input Buffer Low Voltage
		  • Added footnote to High drive port pins
		• In table: DC electrical specifications at 5.0 V Range :

Table continues on the next page...

Table 43. Revision History

Rev. No.	Date	Substantial Changes

		• Added footnotes V_{ih} Input Buffer High Voltage and V_{ih} Input Buffer Low Voltage
		• Updated table: AC electrical specifications at 3.3 V range
		• Updated table: AC electrical specifications at 5 V range
		• In table: Standard input pin capacitance
		  • Added footnote to Normal run mode (S32K14x series)
		• Removed note from 1M ohms Feedback Resistor in figure Oscillator connections scheme
		• In table: External System Oscillator electrical specifications
		  • Updated typical of I_{DDOSC} Supply current — low-gain mode (low-power mode) (HGO=0) 1 for 4 and 8 MHz
		  • Removed rows for I_{lk_ext} EXTAL/XTAL impedence High-frequency, low-gain mode (low-power mode) and high-frequency, high-gain mode and V_{EXTAL}
		  • Updated Typ. of R_S low-gain mode
		  • Updated description of R_F, R_S, and V_{PP}
		  • Removed footnote from R_F Feedback resistor
		  • Updated footnote for C_1 C_2 and R_F
		• In table: Table 18
		  • Removed mention of high-frequency
		  • Added HGO 0, 1 information
		• In table: Fast internal RC Oscillator electrical specifications
		  • Updated F_{FIRC}
		  • Updated description of ΔF
		  • Updated typ and max values of T_{JIT} cycle-to-cycle jitter and T_{JIT} Long term jitter over 1000 cycles
		  • Added footnotes to T_{JIT} cycle-to-cycle jitter and T_{JIT} Long term jitter over 1000 cycles
		  • Updated naming convention of I_{DDFIRC} Supply current
		  • Added footnote to I_{DDFIRC} Supply current
		  • Added footnote to column Parameter
		• In table: Slow internal RC oscillator (SIRC) electrical specifications
		  • Removed V_{DD} Supply current in 2 MHz Mode
		  • Removed footnote and updated description of ΔF
		  • Updated footnote to F_{SIRC} and I_{DDSIRC}
		• In table: SPLL electrical specifications
		  • Added row for F_{SPLL_REF} PLL Reference
		  • Updated naming convention throughout the table
		  • Updated the max value of T_{SPLL_LOCK} Lock detector detection time
		• In table: Flash timing specifications — commands
		  • Added footnotes:
		  • All command times assumes ...
		  • For all EEPROM Emulation terms ...
		  • 'First time' EERAM writes after a POR ...
		  • Removed footnote 'Assumes 25 MHz or ...'
		  • Updated Max of $t_{eewr32bers}$
		  • Added parameters $t_{quickwr}$ and $t_{quickwrClnup}$
		• In table: Reliability specifications
		  • Removed Typ. values for all parameters
		  • Removed footnote 'Typical values represent ... '
		  • Added footnote 'Any other EEE driver usage ... '
		• Updated QuadSPI AC specifications
		• Removed topic: Reliability, Safety and Security modules
		• In table: 12-bit ADC operating conditions
		  • Updated V_{DDA}

Table continues on the next page...

Table 43. Revision History (continued)

Rev. No.	Date	Substantial Changes
		• Updated values for V_{REFH} and V_{REFL} to add refernce to the section "voltage and current operating requirments" for Min and Max valaues • Updated footnote to Typ. • Removed footnote from RAS Analog source resistance • Updated figure: ADC input impedance equivalency diagram • In table: 12-bit ADC characteristics (2.7 V to 3 V) (V_{REFH} = V_{DDA}, V_{REFL} = V_{SS}) • Removed rows for V_{TEMP_S} and V_{TEMP25} • Updated footnote to Typ. • In table: 12-bit ADC characteristics (3 V to 5.5 V)(V_{REFH} = V_{DDA}, V_{REFL} = V_{SS}) • Removed rows for V_{TEMP_S} and V_{TEMP25} • Removed number for TUE • Updated footnote to Typ. • In table: Comparator with 8-bit DAC electrical specifications • Updated Typ. of I_{DDLS} Supply current, Low-speed mode • Updated Typ. of t_{DLSB} Propagation delay, Low-speed mode • Updated Typ. of t_{DHSS} Propagation delay, High-speed mode • Updated t_{DLSS} Propagation delay • Added row for t_{DDAC} Initialization and switching settling time • Updated footnote • Updated section LPSPI electrical specifications • Added section: SAI electrical specifications • Updated section: Ethernet AC specifications • Added section: Clockout frequency • Added section: Trace electrical specifications • Updated table: Table 41 : Updated numbers for S32K142 and S32K148 • Updated table: Table 42 : Updated numbers for S32K148 • Updated Document number for 32-pin QFN in topic Obtaining package dimensions
3	14 March 2017	• In Table 2 • Updated min. value of V_{DD_OFF} • Added parameter I_{INJSUM_AF} • Updated Power mode transition operating behaviors • Updated Power consumption • Updated footnote to T_{SPLL_LOCK} in SPLL electrical specifications • In 12-bit ADC electrical characteristics • Updated table: 12-bit ADC characteristics (2.7 V to 3 V) (VREFH = VDDA, VREFL = VSS) • Added typ. value to I_{DDA_ADC}, TUE, DNL, and INL • Added min. value to SMPLTS • Removed footnote 'All the parameters in this table ... ' • Updated table: 12-bit ADC characteristics (3 V to 5.5 V) (VREFH = VDDA, VREFL = VSS) • Added typ. value to I_{DDA_ADC} • Removed footnote 'All the parameters in this table ... ' • In Flash timing specifications — commands updated Max. value of t_{vfykey} to 33 µs
4	02 June 2017	• In section: Block diagram, added block diagram for S32K11x series. • Updated figure: S32K1xx product series comparison. • In section: Selecting orderable part number , added reference to attachement *S32K_Part_Numbers.xlsx*. • In section: Ordering information • Updated figure: Ordering information. • In Table 1,

Table continues on the next page...

Table 43. Revision History (continued)

Rev. No.	Date	Substantial Changes
		• Updated note 'All the limits defined ... ' • Updated parameter '$I_{INJPAD_DC_ABS}$', 'V_{IN_DC}', $I_{INJSUM_DC_ABS}$. • In Table 2, • Updated parameter $I_{INJPAD_DC_OP}$ and $I_{INJSUM_DC_OP}$. • In Table 5, updated TBDs for V_{LVR_HYST}, V_{LVD_HYST}, and $_{VLVW_HYST}$ • In Power mode transition operating behaviors, • Added VLPR → VLPS • Added VLPS → VLPR • Updated TBDs for VLPS → Asynchronous DMA Wakeup, STOP1 → Asynchronous DMA Wakeup, and STOP2 → Asynchronous DMA Wakeup • In Table 7, updated the specifications for S32K144. • Updated the attachment *S32K1xx_Power_Modes _Configuration.xlsx*. • In Table 15, removed C_{IN_A}. • In Table 17, • Updated specificatins for g_{mXOSC}. • Removed I_{DDOSC} • In Table 19, • Added parameter ΔF125. • Removed I_{DDFIRC} • In Table 20, • Added parameter ΔF125. • Removed I_{DDSIRC} • In Table 21, removed I_{LPO} • Updated section: Flash memory module (FTFC) electrical specifications • In section: 12-bit ADC operating conditions, • Updated TBDs for I_{DDA_ADC} and TUE in Table 28 • Updated TBDs for I_{DDA_ADC} and TUE in Table 29 • In section: QuadSPI AC specifications, updated figure 'QuadSPI output timing (HyperRAM mode) diagram'. • In section: 12-bit ADC operating conditions, updated Table 27. • In section: CMP with 8-bit DAC electrical specifications, added note 'For comparator IN signals adjacent ... ' • In table: Table 32, minor update in footnote 6. • In table: Table 41, updated specifications for S32K146.
5	06 Dec 2017	• Removed S32K148 from 'Caution' • Updated figure: S32K1xx product series comparison for • 'EEPROM emulated by FlexRAM' of S32K148 (Added content to footnote) • Added support for LIN protocol version 2.2 A • In Absolute maximum ratings : • Added note 'Unless otherwise ... ' • Added parameter 'Added note 'T_{ramp_MCU}' • Updated footnote for 'T_{ramp}' • In Voltage and current operating requirements : • Added footnote 'V_{DD} and V_{DDA} must be shorted ... ' against parameter 'V_{DD}– V_{DDA}' • Updated footnote 'V_{DD} and V_{DDA} must be shorted ...' • In Power and ground pins • Added diagrams for 32-QFN and 48-LQFP and footnote below the diagrams. • Updated footnote 'V_{DD} and V_{DDA} must be shorted ...' • In Power mode transition operating behaviors :

Table continues on the next page...

Table 43. Revision History

Rev. No.	Date	Substantial Changes
		• Added footnote 'For S32K11x – FIRC/SOSC/FIRC/LPO; For S32K14x – FIRC/SOSC/FIRC/LPO/SPLL' to 'VLPS Mode: All clock sources disabled' • Updated numbers for: • VLPR → VLPS • VLPS → VLPR • 'RUN → Compute operation' • RUN → VLPS • RUN → VLPR • In Power consumption : • Updated specs for S32K142, S32K144, and S32K148 • Updated footnote 'Typical current numbers are indicative ...' • Updated footnote 'The S32K148 data ...' • Removed footnote 'Above S32K148 data is preliminary targets only' • Added new table 'Power consumption at 3.3 V' • In General AC specifications : • Updated max value and footnote of WFRST • Updated symbol for not filtered pulse to 'WNFRST', updated min value, removed max. value, and added footnote • Fixed naming conventions to align with DS in DC electrical specifications at 3.3 V Range and DC electrical specifications at 5.0 V Range • Updated specs for AC electrical specifications at 3.3 V range and AC electrical specifications at 5 V range • In Device clock specifications : • Updated f_{BUS} to 48 for 11x • Added footnote to f_{BUS} for 14x • In External System Oscillator frequency specifications : • Added specs for S32K11x • Updated 't_{dc_extal}' for S32K14x • Added footnote 'Frequecies below ... ' to 'f_{ec_extal}' and 't_{dc_extal}' • Splitted Flash timing specifications — commands for S32K14x and S32K11x • Updated Flash timing specifications — commands for S32K14x • In Reliability specifications : • Added footnote 'Data retention period ... ' for 'tnvmretp1k' and 'tnvmretee' • Minor update in footnote for 'nnvmwree16' 'nnvmwree256' • In QuadSPI AC specifications : • Updated 'MCR[SCLKCFG[5]]' value to 0 • Updated 'Data Input Setup Time' HSRUN Internal DQS PAD Loopback value to 1.6 • Updated 'Data Input Setup Time' DDR External DQS min. value to 2 • Updated 'Data Input Hold Time' DDR External DQS min. value to 20 • Upadted figure 'QuadSPI output timing (SDR mode) diagram' and 'QuadSPI input timing (HyperRAM mode) diagram' • In 12-bit ADC electrical characteristics : • Added note 'On reduced pin packages where ... ' • Removed max. value of 'I_{DDA_ADC}' • Added note 'Due to triple ... ' • In 12-bit ADC operating conditions, removed parameter 'ΔV_{DDA}' • In CMP with 8-bit DAC electrical specifications : • Updated Typ. and Max. values of 'I_{DDLS}' • Upadted Typ. value of 't_{DHSB}' • Updated Typ. value of 'V_{HYST1}' , 'V_{HYST2}', and 'V_{HYST3}' • In LPSPI electrical specifications : • Updated 'f_{periph}' and 'f_{op}', and 't_{SPSCK}'

Table continues on the next page...

Table 43. Revision History (continued)

Rev. No.	Date	Substantial Changes
		• Updated 3.3 V numbers and added footnote against f_{op}, t_{SU}, ans t_V in HSRUN Mode • Added footnote to 't_{WSPSCK}' • Updated Thermal characteristics for S32K11x

6	31 Jan 2018	• Changed the representation of ARM trademark throughout.
		• Removed S32K142 from 'Caution'
		• In 'Key features', added the following note under 'Power management', 'Memory and memory interfaces', and 'Reliability, safety and security':
		  • No write or erase access to ...
		• In High-level architecture diagram for the S32K14x family, added the following footnote:
		  • No write or erase access to ...
		• In High-level architecture diagram for the S32K11x family :
		  • Minor editorial update: Fixed the placement of SRAM, under 'Flash memory controller' block
		• Updated figure: S32K1xx product series comparison :
		  • Updated footnote 1, and added against 'HSRUN' in addition to 'HW security module (CSEc)' and 'EEPROM emulated by FlexRAM'.
		  • Updated 'System RAM (including FlexRAM and MTB)' row for S32K144, S32K146, and S32K148.
		  • Updated channel count for S32K116 in row '12-bit SAR ADC (1 MSPS each)'.
		• Updated Ordering information
		• Updated Flash timing specifications — commands for S32K148, S32K142, S32K146, S32K116, and S32K118.

7	19 April 2018	• Changed Caution to Notes
		  • Updated the wordings of Notes and removed S32K146
		  • Added 'Following two are the available ...'
		• In 'Key features' :
		  • Editorial updates
		  • Updated the note under Power management, Memory and memory interfaces, and Safety and security.
		  • Updated FlexIO under Communications interfaces
		  • Added ENET and SAI under Communications interfaces
		  • Updated Cryptographic Services Engine (CSEc) under 'Safety and security'
		• In High-level architecture diagram for the S32K14x family :
		  • Minor editorial updates
		  • Updated note 3
		• In High-level architecture diagram for the S32K11x family :
		  • Minor editorial updates
		• In figure: S32K1xx product series comparison :
		  • Editorial updates
		  • Updated Frequency for S32K14x
		  • Updated footnote 4
		  • Added footnote 5
		• In Ordering information :
		  • Renamed section, updated the starting paragraph
		  • Updated the figure
		• In Voltage and current operating requirements, updated the note
		• In Power consumption :
		  • Updated specs for S32K146
		  • Removed section 'Modes configuration', amd moved its content under the fisrt paragraph.
		• In 12-bit ADC operating conditions :

Table continues on the next page...

Table 43. Revision History (continued)

Rev. No.	Date	Substantial Changes
		• Fixed the typo in R_{SW1} • In LPSPI electrical specifications : • Updated t_{Lead} and t_{Lag} • Added footnote in Figure: LPSPI slave mode timing (CPHA = 0) and Figure: LPSPI slave mode timing (CPHA = 1) • In Thermal characteristics : • Updated the name of table: Thermal characteristics for 32-pin QFN and 48/64/100/144/176-pin LQFP package • Deleted specs for $R_{\theta JC}$ for 32 QFN package • Added '$R_{\theta JCBottom}$'
8	18 June 2018	• In attachement '*S32K1xx_Power_Modes _Configuration*': • Updated VLPR peripherals disabled and Peripherals Enabled use case #1, using 4 Mhz for System clock, 2 Mhz for bus clock, and 1Mhz for flash. • Removed S32K116 from Notes • In figure: S32K1xx product series comparison : • Added note 'Availability of peripherals depends on the pin availability ...' • Updated 'Ambient Operation Temperature' row • Updated 'System RAM (including FlexRAM and MTB)' row for S32K144, S32K146, and S32K148 • In Ordering information : • Updated figure for 'Y: Optional feature' • Updated footnote 3 • In Power and ground pins : • In figure 'Power diagram', updtaed V_{Flash} frequency to 3.3 V • In Power mode transition operating behaviors : • Updated footnote for 'VLPS Mode: All clock sources disabled' • In Power consumption : • Added IDDs for S32K116 • Added VLPR Peripherals enabled use case 2 at 125 °C/Typicals • Renamed VLPR 'Peripherals enabled' to 'Peripherals enabled use case 1' • Added footnote 'Data collected using RAM' to VLPR 'Peripherals disabled' and VLPR 'Peripherals enabled use case 1' • Updated VLPS Peripherals enabled at 25 °C/Typicals for S32K142 and S32K144 to 40 µA and 42 µA respectively • Added table 'VLPS additional use-case power consumption at typical conditions' • In DC electrical specifications at 3.3 V Range : • Updated naming conventions • Added specs for GPIO-FAST pad • In DC electrical specifications at 5.0 V Range : • Updated naming conventions • Added specs for GPIO-FAST pad • In AC electrical specifications at 3.3 V range : • Updated naming conventions • Added specs for GPIO-FAST pad • In AC electrical specifications at 5 V range : • Updated naming conventions • Added specs for GPIO-FAST pad • In External System Oscillator electrical specifications : • Clarified description of g_{mXOSC} • Updated V_{IL} max. to 1.15 V • In Fast internal RC Oscillator (FIRC) electrical specifications :

Table continues on the next page...

Table 43. Revision History (continued)

Rev. No.	Date	Substantial Changes
		• Updated specs for T_{JIT} Cycle-to-Cycle jitter to 300 ps • In QuadSPI AC specifications : • Updated specs for T_{iv} Data Output In-Valid Time • In figure 'QuadSPI output timing (SDR mode) diagram', marked Invalid area • In CMP with 8-bit DAC electrical specifications : • Removed '(VAIO)' from decription of V_{HYST0} • In LPSPI electrical specifications : • Added note 'Undefined' in figures 'LPSPI slave mode timing (CPHA = 0)' and 'LPSPI slave mode timing (CPHA = 1)'
9	18 Sep 2018	• In attachment '*S32K1xx_Power_Modes _Configuration*': • Added separate sheet for S32K14x and S32K11x devices • Renamed VLPS (Peripherals Enabled) to VLPS (LPTMR enabled) • Removed Note "Technical information ..." • In Features: • Updated Clock interfaces for '4 – 40 MHz fast external oscillator (SOSC)' and 'Real Time Counter' • Added 'Up to 20 MHz TCLK and 25 MHz SWD_CLK' • In Absolute maximum ratings : Updated footnote 3 '60 seconds lifetime ... ' • Updated title of table Thermal operating characteristics • In Ordering information : • Updated 'Temperature' • Updated 'Wafer Fab and Mask revision identifier' • In Power consumption : • Renamed 'VLPS Peripheral enabled' to 'LPTMR enabled' • Added IDDs for S32K118 for 85 °C, 105 °C and 125 °C • Updated IDDs for S32K118 for 25 °C • Added IDDs for VLPR Peripherals enabled use case 2 for S32K116 • Updated IDDs and added footnotes in table 'VLPS additional use-case power consumption at typical conditions' • In General AC specifications : • Updated footnote of WFRST and WNFRST • In External System Oscillator electrical specifications : • Added footnote to R_S • Renamed V_{pp} to V_{pp_XTAL} and updated the description accordingly • Added V_{pp_EXTAL} • Added V_{SOSCOP} • Updated equation 'gm_crit = 4 ...' in footnote 1 • In External System Oscillator frequency specifications : • Added footnote "For an ideal clock of 40 MHz, if permitted ..." to f_{osc_hi} max. • In Fast internal RC Oscillator (FIRC) electrical specifications : • Updated note "Fast internal ... " • In LPSPI electrical specifications : • Updated figures 'LPSPI slave mode timing (CPHA = 0)' and 'LPSPI slave mode timing (CPHA = 1)'
10	09 May 2019	• In Notes: Added note 'Technical information for the S32K148 ... ' • In attachment '*S32K1xx_Orderable_Part_Number_List*': • Added ISELED PN • Added PN for new package offering (48-pin LQFP S32K142; 48-pin LQFP S32K144; 100-pin LQFP S32K148) • Added NFC PN • Added UA as S32K148 Standard PN • Updated Standard Base Feature Offer • In figure 'S32K1xx product series comparison' :

Table continues on the next page...

Table 43. Revision History (continued)

Rev. No.	Date	Substantial Changes
		• Added 48-pin LQFP for S32K142 and S32K144 • Added 100-pin LQFP for S32K148, along with footnote • In Ordering information : • Updated 'Ordering option' • Updated note 2 • In Thermal characteristics : • Added values for 48-pin LQFP for S32K142 and S32K144 • Added values for 100-pin LQFP for S32K148
11	27 June 2019	• In Notes: Removed note 'Technical information for the S32K148 ... '

How to Reach Us:

Home Page:
nxp.com

Web Support:
nxp.com/support

Information in this document is provided solely to enable system and software implementers to use NXP products. There are no express or implied copyright licenses granted hereunder to design or fabricate any integrated circuits based on the information in this document. NXP reserves the right to make changes without further notice to any products herein.

NXP makes no warranty, representation, or guarantee regarding the suitability of its products for any particular purpose, nor does NXP assume any liability arising out of the application or use of any product or circuit, and specifically disclaims any and all liability, including without limitation consequential or incidental damages. “Typical” parameters that may be provided in NXP data sheets and/or specifications can and do vary in different applications, and actual performance may vary over time. All operating parameters, including “typicals,” must be validated for each customer application by customer’s technical experts. NXP does not convey any license under its patent rights nor the rights of others. NXP sells products pursuant to standard terms and conditions of sale, which can be found at the following address: nxp.com/SalesTermsandConditions.

While NXP has implemented advanced security features, all products may be subject to unidentified vulnerabilities. Customers are responsible for the design and operation of their applications and products to reduce the effect of these vulnerabilities on customer's applications and products, and NXP accepts no liability for any vulnerability that is discovered. Customers should implement appropriate design and operating safeguards to minimize the risks associated with their applications and products.

NXP, the NXP logo, NXP SECURE CONNECTIONS FOR A SMARTER WORLD, COOLFLUX, EMBRACE, GREENCHIP, HITAG, I2C BUS, ICODE, JCOP, LIFE VIBES, MIFARE, MIFARE CLASSIC, MIFARE DESFire, MIFARE PLUS, MIFARE FLEX, MANTIS, MIFARE ULTRALIGHT, MIFARE4MOBILE, MIGLO, NTAG, ROADLINK, SMARTLX, SMARTMX, STARPLUG, TOPFET, TRENCHMOS, UCODE, Freescale, the Freescale logo, AltiVec, C-5, CodeTEST, CodeWarrior, ColdFire, ColdFire+, C-Ware, the Energy Efficient Solutions logo, Kinetis, Layerscape, MagniV, mobileGT, PEG, PowerQUICC, Processor Expert, QorIQ, QorIQ Qonverge, Ready Play, SafeAssure, the SafeAssure logo, StarCore, Symphony, VortiQa, Vybrid, Airfast, BeeKit, BeeStack, CoreNet, Flexis, MXC, Platform in a Package, QUICC Engine, SMARTMOS, Tower, TurboLink, and UMEMS are trademarks of NXP B.V. All other product or service names are the property of their respective owners. AMBA, Arm, Arm7, Arm7TDMI, Arm9, Arm11, Artisan, big.LITTLE, Cordio, CoreLink, CoreSight, Cortex, DesignStart, DynamIQ, Jazelle, Keil, Mali, Mbed, Mbed Enabled, NEON, POP, RealView, SecurCore, Socrates, Thumb, TrustZone, ULINK, ULINK2, ULINK-ME, ULINK-PLUS, ULINKpro, µVision, Versatile are trademarks or registered trademarks of Arm Limited (or its subsidiaries) in the US and/or elsewhere. The related technology may be protected by any or all of patents, copyrights, designs and trade secrets. All rights reserved. Oracle and Java are registered trademarks of Oracle and/or its affiliates. The Power Architecture and Power.org word marks and the Power and Power.org logos and related marks are trademarks and service marks licensed by Power.org.

© 2015–2019 NXP B.V.

Document Number S32K1XX
Revision 11, 06/2019

Mouser Electronics

Authorized Distributor

Click to View Pricing, Inventory, Delivery & Lifecycle Information:

NXP:

FS32K146HAT0MLLT FS32K148HNT0VLUR FS32K144UAT0VMHT FS32K144HNT0MLHT FS32K148HNT0VLUT FS32K146HRT0CLLT FS32K146HAT0MLQT FS32K146HAT0MLHT FS32K146UAT0VLLT FS32K144MRT0VLHT FS32K148HRT0VLQT FS32K144UST0VLHT FS32K148HRT0VLUT FS32K144HNT0MLHR FS32K148HAT0VLQT FS32K146HRT0CLHT FS32K148HAT0MLQT FS32K146UAT0VLQT FS32K146UAT0VLHT FS32K148HAT0MLUT FS32K142MRT0CLHT FS32K142UAT0VLHR FS32K142MRT0CLHR FS32K148HFT0MLQT FS32K148HFT0MLUT FS32K148URT0VLUR FS32K148URT0VLUT FS32K144HNT0CLLR FS32K142HAT0VLHT FS32K144HAT0MLLR FS32K144HAT0MLLT FS32K144HRT0VLHT FS32K144MNT0VLLR FS32K144URT0VLHT FS32K146HNT0VLLT FS32K144HRT0MLLR FS32K144HRT0CLLT FS32K144HFT0VLLT FS32K144HNT0CLLT FS32K144HAT0MLHT FS32K144HAT0VLHT FS32K142MNT0VLLT FS32K148HFT0VLQR FS32K142URT0VLHT FS32K144HAT0CLHT FS32K144HAT0MLHR FS32K148HET0MLQT FS32K148HFT0VLQT FS32K142MNT0VLLR FS32K142UAT0VLHT FS32K148HET0CLQT FS32K144HFT0VLHR FS32K144MAT0CMHT FS32K142HFT0MLHT FS32K144HRT0MLHT FS32K148URT0VLQR FS32K144HRT0MLHR FS32K144MFT0VLHR FS32K142HRT0VLHR FS32K144MAT0VLHT FS32K146HAT0VLHT FS32K144HAT0VLLT FS32K144HRT0VMHR FS32K148URT0VLQT FS32K142HAT0MLHT FS32K148UJT0VMHT FS32K142HFT0MLLT FS32K144MAT0VLHR FS32K144MNT0VLHR FS32K148UJT0VLUT FS32K142UAT0VLLT FS32K144HRT0VLHR FS32K146HAT0VLHR FS32K144HFT0MLHT FS32K144UFT0VLLT FS32K144MFT0VLHT FS32K148UJT0VLQT FS32K144HRT0VMHT FS32K148UAT0VLQT FS32K142HRT0VLHT FS32K148HET0MLQR FS32K148UAT0VLQR FS32K144HAT0VLHR FS32K148HST0MLQT FS32K144UAT0VLHT FS32K144MNT0VLHT FS32K148HET0CLQR FS32K148UAT0VMHT FS32K142HAT0MLLT FS32K142MAT0MLLT FS32K144UAT0VLLT FS32K144HFT0VLHT FS32K144HRT0CLHT FS32K144MRT0CLLT FS32K144UAT0VLHR FS32K144HAT0CLLT FS32K144HRT0VLLT FS32K144MNT0VLLT FS32K144HRT0MLLT FS32K144UFT0VLHR