EL5160, EL5161, EL5260, EL5261, EL5360

200MHz Low-Power Current Feedback Amplifiers

FN7387
Rev 11.00
August 11, 2015

The EL5160, EL5161, EL5260, EL5261, and EL5360 are current feedback amplifiers with a bandwidth of 200MHz and operate from just 0.75mA supply current. This makes these amplifiers ideal for today's high speed video and monitor applications.

With the ability to run from a single supply voltage from 5V to 10V, these amplifiers are ideal for handheld, portable, or battery-powered equipment.

The EL5160, EL5260, and EL5360 also incorporate an enable and disable function to reduce the supply current to 14µA typical per amplifier. Allowing the $\overline{CE}$ pin to float or applying a low logic level enables the corresponding amplifier.

The EL5160 is available in the 6 Ld SOT-23 and 8 Ld SOIC packages, the EL5161 in 5 Ld SOT-23 package, the EL5260 in the 10 Ld MSOP package, the EL5261 in 8 Ld SOIC package, the EL5360 in 16 Ld SOIC and QSOP packages. All operate over the industrial temperature range of -40°C to +85°C.

Features

- 200MHz -3dB bandwidth
- 0.75mA supply current
- 1700V/µs slew rate
- Single and dual supply operation, from 5V to 10V supply span
- Fast enable/disable (EL5160, EL5260 and EL5360 only)
- Available in SOT-23 packages
- Pb-Free (RoHS compliant)

Applications

- Battery-powered equipment
- Handheld, portable devices
- Video amplifiers
- Cable drivers
- RGB amplifiers
- Test equipment
- Instrumentation
- Current-to-voltage converters

Pinouts

EL5160
(8 LD SOIC)
TOP VIEW

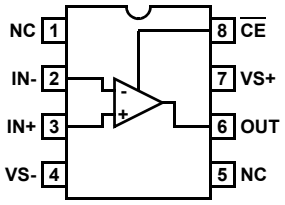

EL5160
(6 LD SOT-23)
TOP VIEW

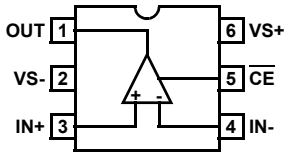

EL5161
(5 LD SOT-23)
TOP VIEW

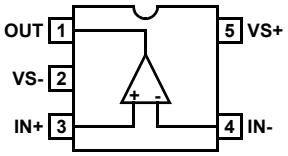

EL5260
(10 LD MSOP)
TOP VIEW

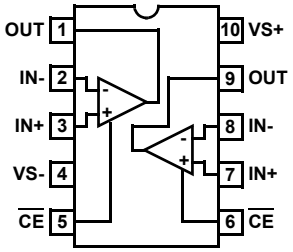

EL5261
(8 LD SOIC)
TOP VIEW

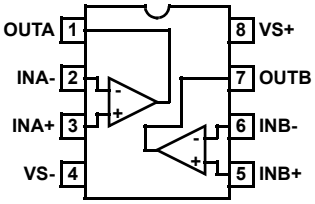

EL5360
(16 LD SOIC, QSOP)
TOP VIEW

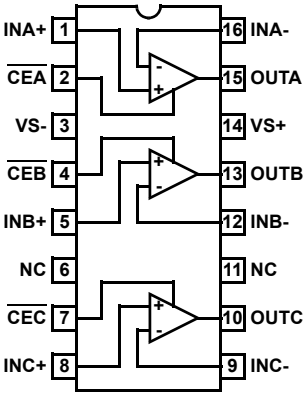

Ordering Information

PART NUMBER (Notes 2, 3)	PART MARKING	TAPE & REEL	PACKAGE (Pb-free)	PKG. DWG. #
EL5160ISZ	5160ISZ	-	8 Ld SOIC (150 mil)	M8.15E
EL5160ISZ-T7 (Note 1)	5160ISZ	7”	8 Ld SOIC (150 mil)	M8.15E
EL5160ISZ-T7A (Note 1)	5160ISZ	7”	8 Ld SOIC (150 mil)	M8.15E
EL5160ISZ-T13 (Note 1)	5160ISZ	13”	8 Ld SOIC (150 mil)	M8.15E
EL5160IWZ-T7 (Note 1)	BAAN (Note 4)	7” (3k pcs)	6 Ld SOT-23	P6.064A
EL5160IWZ-T7A (Note 1)	BAAN (Note 4)	7” (250 pcs)	6 Ld SOT-23	P6.064A
EL5161IWZ-T7 (Note 1)	BAJA (Note 4)	7” (3k pcs)	5 Ld SOT-23	P6.064A
EL5161IWZ-T7A (Note 1)	BAJA (Note 4)	7” (250 pcs)	5 Ld SOT-23	P6.064A
EL5260IYZ (No longer available or supported)	BAAAK	-	10 Ld MSOP (3.0mm)	M10.118A
EL5260IYZ-T7 (Note 1) (No longer available or supported)	BAAAK	7”	10 Ld MSOP (3.0mm)	M10.118A
EL5260IYZ-T13 (Note 1) (No longer available or supported)	BAAAK	13”	10 Ld MSOP (3.0mm)	M10.118A
EL5261ISZ (No longer available or supported)	5261ISZ	-	8 Ld SOIC (150 mil)	M8.15E
EL5261ISZ-T7 (Note 1) (No longer available or supported)	5261ISZ	7”	8 Ld SOIC (150 mil)	M8.15E
EL5261ISZ-T13 (Note 1) (No longer available or supported)	5261ISZ	13”	8 Ld SOIC (150 mil)	M8.15E
EL5360ISZ (No longer available or supported)	EL5360ISZ	-	16 Ld SOIC (150 mil)	MDP0027
EL5360ISZ-T7 (Note 1) (No longer available or supported)	EL5360ISZ	7”	16 Ld SOIC (150 mil)	MDP0027
EL5360ISZ-T13 (Note 1) (No longer available or supported)	EL5360ISZ	13”	16 Ld SOIC (150 mil)	MDP0027
EL5360IUZ(No longer available or supported)	5360IUZ	-	16 Ld QSOP (150 mil)	MDP0040
EL5360IUZ-T7 (Note 1) (No longer available or supported)	5360IUZ	7”	16 Ld QSOP (150 mil)	MDP0040
EL5360IUZ-T13 (Note 1) (No longer available or supported)	5360IUZ	13”	16 Ld QSOP (150 mil)	MDP0040

NOTES:

1. Please refer to TB347 for details on reel specifications.
2. Intersil Pb-free plus anneal products employ special Pb-free material sets; molding compounds/die attach materials and 100% matte tin plate termination finish, which are RoHS compliant and compatible with both SnPb and Pb-free soldering operations. Intersil Pb-free products are MSL classified at Pb-free peak reflow temperatures that meet or exceed the Pb-free requirements of IPC/JEDEC J STD-020.
3. For Moisture Sensitivity Level (MSL), please see product information page for EL5160, EL5161, EL5260, EL5261, EL5360. For more information on MSL, please see tech brief TB363.
4. The part marking is located on the bottom of the part.

Absolute Maximum Ratings (T_A = +25°C)

Supply Voltage between V_S+ and V_S- 13.2V
Maximum Continuous Output Current 50mA
Slew Rate of V_S+ to V_S- 1V/µs
Pin Voltages. . . . . (V_S-) - 0.5V to (V_S+) + 0.5V

Thermal Information

Maximum Operating Junction Temperature . . . . . +125°C
Maximum Power Dissipation . . . . . see curves on page 7
Maximum Storage Temperature Range . . . . . -65°C to +150°C
Ambient Operating Temperature Range . . . . . -40°C to +85°C
Pb-free reflow profile . . . . . see link below
http://www.intersil.com/pbfree/Pb-FreeReflow.asp

CAUTION: Stresses above those listed in "Absolute Maximum Ratings" may cause permanent damage to the device. This is a stress only rating and operation of the device at these or any other conditions above those indicated in the operational sections of this specification is not implied.

Electrical Specifications

V_S+ = +5V, V_S- = -5V, R_F = 750Ω for A_V = 1, R_L = 150Ω, $V_{CE, H}$ = V_S+, $V_{CE, L}$ = (V_S+) -3V, T_A = +25°C, Unless Otherwise Specified. **Boldface limits apply across the operating temperature range, -40°C to +85°C.**

PARAMETER	DESCRIPTION	CONDITIONS	MIN (Note 6)	TYP	MAX (Note 6)	UNIT
AC PERFORMANCE						
BW	-3dB Bandwidth	A_V = +1, R_L = 500Ω		200		MHz
		A_V = +2, R_L = 150Ω		125		MHz
BW1	0.1dB Bandwidth	R_L = 100Ω		10		MHz
SR	Slew Rate	V_O = -2.5V to +2.5V, A_V = +2, R_F = R_G = 1kΩ, R_L = 100Ω	**900**	1700	**2500**	V/µs
		EL5260, EL5261	**800**	1300	**2500**	V/µs
SR	500Ω Load			1360		V/µs
t_S	0.1% Settling Time	V_{OUT} = -2.5V to +2.5V, A_V = +2		35		ns
e_N	Input Voltage Noise			4		nV/√Hz
i_N-	IN- Input Current Noise			7		pA/√Hz
i_N+	IN+ Input Current Noise			8		pA/√Hz
HD2		5MHz, 2.5V_{P-P}, R_L = 150Ω, A_V = +2		-74		dBc
HD3		5MHz, 2.5V_{P-P}, R_L = 150Ω, A_V = +2		-50		dBc
dG	Differential Gain Error (Note 5)	A_V = +2		0.1		%
dP	Differential Phase Error (Note 5)	A_V = +2		0.1		°
DC PERFORMANCE						
V_{OS}	Offset Voltage		**-5**	1.6	**+5**	mV
T_CV_{OS}	Input Offset Voltage Temperature Coefficient	Measured from T_{MIN} to T_{MAX}		6		µV/°C
R_{OL}	Open Loop Transimpedance Gain	±2.5V_{OUT} into 150Ω	**800**	2000		kΩ
INPUT CHARACTERISTICS						
CMIR	Common Mode Input Range	Guaranteed by CMRR test	**±3**	±3.3		V
CMRR	Common Mode Rejection Ratio	V_{IN} = ±3V	**50**	62	**75**	dB
-ICMR	- Input Current Common Mode Rejection		**-1**		**+1**	µA/V
+I_{IN}	+ Input Current		**-4**		**+4**	µA
-I_{IN}	- Input Current		**-5**		**+5**	µA
R_{IN}	Input Resistance		**1.5**	4	**15**	MΩ
C_{IN}	Input Capacitance			1		pF

Electrical Specifications $V_S+ = +5V$, $V_{S-} = -5V$, $R_F = 750\Omega$ for $A_V = 1$, $R_L = 150\Omega$, $V_{CE, H} = V_S+$, $V_{CE, L} = (V_S+) -3V$, $T_A = +25°C$, Unless Otherwise Specified. **Boldface limits apply across the operating temperature range, -40°C to +85°C. (Continued)**

PARAMETER	DESCRIPTION	CONDITIONS	MIN (Note 6)	TYP	MAX (Note 6)	UNIT
OUTPUT CHARACTERISTICS						
V_O	Output Voltage Swing	R_L = 150Ω to GND	**±3.1**	±3.4	**±3.8**	V
		R_L = 1kΩ to GND	**±3.8**	±4.0	**±4.2**	V
I_{OUT}	Output Current	R_L = 10Ω to GND	**40**	70	**140**	mA
SUPPLY						
I_{SON}	Supply Current - Enabled, per Amplifier	No load, V_{IN} = 0V (EL5160, EL5161, EL5260, EL5261)	**0.6**	0.75	**0.85**	mA
		No load, V_{IN} = 0V (EL5360)	**0.6**	0.8	**0.92**	mA
$I_{SOFF}+$	Supply Current - Disabled, per Amplifier	No load, V_{IN} = 0V, Only EL5160, EL5260, EL5360	**0**	10	**25**	µA
$I_{SOFF}-$	Supply Current - Disabled, per Amplifier		**-25**	-14	**0**	µA
PSRR	Power Supply Rejection Ratio	DC, V_S = ±4.75V to ±5.25V	**65**	74		dB
-IPSR	- Input Current Power Supply Rejection	DC, V_S = ±4.75V to ±5.25V	**-0.5**	0.1	**0.5**	µA/V
ENABLE (EL5160, EL5260, EL5360 ONLY)						
t_{EN}	Enable Time			600		ns
t_{DIS}	Disable Time			800		ns
$I_{CE, H}$	$\overline{CE}$ Pin Input High Current	$\overline{CE} = V_S+$	**1**	5	**25**	µA
$I_{CE, L}$	$\overline{CE}$ Pin Input Low Current	$\overline{CE} = (V_S+) - 5V$	**-1**	0	**1**	µA

NOTE:

5. Standard NTSC test, AC signal amplitude = 286mV_{P-P}, f = 3.58MHz.
6. Compliance to datasheet limits is assured by one or more methods: production test, characterization and/or design.

Typical Performance Curves

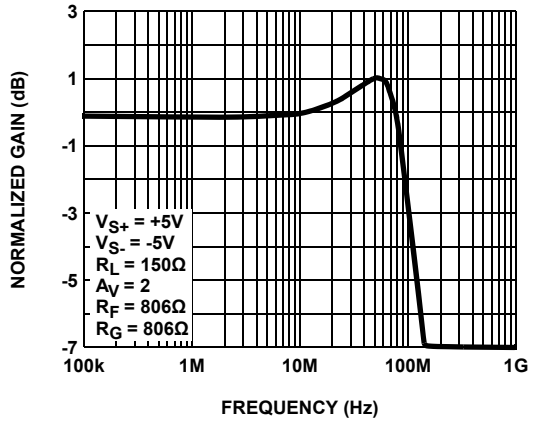

FIGURE 1. FREQUENCY RESPONSE (A_V = +2)

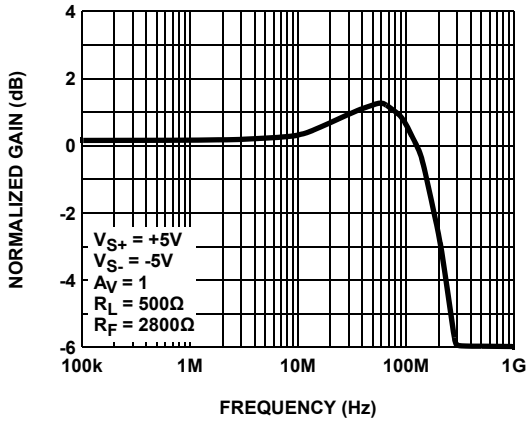

FIGURE 2. FREQUENCY RESPONSE (A_V = +1)

Typical Performance Curves (Continued)

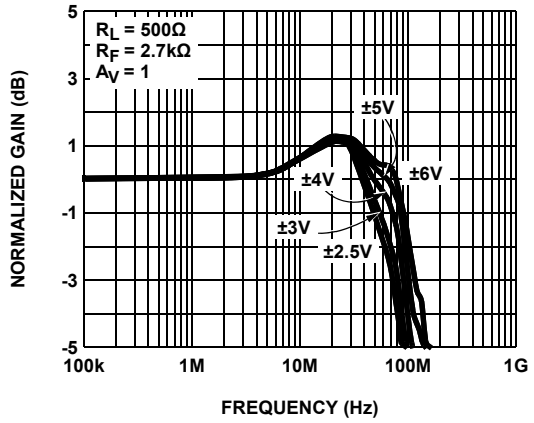

FIGURE 3. FREQUENCY RESPONSE FOR VARIOUS $\pm V_S$

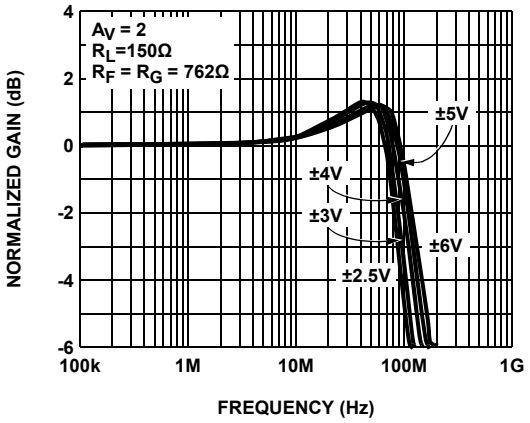

FIGURE 4. FREQUENCY RESPONSE FOR VARIOUS SUPPLY VOLTAGES

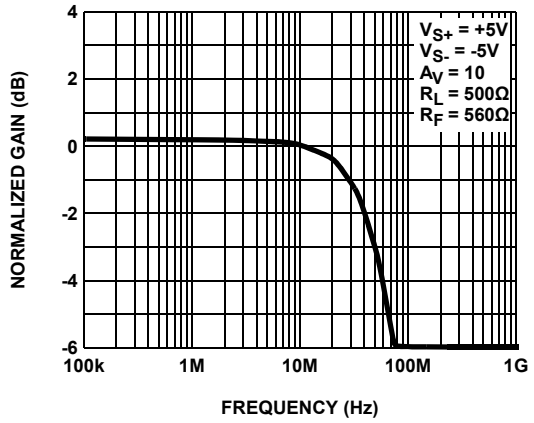

FIGURE 5. FREQUENCY RESPONSE (A_V = +10)

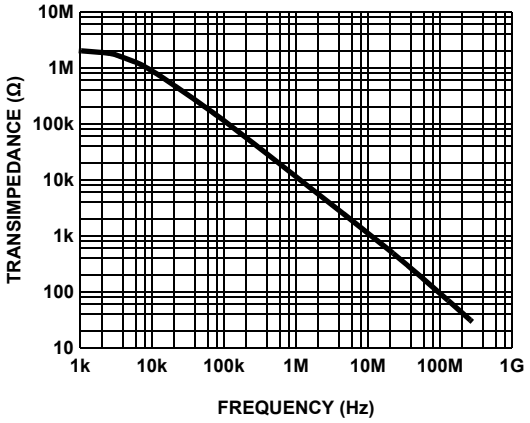

FIGURE 6. OPEN LOOP TRANSIMPEDANCE GAIN vs FREQUENCY (R_{OL})

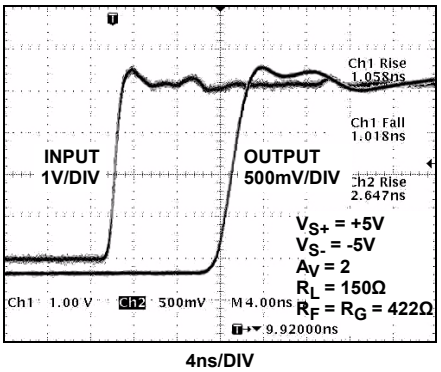

FIGURE 7. OUTPUT RISE TIME

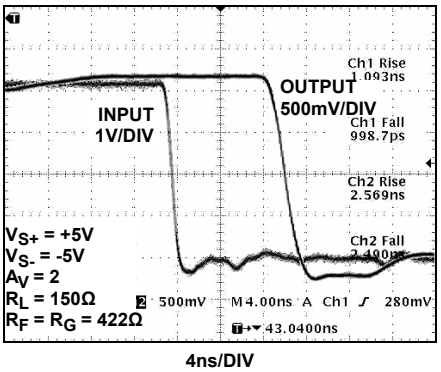

FIGURE 8. OUTPUT FALL TIME

Typical Performance Curves (Continued)

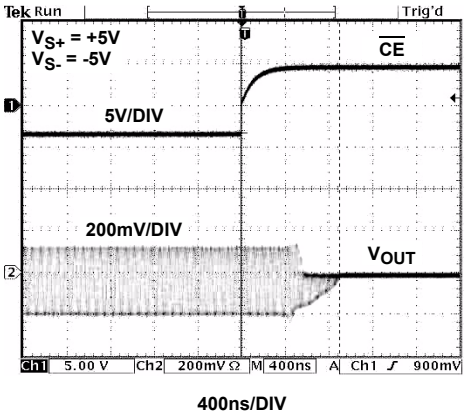

FIGURE 9. DISABLE DELAY TIME

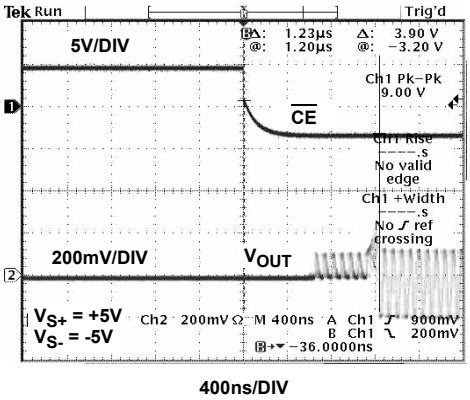

FIGURE 10. ENABLE DELAY TIME

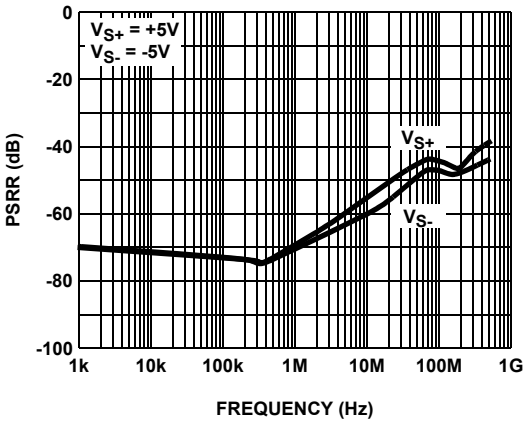

FIGURE 11. PSRR vs FREQUENCY

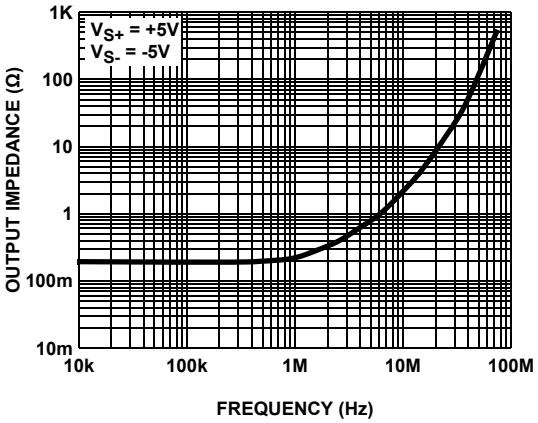

FIGURE 12. CLOSED LOOP OUTPUT IMPEDANCE vs FREQUENCY

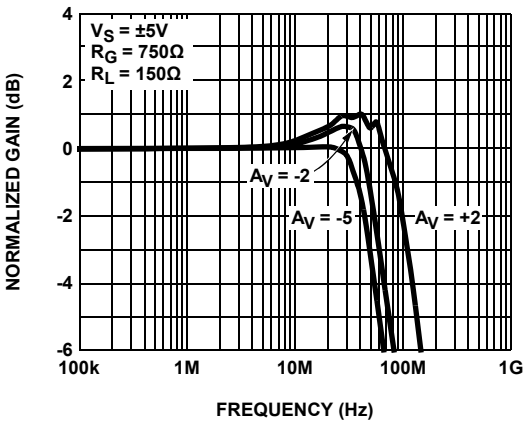

FIGURE 13. FREQUENCY RESPONSE FOR VARIOUS GAIN SETTINGS

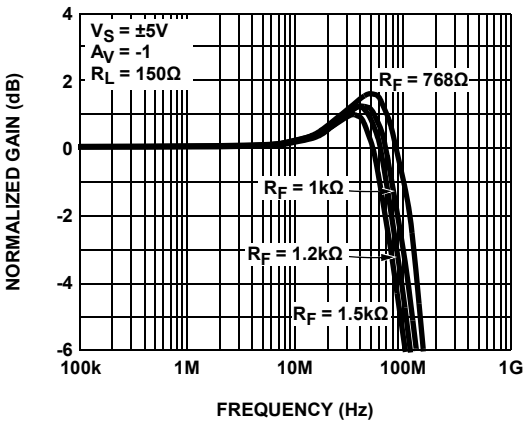

FIGURE 14. FREQUENCY RESPONSE FOR VARIOUS FEEDBACK RESISTORS, A_V = -1

Typical Performance Curves (Continued)

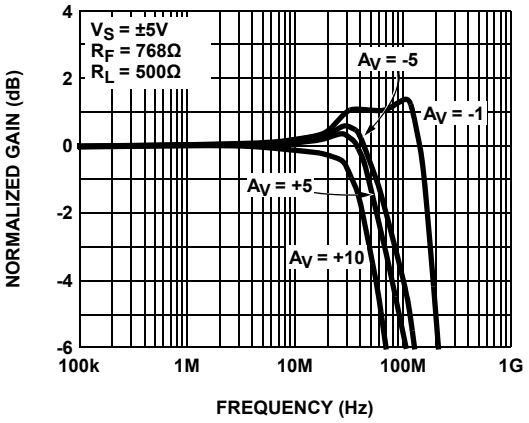

FIGURE 15. FREQUENCY RESPONSE FOR VARIOUS GAIN SETTINGS

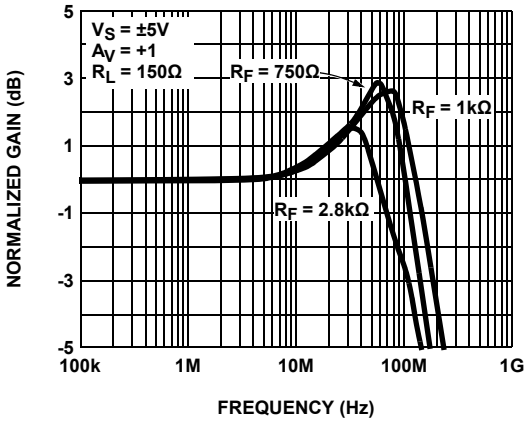

FIGURE 16. FREQUENCY RESPONSE FOR VARIOUS FEEDBACK RESISTORS, A_V = +1

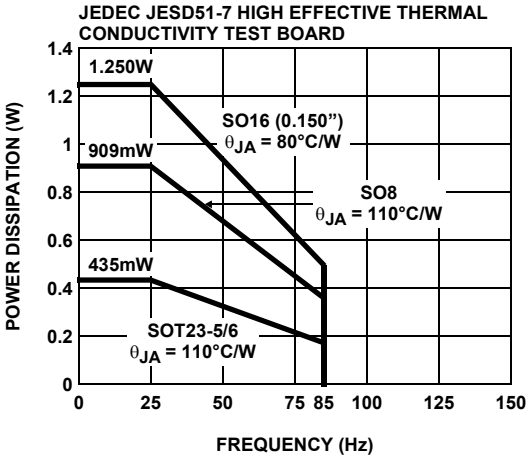

FIGURE 17. PACKAGE POWER DISSIPATION vs AMBIENT TEMPERATURE

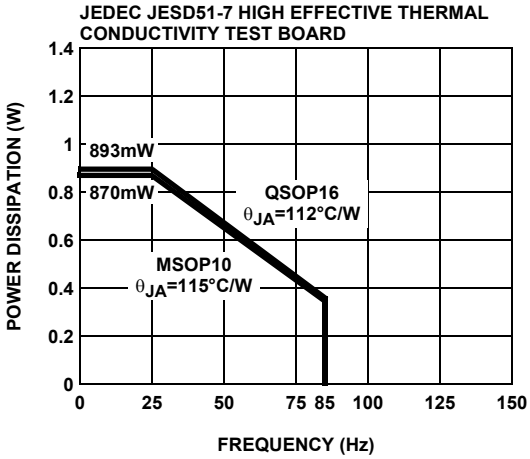

FIGURE 18. PACKAGE POWER DISSIPATION vs AMBIENT TEMPERATURE

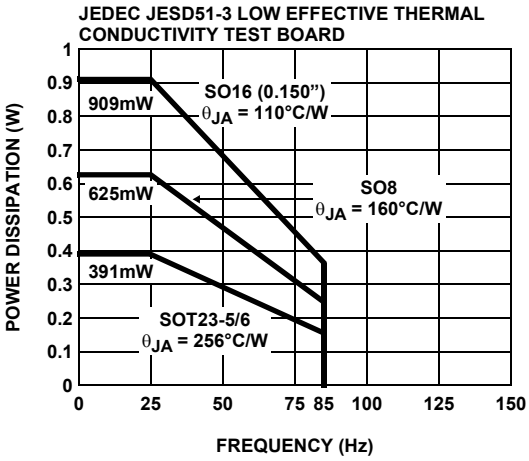

FIGURE 19. PACKAGE POWER DISSIPATION vs AMBIENT TEMPERATURE

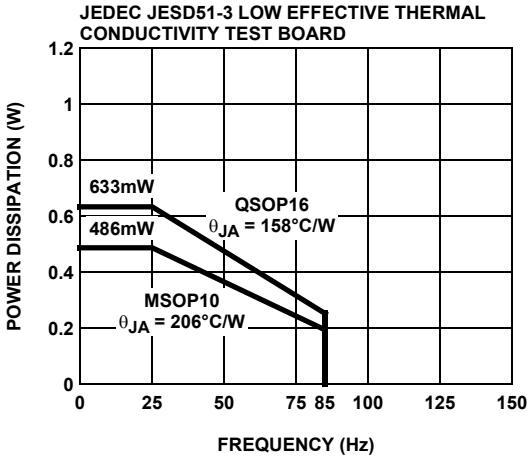

FIGURE 20. PACKAGE POWER DISSIPATION vs AMBIENT TEMPERATURE

Pin Descriptions

EL5160 (8 Ld SOIC)	EL5160 (6 Ld SOT-23)	EL5161	EL5260	EL5261	EL5360	PIN NAME	FUNCTION	EQUIVALENT CIRCUIT
1, 5	-	-	-	-	6, 11	NC	Not connected	
2	4	4	2, 8	2, 6	9, 12, 16	IN-	Inverting input	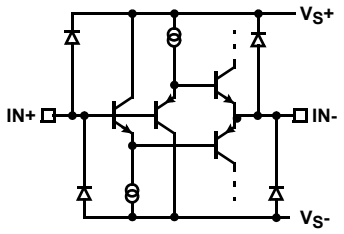 Circuit 1
3	3	3	3, 7	3, 5	1, 5, 8	IN+	Non-inverting input	(See circuit 1)
4	2	2	4	4	3	V_{S-}	Negative supply	
6	1	1	1, 9	1, 7	10, 13, 15	OUT	Output	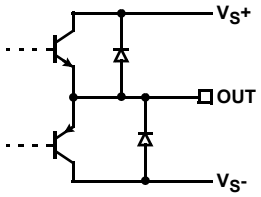 Circuit 2
7	6	5	10	8	14	V_{S+}	Positive supply	
8	5	-	5, 6	-	2, 4, 7	$\overline{CE}$	Chip enable	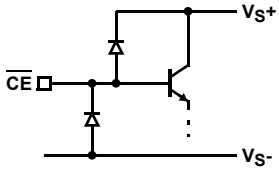 Circuit 3

Applications Information

Product Description

The EL5160, EL5161, EL5260, EL5261, and EL5360 are low power, current-feedback operational amplifiers that offer a wide -3dB bandwidth of 200MHz and a low supply current of 0.75mA per amplifier. The EL5160, EL5161, EL5260, EL5261, and EL5360 work with supply voltages ranging from a single 5V to 10V and they are also capable of swinging to within 1V of either supply on the output. Because of their current-feedback topology, the EL5160, EL5161, EL5260, EL5261, and EL5360 do not have the normal gain-bandwidth product associated with voltage-feedback operational amplifiers. Instead, their -3dB bandwidth remains relatively constant as closed-loop gain is increased. This combination of high bandwidth and low power, together with aggressive pricing make the EL5160, EL5161, EL5260, EL5261, and EL5360 ideal choices for many low-power/high-bandwidth applications such as portable, handheld, or battery-powered equipment.

Power Supply Bypassing and Printed Circuit Board Layout

As with any high frequency device, good printed circuit board layout is necessary for optimum performance. Low impedance ground plane construction is essential. Surface mount components are recommended, but if leaded components are used, lead lengths should be as short as possible. The power supply pins must be well bypassed to reduce the risk of oscillation. The combination of a 4.7µF tantalum capacitor in parallel with a 0.01µF capacitor has been shown to work well when placed at each supply pin.

For good AC performance, parasitic capacitance should be kept to a minimum, especially at the inverting input. (See the “Capacitance at the Inverting Input” section) Even when ground plane construction is used, it should be removed from the area near the inverting input to minimize any stray capacitance at that node. Carbon or Metal-Film resistors are acceptable with the Metal-Film resistors giving slightly less peaking and bandwidth because of additional series inductance. Use of sockets, particularly for the SO package, should be avoided if possible. Sockets add parasitic inductance and capacitance which results in additional peaking and overshoot.

Disable/Power-Down

The EL5160, EL5260, EL5360 amplifiers can be disabled, placing the output in a high impedance state. When disabled, the amplifier supply current reduces to <15µA. The amplifiers disable when their $\overline{CE}$ pin is pulled up to within 1V of the positive supply. Similarly, the amplifier is enabled by floating or pulling its $\overline{CE}$ pin to at least 3V below the positive supply. For a ±5V supply, this means that an amplifier is enabled when $\overline{CE}$ is 2V or less, and disabled when $\overline{CE}$ is above 4V. Although the logic levels are not standard TTL, this choice of logic voltages allows an amplifier to be enabled by tying $\overline{CE}$ to ground, even in 5V single supply applications. The $\overline{CE}$ pin can be driven from CMOS outputs.

Capacitance at the Inverting Input

Any manufacturer's high-speed voltage- or current-feedback amplifier can be affected by stray capacitance at the inverting input. For inverting gains, this parasitic capacitance has little effect because the inverting input is a virtual ground, but for non-inverting gains, this capacitance (in conjunction with the feedback and gain resistors) creates a pole in the feedback path of the amplifier. This pole, if low enough in frequency, has the same destabilizing effect as a zero in the forward open-loop response. The use of large-value feedback and gain resistors exacerbates the problem by further lowering the pole frequency (increasing the possibility of oscillation.)

The EL5160, EL5161, EL5260, EL5261, and EL5360 are optimized for an 806Ω (A_V = +2) feedback resistor. With the high bandwidth of these amplifiers, these resistor values might cause stability problems when combined with parasitic capacitance, thus ground plane is not recommended around the inverting input pin of the amplifier.

Feedback Resistor Values

The EL5160, EL5161, EL5260, EL5261, and EL5360 have been designed and specified at a gain of +2 with R_F approximately 806Ω. This value of feedback resistor gives 125MHz of -3dB bandwidth at A_V = 2 with 1dB of peaking. Since the EL5160, EL5161, EL5260, EL5261, and EL5360 are current-feedback amplifiers, it is also possible to change the value of R_F to get more bandwidth. As seen in the curve of Frequency Response for Various R_F and R_G on page 5, bandwidth and peaking can be easily modified by varying the value of the feedback resistor.

Because the EL5160, EL5161, EL5260, EL5261, and EL5360 are current-feedback amplifiers, their gain-bandwidth product is not a constant for different closed-loop gains. This feature actually allows the EL5160, EL5161, EL5260, EL5261, and EL5360 to maintain about the same -3dB bandwidth. As gain is increased, bandwidth decreases slightly while stability increases. Since the loop stability is improving with higher closed-loop gains, it becomes possible to reduce the value of R_F below the specified 806Ω value and still retain stability, resulting in only a slight loss of bandwidth with increased closed-loop gain.

Supply Voltage Range and Single-Supply Operation

The EL5160, EL5161, EL5260, EL5261, and EL5360 have been designed to operate with supply voltages having a span of 5V to 10V. In practical terms, this means that they will operate on dual supplies ranging from ±2.5V to ±5V. With single-supply, the EL5160, EL5161, EL5260, EL5261, and EL5360 will operate from 5V to 10V.

As supply voltages continue to decrease, it becomes necessary to provide input and output voltage ranges that can get as close as possible to the supply voltages. The EL5160, EL5161, EL5260, EL5261, and EL5360 have an input range which extends to within 2V of either supply. So, for example, with ±5V supplies, the EL5160, EL5161, EL5260, EL5261, and EL5360 have an input range which spans ±3V. The output range of the EL5160, EL5161, EL5260, EL5261, and EL5360 is also quite large, extending to within 1V of the supply rail. On a ±5V supply, the output is therefore capable of swinging from -4V to +4V. Single-supply output range is larger because of the increased negative swing due to the external pull-down resistor to ground.

Video Performance

For good video performance, an amplifier is required to maintain the same output impedance and the same frequency response as DC levels are changed at the output. This is especially difficult when driving a standard video load of 150Ω, because of the change in output current with DC level. Previously, good differential gain could only be achieved by running high idle currents through the output transistors (to reduce variations in output impedance.) These currents were typically comparable to the entire 1mA supply current of each EL5160, EL5161, EL5260, EL5261, and EL5360 amplifier. Special circuitry has been incorporated in the EL5160, EL5161, EL5260, EL5261, and EL5360 to reduce the variation of output impedance with current output. This results in dG and dP specifications of 0.1% and 0.1°, while driving 150Ω at a gain of 2.

Video performance has also been measured with a 500Ω load at a gain of +1. Under these conditions, the EL5160 has dG and dP specifications of 0.1% and 0.1°.

Output Drive Capability

In spite of their low 1mA per amplifier supply current, the EL5160, EL5161, EL5260, EL5261, and EL5360 are capable of providing a minimum of ±40mA of output current. With a minimum of ±40mA of output drive, the EL5160 is capable of driving 50Ω loads to both rails, making it an excellent choice for driving isolation transformers in telecommunications applications.

Driving Cables and Capacitive Loads

When used as a cable driver, double termination is always recommended for reflection-free performance. For those applications, the back-termination series resistor will decouple the EL5160, EL5161, EL5260, EL5261, and EL5360 from the cable and allow extensive capacitive drive. However, other applications may have high capacitive loads without a back-termination resistor. In these applications, a small series resistor (usually between 5Ω and 50Ω) can be placed in series with the output to eliminate most peaking. The gain resistor (R_G) can then be chosen to make up for any gain loss which may be created by this additional resistor at the output. In many cases it is also possible to simply increase the value of the feedback resistor (R_F) to reduce the peaking.

Current Limiting

The EL5160, EL5161, EL5260, EL5261, and EL5360 have no internal current-limiting circuitry. If the output is shorted, it is possible to exceed the Absolute Maximum Rating for output current or power dissipation, potentially resulting in the destruction of the device.

Power Dissipation

With the high output drive capability of the EL5160, EL5161, EL5260, EL5261, and EL5360, it is possible to exceed the +125°C Absolute Maximum junction temperature under certain very high load current conditions. Generally speaking when R_L falls below about 25Ω, it is important to calculate the maximum junction temperature (T_{JMAX}) for the application to determine if power supply voltages, load conditions, or package type need to be modified for the EL5160, EL5161, EL5260, EL5261, and EL5360 to remain in the safe operating area. These parameters are calculated as follows:

$$T_{JMAX} = T_{MAX} + (\theta_{JA} \times n \times PD_{MAX})$$

where:

- T_{MAX} = Maximum ambient temperature
- θ_{JA} = Thermal resistance of the package
- n = Number of amplifiers in the package
- PD_{MAX} = Maximum power dissipation of each amplifier in the package

PD_{MAX} for each amplifier can be calculated as follows:

$$PD_{MAX} = (2 \times V_S \times I_{SMAX}) + \left[(V_S - V_{OUTMAX}) \times \frac{V_{OUTMAX}}{R_L}\right]$$

where:

- V_S = Supply voltage
- I_{SMAX} = Maximum supply current of 0.85mA
- V_{OUTMAX} = Maximum output voltage (required)
- R_L = Load resistance

Typical Application Circuits

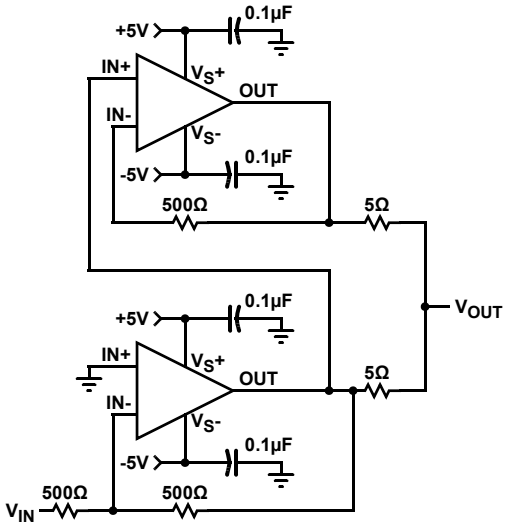

FIGURE 21. INVERTING 200mA OUTPUT CURRENT DISTRIBUTION AMPLIFIER

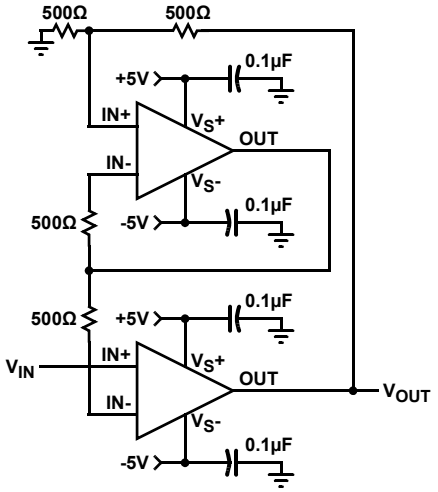

FIGURE 22. FAST-SETTLING PRECISION AMPLIFIER

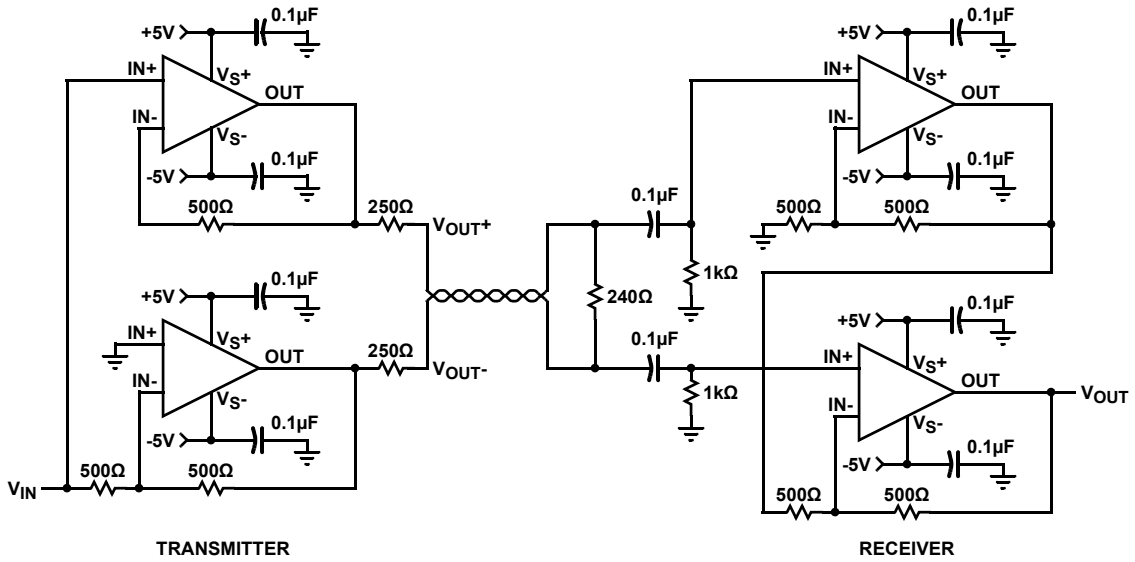

FIGURE 23. DIFFERENTIAL LINE DRIVER/RECEIVER

Revision History

The revision history provided is for informational purposes only and is believed to be accurate, but not warranted. Please go to the web to make sure that you have the latest revision.

DATE	REVISION	CHANGE
August 11, 2015	FN7387.11	Updated Ordering Information table on page 2. Added Revision History and About Intersil sections.

About Intersil

Intersil Corporation is a leading provider of innovative power management and precision analog solutions. The company's products address some of the largest markets within the industrial and infrastructure, mobile computing and high-end consumer markets.

For the most updated datasheet, application notes, related documentation and related parts, please see the respective product information page found at www.intersil.com.

You may report errors or suggestions for improving this datasheet by visiting www.intersil.com/ask.

Reliability reports are also available from our website at www.intersil.com/support

Small Outline Package Family (SO)

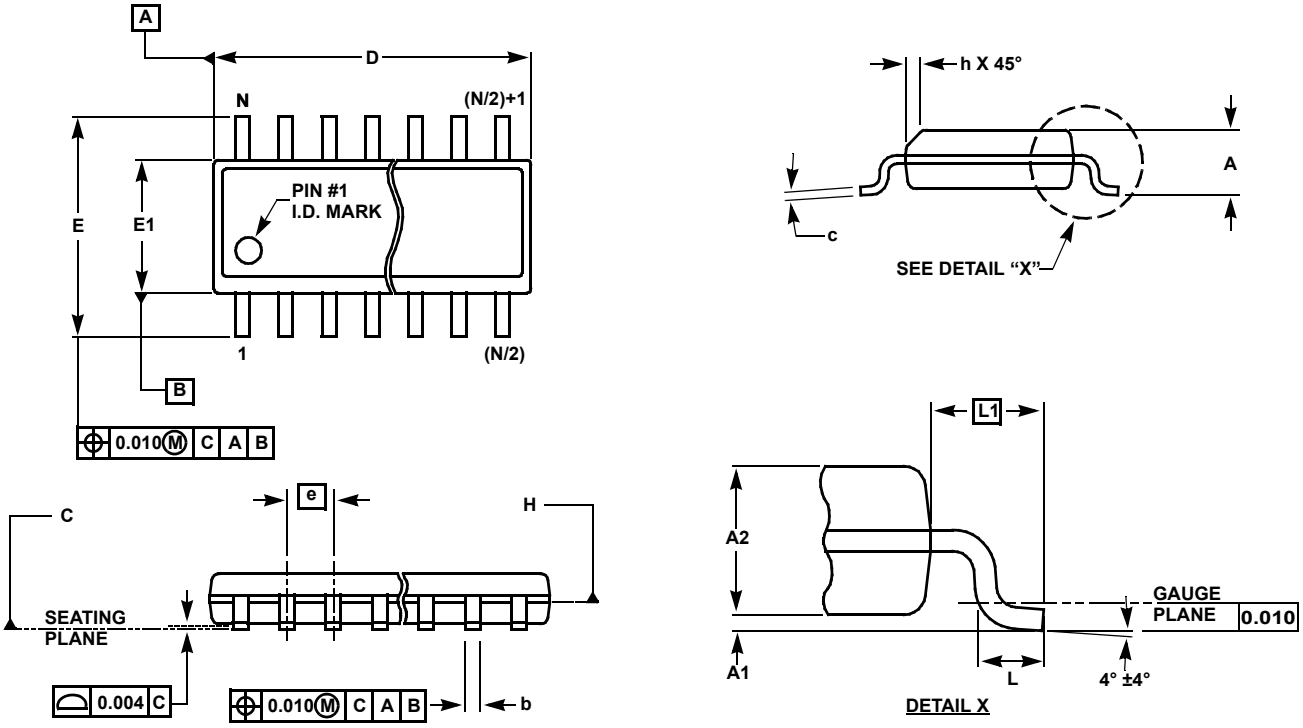

MDP0027

SMALL OUTLINE PACKAGE FAMILY (SO)

SYMBOL	INCHES							TOLERANCE	NOTES
	SO-8	SO-14	SO16 (0.150")	SO16 (0.300") (SOL-16)	SO20 (SOL-20)	SO24 (SOL-24)	SO28 (SOL-28)		
A	0.068	0.068	0.068	0.104	0.104	0.104	0.104	MAX	-
A1	0.006	0.006	0.006	0.007	0.007	0.007	0.007	±0.003	-
A2	0.057	0.057	0.057	0.092	0.092	0.092	0.092	±0.002	-
b	0.017	0.017	0.017	0.017	0.017	0.017	0.017	±0.003	-
c	0.009	0.009	0.009	0.011	0.011	0.011	0.011	±0.001	-
D	0.193	0.341	0.390	0.406	0.504	0.606	0.704	±0.004	1, 3
E	0.236	0.236	0.236	0.406	0.406	0.406	0.406	±0.008	-
E1	0.154	0.154	0.154	0.295	0.295	0.295	0.295	±0.004	2, 3
e	0.050	0.050	0.050	0.050	0.050	0.050	0.050	Basic	-
L	0.025	0.025	0.025	0.030	0.030	0.030	0.030	±0.009	-
L1	0.041	0.041	0.041	0.056	0.056	0.056	0.056	Basic	-
h	0.013	0.013	0.013	0.020	0.020	0.020	0.020	Reference	-
N	8	14	16	16	20	24	28	Reference	-

Rev. M 2/07

NOTES:

1. Plastic or metal protrusions of 0.006" maximum per side are not included.
2. Plastic interlead protrusions of 0.010" maximum per side are not included.
3. Dimensions "D" and "E1" are measured at Datum Plane "H".
4. Dimensioning and tolerancing per ASME Y14.5M-1994

Package Outline Drawing

P6.064A

6 LEAD SMALL OUTLINE TRANSISTOR PLASTIC PACKAGE
Rev 0, 2/10

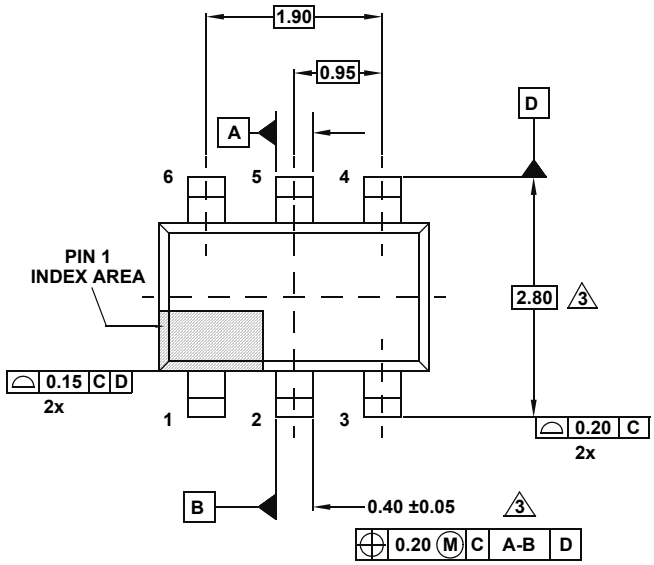

TOP VIEW

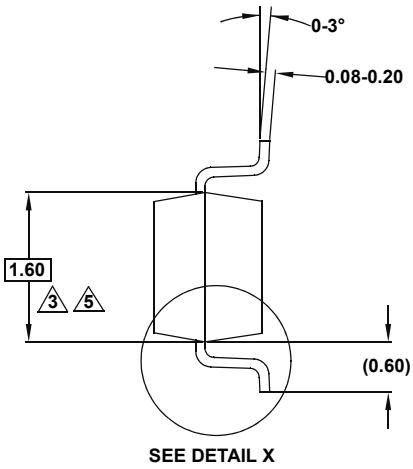

END VIEW

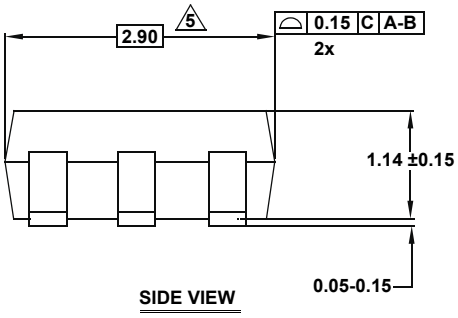

SIDE VIEW

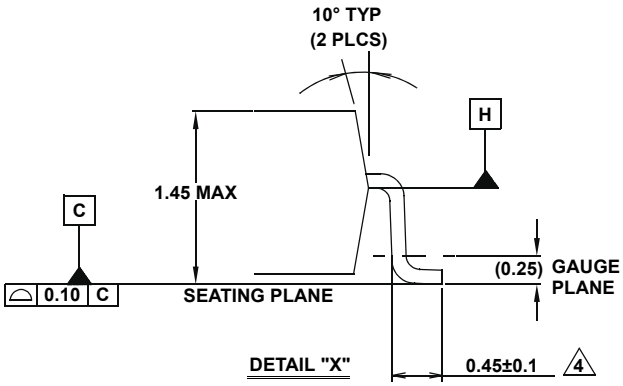

DETAIL "X"

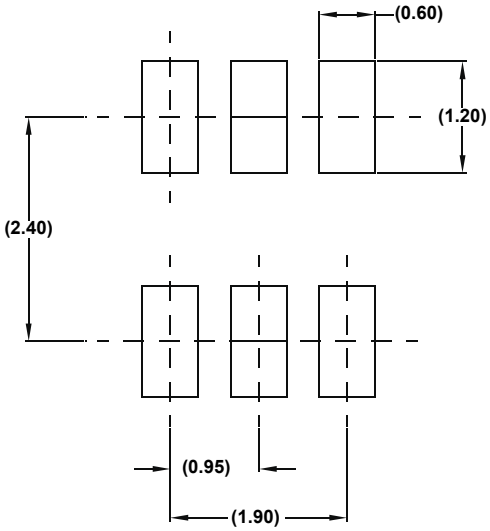

TYPICAL RECOMMENDED LAND PATTERN

NOTES:

1. Dimensions are in millimeters.
   Dimensions in ( ) for Reference Only.
2. Dimensioning and tolerancing conform to ASME Y14.5M-1994.
3. Dimension is exclusive of mold flash, protrusions or gate burrs.
4. Foot length is measured at reference to guage plane.
5. This dimension is measured at Datum "H".
6. Package conforms to JEDEC MO-178AA.

Package Outline Drawing

P5.064A

5 LEAD SMALL OUTLINE TRANSISTOR PLASTIC PACKAGE
Rev 0, 2/10

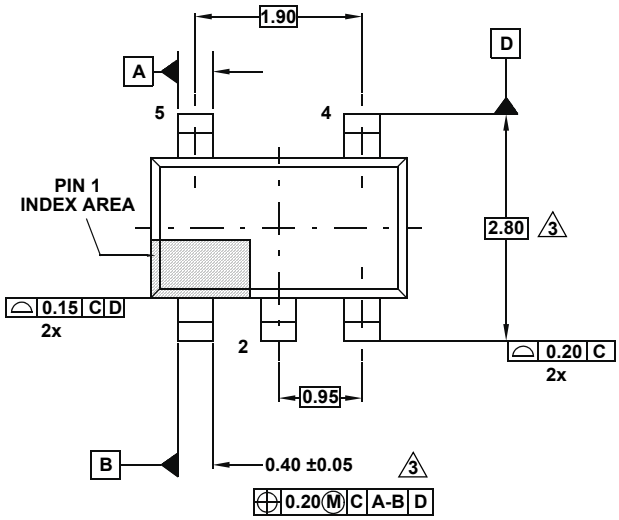

TOP VIEW

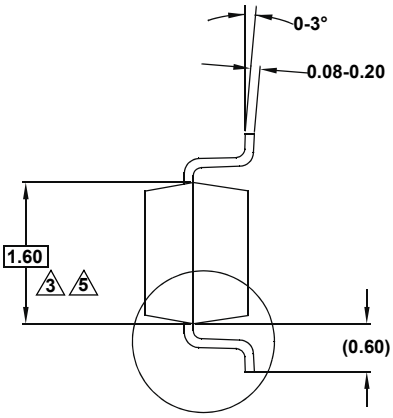

END VIEW

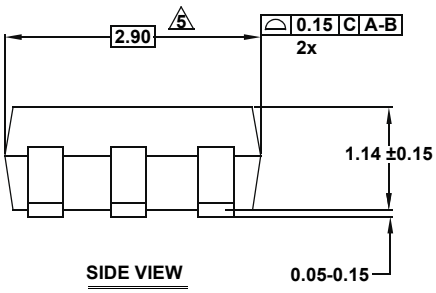

SIDE VIEW

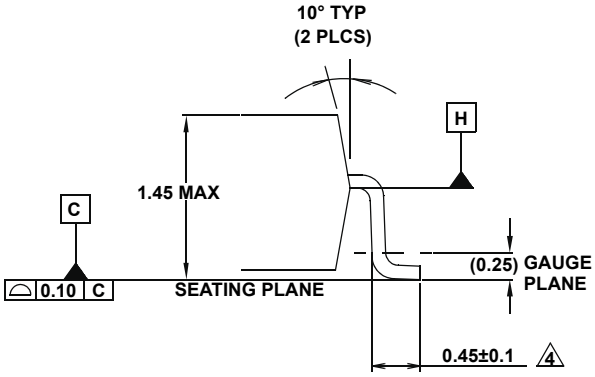

DETAIL "X"

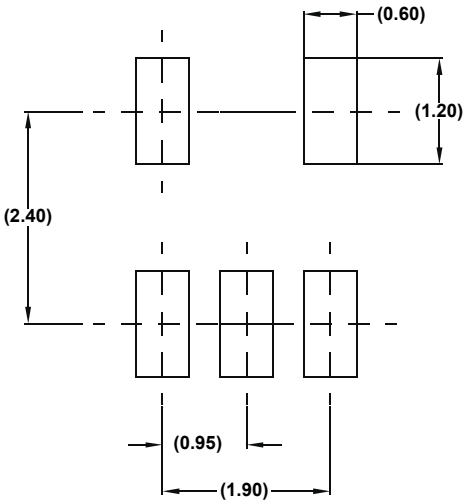

TYPICAL RECOMMENDED LAND PATTERN

NOTES:

1. Dimensions are in millimeters.
   Dimensions in ( ) for Reference Only.
2. Dimensioning and tolerancing conform to ASME Y14.5M-1994.
3. Dimension is exclusive of mold flash, protrusions or gate burrs.
4. Foot length is measured at reference to guage plane.
5. This dimension is measured at Datum “H”.
6. Package conforms to JEDEC MO-178AA.

Package Outline Drawing

M8.15E

8 LEAD NARROW BODY SMALL OUTLINE PLASTIC PACKAGE
Rev 0, 08/09

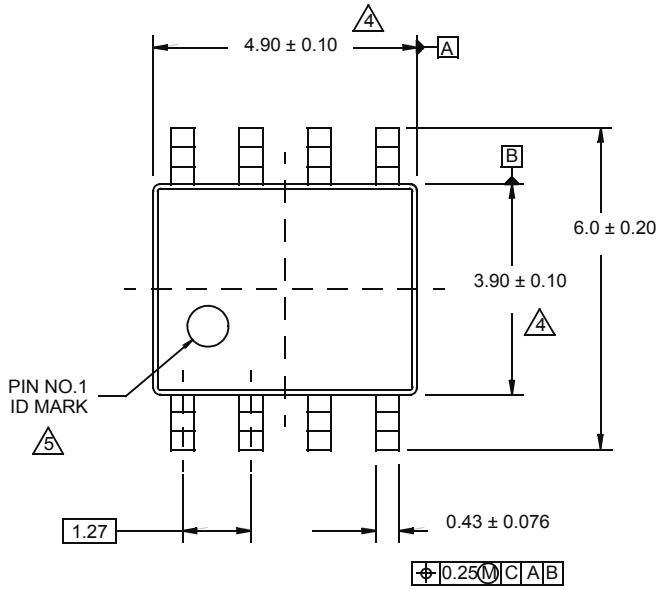

TOP VIEW

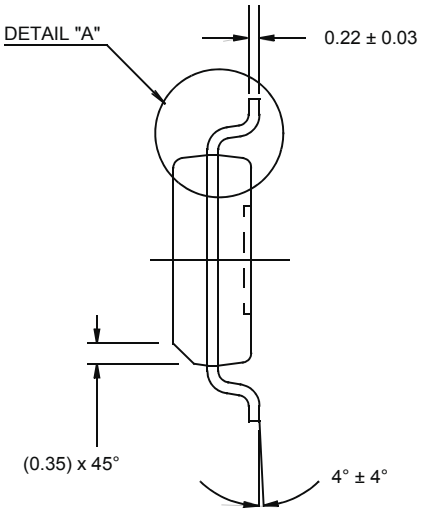

SIDE VIEW “B”

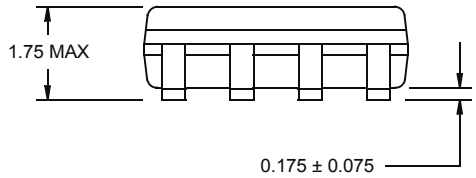

SIDE VIEW “A

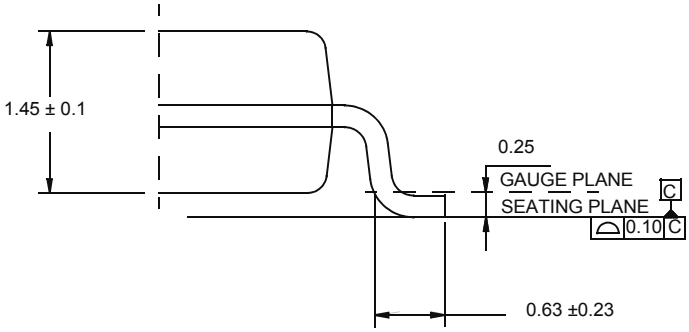

DETAIL "A"

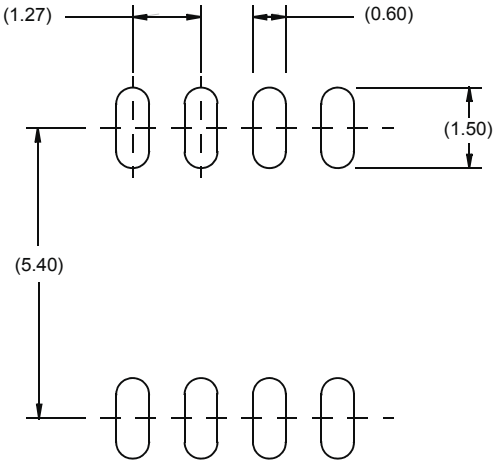

TYPICAL RECOMMENDED LAND PATTERN

NOTES:

1. Dimensions are in millimeters.
   Dimensions in ( ) for Reference Only.
2. Dimensioning and tolerancing conform to AMSE Y14.5m-1994.
3. Unless otherwise specified, tolerance : Decimal ± 0.05
4. Dimension does not include interlead flash or protrusions.
   Interlead flash or protrusions shall not exceed 0.25mm per side.
5. The pin #1 identifier may be either a mold or mark feature.
6. Reference to JEDEC MS-012.

Package Outline Drawing

M10.118A (JEDEC MO-187-BA)

10 LEAD MINI SMALL OUTLINE PLASTIC PACKAGE (MSOP)
Rev 0, 9/09

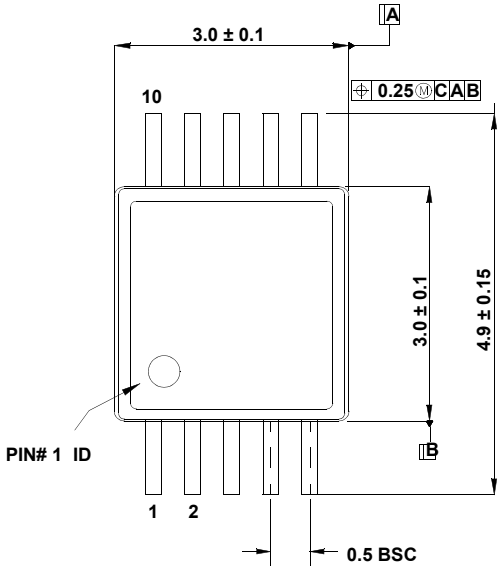

TOP VIEW

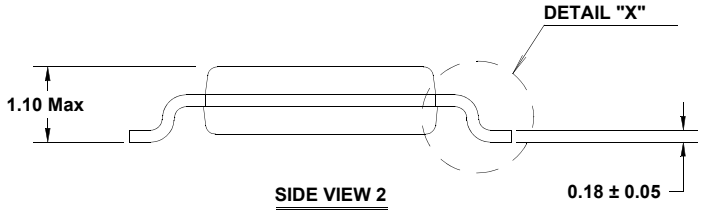

SIDE VIEW 2

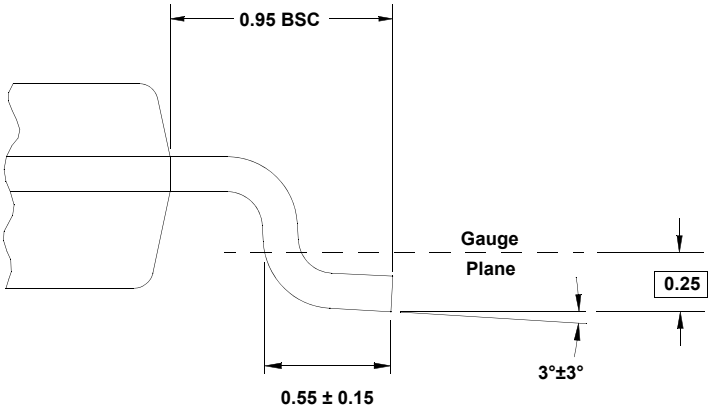

DETAIL "X"

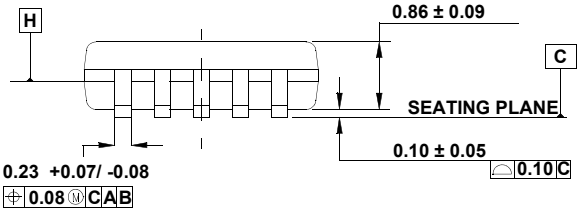

SIDE VIEW 1

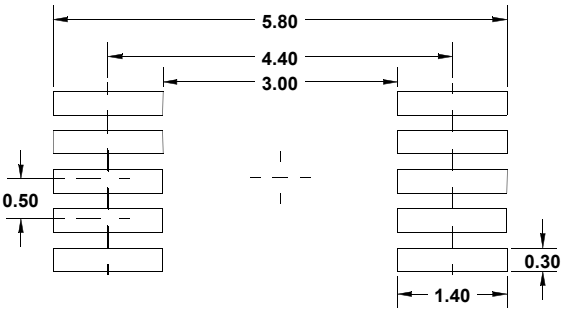

TYPICAL RECOMMENDED LAND PATTERN

NOTES:

1. Dimensions are in millimeters.
2. Dimensioning and tolerancing conform to AMSE Y14.5m-1994.
3. Plastic or metal protrusions of 0.15mm max per side are not included.
4. Plastic interlead protrusions of 0.25mm max per side are not included.
5. Dimensions “D” and “E1” are measured at Datum Plane “H”.
6. This replaces existing drawing # MDP0043 MSOP10L.

Quarter Size Outline Plastic Packages Family (QSOP)

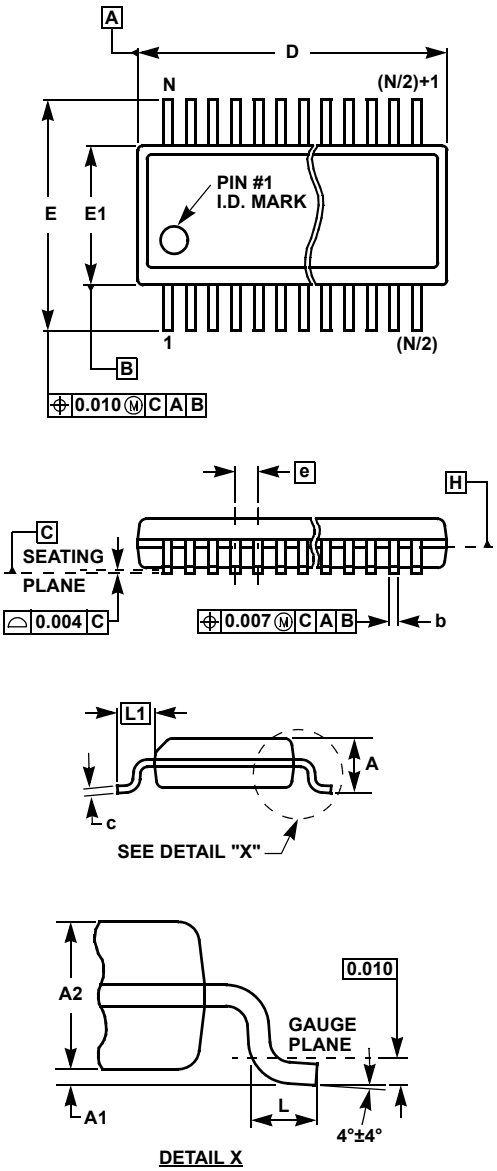

MDP0040

QUARTER SIZE OUTLINE PLASTIC PACKAGES FAMILY

SYMBOL	INCHES			TOLERANCE	NOTES
	QSOP16	QSOP24	QSOP28		
A	0.068	0.068	0.068	Max.	-
A1	0.006	0.006	0.006	±0.002	-
A2	0.056	0.056	0.056	±0.004	-
b	0.010	0.010	0.010	±0.002	-
c	0.008	0.008	0.008	±0.001	-
D	0.193	0.341	0.390	±0.004	1, 3
E	0.236	0.236	0.236	±0.008	-
E1	0.154	0.154	0.154	±0.004	2, 3
e	0.025	0.025	0.025	Basic	-
L	0.025	0.025	0.025	±0.009	-
L1	0.041	0.041	0.041	Basic	-
N	16	24	28	Reference	-

Rev. F 2/07

NOTES:

1. Plastic or metal protrusions of 0.006” maximum per side are not included.
2. Plastic interlead protrusions of 0.010” maximum per side are not included.
3. Dimensions “D” and “E1” are measured at Datum Plane “H”.
4. Dimensioning and tolerancing per ASME Y14.5M-1994.

© Copyright Intersil Americas LLC 2004-2015. All Rights Reserved.
All trademarks and registered trademarks are the property of their respective owners.

For additional products, see www.intersil.com/en/products.html

Intersil products are manufactured, assembled and tested utilizing ISO9001 quality systems as noted in the quality certifications found at www.intersil.com/en/support/qualandreliability.html

Intersil products are sold by description only. Intersil may modify the circuit design and/or specifications of products at any time without notice, provided that such modification does not, in Intersil's sole judgment, affect the form, fit or function of the product. Accordingly, the reader is cautioned to verify that datasheets are current before placing orders. Information furnished by Intersil is believed to be accurate and reliable. However, no responsibility is assumed by Intersil or its subsidiaries for its use; nor for any infringements of patents or other rights of third parties which may result from its use. No license is granted by implication or otherwise under any patent or patent rights of Intersil or its subsidiaries.

For information regarding Intersil Corporation and its products, see www.intersil.com