DS1023
8-Bit Programmable Timing Element

www.maxim-ic.com

FEATURES

- Step sizes of 0.25 ns, 0.5 ns, 1 ns, 2 ns, 5 ns
- On-chip reference delay
- Configurable as delay line, pulse width modulator, or free-running oscillator
- Can delay clocks by a full period or more
- Guaranteed monotonicity
- Parallel or serial programming
- Single 5V supply
- 16-pin DIP or SOIC package

PIN ASSIGNMENT

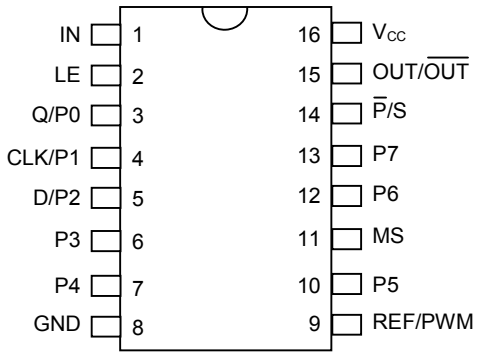

DS1023 300-mil DIP
DS1023S 300-mil SOIC

PIN DESCRIPTION

IN	- Input
P0/Q	- Parallel Input P0 (parallel mode)
	- Serial Data Output (serial mode)
P1/CLK	- Parallel Input P1 (parallel mode)
	- Serial Input Clock (serial mode)
P2/D	- Parallel Input P2 (parallel mode)
	- Serial Data Input (serial mode)
P3 - P7	- Remaining Parallel Inputs
GND	- Ground
OUT/$\overline{\text{OUT}}$	- Output
REF/PWM	- Reference or PWM Output
$\overline{\text{P}}$/S	- Parallel / Serial Programming Select
MS	- Output Mode Select
LE	- Input Latch Enable
V_{CC}	- Supply Voltage

DESCRIPTION

The DS1023 is an 8-bit programmable delay line similar in function to the DS1020/DS1021.

Additional features have been added to extend the range of applications:

The internal delay line architecture has been revised to allow clock signals to be delayed by up to a full period or more. Combined with an on-chip reference delay (to offset the inherent or “step zero” delay of the device) clock phase can now be varied over the full 0-360 degree range.

On-chip gating is provided to allow the device to provide a pulse width modulated output, triggered by the input with duration set by the programmed value.

Alternatively the output signal may be inverted on chip, allowing the device to perform as a free-running oscillator if the output is (externally) connected to the input.

PROGRAMMING

The device programming is identical to the DS1020/DS1021. Note, however, that the serial clock and data pins are shared with three of the parallel input pins.

The $\overline{P}$/S pin controls the same function as "Mode Select" on the DS1020/DS1021 (but with reversed polarity). A low logic level on this pin enables the parallel programming mode. LE must be at a high logic level to alter the programmed value; when LE is taken low the data is latched internally and the parallel data inputs may be altered without affecting the programmed value. This is useful for multiplexed bus applications. For hard-wired applications LE should be tied to a high logic level.

When $\overline{P}$/S is high serial programming is enabled. LE must be held high to enable loading or reading of the internal register, during which time the delay is determined by the previously programmed value. Data is clocked in MSB to LSB order on the rising edge of the CLK input. Data transfer ends and the new value is activated when LE is taken low.

PARALLEL MODE ($\overline{P}$/S = 0)

In the PARALLEL programming mode, the output of the DS1023 will reproduce the logic state of the input after a delay determined by the state of the eight program input pins P0 - P7. The parallel inputs can be programmed using DC levels or computer-generated data. For infrequent modification of the delay value, jumpers may be used to connect the input pins to V_{CC} or ground. For applications requiring frequent timing adjustment, DIP switches may be used. The latch enable pin (LE) must be at a logic 1 in hardwired implementations.

Maximum flexibility is obtained when the eight parallel programming bits are set using computer-generated data. When the data setup (t_{DSE}) and data hold (t_{DHE}) requirements are observed, the enable pin can be used to latch data supplied on an 8-bit bus. Latch enable must be held at a logic 1 if it is not used to latch the data. After each change in delay value, a settling time (t_{EDV} or t_{PDV}) is required before input logic levels are accurately delayed.

SERIAL MODE ($\overline{P}$/S = 1)

In the SERIAL programming mode, the output of the DS1023 will reproduce the logic state of the input after a delay time determined by an 8-bit value clocked into serial port D. While observing data setup (t_{DSC}) and data hold (t_{DHC}) requirements, timing data is loaded in MSB-to-LSB order by the rising edge of the serial clock (CLK). The latch enable pin (LE) must be at a logic 1 to load or read the internal 8-bit input register, during which time the delay is determined by the last value activated. Data transfer ends and the new delay value is activated when latch enable (LE) returns to a logic 0. After each change, a settling time (t_{EDV}) is required before the delay is accurate.

As timing values are shifted into the serial data input (D), the previous contents of the 8-bit input register are shifted out of the serial output pin (Q) in MSB-to-LSB order. By connecting the serial output of one DS1023 to the serial input of a second DS1023, multiple devices can be daisy-chained (cascaded) for programming purposes (Figure 1). The total number of serial bits must be eight times the number of units daisy-chained and each group of 8 bits must be sent in MSB-to-LSB order.

Applications can read the setting of the DS1023 Delay Line by connecting the serial output pin (Q) to the serial input (D) through a resistor with a value of 1 to 10 kohms (Figure 2). Since the read process is destructive, the resistor restores the value read and provides isolation when writing to the device. The resistor must connect the serial output (Q) of the last device to the serial input (D) of the first device of a daisy chain (Figure 1). For serial readout with automatic restoration through a resistor, the device used to write serial data must go to a high impedance state.

To initiate a serial read, latch enable (LE) is taken to a logic 1 while serial clock (CLK) is at a logic 0. After a waiting time (t_{EQV}), bit 7 (MSB) appears on the serial output (Q). On the first rising (0 --> 1) transition of the serial clock (CLK), bit 7 (MSB) is rewritten and bit 6 appears on the output after a time t_{CQV}. To restore the input register to its original state, this clocking process must be repeated eight times. In the case of a daisy chain, the process must be repeated eight times per package. If the value read is restored before latch enable (LE) is returned to logic 0, no settling time (t_{EDV}) is required and the programmed delay remains unchanged.

Since the DS1023 is a CMOS design, unused input pins (P3 - P7) must be connected to well-defined logic levels; they must not be allowed to float. Serial output Q/P0 should be allowed to float if unused.

CASCADING MULTIPLE DEVICES (DAISY CHAIN) Figure 1

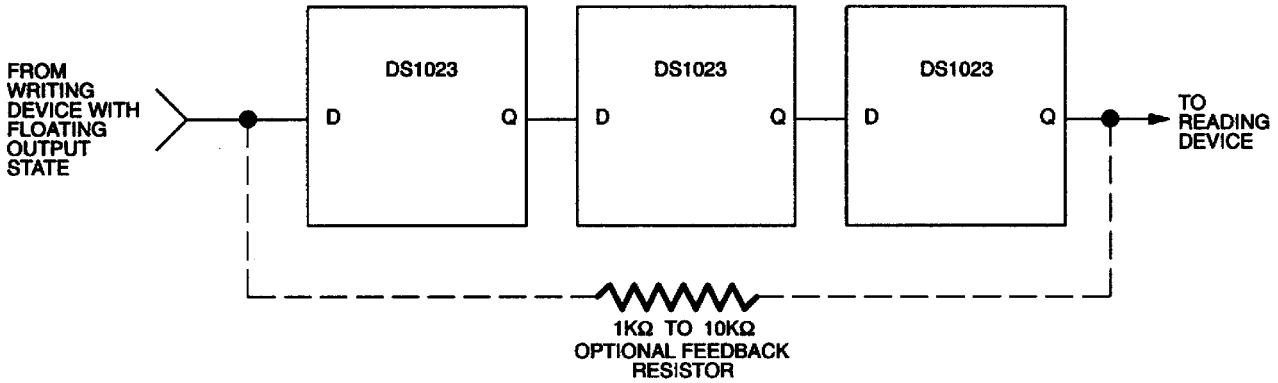

SERIAL READOUT Figure 2

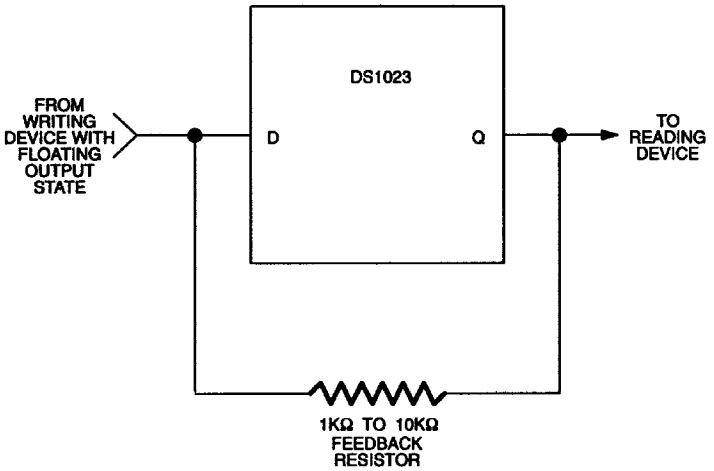

REFERENCE DELAY

In all delay lines there is an inherent, or “step zero”, delay caused by the propagation delay through the input and output buffers. In this device the step zero delay can be quite large compared to the delay step size. To simplify system design a reference delay has been included on chip which may be used to compensate for the step zero delay. In practice this means that if the device is supplied with a clock, for example, the minimum programmed output delay is effectively zero with respect to the reference delay.

For highest accuracy it is strongly recommended that the reference delay is used. Variations in input voltage levels and transition times can significantly alter the measured delay from input to output. This effect is totally removed if the reference delay output is used. Furthermore, adverse effects on step zero delay caused by process temperature coefficients are also cancelled out.

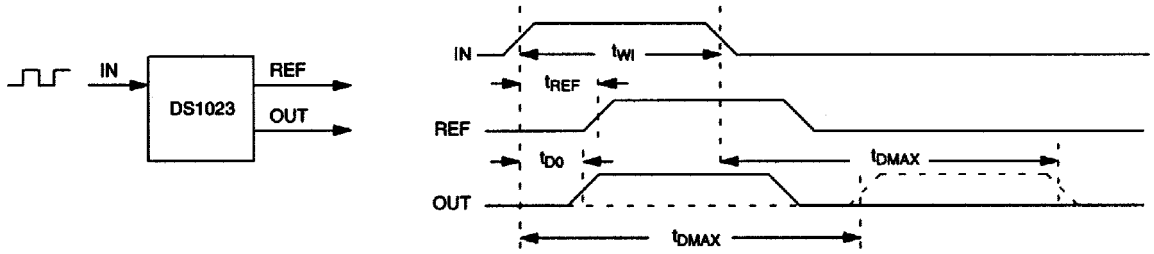

INPUT PULSE DURATION

The internal architecture of the DS1023 allows the output delay time to be considerably longer than the input pulse width (see ac specifications). This feature is useful in many applications, in particular clock phase control where delays up to and beyond one full clock period can be achieved.

MODE SELECT

The DS1023 has four possible output functions but only two output pins. The functionality of the two output pins is determined by the Mode Select (MS) pin.

MS = 0 Figure 3

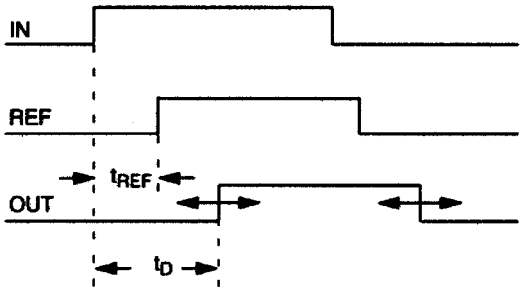

Output Function	**Name**	**Pin Number**
Reference Output	REF	9
Delayed Output	OUT	15

OUT is a copy of the input waveform that is delayed by an amount set by the programmed values (Table 1). A programmed value of zero will still result in a non-zero delay as indicated in the Step Zero delay specification. The signal on OUT is the same polarity as the input.

REF is a fixed reference delay. It also is a copy of the input waveform but the delay interval is fixed to a value approximately equal to the Step Zero Value of the device (as shown in the Reference Delay specification). In fact the device is trimmed to ensure that the Reference Delay is always slightly longer than the Step Zero Value (by 1.5 ns typically).

MS = 1 Figure 4

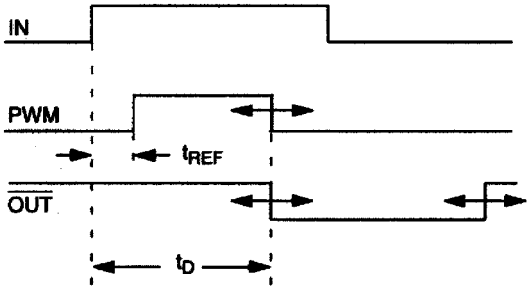

Output Function	**Name**	**Pin Number**
Pulse Width Modulated Output	PWM	9
Delayed and Inverted Output	$\overline{OUT}$	15

PWM is an output triggered by the rising edge of the input waveform. After a time interval approximately equal to the Step Zero delay of the device the PWM output will go high. The output will return to a low level after a time interval determined by the programmed values (Table 1). Hence output pulse widths can be obtained from (nearly) zero to the full delay range of the device. In practice the minimum output pulse width is limited by the response time of the device to approximately 5ns. Programmed values less than this will result in degradation of the output high level voltage until ultimately no discernible output pulse is produced. The frequency/repetition rate of the output is determined by the input frequency. The input pulse width can be shorter than the output pulse width, and is limited only by the minimum input pulse width specification. The PWM function is not “re-triggerable”, subsequent input trigger pulses should not be present until the output has returned to a low level.

$\overline{OUT}$ is an inverted copy of the input waveform that is delayed by an amount set by the programmed values (Table 1). A programmed value of zero will still result in a non-zero delay as indicated in the Step Zero delay specification. The $\overline{OUT}$ pin may also be externally connected to the input pin to produce a free-running oscillator. The frequency of oscillation is determined by the programmed delay value of the device (see Table 2).

FUNCTIONAL BLOCK DIAGRAM Figure 5

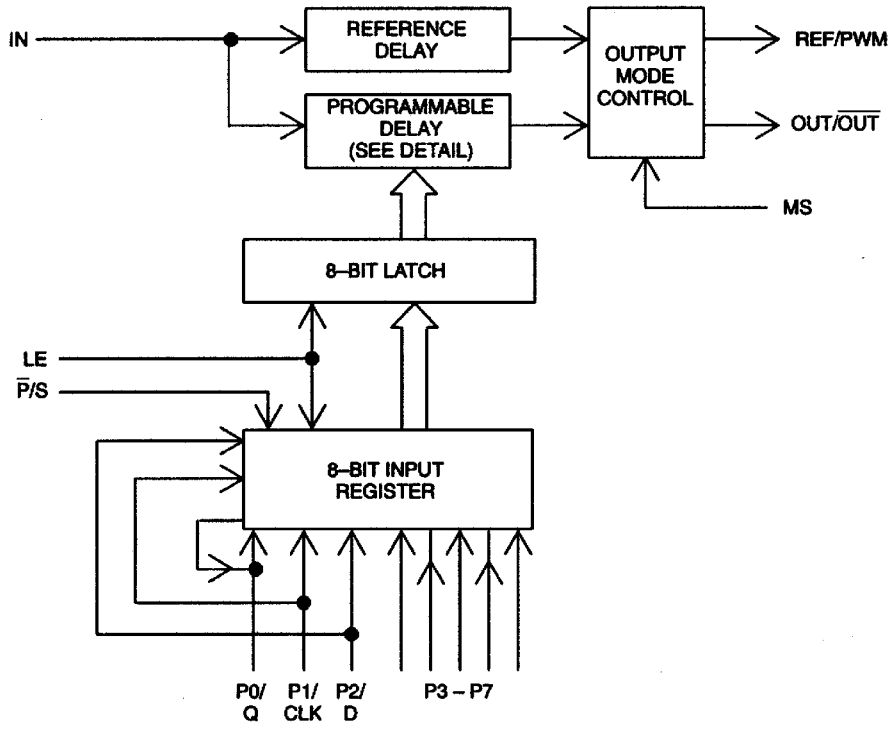

DELAY LINE DETAIL (CONCEPTUAL) - DS1023-200, DS1023-500 Figure 6

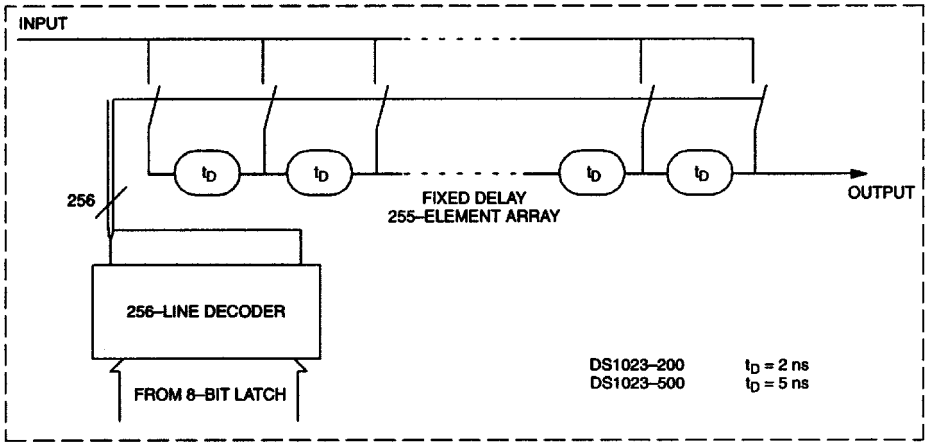

DELAY LINE DETAIL (CONCEPTUAL) - DS1023-25, DS1023-50, DS1023-100

Figure 7

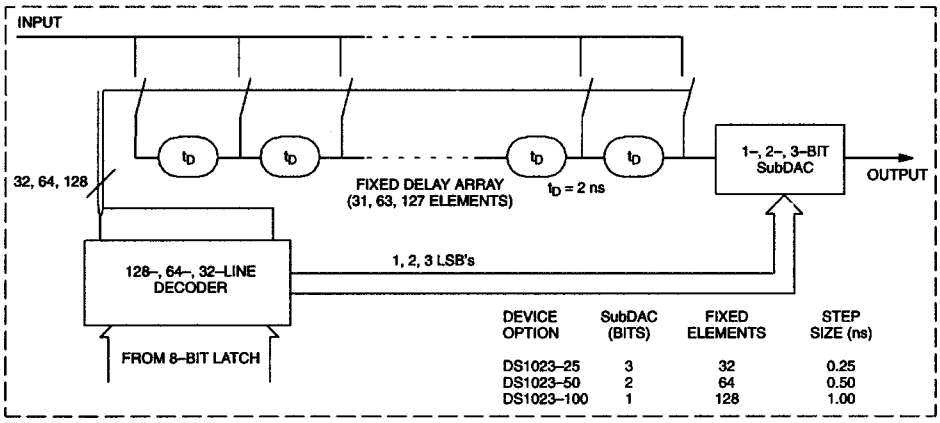

PART NUMBER TABLE Table 1

DELAYS RANGES AND TOLERANCE (all times measured in ns)					
PART NUMBER	STEP SIZE	MAX. DELAY TIME (1)/ MAX. OUTPUT PULSE WIDTH (2)	MAXIMUM DEVIATION (3)	MAXIMUM I/P FREQ	MINIMUM I/P PULSE WIDTH
DS1023-25	0.25	63.75	±1	25 MHz	20
DS1023-50	0.50	127.5	±2	25 MHz	20
DS1023-100	1.0	255	±4	25 MHz	20
DS1023-200	2.0	510	±8	25 MHz	20
DS1023-500	5.0	1275	±20	10 MHz	50

1. In "Normal" mode (MS=0). Measured with respect to REF output. The minimum delay time is zero (or less, by 1.5 ns typically)

2. In PWM mode (MS=1). The minimum output pulse width for reliable operation is 5 ns; programmed values less than this may produce reduced output voltage levels or no output at all.

3. This is the deviation from a straight line drawn between the step zero value and the maximum programmed delay time.

OSCILLATOR CONFIGURATION Table 2

PART NUMBER	STEP SIZE (4)	MINIMUM O/P FREQUENCY (5)	MAXIMUM O/P FREQUENCY (5)
DS1023-25	0.5	6.6 MHz	22 MHz
DS1023-50	1.0	3.6 MHz	22 MHz
DS1023-100	2.0	1.9 MHz	22 MHz
DS1023-200	4.0	0.98 MHz	22 MHz
DS1023-500	10.0	0.4 MHz	22 MHz

4. Step size in output period (in ns).

5. Maximum output frequency depends on the actual step zero delay value, worst case values are shown in the table. The output period is given by: 2 * t_D where: t_D = absolute delay value.

DALLAS SEMICONDUCTOR TEST CIRCUIT Figure 8

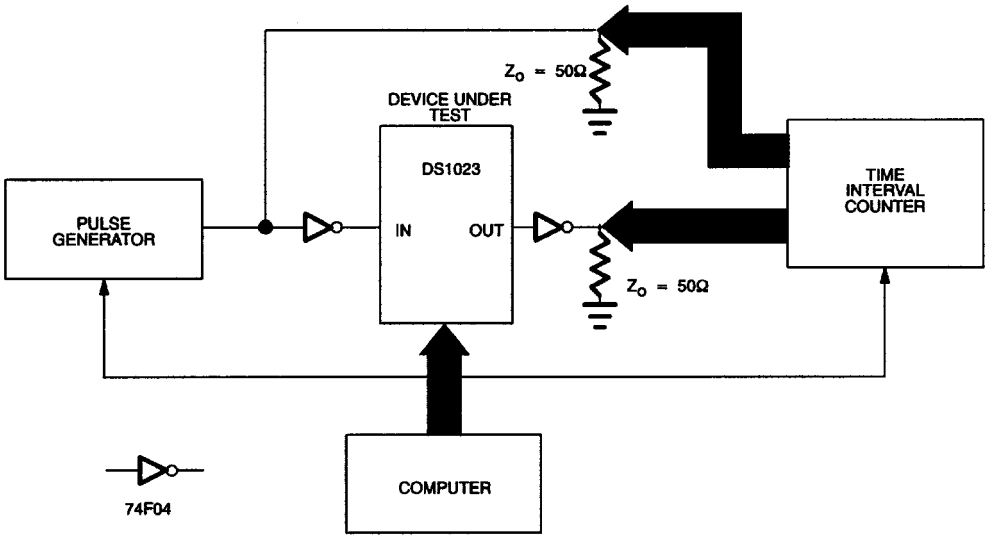

TEST SETUP DESCRIPTION

Figure 8 illustrates the hardware configuration used for measuring the timing parameters of the DS1023. The input waveform is produced by a precision pulse generator under software control. Time delays are measured by a time interval counter (20 ps resolution) connected to the output. The DS1023 serial and parallel ports are controlled by interfaces to a central computer. All measurements are fully automated with each instrument controlled by the computer over an IEEE 488 bus.

TEST CONDITIONS

INPUT:

Ambient Temperature:	25°C ± 3°C
Supply Voltage (V_{CC}):	5.0V ± 0.1V
Input Pulse:	High = 3.0V ± 0.1V
	Low = 0.0V ± 0.1V
Source Impedance:	50 ohms max.
Rise and Fall Time:	3.0 ns max. (measured between 0.6V and 2.4V)
Pulse Width:	500 ns
Period:	1 μs

NOTE: Above conditions are for test only and do not restrict the operation of the device under other data sheet conditions.

OUTPUT:

Output is loaded with a 74F04. Delay is measured between the 1.5V level of the rising edge of the input signal and the 1.5V level of the corresponding edge of the output.

ABSOLUTE MAXIMUM RATINGS*

Voltage on Any Pin	-1.0V to +7.0V
Operating Temperature Range	0°C to 70°C
Storage Temperature	-55°C to +125°C
Soldering Temperature	260°C for 10 seconds
Short Circuit Output Current	50 mA for 1 second

* This is a stress rating only and functional operation of the device at these or any other conditions above those indicated in the operation sections of this specification is not implied. Exposure to absolute maximum rating conditions for extended periods of time may affect reliability.

DC ELECTRICAL CHARACTERISTICS (0°C to 70°C; V_{CC} = 5V ± 5%)

PARAMETER	SYMBOL	MIN	TYP	MAX	UNITS	NOTES
Supply Voltage	V_{CC}	4.75	5	5.25	V	
High Level Input Voltage	V_{IH}	2		V_{CC} +0.5	V	
Low Level Input Voltage	V_{IL}	-0.5		0.8	V	
Input Leakage Current ($0<V_I<V_{CC}$)	I_I	-1		+1	µA	
Active Current	I_{CC}		30	60	mA	
High Level Output Current (V_{CC} = Min, V_{OH} = 2.7V)	I_{OH}			-1	mA	
Low Level Output Current (V_{CC} = Min, V_{OL} = 0.5V)						
-Q output	I_{OL}	4			mA	
-All other outputs	I_{OL}	8			mA	

AC ELECTRICAL CHARACTERISTICS - CONTROL/INTERFACE SPECIFICATIONS ALL SPEED OPTIONS (T_A= 0°C to 70°C; V_{CC}= 5V ± 5%)

PARAMETER	SYMBOL	MIN	TYP	MAX	UNITS	NOTES
Serial Clock Frequency	f_{CLK}			10	MHz	
Input Pulse Width (LE, CLK)	t_W	50			ns	
Data Setup to Clock	t_{DSC}	30			ns	
Data Hold from Clock	t_{DHC}	0			ns	
Data Setup to Enable	t_{DSE}	30			ns	
Data Hold from Enable	t_{DHE}	0			ns	
Enable Setup to Clock	t_{ES}	0			ns	
Enable Hold from Clock	t_{EH}	30			ns	
LE to Q Valid	t_{EQV}			50	ns	
LE to Q Hi-Z	t_{EQZ}	0		50	ns	
CLK to Q Valid	t_{CQV}			50	ns	
CLK to Q Invalid	t_{CQX}	0			ns	
Parallel Input to Delay Valid	t_{PDV}			500	ns	
Parallel Input to Delay Invalid	t_{PDX}	0			ns	
LE to Delay Valid	t_{EDV}			500	ns	
LE to Delay Invalid	t_{EDX}	0			ns	
Power Up Time	t_{PU}			100	ms	

TIMING DIAGRAM: SILICON DELAY LINE Figure 9

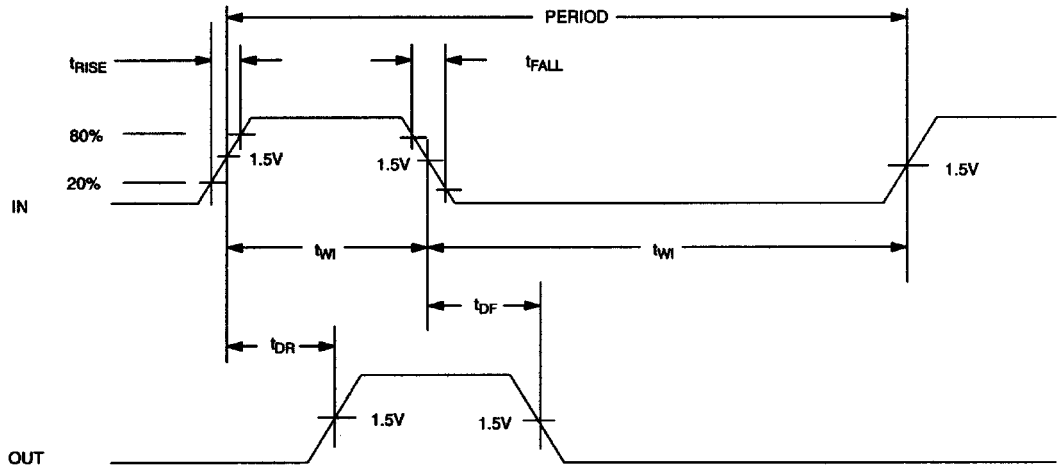

AC ELECTRICAL CHARACTERISTICS - DS1023-25 Delay Specifications (T_A = 0°C to 70°C; V_{CC} = 5V ± 5%)

PARAMETER	SYMBOL	MIN	TYP	MAX	UNITS	NOTES
Step Zero Delay						
-absolute	t_{D0}		16.5	22	ns	1, 13
-wrt REF	t_{DREF0}	-2	-1.5	0	ns	2, 14
Reference Delay	t_{REF}		18	22	ns	3, 13
Delay Step Size	t_{STEP}	0	0.25	0.75	ns	4, 16
Maximum Delay						
-absolute	t_{DMAX}	75	80	89	ns	5, 13
-wrt REF	t_{DREF}	60	63.75	67.5	ns	6, 14
Integral Non-linearity (deviation from straight line)	t_{err}	-1	0	+1	ns	7
$\overline{OUT}$ Delta Delay	t_{INV0}	0	1	2	ns	8
IN High to PWM High	t_{PWM0}		16.5	22	ns	9, 13
Minimum PWM Output Pulse Width	t_{PWM}	5			ns	10
Minimum Input Pulse Width	t_{WI}	20			ns	11
Minimum Input Period		40			ns	12
Input Rise and Fall Times	t_r, t_f	0		1	µs	15

AC ELECTRICAL CHARACTERISTICS – DS1023-50 Delay Specifications (T_A= 0°C to 70°C; V_{CC} = 5V ± 5%)

PARAMETER	SYMBOL	MIN	TYP	MAX	UNITS	NOTES
Step Zero Delay -absolute -wrt REF	 t_{D0} t_{DREF0}	 -2	 16.5 -1.5	 22 0	 ns ns	 1, 13 2, 14
Reference Delay	t_{REF}		18	22	ns	3, 13
Delay Step Size	t_{STEP}	0	0.5	1.5	ns	4, 16
Maximum Delay -absolute -wrt REF	 t_{DMAX} t_{DREF}	 139 123	 144 127.5	 154 132	 ns ns	 5, 13 6, 14
Integral Non-linearity (deviation from straight line)	t_{err}	-2	0	+2	ns	7
$\overline{OUT}$ Delta Delay	t_{INV0}	0	1	2	ns	8
IN High to PWM High	t_{PWM0}		16.5	22	ns	9, 13
Minimum PWM Output Pulse Width	t_{PWM}	5			ns	10
Minimum Input Pulse Width	t_{WI}	20			ns	11
Minimum Input Period		40			ns	12
Input Rise and Fall Times	t_r, t_f	0		1	µs	15

AC ELECTRICAL CHARACTERISTICS – DS1023-100 Delay Specifications (T_A = 0°C – 70°C; V_{CC} = 5V ± 5%)

PARAMETER	SYMBOL	MIN	TYP	MAX	UNITS	NOTES
Step Zero Delay -absolute -wrt REF	 t_{D0} t_{DREF0}	 -2	 16.5 -1.5	 22 0	 ns ns	 1, 13 2, 14
Reference Delay	t_{REF}		18	22	ns	3, 13
Delay Step Size	t_{STEP}	0	1	1.5	ns	4, 16
Maximum Delay -absolute -wrt REF	 t_{DMAX} t_{DREF}	 262 247	 272 255	 285 263	 ns ns	 5, 13 6, 14
Integral Non-linearity (deviation from straight line)	t_{err}	-4	0	+4	ns	7
$\overline{OUT}$ Delta Delay	t_{INV0}	0	1	2	ns	8
IN High to PWM High	t_{PWM0}		16.5	22	ns	9, 13
Minimum PWM Output Pulse Width	t_{PWM}	5			ns	10
Minimum Input Pulse Width	t_{WI}	20			ns	11
Minimum Input Period		40			ns	12
Input Rise and Fall Times	t_r, t_f	0		1	µs	15

AC ELECTRICAL CHARACTERISTICS - DS1023-200 Delay Specifications (T_A = 0°C - 70°C; V_{CC} = 5V ± 5%)

PARAMETER	SYMBOL	MIN	TYP	MAX	UNITS	NOTES
Step Zero Delay -absolute -wrt REF	 t_{D0} t_{DREF0}	 -2	 16.5 -1.5	 22 0	 ns ns	 1, 13 2, 14
Reference Delay	t_{REF}		18	22	ns	3, 13
Delay Step Size	t_{STEP}	1.5	2	2.5	ns	16
Maximum Delay -absolute -wrt REF	 t_{DMAX} t_{DREF}	 509 494	 527 510	 548 526	 ns ns	 5, 13 6, 14
Integral Non- linearity (deviation from straight line)	t_{err}	-8	0	+8	ns	7
$\overline{OUT}$ Delta Delay	t_{INV0}	0	1	2	ns	8
IN High to PWM High	t_{PWM0}		16.5	22	ns	9, 13
Minimum PWM Output Pulse Width	t_{PWM}	5			ns	10
Minimum Input Pulse Width	t_{WI}	20			ns	11
Minimum Input Period		40			ns	12
Input Rise and Fall Times	t_r, t_f	0		1	µs	15

AC ELECTRICAL CHARACTERISTICS – DS1023-500 Delay Specifications (T_A = 0°C – 70°C; V_{CC} = 5V ± 5%)

PARAMETER	SYMBOL	MIN	TYP	MAX	UNITS	NOTES
Step Zero Delay -absolute -wrt REF	 t_{D0} t_{DREF0}	 -2	 16.5 -1.5	 22 0	 ns ns	 1, 13 2, 14
Reference Delay	t_{REF}		18	22	ns	3, 13
Delay Step Size	t_{STEP}	4	5	6	ns	16
Maximum Delay -absolute -wrt REF	 t_{DMAX} t_{DREF}	 1250 1235	 1292 1275	 1337 1315	 ns ns	 5, 13 6, 14
Integral Non- linearity (deviation from straight line)	t_{err}	-20	0	+20	ns	7
$\overline{OUT}$ Delta Delay	t_{INV0}	0	1	2	ns	8
IN High to PWM High	t_{PWM0}		16.5	22	ns	9, 13
Minimum PWM Output Pulse Width	t_{PWM}	5			ns	10
Minimum Input Pulse Width	t_{WI}	50			ns	11
Minimum Input Period		100			ns	12
Input Rise and Fall Times	t_r, t_f	0		1	µs	15

NOTES:

1. Delay from input to output with a programmed delay value of zero.

2. This is the relative delay between REF and OUT. The device is trimmed such that when programmed to zero delay the OUT output will always appear before the REF output. This parameter is numerically equal to t_{D0}-t_{REF}. (See Figure 15).

3. The reference delay is closely matched to the step zero delay to allow relative timings down to zero or less.

4. This is the worst case condition when the SubDAC switches from its maximum to minimum value. All other steps are ±0.5 lsb. This comment does not apply to -200 and -500 devices which do not use a SubDAC. (See Figure 14)

5. This is the actual measured delay from IN to OUT. This parameter will exhibit greater temperature variation than the relative delay parameter.

6. This is the actual measured delay with respect to the REF output. This parameter more closely reflects the programmed delay value than the absolute delay parameter. (See Figure 15).

7. This is the maximum deviation from a straight line response drawn between the step zero delay and the maximum programmed delay. Therefore it is indicative of the maximum error in the measured delay versus the programmed delay with respect to the REF output. The absolute delay measurement from IN to OUT will in addition have an offset error equal to the step zero delay and its tolerance. (See Figure 13).

8. Change in delay value when the inverted output is selected instead of the normal, non-inverting, output.

9. In PWM mode the delay between the rising edge of the input and the rising edge of the output.

10. The minimum value for which the PWM pulse width should be programmed. Narrower pulse widths may be programmed but output levels may be impaired and ultimately no output pulse will be produced.

11. This is the minimum allowable interval between transitions on the input to assure accurate device operation. This parameter may be violated but timing accuracy may be impaired and ultimately very narrow pulse widths will result in no output from the device.

12. This parameter applies to normal delay mode only. When a 50% duty cycle input clock is used this defines the highest usable clock frequency. When asymmetrical clock inputs are used the maximum usable clock frequency must be reduced to conform to the minimum input pulse width requirement. In PWM mode the minimum input period is equal to the step zero delay and the programmed delay ($t_{DO} + t_D$).

13. Measured from rising edge of the input to the rising edge of the output (t_{DR}).

14. From rising edge to rising edge.

15. Faster rise and fall times will give the greatest accuracy in measured delay. Slow edges (outside the specification maximum) may result in erratic operations.

16. Min and max limits do not apply for steps 253-255. Only the typical value applies for those steps.

TERMINOLOGY

Period: The time elapsed between the leading edge of the first pulse and the leading edge of the following pulse.

t_{WI} (Pulse Width): The elapsed time on the pulse between the 1.5V point on the leading edge and the 1.5V point on the trailing edge, or the 1.5V point on the trailing edge and the 1.5V point on the leading edge.

t_{RISE} (Input Rise Time): The elapsed time between the 20% and the 80% point on the leading edge of the input pulse.

t_{FALL} (Input Fall Time): The elapsed time between the 80% and the 20% point on the trailing edge of the input pulse.

t_D (Time Delay): The elapsed time between the 1.5V point on the edge of an input pulse and the 1.5V point on the corresponding edge of the output pulse.

TIMING DIAGRAM: NON-LATCHED PARALLEL MODE ($\overline{P}$/S = 0, LE = 1) Figure 10

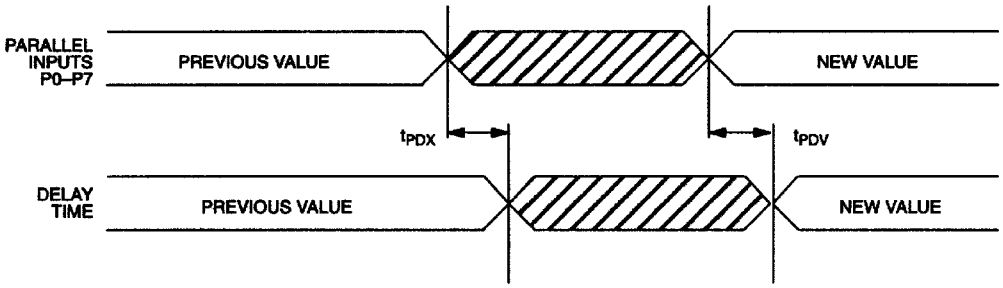

TIMING DIAGRAM: LATCHED PARALLEL MODE ($\overline{P}$/S = 0) Figure 11

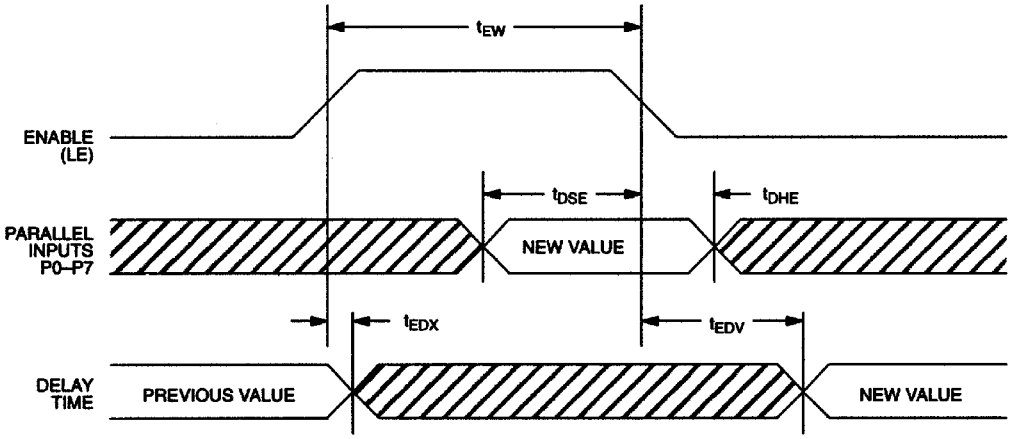

TIMING DIAGRAM: SERIAL MODE ($\overline{P}$/S = 1) Figure 12

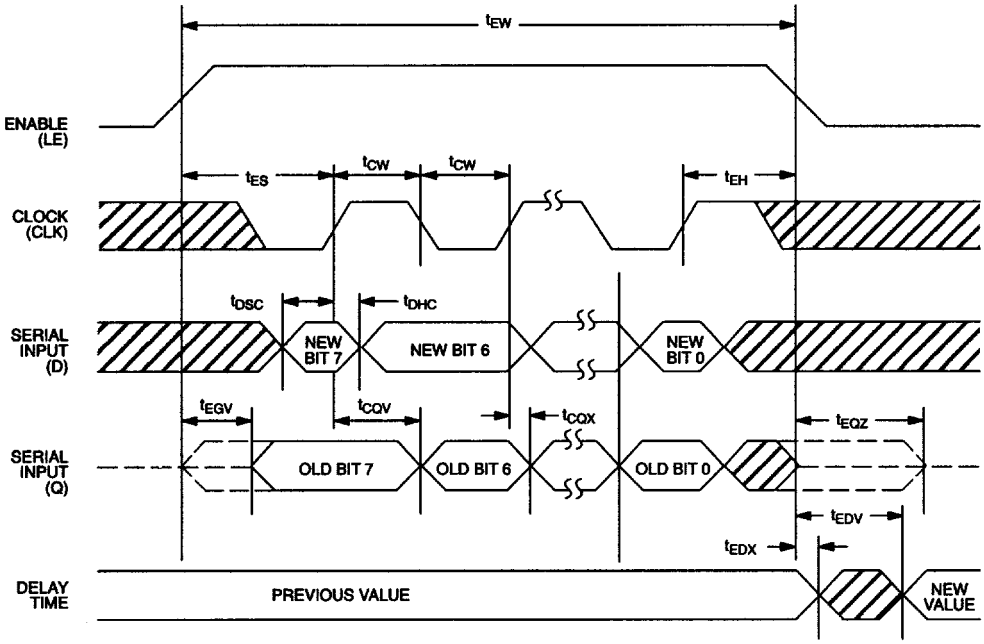

DELAY vs PROGRAMMED VALUE Figure 13

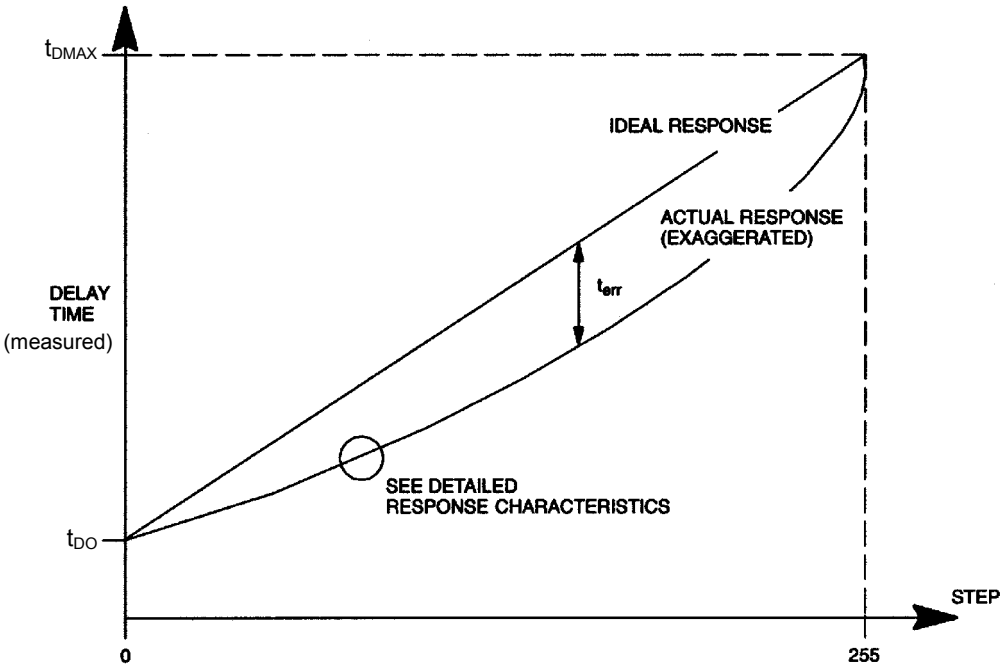

DETAILED RESPONSE CHARACTERISTICS Figure 14

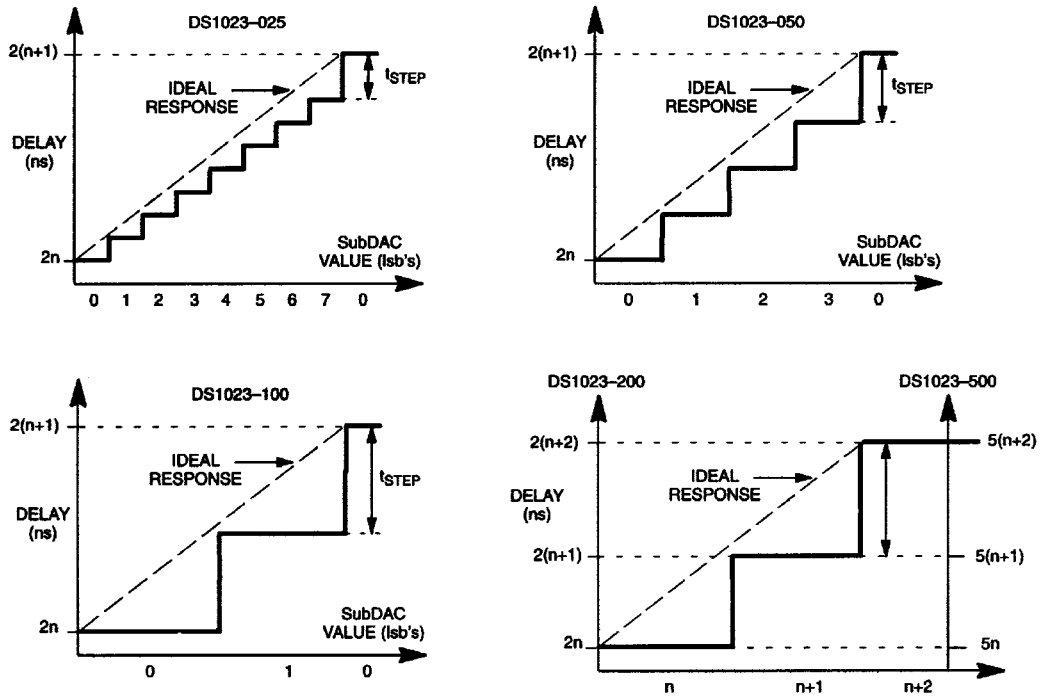

DELAY PARAMETERS Figure 15

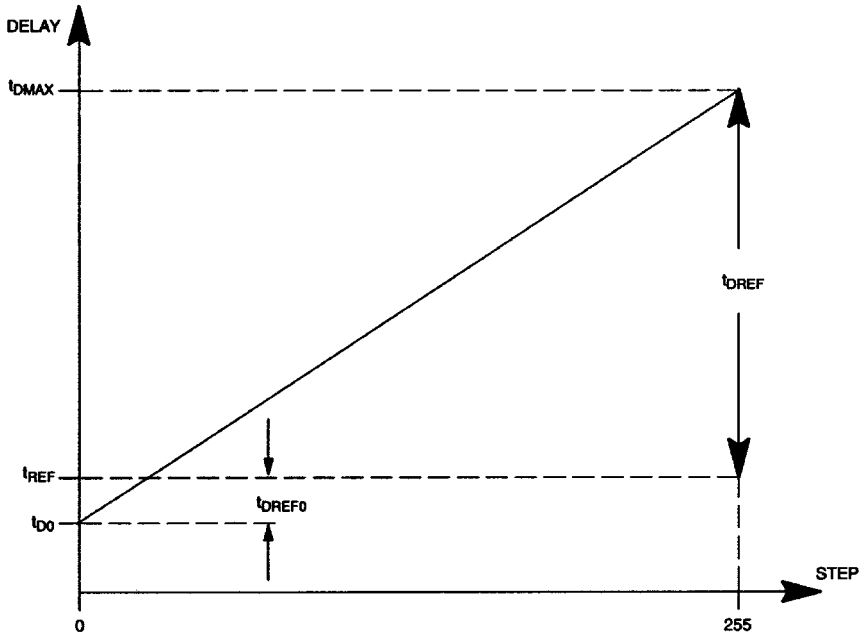

NOTES:

1. The device is trimmed such that t_{DREF} = 255 * (nominal step size).

2. Since t_{DO} is trimmed to be less than t_{REF}, the actual step size will be slightly above the nominal value.

3. Consequently the range of absolute delay values (t_{DMAX}-t_{DO}) will also exceed the nominal range by an amount equal to t_{DREF0}.