USB Hub with Microcontroller

Cypress Semiconductor Corporation • 198 Champion Court • San Jose, CA 95134-1709 • 408-943-2600
Document #: 38-08002 Rev. *D Revised March 6, 2006

Downloaded from Arrow.com.

TABLE OF CONTENTS

1.0 FEATURES **5**
2.0 FUNCTIONAL OVERVIEW **6**
3.0 PIN CONFIGURATIONS **8**
4.0 PRODUCT SUMMARY TABLES **8**
4.1 Pin Assignments 8
4.2 I/O Register Summary 9
4.3 Instruction Set Summary 10
5.0 PROGRAMMING MODEL **11**
5.1 14-bit Program Counter 11
5.1.1 Program Memory Organization 12
5.2 8-bit Accumulator (A) 13
5.3 8-bit Temporary Register (X) 13
5.4 8-bit Program Stack Pointer (PSP) 13
5.4.1 Data Memory Organization 13
5.5 8-bit Data Stack Pointer (DSP) 14
5.6 Address Modes 14
5.6.1 Data (Immediate) 14
5.6.2 Direct 14
5.6.3 Indexed 14
6.0 CLOCKING **15**
7.0 RESET **15**
7.1 Power-on Reset 15
7.2 Watchdog Reset 16
8.0 SUSPEND MODE **16**
9.0 GENERAL-PURPOSE I/O PORTS **17**
9.1 GPIO Configuration Port 18
9.2 GPIO Interrupt Enable Ports 19
10.0 12-BIT FREE-RUNNING TIMER **19**
11.0 I²C CONFIGURATION REGISTER **20**
12.0 I2C-COMPATIBLE CONTROLLER **21**
13.0 PROCESSOR STATUS AND CONTROL REGISTER **23**
14.0 INTERRUPTS **24**
14.1 Interrupt Vectors 25
14.2 Interrupt Latency 26
14.3 USB Bus Reset Interrupt 26
14.4 Timer Interrupt 26
14.5 USB Endpoint Interrupts 27
14.6 USB Hub Interrupt 27
14.7 GPIO Interrupt 27
14.8 I²C Interrupt 27
15.0 USB OVERVIEW **28**
15.1 USB Serial Interface Engine (SIE) 28
15.2 USB Enumeration 28

Downloaded from Arrow.com.

16.0 USB HUB 29
16.1 Connecting/Disconnecting a USB Device 29
16.2 Enabling/Disabling a USB Device 30
16.3 Hub Downstream Ports Status and Control 30
16.4 Downstream Port Suspend and Resume 32
16.5 USB Upstream Port Status and Control 33
17.0 USB SERIAL INTERFACE ENGINE OPERATION 34
17.1 USB Device Addresses 34
17.2 USB Device Endpoints 34
17.3 USB Control Endpoint Mode Registers 35
17.4 USB Non-control Endpoint Mode Registers 36
17.5 USB Endpoint Counter Registers 36
17.6 Endpoint Mode/Count Registers Update and Locking Mechanism 37
18.0 USB MODE TABLES 39
19.0 REGISTER SUMMARY 43
20.0 SAMPLE SCHEMATIC 45
21.0 ABSOLUTE MAXIMUM RATINGS 45
22.0 ELECTRICAL CHARACTERISTICS 46
23.0 SWITCHING CHARACTERISTICS 47
24.0 ORDERING INFORMATION 48
25.0 PACKAGE DIAGRAM 48

LIST OF FIGURES

Figure 5-1. Program Memory Space with Interrupt Vector Table 12
Figure 6-1. Clock Oscillator On-Chip Circuit 15
Figure 7-1. Watchdog Reset (Address 0x26) 16
Figure 9-1. Block Diagram of a GPIO Pin 17
Figure 9-2. Port 0 Data 17
Figure 9-3. Port1 Data 17
Figure 9-4. GPIO Configuration Register 18
Figure 9-5. Port 0 Interrupt Enable 19
Figure 9-6. Port 1 Interrupt Enable 19
Figure 10-1. Timer LSB Register 20
Figure 10-2. Timer MSB Register 20
Figure 10-3. Timer Block Diagram 20
Figure 11-1. I^2C Configuration Register 20
Figure 12-1. I^2C Data Register 21
Figure 12-2. I^2C Status and Control Register 21
Figure 13-1. Processor Status and Control Register 23
Figure 14-1. Global Interrupt Enable Register 24
Figure 14-2. USB Endpoint Interrupt Enable Register 24
Figure 14-3. Interrupt Controller Function Diagram 25
Figure 14-4. GPIO Interrupt Structure 27
Figure 16-1. Hub Ports Connect Status 29
Figure 16-2. Hub Ports Speed 30
Figure 16-3. Hub Ports Enable Register 30
Figure 16-4. Hub Downstream Ports Control Register 31

Downloaded from Arrow.com.

Figure 16-5. Hub Ports Force Low Register 31
Figure 16-6. Hub Ports SE0 Status Register 31
Figure 16-7. Hub Ports Data Register 32
Figure 16-8. Hub Ports Suspend Register 32
Figure 16-9. Hub Ports Resume Status Register 33
Figure 16-10. USB Status and Control Register 33
Figure 17-1. USB Device Address Registers 34
Figure 17-2. USB Device Endpoint Zero Mode Registers 35
Figure 17-3. USB Non-control Device Endpoint Mode Registers 36
Figure 17-4. USB Endpoint Counter Registers 36
Figure 17-5. Token/Data Packet Flow Diagram 38

LIST OF TABLES

Table 4-1. Pin Assignments 8
Table 4-2. I/O Register Summary 9
Table 4-3. Instruction Set Summary 10
Table 9-1. GPIO Port Output Control Truth Table and Interrupt Polarity 19
Table 11-1. I^2C Port Configuration 20
Table 12-1. I^2C Status and Control Register Bit Definitions 21
Table 14-1. Interrupt Vector Assignments 26
Table 16-1. Control Bit Definition for Downstream Ports 31
Table 16-2. Control Bit Definition for Upstream Port 34
Table 17-1. Memory Allocation for Endpoints 35
Table 18-1. USB Register Mode Encoding 39
Table 18-2. Decode table for *Table 18-3*: “Details of Modes for Differing Traffic Condition 40
Table 18-3. Details of Modes for Differing Traffic Conditions 41

Downloaded from Arrow.com.

1.0 Features

- **Full Speed USB hub with an integrated microcontroller**
- **8-bit USB optimized microcontroller**
  - **Harvard architecture**
  - **6-MHz external clock source**
  - **12-MHz internal CPU clock**
  - **48-MHz internal hub clock**
- **Internal memory**
  - **256 bytes of RAM**
  - **8 KB of PROM**
- **Integrated Master/Slave I^2C-compatible Controller (100 kHz) enabled through** General-purpose I/O (GPIO) **pins**
- **I/O ports**
  - **Two GPIO ports (Port 0 to 2) capable of sinking 7 mA per pin (typical)**
  - **Higher current drive achievable by connecting multiple GPIO pins together to drive a common output**
  - **Each GPIO port can be configured as inputs with internal pull-ups or open drain outputs or traditional CMOS outputs**
  - **Maskable interrupts on all I/O pins**
- **12-bit free-running timer with one microsecond clock ticks**
- **Watchdog timer (WDT)**
- **Internal Power-on Reset (POR)**
- **USB Specification compliance**
  - **Conforms to USB Specification, Version 1.1**
  - **Conforms to USB HID Specification, Version 1.1**
  - **Supports one or two device addresses with up to 5 user-configured endpoints**
    - **Up to two 8-byte control endpoints**
    - **Up to four 8-byte data endpoints**
    - **Up to two 32-byte data endpoints**
  - **Integrated USB transceivers**
  - **Supports four downstream USB ports**
  - **GPIO pins can provide individual power control outputs for each downstream USB port**
  - **GPIO pins can provide individual port over current inputs for each downstream USB port**
- **Improved output drivers to reduce electromagnetic interference (EMI)**
- **Operating voltage from 4.0V to 5.5V DC**
- **Operating temperature from 0° to 70° C**
- **Available in 28-pin SOIC (-SXC) package**
- **Industry-standard programmer support**.

Downloaded from Arrow.com.

2.0 Functional Overview

The CY7C65113C device is a one-time programmable 8-bit microcontroller with a built-in 12-Mbps USB hub that supports up to four downstream ports. The microcontroller instruction set has been optimized specifically for USB operations, although the microcontrollers can be used for a variety of non-USB embedded applications.

GPIO

The CY7C65113C has 11 GPIO pins (P0[7:0], P1[2:0]), both rated at 7 mA per pin (typical) sink current. Multiple GPIO pins can be connected together to drive a single output for more drive current capacity.

Clock

The microcontroller uses an external 6-MHz crystal and an internal oscillator to provide a reference to an internal phase-locked loop (PLL)-based clock generator. This technology allows the customer application to use an inexpensive 6-MHz fundamental crystal that reduces the clock-related noise emissions (EMI). A PLL clock generator provides the 6-, 12-, and 48-MHz clock signals for distribution within the microcontroller.

Memory

The CY7C65113C is offered with 8 KB of PROM.

Power-on Reset, Watchdog, and Free-running Timer

These parts include power-on reset logic, a Watchdog timer, and a 12-bit free-running timer. The POR logic detects when power is applied to the device, resets the logic to a known state, and begins executing instructions at PROM address 0x0000. The Watchdog timer is used to ensure the microcontroller recovers after a period of inactivity. The firmware may become inactive for a variety of reasons, including errors in the code or a hardware failure such as waiting for an interrupt that never occurs.

I^2C

The microcontroller can communicate with external electronics through the GPIO pins. An I^2C-compatible interface accommodates a 100-kHz serial link with an external device.

Timer

The free-running 12-bit timer clocked at 1 MHz provides two interrupt sources, 128-µs and 1.024-ms. The timer can be used to measure the duration of an event under firmware control by reading the timer at the start of the event and after the event is complete. The difference between the two readings indicates the duration of the event in microseconds. The upper four bits of the timer are latched into an internal register when the firmware reads the lower eight bits. A read from the upper four bits actually reads data from the internal register, instead of the timer. This feature eliminates the need for firmware to try to compensate if the upper four bits increment immediately after the lower eight bits are read.

Interrupts

The microcontroller supports ten maskable interrupts in the vectored interrupt controller. Interrupt sources include the USB Bus Reset interrupt, the 128-µs (bit 6) and 1.024-ms (bit 9) outputs from the free-running timer, five USB endpoints, the USB hub, the GPIO ports, and the I^2C-compatible master mode interface. The timer bits cause an interrupt (if enabled) when the bit toggles from LOW ‘0’ to HIGH ‘1’. The USB endpoints interrupt after the USB host has written data to the endpoint FIFO or after the USB controller sends a packet to the USB host. The GPIO ports also have a level of masking to select which GPIO inputs can cause a GPIO interrupt. Input transition polarity can be programmed for each GPIO port as part of the port configuration. The interrupt polarity can be rising edge (‘0’ to ‘1’) or falling edge (‘1’ to ‘0’).

USB

The CY7C65113C includes an integrated USB Serial Interface Engine (SIE) that supports the integrated peripherals and the hub controller function. The hardware supports up to two USB device addresses with one device address for the hub (two endpoints) and a device address for a compound device (three endpoints). The SIE allows the USB host to communicate with the hub and functions integrated into the microcontroller. The CY7C65113C part includes a 1:4 hub repeater with one upstream port and four downstream ports. The USB Hub allows power management control of the downstream ports by using GPIO pins assigned by the user firmware. The user has the option of ganging the downstream ports together with a single pair of power management pins, or providing power management for each port with four pairs of power management pins.

Downloaded from Arrow.com.

Logic Block Diagram

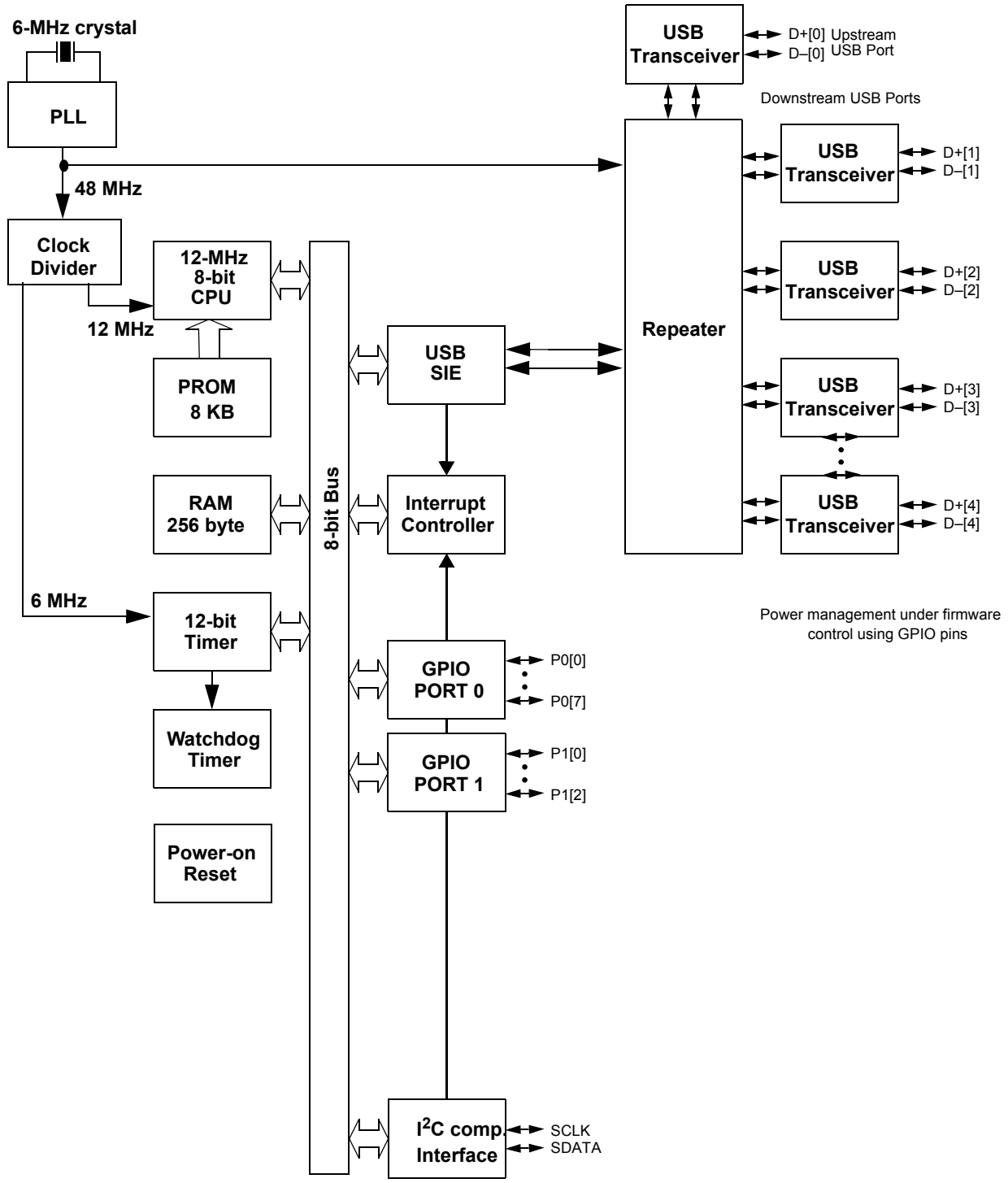

Downloaded from Arrow.com.

3.0 Pin Configurations

Top View

CY7C65113C
28-pin SOIC

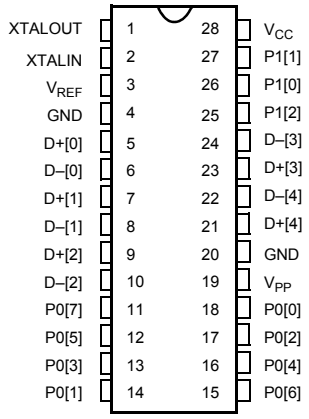

4.0 Product Summary Tables

4.1 Pin Assignments

Table 4-1. Pin Assignments

Name	I/O	28-pin	Description
D+[0], D–[0]	I/O	5, 6	Upstream port, USB differential data.
D+[1], D–[1]	I/O	7, 8	Downstream Port 1, USB differential data.
D+[2], D–[2]	I/O	9, 10	Downstream Port 2, USB differential data.
D+[3], D–[3]	I/O	23, 24	Downstream Port 3, USB differential data.
D+[4], D–[4]	I/O	21, 22	Downstream Port 4, USB differential data.
P0	I/O	P1[7:0] 11, 15, 12, 16, 13, 17, 14, 18	GPIO Port 0 capable of sinking 7 mA (typical).
P1	I/O	P1[2:0] 25, 27, 26	GPIO Port 1 capable of sinking 7 mA (typical).
$XTAL_{IN}$	IN	2	6-MHz crystal or external clock input.
$XTAL_{OUT}$	OUT	1	6-MHz crystal out.
V_{PP}		19	Programming voltage supply, tie to ground during normal operation.
V_{CC}		28	Voltage supply.
GND		4, 20	Ground.
V_{REF}	IN	3	External 3.3V supply voltage for the downstream differential data output buffers and the D+ pull-up.

Downloaded from Arrow.com.

4.2 I/O Register Summary

I/O registers are accessed via the I/O Read (IORD) and I/O Write (IOWR, IOWX) instructions. IORD reads data from the selected port into the accumulator. IOWR performs the reverse; it writes data from the accumulator to the selected port. Indexed I/O Write (IOWX) adds the contents of X to the address in the instruction to form the port address and writes data from the accumulator to the specified port. Specifying address 0 (e.g., IOWX 0h) means the I/O register is selected solely by the contents of X.

All undefined registers are reserved. Do not write to reserved registers as this may cause an undefined operation or increased current consumption during operation. When writing to registers with reserved bits, the reserved bits must be written with '0.'

Table 4-2. I/O Register Summary

Register Name	I/O Address	Read/Write	Function	Page
Port 0 Data	0x00	R/W	GPIO Port 0 Data	17
Port 1 Data	0x01	R/W	GPIO Port 1 Data	17
Port 0 Interrupt Enable	0x04	W	Interrupt Enable for Pins in Port 0	19
Port 1 Interrupt Enable	0x05	W	Interrupt Enable for Pins in Port 1	19
GPIO Configuration	0x08	R/W	GPIO Port Configurations	18
I^2C Configuration	0x09	R/W	I^2C Position Configuration	20
USB Device Address A	0x10	R/W	USB Device Address A	34
EP A0 Counter Register	0x11	R/W	USB Address A, Endpoint 0 Counter	36
EP A0 Mode Register	0x12	R/W	USB Address A, Endpoint 0 Configuration	35
EP A1 Counter Register	0x13	R/W	USB Address A, Endpoint 1 Counter	36
EP A1 Mode Register	0x14	R/W	USB Address A, Endpoint 1 Configuration	36
EP A2 Counter Register	0x15	R/W	USB Address A, Endpoint 2 Counter	36
EP A2 Mode Register	0x16	R/W	USB Address A, Endpoint 2 Configuration	36
USB Status & Control	0x1F	R/W	USB Upstream Port Traffic Status and Control	33
Global Interrupt Enable	0x20	R/W	Global Interrupt Enable	24
Endpoint Interrupt Enable	0x21	R/W	USB Endpoint Interrupt Enables	24
Interrupt Vector	0x23	R	Pending Interrupt Vector Read/Clear	26
Timer (LSB)	0x24	R	Lower Eight Bits of Free-running Timer (1 MHz)	20
Timer (MSB)	0x25	R	Upper Four Bits of Free-running Timer	20
WDR Clear	0x26	W	Watchdog Reset Clear	16
I^2C Control & Status	0x28	R/W	I^2C Status and Control	21
I^2C Data	0x29	R/W	I^2C Data	21
Reserved	0x30		Reserved	
Reserved	0x31		Reserved	
Reserved	0x32		Reserved	
Reserved	0x38-0x3F		Reserved	
USB Device Address B	0x40	R/W	USB Device Address B (not used in 5-endpoint mode)	34
EP B0 Counter Register	0x41	R/W	USB Address B, Endpoint 0 Counter	36
EP B0 Mode Register	0x42	R/W	USB Address B, Endpoint 0 Configuration, or USB Address A, Endpoint 3 in 5-endpoint mode	35
EP B1 Counter Register	0x43	R/W	USB Address B, Endpoint 1 Counter	36
EP B1 Mode Register	0x44	R/W	USB Address B, Endpoint 1 Configuration, or USB Address A, Endpoint 4 in 5-endpoint mode	36
Hub Port Connect Status	0x48	R/W	Hub Downstream Port Connect Status	29
Hub Port Enable	0x49	R/W	Hub Downstream Ports Enable	30
Hub Port Speed	0x4A	R/W	Hub Downstream Ports Speed	30

Downloaded from Arrow.com.

Table 4-2. I/O Register Summary (continued)

Register Name	I/O Address	Read/Write	Function	Page
Hub Port Control (Ports [4:1])	0x4B	R/W	Hub Downstream Ports Control (Ports [4:1])	31
Hub Port Suspend	0x4D	R/W	Hub Downstream Port Suspend Control	32
Hub Port Resume Status	0x4E	R	Hub Downstream Ports Resume Status	33
Hub Ports SE0 Status	0x4F	R	Hub Downstream Ports SE0 Status	31
Hub Ports Data	0x50	R	Hub Downstream Ports Differential Data	32
Hub Downstream Force Low	0x51	R/W	Hub Downstream Ports Force LOW (Ports [1:4])	31
Processor Status & Control	0xFF	R/W	Microprocessor Status and Control Register	23

4.3 Instruction Set Summary

Refer to the *CYASM Assembler User's Guide* for more details. Note that conditional jump instructions (i.e., JC, JNC, JZ, JNZ) take five cycles if jump is taken, four cycles if no jump.

Table 4-3. Instruction Set Summary

MNEMONIC	operand	opcode	cycles
HALT		00	7
ADD A,expr	data	01	4
ADD A,[expr]	direct	02	6
ADD A,[X+expr]	index	03	7
ADC A,expr	data	04	4
ADC A,[expr]	direct	05	6
ADC A,[X+expr]	index	06	7
SUB A,expr	data	07	4
SUB A,[expr]	direct	08	6
SUB A,[X+expr]	index	09	7
SBB A,expr	data	0A	4
SBB A,[expr]	direct	0B	6
SBB A,[X+expr]	index	0C	7
OR A,expr	data	0D	4
OR A,[expr]	direct	0E	6
OR A,[X+expr]	index	0F	7
AND A,expr	data	10	4
AND A,[expr]	direct	11	6
AND A,[X+expr]	index	12	7
XOR A,expr	data	13	4
XOR A,[expr]	direct	14	6
XOR A,[X+expr]	index	15	7
CMP A,expr	data	16	5
CMP A,[expr]	direct	17	7
CMP A,[X+expr]	index	18	8
MOV A,expr	data	19	4
MOV A,[expr]	direct	1A	5
MOV A,[X+expr]	index	1B	6
MOV X,expr	data	1C	4
MOV X,[expr]	direct	1D	5
reserved		1E	

MNEMONIC	operand	opcode	cycles
NOP		20	4
INC A	acc	21	4
INC X	x	22	4
INC [expr]	direct	23	7
INC [X+expr]	index	24	8
DEC A	acc	25	4
DEC X	x	26	4
DEC [expr]	direct	27	7
DEC [X+expr]	index	28	8
IORD expr	address	29	5
IOWR expr	address	2A	5
POP A		2B	4
POP X		2C	4
PUSH A		2D	5
PUSH X		2E	5
SWAP A,X		2F	5
SWAP A,DSP		30	5
MOV [expr],A	direct	31	5
MOV [X+expr],A	index	32	6
OR [expr],A	direct	33	7
OR [X+expr],A	index	34	8
AND [expr],A	direct	35	7
AND [X+expr],A	index	36	8
XOR [expr],A	direct	37	7
XOR [X+expr],A	index	38	8
IOWX [X+expr]	index	39	6
CPL		3A	4
ASL		3B	4
ASR		3C	4
RLC		3D	4
RRC		3E	4

Downloaded from Arrow.com.

Table 4-3. Instruction Set Summary (continued)

MNEMONIC	operand	opcode	cycles
XPAGE		1F	4
MOV A,X		40	4
MOV X,A		41	4
MOV PSP,A		60	4
CALL	addr	50-5F	10
JMP	addr	80-8F	5
CALL	addr	90-9F	10
JZ	addr	A0-AF	5 (or 4)
JNZ	addr	B0-BF	5 (or 4)

MNEMONIC	operand	opcode	cycles
RET		3F	8
DI		70	4
EI		72	4
RETI		73	8
JC	addr	C0-CF	5 (or 4)
JNC	addr	D0-DF	5 (or 4)
JACC	addr	E0-EF	7
INDEX	addr	F0-FF	14

5.0 Programming Model

5.1 14-bit Program Counter

The 14-bit Program Counter (PC) allows access to up to 8 KB of PROM available with the CY7C65113C architecture. The top 32 bytes of the ROM in the 8K part are reserved for testing purposes. The program counter is cleared during reset, such that the first instruction executed after a reset is at address 0x0000h. Typically, this is a jump instruction to a reset handler that initializes the application (see Interrupt Vectors on page 25).

The lower eight bits of the program counter are incremented as instructions are loaded and executed. The upper six bits of the program counter are incremented by executing an XPAGE instruction. As a result, the last instruction executed within a 256-byte “page” of sequential code should be an XPAGE instruction. The assembler directive “XPAGEON” causes the assembler to insert XPAGE instructions automatically. Because instructions can be either one or two bytes long, the assembler may occasionally need to insert a NOP followed by an XPAGE to execute correctly.

The address of the next instruction to be executed, the carry flag, and the zero flag are saved as two bytes on the program stack during an interrupt acknowledge or a CALL instruction. The program counter, carry flag, and zero flag are restored from the program stack during a RETI instruction. Only the program counter is restored during a RET instruction.

The program counter cannot be accessed directly by the firmware. The program stack can be examined by reading SRAM from location 0x00 and up.

Downloaded from Arrow.com.

5.1.1 Program Memory Organization

after reset	Address	
14-bit PC →	0x0000	Program execution begins here after a reset
	0x0002	USB Bus Reset interrupt vector
	0x0004	128-µs timer interrupt vector
	0x0006	1.024-ms timer interrupt vector
	0x0008	USB address A endpoint 0 interrupt vector
	0x000A	USB address A endpoint 1 interrupt vector
	0x000C	USB address A endpoint 2 interrupt vector
	0x000E	USB address B endpoint 0 interrupt vector
	0x0010	USB address B endpoint 1 interrupt vector
	0x0012	Hub interrupt vector
	0x0014	Reserved
	0x0016	GPIO interrupt vector
	0x0018	I^2C interrupt vector
	0x001A	**Program Memory begins here**
	0x1FDF	**(8 KB -32) PROM ends here (CY7C65113C)**

Figure 5-1. Program Memory Space with Interrupt Vector Table

Note that the upper 32 bytes of the 8K PROM are reserved. Therefore, user's program must not overwrite this space.

Downloaded from Arrow.com.

5.2 8-bit Accumulator (A)

The accumulator is the general-purpose register for the microcontroller.

5.3 8-bit Temporary Register (X)

The “X” register is available to the firmware for temporary storage of intermediate results. The microcontroller can perform indexed operations based on the value in X. Refer to Section 5.6.3 for additional information.

5.4 8-bit Program Stack Pointer (PSP)

During a reset, the Program Stack Pointer (PSP) is set to 0x00 and “grows” upward from this address. The PSP may be set by firmware, using the MOV PSP,A instruction. The PSP supports interrupt service under hardware control and CALL, RET, and RETI instructions under firmware control. The PSP is not readable by the firmware.

During an interrupt acknowledge, interrupts are disabled and the 14-bit program counter, carry flag, and zero flag are written as two bytes of data memory. The first byte is stored in the memory addressed by the PSP, then the PSP is incremented. The second byte is stored in memory addressed by the PSP, and the PSP is incremented again. The overall effect is to store the program counter and flags on the program “stack” and increment the PSP by two.

The Return From Interrupt (RETI) instruction decrements the PSP, then restores the second byte from memory addressed by the PSP. The PSP is decremented again and the first byte is restored from memory addressed by the PSP. After the program counter and flags have been restored from stack, the interrupts are enabled. The overall effect is to restore the program counter and flags from the program stack, decrement the PSP by two, and re-enable interrupts.

The Call Subroutine (CALL) instruction stores the program counter and flags on the program stack and increments the PSP by two.

The Return From Subroutine (RET) instruction restores the program counter but not the flags from the program stack and decrements the PSP by two.

5.4.1 Data Memory Organization

The CY7C65113C microcontrollers provide 256 bytes of data RAM. Normally, the SRAM is partitioned into four areas: program stack, user variables, data stack, and USB endpoint FIFOs. The following is one example of where the program stack, data stack, and user variables areas could be located.

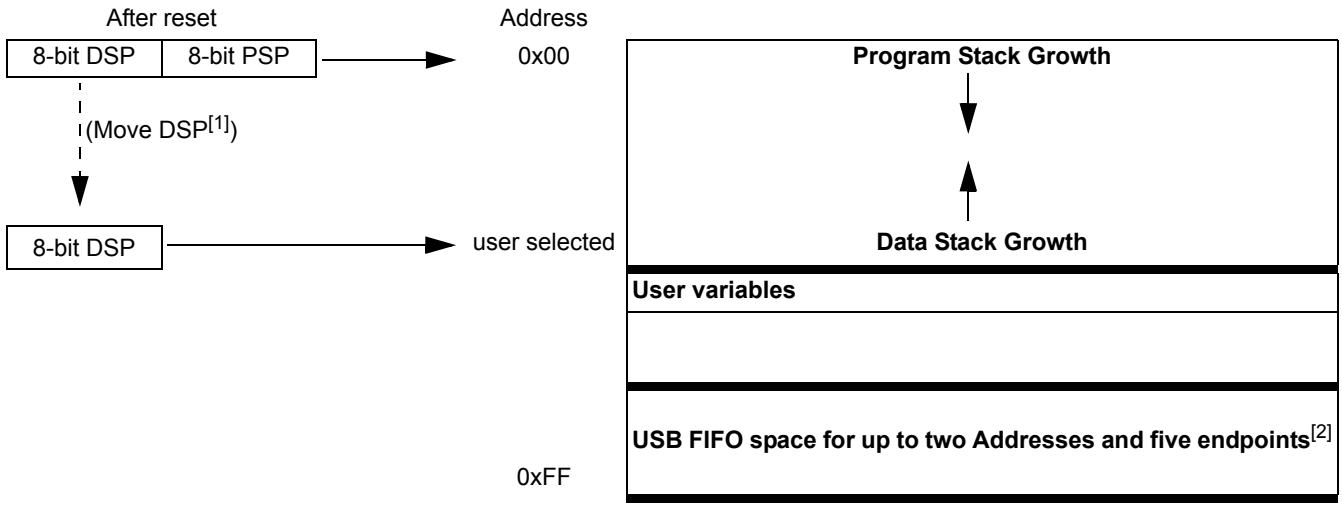

Notes:
1. Refer to Section 5.5 for a description of DSP.
2. Endpoint sizes are fixed by the Endpoint Size Bit (I/O register 0x1F, Bit 7). See *Table 17-1*.

Downloaded from Arrow.com.

5.5 8-bit Data Stack Pointer (DSP)

The Data Stack Pointer (DSP) supports PUSH and POP instructions that use the data stack for temporary storage. A PUSH instruction pre-decrements the DSP, then writes data to the memory location addressed by the DSP. A POP instruction reads data from the memory location addressed by the DSP, then post-increments the DSP.

During a reset, the DSP is reset to 0x00. A PUSH instruction when DSP equals 0x00 writes data at the top of the data RAM (address 0xFF). This writes data to the memory area reserved for USB endpoint FIFOs. Therefore, the DSP should be indexed at an appropriate memory location that does not compromise the Program Stack, user-defined memory (variables), or the USB endpoint FIFOs.

For USB applications, the firmware should set the DSP to an appropriate location to avoid a memory conflict with RAM dedicated to USB FIFOs. The memory requirements for the USB endpoints are described in Section 17.2. Example assembly instructions to do this with two device addresses (FIFOs begin at 0xD8) are shown below:

```
MOV A,20h     ; Move 20 hex into Accumulator (must be D8h or less)
SWAP A,DSP    ; swap accumulator value into DSP register.
```

5.6 Address Modes

The CY7C65113 microcontrollers support three addressing modes for instructions that require data operands: data, direct, and indexed.

5.6.1 Data (Immediate)

“Data” address mode refers to a data operand that is actually a constant encoded in the instruction. As an example, consider the instruction that loads A with the constant 0xD8:

- MOV A, 0D8h.

This instruction requires two bytes of code where the first byte identifies the “MOV A” instruction with a data operand as the second byte. The second byte of the instruction is the constant “0xD8.” A constant may be referred to by name if a prior “EQU” statement assigns the constant value to the name. For example, the following code is equivalent to the example shown above:

- DSPINIT: EQU 0D8h
- MOV A, DSPINIT.

5.6.2 Direct

“Direct” address mode is used when the data operand is a variable stored in SRAM. In that case, the one byte address of the variable is encoded in the instruction. As an example, consider an instruction that loads A with the contents of memory address location 0x10:

- MOV A, [10h].

Normally, variable names are assigned to variable addresses using “EQU” statements to improve the readability of the assembler source code. As an example, the following code is equivalent to the example shown above:

- buttons: EQU 10h
- MOV A, [buttons].

5.6.3 Indexed

“Indexed” address mode allows the firmware to manipulate arrays of data stored in SRAM. The address of the data operand is the sum of a constant encoded in the instruction and the contents of the “X” register. Normally, the constant is the “base” address of an array of data and the X register contains an index that indicates which element of the array is actually addressed:

- array: EQU 10h
- MOV X, 3
- MOV A, [X+array].

This would have the effect of loading A with the fourth element of the SRAM “array” that begins at address 0x10. The fourth element would be at address 0x13.

Downloaded from Arrow.com.

6.0 Clocking

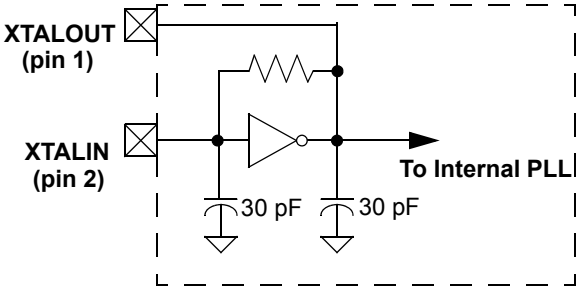

Figure 6-1. Clock Oscillator On-Chip Circuit

The XTALIN and XTALOUT are the clock pins to the microcontroller. The user can connect an external oscillator or a crystal to these pins. When using an external crystal, keep PCB traces between the chip leads and crystal as short as possible (less than 2 cm). A 6-MHz fundamental frequency parallel resonant crystal can be connected to these pins to provide a reference frequency for the internal PLL. The two internal 30-pF load caps appear in series to the external crystal and would be equivalent to a 15-pF load. Therefore, the crystal must have a required load capacitance of about 15–18 pF. A ceramic resonator does not allow the microcontroller to meet the timing specifications of full speed USB and therefore a ceramic resonator is not recommended with these parts.

An external 6-MHz clock can be applied to the XTALIN pin if the XTALOUT pin is left open. Grounding the XTALOUT pin when driving XTALIN with an oscillator does not work because the internal clock is effectively shorted to ground.

7.0 Reset

The CY7C65113C supports two resets: POR and WDR. Each of these resets causes:

- all registers to be restored to their default states
- the USB device addresses to be set to 0
- all interrupts to be disabled
- the PSP and DSP to be set to memory address 0x00.

The occurrence of a reset is recorded in the Processor Status and Control Register, as described in Section. Bits 4 and 6 are used to record the occurrence of POR and WDR respectively. Firmware can interrogate these bits to determine the cause of a reset.

Program execution starts at ROM address 0x0000 after a reset. Although this looks like interrupt vector 0, there is an important difference. Reset processing does NOT push the program counter, carry flag, and zero flag onto program stack. The firmware reset handler should configure the hardware before the “main” loop of code. Attempting to execute a RET or RETI in the firmware reset handler causes unpredictable execution results.

7.1 Power-on Reset

When V_{CC} is first applied to the chip, the POR signal is asserted and the CY7C65113C enters a “semi-suspend” state. During the semi-suspend state, which is different from the suspend state defined in the USB specification, the oscillator and all other blocks of the part are functional, except for the CPU. This semi-suspend time ensures that both a valid V_{CC} level is reached and that the internal PLL has time to stabilize before full operation begins. When the V_{CC} has risen above approximately 2.5V, and the oscillator is stable, the POR is deasserted and the on-chip timer starts counting. The first 1 ms of suspend time is not interruptible, and the semi-suspend state continues for an additional 95 ms unless the count is bypassed by a USB Bus Reset on the upstream port. The 95 ms provides time for V_{CC} to stabilize at a valid operating voltage before the chip executes code.

If a USB Bus Reset occurs on the upstream port during the 95 ms semi-suspend time, the semi-suspend state is aborted and program execution begins immediately from address 0x0000. In this case, the Bus Reset interrupt is pending but not serviced until firmware sets the USB Bus Reset Interrupt Enable bit (Bit 0, *Figure 14-1*) and enables interrupts with the EI command.

The POR signal is asserted whenever V_{CC} drops below approximately 2.5V, and remains asserted until V_{CC} rises above this level again. Behavior is the same as described above.

Downloaded from Arrow.com.

7.2 Watchdog Reset

The WDR occurs when the internal Watchdog Timer rolls over. Writing any value to the write-only Watchdog Reset Clear Register (*Figure 7-1*) clears the timer. The timer rolls over and WDR occurs if it is not cleared within t_{WATCH} of the last clear (see Section 23.0 for the value of t_{WATCH}). Bit 6 of the Processor Status and Control Register (*Figure 13-1*) is set to record this event (the register contents are set to 010X0001 by the WDR). A Watchdog Timer Reset lasts for 2 ms, after which the microcontroller begins execution at ROM address 0x0000.

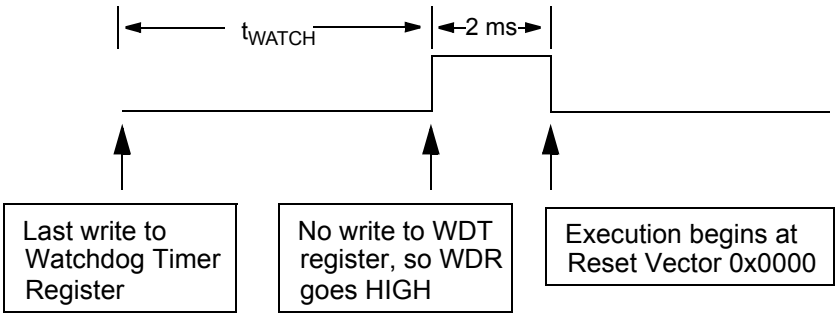

Figure 7-1. Watchdog Reset (Address 0x26)

The USB transmitter is disabled by a Watchdog Reset because the USB Device Address Registers are cleared (see Section 17.1). Otherwise, the USB Controller would respond to all address 0 transactions.

It is possible for the WDR bit of the Processor Status and Control Register (*Figure 13-1*) to be set following a POR event. If a firmware interrogates the Processor Status and Control Register for a set condition on the WDR bit, the WDR bit should be ignored if the POR bit is set (Bit 3 of the Processor Status and Control Register).

8.0 Suspend Mode

The CY7C65113C can be placed into a low-power state by setting the Suspend bit of the Processor Status and Control register. All logic blocks in the device are turned off except the GPIO interrupt logic and the USB receiver. The clock oscillator and PLL, as well as the free-running and Watchdog timers, are shut down. Only the occurrence of an enabled GPIO interrupt or non-idle bus activity at a USB upstream or downstream port wakes the part out of suspend. The Run bit in the Processor Status and Control Register must be set to resume a part out of suspend.

The clock oscillator restarts immediately after exiting suspend mode. The microcontroller returns to a fully functional state 1 ms after the oscillator is stable. The microcontroller executes the instruction following the I/O write that placed the device into suspend mode before servicing any interrupt requests.

The GPIO interrupt allows the controller to wake-up periodically and poll system components while maintaining a very low average power consumption. To achieve the lowest possible current during suspend mode, all I/O should be held at V_{CC} or Gnd. ***Note**: This also applies to internal port pins that may not be bonded in a particular package.*

Typical code for entering suspend is shown below:

```
...          ; All GPIO set to low-power state (no floating pins)
...          ; Enable GPIO interrupts if desired for wake-up
mov a, 09h   ; Set suspend and run bits
iowr FFh     ; Write to Status and Control Register – Enter suspend, wait for USB activity (or GPIO Interrupt)
nop          ; This executes before any ISR
...          ; Remaining code for exiting suspend routine.
```


Downloaded from Arrow.com.

9.0 General-purpose I/O Ports

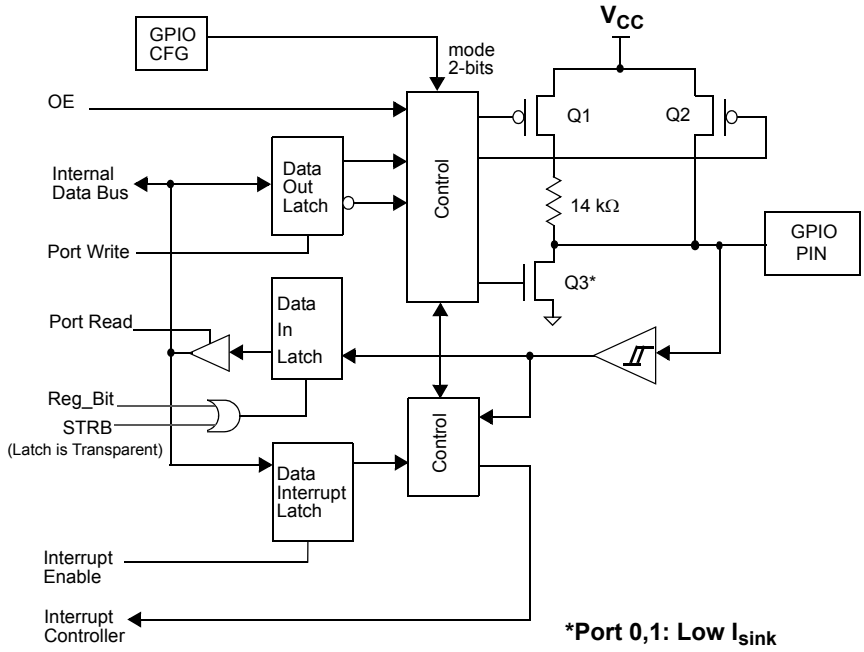

Figure 9-1. Block Diagram of a GPIO Pin

There are 11 GPIO pins (P0[7:0] and P1[2:0]) for the hardware interface. Each port can be configured as inputs with internal pull-ups, open drain outputs, or traditional CMOS outputs. The data for each GPIO port is accessible through the data registers. Port data registers are shown in *Figure 9-2* through *Figure 9-3*, and are set to 1 on reset.

.

Port 0 Data **Address 0x00**

Bit #	7	6	5	4	3	2	1	0
Bit Name	P0.7	P0.6	P0.5	P0.4	P0.3	P0.2	P0.1	P0.0
Read/Write	R/W	R/W	R/W	R/W	R/W	R/W	R/W	R/W
Reset	1	1	1	1	1	1	1	1

Figure 9-2. Port 0 Data

Port 1 Data **Address 0x01**

Bit #	-	-	-	-	-	2	1	0
Bit Name	-	-	-	-	-	P1.2	P1.1	P1.0
Read/Write	-	-	-	-	-	R/W	R/W	R/W
Reset	-	-	-	-	-	1	1	1

Figure 9-3. Port1 Data

Special care should be taken with any unused GPIO data bits. An unused GPIO data bit, either a pin on the chip or a port bit that is not bonded on a particular package, must not be left floating when the device enters the suspend state. If a GPIO data bit is left floating, the leakage current caused by the floating bit may violate the suspend current limitation specified by the USB Specifications. If a '1' is written to the unused data bit and the port is configured with open drain outputs, the unused data bit remains in an indeterminate state. Therefore, if an unused port bit is programmed in open-drain mode, it must be written with a '0.'

A read from a GPIO port always returns the present state of the voltage at the pin, independent of the settings in the Port Data Registers. During reset, all of the GPIO pins are set to a high-impedance input state. Writing a '0' to a GPIO pin drives the pin LOW. In this state, a '0' is always read on that GPIO pin unless an external source overdrives the internal pull-down device.

Downloaded from Arrow.com.

9.1 GPIO Configuration Port

Every GPIO port can be programmed as inputs with internal pull-ups, outputs LOW or HIGH, or Hi-Z (floating, the pin is not driven internally). In addition, the interrupt polarity for each port can be programmed. The Port Configuration bits (*Figure 9-4*) and the Interrupt Enable bit (*Figure 9-5* through *Figure 9-6*) determine the interrupt polarity of the port pins

.

GPIO Configuration **Address 0x08**

Bit #	7	6	5	4	3	2	1	0
Bit Name	Reserved	Reserved	Reserved	Reserved	Port 1 Config Bit 1	Port 1 Config Bit 0	Port 0 Config Bit 1	Port 0 Config Bit 0
Read/Write	-	-	-	-	R/W	R/W	R/W	R/W
Reset	-	-	-	-	0	0	0	0

Figure 9-4. GPIO Configuration Register

As shown in *Table 9-1* below, a positive polarity on an input pin represents a rising edge interrupt (LOW to HIGH), and a negative polarity on an input pin represents a falling edge interrupt (HIGH to LOW).

The GPIO interrupt is generated when all of the following conditions are met: the Interrupt Enable bit of the associated Port Interrupt Enable Register is enabled, the GPIO Interrupt Enable bit of the Global Interrupt Enable Register (*Figure 14-1*) is enabled, the Interrupt Enable Sense (bit 2, *Figure 13-1*) is set, and the GPIO pin of the port sees an event matching the interrupt polarity.

The driving state of each GPIO pin is determined by the value written to the pin's Data Register (*Figure 9-2* through *Figure 9-3*) and by its associated Port Configuration bits as shown in the GPIO Configuration Register (*Figure 9-4*). These ports are configured on a per-port basis, so all pins in a given port are configured together. The possible port configurations are detailed in *Table 9-1*. As shown in this table below, when a GPIO port is configured with CMOS outputs, interrupts from that port are disabled.

During reset, all of the bits in the GPIO Configuration Register are written with '0' to select Hi-Z mode for all GPIO ports as the default configuration.

Downloaded from Arrow.com.

Table 9-1. GPIO Port Output Control Truth Table and Interrupt Polarity

Port Config Bit 1	Port Config Bit 0	Data Register	Output Drive Strength	Interrupt Enable Bit	Interrupt Polarity
1	1	0	Output LOW	0	Disabled
		1	Resistive	1	– (Falling Edge)
1	0	0	Output LOW	0	Disabled
		1	Output HIGH	1	Disabled
0	1	0	Output LOW	0	Disabled
		1	Hi-Z	1	– (Falling Edge)
0	0	0	Output LOW	0	Disabled
		1	Hi-Z	1	+ (Rising Edge)

Q1, Q2, and Q3 discussed below are the transistors referenced in *Figure 9-1*. The available GPIO drive strength are:

- **Output LOW Mode**: The pin's Data Register is set to '0.'
  Writing '0' to the pin's Data Register puts the pin in output LOW mode, regardless of the contents of the Port Configuration Bits[1:0]. In this mode, Q1 and Q2 are OFF. Q3 is ON. The GPIO pin is driven LOW through Q3.
- **Output HIGH Mode**: The pin's Data Register is set to 1 and the Port Configuration Bits[1:0] is set to '10.'
  In this mode, Q1 and Q3 are OFF. Q2 is ON. The GPIO is pulled up through Q2. The GPIO pin is capable of sourcing... of current.
- **Resistive Mode**: The pin's Data Register is set to 1 and the Port Configuration Bits[1:0] is set to '11.'
  Q2 and Q3 are OFF. Q1 is ON. The GPIO pin is pulled up with an internal 14kΩ resistor. In resistive mode, the pin may serve as an input. Reading the pin's Data Register returns a logic HIGH if the pin is not driven LOW by an external source.
- **Hi-Z Mode**: The pin's Data Register is set to1 and Port Configuration Bits[1:0] is set either '00' or '01.'
  Q1, Q2, and Q3 are all OFF. The GPIO pin is not driven internally. In this mode, the pin may serve as an input. Reading the Port Data Register returns the actual logic value on the port pins.

9.2 GPIO Interrupt Enable Ports

Each GPIO pin can be individually enabled or disabled as an interrupt source. The Port 0–1 Interrupt Enable Registers provide this feature with an Interrupt Enable bit for each GPIO pin.

During a reset, GPIO interrupts are disabled by clearing all of the GPIO Interrupt Enable bits. Writing a '1' to a GPIO Interrupt Enable bit enables GPIO interrupts from the corresponding input pin. All GPIO pins share a common interrupt, as discussed in Section 14.7.

Port 0 Interrupt Enable **Address 0x04**

Bit #	7	6	5	4	3	2	1	0
Bit Name	P0.7 Intr Enable	P0.6 Intr Enable	P0.5 Intr Enable	P0.4 Intr Enable	P0.3 Intr Enable	P0.2 Intr Enable	P0.1 Intr Enable	P0.0 Intr Enable
Read/Write	W	W	W	W	W	W	W	W
Reset	0	0	0	0	0	0	0	0

Figure 9-5. Port 0 Interrupt Enable

Port 1 Interrupt Enable **Address 0x05**

Bit #	7	6	5	4	3	2	1	0
Bit Name	Reserved	Reserved	Reserved	Reserved	Reserved	P0.2 Intr Enable	P1.1 Intr Enable	P1.0 Intr Enable
Read/Write	-	-	-	-	-	W	W	W
Reset	-	-	-	-	-	0	0	0

Figure 9-6. Port 1 Interrupt Enable

10.0 12-bit Free-Running Timer

The 12-bit timer operates with a 1-µs tick, provides two interrupts (128 µs and 1.024 ms) and allows the firmware to directly time events that are up to 4 ms in duration. The lower eight bits of the timer can be read directly by the firmware. Reading the lower eight bits latches the upper four bits into a temporary register. When the firmware reads the upper four bits of the timer, it is actually reading the count stored in the temporary register. The effect of this is to ensure a stable 12-bit timer value can be read, even when the two reads are separated in time.

Downloaded from Arrow.com.

Timer LSB **Address 0x24**

Bit #	7	6	5	4	3	2	1	0
Bit Name	Timer Bit 7	TimerBit 6	Timer Bit 5	Timer Bit 4	Timer Bit 3	Timer Bit 2	Timer Bit 1	Timer Bit 0
Read/Write	R	R	R	R	R	R	R	R
Reset	0	0	0	0	0	0	0	0

Figure 10-1. Timer LSB Register

Bit [7:0]: Timer lower eight bits.

Timer MSB								**Address 0x25**
Bit #	7	6	5	4	3	2	1	0
Bit Name	Reserved	Reserved	Reserved	Reserved	Timer Bit 11	Timer Bit 10	Timer Bit 9	Timer Bit 8
Read/Write	–	–	–	–	R	R	R	R
Reset	0	0	0	0	0	0	0	0

Figure 10-2. Timer MSB Register

Bit [3:0]: Timer higher nibble

Bit [7:4]: Reserved.

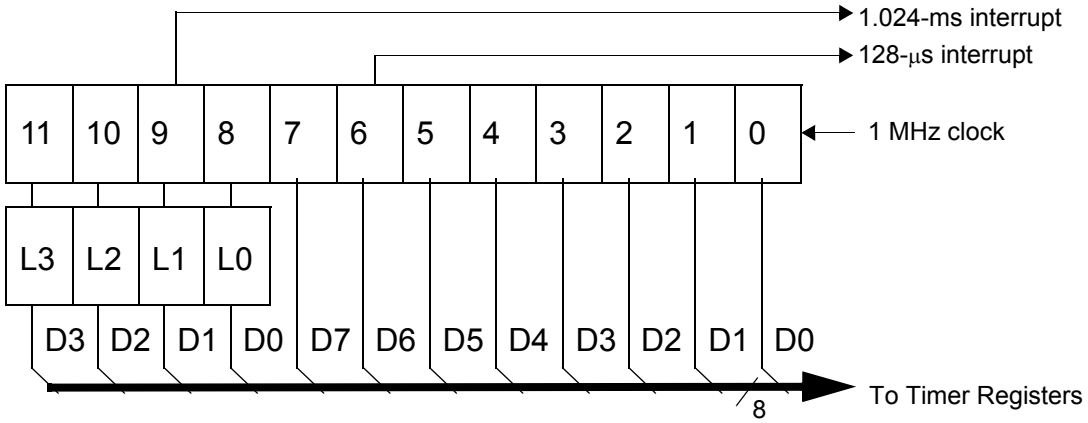

Figure 10-3. Timer Block Diagram

11.0 I²C Configuration Register

Internal hardware supports communication with external devices through an I²C-compatible interface. I²C-compatible function is discussed in detail in Section 12.0.[3] The I²C Position bit (Bit 7, *Figure 11-1*) and I²C Port Width bit (Bit 1, *Figure 11-1*) select the locations of the SCL (clock) and SDA (data) pins on Port 1 as shown in *Table 11-1*. These bits are cleared on reset. When the GPIO is configured for I²C function, the internal pull ups on the pins are disabled. Addition of an external weak pull-up resistors on SCL and SDA is recommended.

I²C Configuration **Address 0x09**

Bit #	7	6	5	4	3	2	1	0
Bit Name	I²C Position	Reserved	Reserved	Reserved	Reserved	Reserved	I²C Port Width	Reserved
Read/Write	R/W	R/W	R/W	R/W	R/W	R/W	R/W	R/W
Reset	0	0	0	0	0	0	0	0

Figure 11-1. I²C Configuration Register

Table 11-1. I²C Port Configuration

I²C Position (Bit7, *Figure 11-1*)	I²C Port Width (Bit1, *Figure 11-1*)	I²C Position
0	0	I²C on P1[1:0], 0:SCL, 1:SDA

Note:

3. I²C-compatible function must be separately enabled, as described in Section 12.0.

Downloaded from Arrow.com.

12.0 I2C-compatible Controller

The I2C-compatible block provides a versatile two-wire communication with external devices, supporting master, slave, and multi-master modes of operation. The I2C-compatible block functions by handling the low-level signaling in hardware, and issuing interrupts as needed to allow firmware to take appropriate action during transactions. While waiting for firmware response, the hardware keeps the I2C-compatible bus idle if necessary.

The I2C-compatible block generates an interrupt to the microcontroller at the end of each received or transmitted byte, when a stop bit is detected by the slave when in receive mode, or when arbitration is lost. Details of the interrupt responses are given in Section 14.8.

The I2C-compatible interface consists of two registers, an I^2C Data Register (*Figure 12-1*) and an I^2C Status and Control Register (*Figure 12-2*). The I^2C Data Register is implemented as separate read and write registers. Generally, the I^2C Status and Control Register should only be monitored after the I^2C interrupt, as all bits are valid at that time. Polling this register at other times could read misleading bit status if a transaction is underway.

The I^2C clock (SCL) is connected to bit 0 of GPIO port 1, and the I^2C SDA data is connected to bit 1 GPIO port 1. The port selection is determined by settings in the I^2C Port Configuration Register (Section 11.0). Once the I^2C-compatible functionality is enabled by setting the I^2C Enable bit of the I^2C Status and Control Register (bit 0, *Figure 12-2*), the two LSB ([1:0]) of the corresponding GPIO port is placed in Open Drain mode, regardless of the settings of the GPIO Configuration Register. In Open Drain mode, the GPIO pin outputs LOW if the pin's Data Register is '0', and the pin is in Hi-Z mode if the pin's Data Register is '1'. The electrical characteristics of the I^2C-compatible interface is the same as that of GPIO port 1. Note that the I_{OL} (max) is 2 mA @ V_{OL} = 2.0V for port 1.

All control of the I^2C clock (SCL) and data (SDA) lines is performed by the I^2C-compatible block.

I2C Data **Address 0x29**

Bit #	7	6	5	4	3	2	1	0
Bit Name	I^2C Data 7	I^2C Data 6	I^2C Data 5	I^2C Data 4	I^2C Data 3	I^2C Data 2	I^2C Data 1	I^2C Data 0
Read/Write	R/W	R/W	R/W	R/W	R/W	R/W	R/W	R/W
Reset	X	X	X	X	X	X	X	X

Figure 12-1. I^2C Data Register

Bits [7..0]: I^2C Data

Contains the 8-bit data on the I^2C Bus.

I^2C Status and Control **Address 0x28**

Bit #	7	6	5	4	3	2	1	0
Bit Name	MSTR Mode	Continue/Busy	Xmit Mode	ACK	Addr	ARB Lost/Restart	Received Stop	I^2C Enable
Read/Write	R/W	R/W	R/W	R/W	R/W	R/W	R/W	R/W
Reset	0	0	0	0	0	0	0	0

Figure 12-2. I^2C Status and Control Register

The I^2C Status and Control register bits are defined in *Table 12-1*, with a more detailed description following.

Table 12-1. I^2C Status and Control Register Bit Definitions

Bit	Name	Description
0	I^2C Enable	When set to '1', the I^2C-compatible function is enabled. When cleared, I^2C GPIO pins operate normally.
1	Received Stop	Reads 1 only in slave receive mode, when I^2C Stop bit detected (unless firmware did not ACK the last transaction).
2	ARB Lost/Restart	Reads 1 to indicate master has lost arbitration. Reads 0 otherwise. Write to 1 in master mode to perform a restart sequence (also set Continue bit).
3	Addr	Reads 1 during first byte after start/restart in slave mode, or if master loses arbitration. Reads 0 otherwise. This bit should always be written as 0.
4	ACK	In receive mode, write 1 to generate ACK, 0 for no ACK. In transmit mode, reads 1 if ACK was received, 0 if no ACK received.
5	Xmit Mode	Write to 1 for transmit mode, 0 for receive mode.

Downloaded from Arrow.com.

Table 12-1. I²C Status and Control Register Bit Definitions (continued)

Bit	Name	Description
6	Continue/Busy	Write 1 to indicate ready for next transaction. Reads 1 when I²C-compatible block is busy with a transaction, 0 when transaction is complete.
7	MSTR Mode	Write to 1 for master mode, 0 for slave mode. This bit is cleared if master loses arbitration. Clearing from 1 to 0 generates Stop bit.

Bit 7 : MSTR Mode

Setting this bit to 1 causes the I²C-compatible block to initiate a master mode transaction by sending a start bit and transmitting the first data byte from the data register (this typically holds the target address and R/W bit). Subsequent bytes are initiated by setting the Continue bit, as described below.

Clearing this bit (set to 0) causes the GPIO pins to operate normally.

In master mode, the I²C-compatible block generates the clock (SCK), and drives the data line as required depending on transmit or receive state. The I²C-compatible block performs any required arbitration and clock synchronization. IN the event of a loss of arbitration, this MSTR bit is cleared, the ARB Lost bit is set, and an interrupt is generated by the microcontroller. If the chip is the target of an external master that wins arbitration, then the interrupt is held off until the transaction from the external master is completed.

When MSTR Mode is cleared from 1 to 0 by a firmware write, an I²C Stop bit is generated.

Bit 6 : Continue/Busy

This bit is written by the firmware to indicate that the firmware is ready for the next byte transaction to begin. In other words, the bit has responded to an interrupt request and has completed the required update or read of the data register. During a read this bit indicates if the hardware is busy and is locking out additional writes to the I²C Status and Control register. This locking allows the hardware to complete certain operations that may require an extended period of time. Following an I²C interrupt, the I²C-compatible block does not return to the Busy state until firmware sets the Continue bit. This allows the firmware to make one control register write without the need to check the Busy bit.

Bit 5 : Xmit Mode

This bit is set by firmware to enter transmit mode and perform a data transmit in master or slave mode. Clearing this bit sets the part in receive mode. Firmware generally determines the value of this bit from the R/W bit associated with the I²C address packet. The Xmit Mode bit state is ignored when initially writing the MSTR Mode or the Restart bits, as these cases always cause transmit mode for the first byte.

Bit 4 : ACK

This bit is set or cleared by firmware during receive operation to indicate if the hardware should generate an ACK signal on the I²C-compatible bus. Writing a 1 to this bit generates an ACK (SDA LOW) on the I2C-compatible bus at the ACK bit time. During transmits (Xmit Mode = 1), this bit should be cleared.

Bit 3 : Addr

This bit is set by the I²C-compatible block during the first byte of a slave receive transaction, after an I²C start or restart. The Addr bit is cleared when the firmware sets the Continue bit. This bit allows the firmware to recognize when the master has lost arbitration, and in slave mode it allows the firmware to recognize that a start or restart has occurred.

Bit 2 : ARB Lost/Restart

This bit is valid as a status bit (ARB Lost) after master mode transactions. In master mode, set this bit (along with the Continue and MSTR Mode bits) to perform an I²C restart sequence. The I²C target address for the restart must be written to the data register before setting the Continue bit. To prevent false ARB Lost signals, the Restart bit is cleared by hardware during the restart sequence.

Bit 1 : Receive Stop

This bit is set when the slave is in receive mode and detects a stop bit on the bus. The Receive Stop bit is not set if the firmware terminates the I²C transaction by not acknowledging the previous byte transmitted on the I²C-compatible bus, e.g., in receive mode if firmware sets the Continue bit and clears the ACK bit.

Bit 0 : I²C Enable

Set this bit to override GPIO definition with I²C-compatible function on the two I²C-compatible pins. When this bit is cleared, these pins are free to function as GPIOs. In I²C-compatible mode, the two pins operate in open drain mode, independent of the GPIO configuration setting.

Downloaded from Arrow.com.

13.0 Processor Status and Control Register

Processor Status and Control **Address 0xFF**

Bit #	7	6	5	4	3	2	1	0
Bit Name	IRQ Pending	Watchdog Reset	USB Bus Reset Interrupt	Power-on Reset	Suspend	Interrupt Enable Sense	Reserved	Run
Read/Write	R	R/W	R/W	R/W	R/W	R	R/W	R/W
Reset	0	0	0	1	0	0	0	1

Figure 13-1. Processor Status and Control Register

Bit 0: Run

This bit is manipulated by the HALT instruction. When Halt is executed, all the bits of the Processor Status and Control Register are cleared to 0. Since the run bit is cleared, the processor stops at the end of the current instruction. The processor remains halted until an appropriate reset occurs (power-on or Watchdog). This bit should normally be written as a ‘1.’

Bit 1: Reserved

Bit 1 is reserved and must be written as a zero.

Bit 2: Interrupt Enable Sense

This bit indicates whether interrupts are enabled or disabled. Firmware has no direct control over this bit as writing a zero or one to this bit position has no effect on interrupts. A ‘0’ indicates that interrupts are masked off and a ‘1’ indicates that the interrupts are enabled. This bit is further gated with the bit settings of the Global Interrupt Enable Register (*Figure 14-1*) and USB End Point Interrupt Enable Register (*Figure 14-2*). Instructions DI, EI, and RETI manipulate the state of this bit.

Bit 3: Suspend

Writing a ‘1’ to the Suspend bit halts the processor and cause the microcontroller to enter the suspend mode that significantly reduces power consumption. A pending, enabled interrupt or USB bus activity causes the device to come out of suspend. After coming out of suspend, the device resumes firmware execution at the instruction following the IOWR which put the part into suspend. An IOWR attempting to put the part into suspend is ignored if USB bus activity is present. See Section 8.0 for more details on suspend mode operation.

Bit 4: Power-on Reset

The Power-on Reset is set to ‘1’ during a power-on reset. The firmware can check bits 4 and 6 in the reset handler to determine whether a reset was caused by a power-on condition or a Watchdog timeout. A POR event may be followed by a Watchdog reset before firmware begins executing, as explained below.

Bit 5: USB Bus Reset Interrupt

The USB Bus Reset Interrupt bit is set when the USB Bus Reset is detected on receiving a USB Bus Reset signal on the upstream port. The USB Bus Reset signal is a single-ended zero (SE0) that lasts from 12 to 16 µs. An SE0 is defined as the condition in which both the D+ line and the D– line are LOW at the same time.

Bit 6: Watchdog Reset

The Watchdog Reset is set during a reset initiated by the Watchdog Timer. This indicates the Watchdog Timer went for more than t_{WATCH} (8 ms minimum) between Watchdog clears. This can occur with a POR event, as noted below.

Bit 7: IRQ Pending

The IRQ pending, when set, indicates that one or more of the interrupts has been recognized as active. An interrupt remains pending until its interrupt enable bit is set (*Figure 14-1*, *Figure 14-2*) and interrupts are globally enabled. At that point, the internal interrupt handling sequence clears this bit until another interrupt is detected as pending.

During power-up, the Processor Status and Control Register is set to 00010001, which indicates a POR (bit 4 set) has occurred and no interrupts are pending (bit 7 clear). During the 96-ms suspend at start-up (explained in Section 7.1), a Watchdog Reset also occurs unless this suspend is aborted by an upstream SE0 before 8 ms. If a WDR occurs during the power-up suspend interval, firmware reads 01010001 from the Status and Control Register after power-up. Normally, the POR bit should be cleared so a subsequent WDR can be clearly identified. If an upstream bus reset is received before firmware examines this register, the Bus Reset bit may also be set.

During a Watchdog Reset, the Processor Status and Control Register is set to 01XX0001, which indicates a Watchdog Reset (bit 6 set) has occurred and no interrupts are pending (bit 7 clear). The Watchdog Reset does not effect the state of the POR and the Bus Reset Interrupt bits.

Downloaded from Arrow.com.

14.0 Interrupts

Interrupts are generated by GPIO pins, internal timers, I^2C-compatible operation, internal USB hub and USB traffic conditions. All interrupts are maskable by the Global Interrupt Enable Register and the USB End Point Interrupt Enable Register. Writing a '1' to a bit position enables the interrupt associated with that bit position.

Global Interrupt Enable Register **Address 0X20**

Bit #	7	6	5	4	3	2	1	0
Bit Name	Reserved	I^2C Interrupt Enable	GPIO Interrupt Enable	Reserved	USB Hub Interrupt Enable	1.024-ms Interrupt Enable	128-µs Interrupt Enable	USB Bus RST Interrupt Enable
Read/Write	–	R/W	R/W	-	R/W	R/W	R/W	R/W
Reset	–	0	0	X	0	0	0	0

Figure 14-1. Global Interrupt Enable Register

Bit 0 : USB Bus RST Interrupt Enable

1 = Enable Interrupt on a USB Bus Reset; 0 = Disable interrupt on a USB Bus Reset (Refer to section 14.3).

Bit 1 :128-µs Interrupt Enable

1 = Enable Timer interrupt every 128 µs; 0 = Disable Timer Interrupt for every 128 µs.

Bit 2 : 1.024-ms Interrupt Enable

1 = Enable Timer interrupt every 1.024 ms; 0 = Disable Timer Interrupt every 1.024 ms.

Bit 3 : USB Hub Interrupt Enable

1 = Enable Interrupt on a Hub status change; 0 = Disable interrupt due to hub status change. (Refer to section 14.6.)

Bit 4 : Reserved.

Bit 5 : GPIO Interrupt Enable

1 = Enable Interrupt on falling/rising edge on any GPIO; 0 = Disable Interrupt on falling/rising edge on any GPIO (Refer to section 14.7, 9.1 and 9.2.).

Bit 6 : I^2C Interrupt Enable

1 = Enable Interrupt on I2C related activity; 0 = Disable I2C related activity interrupt. (Refer to section 14.8.)

Bit 7 : Reserved.

USB Endpoint Interrupt Enable **Address 0X21**

Bit #	7	6	5	4	3	2	1	0
Bit Name	Reserved	Reserved	Reserved	EPB1 Interrupt Enable	EPB0 Interrupt Enable	EPA2 Interrupt Enable	EPA1 Interrupt Enable	EPA0 Interrupt Enable
Read/Write	–	–	–	R/W	R/W	R/W	R/W	R/W
Reset	–	–	–	0	0	0	0	0

Figure 14-2. USB Endpoint Interrupt Enable Register

Bit 0: EPA0 Interrupt Enable

1 = Enable Interrupt on data activity through endpoint A0; 0 = Disable Interrupt on data activity through endpoint A0

Bit 1: EPA1 Interrupt Enable

1 = Enable Interrupt on data activity through endpoint A1; 0 = Disable Interrupt on data activity through endpoint A1

Bit 2: EPA2 Interrupt Enable

1 = Enable Interrupt on data activity through endpoint A2; 0 = Disable Interrupt on data activity through endpoint A2.

Bit 3: EPB0 Interrupt Enable

1 = Enable Interrupt on data activity through endpoint B0; 0 = Disable Interrupt on data activity through endpoint B0

Bit 4: EPB1 Interrupt Enable

1 = Enable Interrupt on data activity through endpoint B1; 0 = Disable Interrupt on data activity through endpoint B1

Bit [7..5] : Reserved

Downloaded from Arrow.com.

During a reset, the contents of the Global Interrupt Enable Register and USB End Point Interrupt Enable Register are cleared, effectively disabling all interrupts,

The interrupt controller contains a separate flip-flop for each interrupt. See *Figure 14-3* for the logic block diagram of the interrupt controller. When an interrupt is generated, it is first registered as a pending interrupt. It stays pending until it is serviced or a reset occurs. A pending interrupt only generates an interrupt request if it is enabled by the corresponding bit in the interrupt enable registers. The highest priority interrupt request is serviced following the completion of the currently executing instruction.

When servicing an interrupt, the hardware does the following:

1. Disables all interrupts by clearing the Global Interrupt Enable bit in the CPU (the state of this bit can be read at Bit 2 of the Processor Status and Control Register, *Figure 13-1*).
2. Clears the flip-flop of the current interrupt.
3. Generates an automatic CALL instruction to the ROM address associated with the interrupt being serviced (i.e., the Interrupt Vector, see Section 14.1).

The instruction in the interrupt table is typically a JMP instruction to the address of the Interrupt Service Routine (ISR). The user can reenable interrupts in the interrupt service routine by executing an EI instruction. Interrupts can be nested to a level limited only by the available stack space.

The Program Counter value as well as the Carry and Zero flags (CF, ZF) are stored onto the Program Stack by the automatic CALL instruction generated as part of the interrupt acknowledge process. The user firmware is responsible for ensuring that the processor state is preserved and restored during an interrupt. The PUSH A instruction should typically be used as the first command in the ISR to save the accumulator value and the POP A instruction should be used to restore the accumulator value just before the RETI instruction. The program counters CF and ZF are restored and interrupts are enabled when the RETI instruction is executed.

The IDI and EI instruction can be used to disable and enable interrupts, respectively. These instruction affect only the Global Interrupt Enable bit of the CPU. If desired, EI can be used to re-enable interrupts while inside an ISR, instead of waiting for the RETI that exits the ISR. While the global interrupt enable bit is cleared, the presence of a pending interrupt can be detected by examining the IRQ Sense bit (Bit 7 in the Processor Status and Control Register).

14.1 Interrupt Vectors

The Interrupt Vectors supported by the USB Controller are listed in *Table 14-1*. The lowest-numbered interrupt (USB Bus Reset interrupt) has the highest priority, and the highest-numbered interrupt (I^2C interrupt) has the lowest priority.

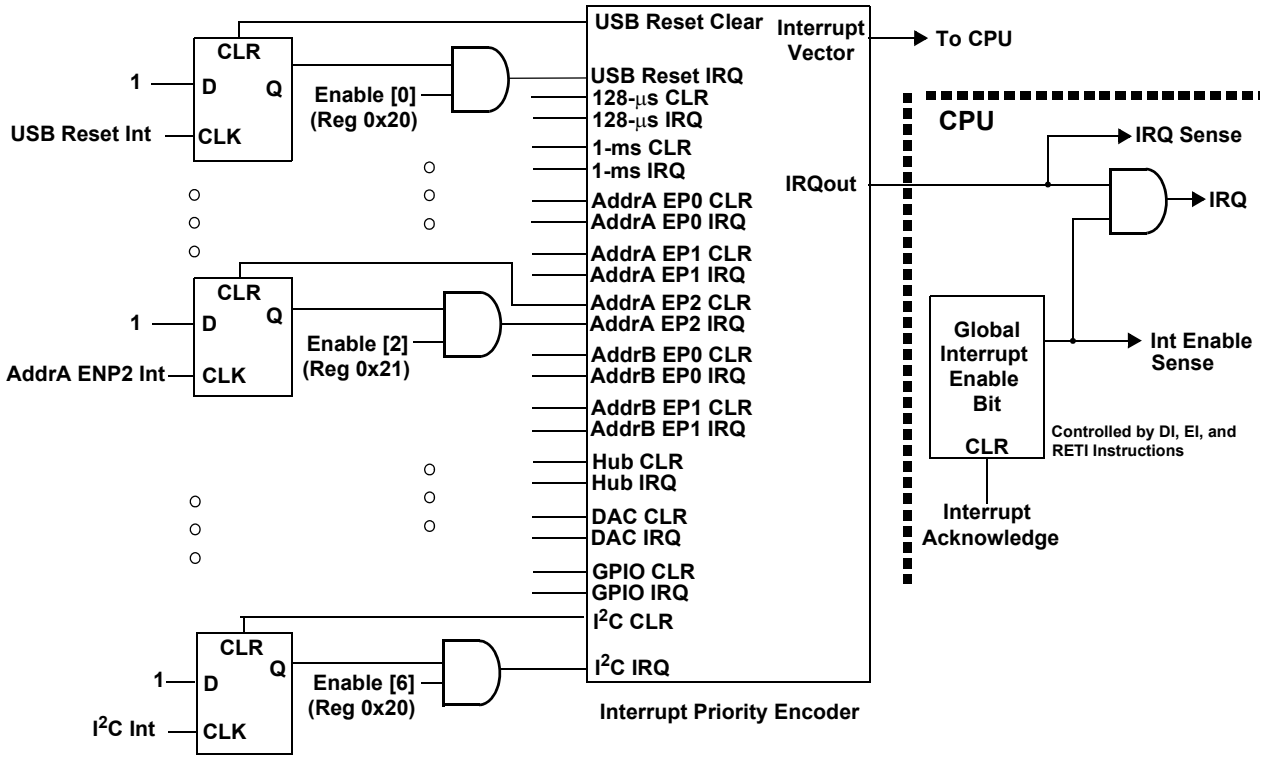

Figure 14-3. Interrupt Controller Function Diagram

Downloaded from Arrow.com.

Although Reset is not an interrupt, the first instruction executed after a reset is at PROM address 0x0000h—which corresponds to the first entry in the Interrupt Vector Table. Because the JMP instruction is two bytes long, the interrupt vectors occupy two bytes.

Table 14-1. Interrupt Vector Assignments

Interrupt Vector Number	ROM Address	Function
Not Applicable	0x0000	Execution after Reset begins here
1	0x0002	USB Bus Reset interrupt
2	0x0004	128-µs timer interrupt
3	0x0006	1.024-ms timer interrupt
4	0x0008	USB Address A Endpoint 0 interrupt
5	0x000A	USB Address A Endpoint 1 interrupt
6	0x000C	USB Address A Endpoint 2 interrupt
7	0x000E	USB Address B Endpoint 0 interrupt
8	0x0010	USB Address B Endpoint 1 interrupt
9	0x0012	USB Hub interrupt
10	0x0014	DAC interrupt
11	0x0016	GPIO interrupt
12	0x0018	I^2C interrupt

14.2 Interrupt Latency

Interrupt latency can be calculated from the following equation:

Interrupt latency = (Number of clock cycles remaining in the current instruction) + (10 clock cycles for the CALL instruction) + (5 clock cycles for the JMP instruction)

For example, if a 5-clock cycle instruction such as JC is being executed when an interrupt occurs, the first instruction of the Interrupt Service Routine executes a minimum of 16 clocks (1+10+5) or a maximum of 20 clocks (5+10+5) after the interrupt is issued. For a 12-MHz internal clock (6-MHz crystal), 20 clock periods is 20/12 MHz = 1.667 µs.

14.3 USB Bus Reset Interrupt

The USB Controller recognizes a USB Reset when a Single Ended Zero (SE0) condition persists on the upstream USB port for 12–16 µs. SE0 is defined as the condition in which both the D+ line and the D– line are LOW. A USB Bus Reset may be recognized for an SE0 as short as 12 µs, but is always recognized for an SE0 longer than 16 µs. When a USB Bus Reset is detected, bit 5 of the Processor Status and Control Register *(Figure 13-1)* is set to record this event. In addition, the controller clears the following registers:

SIE Section: .... USB Device Address Registers (0x10, 0x40)

Hub Section: .....Hub Ports Connect Status (0x48)

.....Hub Ports Enable (0x49)

..... Hub Ports Speed (0x4A)

..... Hub Ports Suspend (0x4D)

..... Hub Ports Resume Status (0x4E)

..... Hub Ports SE0 Status (0x4F)

..... Hub Ports Data (0x50)

.....Hub Downstream Force (0x51).

A USB Bus Reset Interrupt is generated at the end of the USB Bus Reset condition when the SE0 state is deasserted. If the USB reset occurs during the start-up delay following a POR, the delay is aborted as described in Section 7.1.

14.4 Timer Interrupt

There are two periodic timer interrupts: the 128-µs interrupt and the 1.024-ms interrupt. The user should disable both timer interrupts before going into the suspend mode to avoid possible conflicts between servicing the timer interrupts first or the suspend request first.

Downloaded from Arrow.com.

14.5 USB Endpoint Interrupts

There are five USB endpoint interrupts, one per endpoint. A USB endpoint interrupt is generated after the USB host writes to a USB endpoint FIFO or after the USB controller sends a packet to the USB host. The interrupt is generated on the last packet of the transaction (e.g., on the host's ACK on an IN transfer, or on the device ACK on an OUT transfer). If no ACK is received during an IN transaction, no interrupt is generated.

14.6 USB Hub Interrupt

A USB hub interrupt is generated by the hardware after a connect/disconnect change, babble, or a resume event is detected by the USB repeater hardware. The babble and resume events are additionally gated by the corresponding bits of the Hub Port Enable Register (*Figure 16-3*). The connect/disconnect event on a port does not generate an interrupt if the SIE does not drive the port (i.e., the port is being forced).

14.7 GPIO Interrupt

Each of the GPIO pins can generate an interrupt, if enabled. The interrupt polarity can be programmed for each GPIO port as part of the GPIO configuration. All of the GPIO pins share a single interrupt vector, which means the firmware needs to read the GPIO ports with enabled interrupts to determine which pin or pins caused an interrupt. A block diagram of the GPIO interrupt logic is shown in *Figure 14-4*.

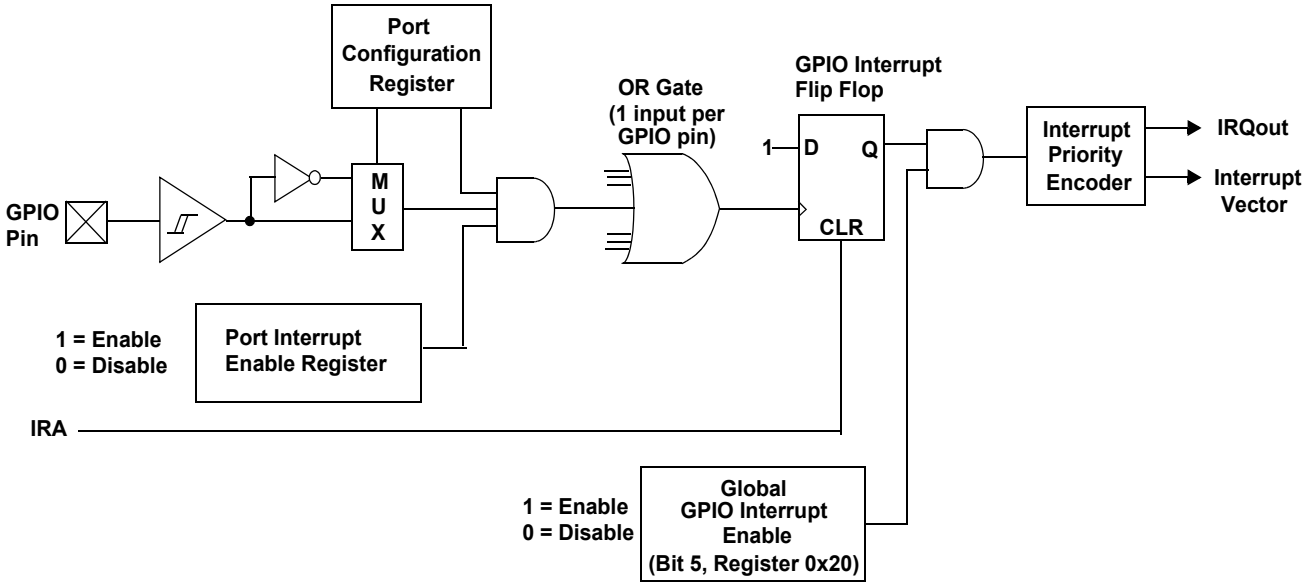

Figure 14-4. GPIO Interrupt Structure

Refer to Sections 9.1 and 9.2 for more information of setting GPIO interrupt polarity and enabling individual GPIO interrupts. If one port pin has triggered an interrupt, no other port pins can cause a GPIO interrupt until that port pin has returned to its inactive (non-trigger) state or its corresponding port interrupt enable bit is cleared. The USB Controller does not assign interrupt priority to different port pins and the Port Interrupt Enable Registers are not cleared during the interrupt acknowledge process.

14.8 I^2C Interrupt

The I^2C interrupt occurs after various events on the I^2C-compatible bus to signal the need for firmware interaction. This generally involves reading the I^2C Status and Control Register (*Figure 12-2*) to determine the cause of the interrupt, loading/reading the I^2C Data Register as appropriate, and finally writing the Processor Status and Control Register *(Figure 13-1*) to initiate the subsequent transaction. The interrupt indicates that status bits are stable and it is safe to read and write the I^2C registers. Refer to Section 12.0 for details on the I^2C registers.

When enabled, the I^2C-compatible state machines generate interrupts on completion of the following conditions. The referenced bits are in the I^2C Status and Control Register.

1. In **slave receive** mode, after the slave receives a byte of data: The *Addr* bit is set, if this is the first byte since a start or restart signal was sent by the external master. Firmware must read or write the data register as necessary, then set the *ACK, Xmit MODE,* and *Continue/Busy* bits appropriately for the next byte.
2. In **slave receive** mode, after a stop bit is detected: The *Received Stop* bit is set, if the stop bit follows a slave receive transaction where the *ACK* bit was cleared to 0, no stop bit detection occurs.

Downloaded from Arrow.com.

3. In **slave transmit** mode, after the slave transmits a byte of data: The *ACK* bit indicates if the master that requested the byte acknowledged the byte. If more bytes are to be sent, firmware writes the next byte into the Data Register and then sets the *Xmit MODE* and *Continue/Busy* bits as required.
4. In **master transmit** mode, after the master sends a byte of data. Firmware should load the Data Register if necessary, and set the *Xmit MODE, MSTR MODE*, and *Continue/Busy* bits appropriately. Clearing the *MSTR MODE* bit issues a stop signal to the I^2C-compatible bus and return to the idle state.
5. In **master receive** mode, after the master receives a byte of data: Firmware should read the data and set the *ACK* and *Continue/Busy* bits appropriately for the next byte. Clearing the *MSTR MODE* bit at the same time causes the master state machine to issue a stop signal to the I^2C-compatible bus and leave the I2C-compatible hardware in the idle state.
6. When the master loses arbitration: This condition clears the *MSTR MODE* bit and sets the *ARB Lost/Restart* bit immediately and then waits for a stop signal on the I^2C-compatible bus to generate the interrupt.

The *Continue/Busy* bit is cleared by hardware prior to interrupt conditions 1 to 4. Once the Data Register has been read or written, firmware should configure the other control bits and set the *Continue/Busy* bit for subsequent transactions. Following an interrupt from master mode, firmware should perform only one write to the Status and Control Register that sets the *Continue/Busy* bit, without checking the value of the *Continue/Busy* bit. The Busy bit may otherwise be active and I^2C register contents may be changed by the hardware during the transaction, until the I^2C interrupt occurs.

15.0 USB Overview

The USB hardware includes a USB Hub repeater with one upstream and up to seven downstream ports. The USB Hub repeater interfaces to the microcontroller through a full-speed serial interface engine (SIE). An external series resistor of R_{ext} must be placed in series with all upstream and downstream USB outputs in order to meet the USB driver requirements of the USB specification. The CY7C65113C microcontroller can provide the functionality of a compound device consisting of a USB hub and permanently attached functions.

15.1 USB Serial Interface Engine (SIE)

The SIE allows the CY7C65113C microcontroller to communicate with the USB host through the USB repeater portion of the hub. The SIE simplifies the interface between the microcontroller and USB by incorporating hardware that handles the following USB bus activity independently of the microcontroller:

- Bit stuffing/unstuffing
- Checksum generation/checking
- ACK/NAK/STALL
- Token type identification
- Address checking.

Firmware is required to handle the following USB interface tasks:

- Coordinate enumeration by responding to SETUP packets
- Fill and empty the FIFOs
- Suspend/Resume coordination
- Verify and select DATA toggle values.

15.2 USB Enumeration

The internal hub and any compound device function are enumerated under firmware control. The hub is enumerated first, followed by any integrated compound function. After the hub is enumerated, the USB host can read hub connection status to determine which (if any) of the downstream ports need to be enumerated. The following is a brief summary of the typical enumeration process of the CY7C65113C by the USB host. For a detailed description of the enumeration process, refer to the USB specification.

In this description, ‘Firmware’ refers to embedded firmware in the CY7C65113C controller.

1. The host computer sends a SETUP packet followed by a DATA packet to USB address 0 requesting the Device descriptor.
2. Firmware decodes the request and retrieves its Device descriptor from the program memory tables.
3. The host computer performs a control read sequence and Firmware responds by sending the Device descriptor over the USB bus, via the on-chip FIFOs.
4. After receiving the descriptor, the host sends a SETUP packet followed by a DATA packet to address 0 assigning a new USB address to the device.
5. Firmware stores the new address in its USB Device Address Register (for example, as Address B) after the no-data control sequence completes.

Downloaded from Arrow.com.

6. The host sends a request for the Device descriptor using the new USB address.
7. Firmware decodes the request and retrieves the Device descriptor from program memory tables.
8. The host performs a control read sequence and Firmware responds by sending its Device descriptor over the USB bus.
9. The host generates control reads from the device to request the Configuration and Report descriptors.
10. Once the device receives a Set Configuration request, its functions may now be used.
11. Following enumeration as a hub, Firmware can optionally indicate to the host that a compound device exists (for example, the keyboard in a keyboard/hub device).
12. The host carries out the enumeration process with this additional function as though it were attached downstream from the hub.
13. When the host assigns an address to this device, it is stored as the other USB address (for example, Address A).

16.0 USB Hub

A USB hub is required to support:

- Connectivity behavior: service connect/disconnect detection
- Bus fault detection and recovery
- Full-/Low-speed device support

These features are mapped onto a hub repeater and a hub controller. The hub controller is supported by the processor integrated into the CY7C65113C microcontroller. The hardware in the hub repeater detects whether a USB device is connected to a downstream port. The connection to a downstream port is through a differential signal pair (D+ and D–). Each downstream port provided by the hub requires external R_{UDN} resistors from each signal line to ground, so that when a downstream port has no device connected, the hub reads a LOW (zero) on both D+ and D–. This condition is used to identify the “no connect” state.

The hub must have a resistor R_{UUP} connected between its upstream D+ line and V_{REG} to indicate it is a full speed USB device.

The hub generates an EOP at EOF1, in accordance with the USB 1.1 Specification (section 11.2.2, page 234) as well as USB 2.0 specification (section 11.2.5, page 304).

16.1 Connecting/Disconnecting a USB Device

A low-speed (1.5 Mbps) USB device has a pull-up resistor on the D– pin. At connect time, the bias resistors set the signal levels on the D+ and D– lines. When a low-speed device is connected to a hub port, the hub sees a LOW on D+ and a HIGH on D–. This causes the hub repeater to set a connect bit in the Hub Ports Connect Status register for the downstream port (see *Figure 16-1*). Then the hub repeater generates a Hub Interrupt to notify the microcontroller that there has been a change in the Hub downstream status. The firmware sets the speed of this port in the Hub Ports Speed Register (see *Figure 16-2*).

A full-speed (12 Mbps) USB device has a pull-up resistor from the D+ pin, so the hub sees a HIGH on D+ and a LOW on D–. In this case, the hub repeater sets a connect bit in the Hub Ports Connect Status register and generates a Hub Interrupt to notify the microcontroller of the change in Hub status. The firmware sets the speed of this port in the Hub Ports Speed Register (see *Figure 16-2*)

Connects are recorded by the time a non-SE0 state lasts for more than 2.5 µs on a downstream port.

When a USB device is disconnected from the Hub, the downstream signal pair eventually floats to a single-ended zero state. The hub repeater recognizes a disconnect once the SE0 state on a downstream port lasts from 2.0 to 2.5 µs. On a disconnect, the corresponding bit in the Hub Ports Connect Status register is cleared, and the Hub Interrupt is generated

Hub Ports Connect Status **Address 0x48**

Bit #	7	6	5	4	3	2	1	0
Bit Name	Reserved	Reserved	Reserved	Reserved	Port 4 Connect Status	Port 3 Connect Status	Port 2 Connect Status	Port 1 Connect Status
Read/Write	R/W	R/W	R/W	R/W	R/W	R/W	R/W	R/W
Reset	0	0	0	0	0	0	0	0

Figure 16-1. Hub Ports Connect Status

Bit [0..3] : Port x Connect Status (where x = 1..4).

When set to 1, Port x is connected; When set to 0, Port x is disconnected.

Bit [4..7] : Reserved.

Set to 0.

The Hub Ports Connect Status register is cleared to zero by reset or USB bus reset, then set to match the hardware configuration by the hub repeater hardware. The Reserved bits [4..7] should always read as ‘0’ to indicate no connection.

Downloaded from Arrow.com.

Hub Ports Speed **Address 0x4A**

Bit #	7	6	5	4	3	2	1	0
Bit Name	Reserved	Reserved	Reserved	Reserved	Port 4 Speed	Port 3 Speed	Port 2 Speed	Port 1 Speed
Read/Write	R/W	R/W	R/W	R/W	R/W	R/W	R/W	R/W
Reset	0	0	0	0	0	0	0	0

Figure 16-2. Hub Ports Speed

Bit [0..3] : Port x Speed (where x = 1..4).

Set to 1 if the device plugged in to Port x is Low Speed; Set to 0 if the device plugged in to Port x is Full Speed.

Bit [4..7] : Reserved.

Set to 0.

The Hub Ports Speed register is cleared to zero by reset or bus reset. This must be set by the firmware on issuing a port reset. The Reserved bits [4..7] should always read as '0.'

16.2 Enabling/Disabling a USB Device

After a USB device connection has been detected, firmware must update status change bits in the hub status change data structure that is polled periodically by the USB host. The host responds by sending a packet that instructs the hub to reset and enable the downstream port. Firmware then sets the bit in the Hub Ports Enable register (*Figure 16-3*), for the downstream port. The hub repeater hardware responds to an enable bit in the Hub Ports Enable register (*Figure 16-3*) by enabling the downstream port, so that USB traffic can flow to and from that port.

If a port is marked enabled and is not suspended, it receives all USB traffic from the upstream port, and USB traffic from the downstream port is passed to the upstream port (unless babble is detected). Low-speed ports do not receive full-speed traffic from the upstream port.

When firmware writes to the Hub Ports Enable register (*Figure 16-3*) to enable a port, the port is not enabled until the end of any packet currently being transmitted. If there is no USB traffic, the port is enabled immediately.

When a USB device disconnection has been detected, firmware must update status bits in the hub change status data structure that is polled periodically by the USB host. In suspended mode, a connect or disconnect event generates an interrupt (if the hub interrupt is enabled) even if the port is disabled.

Hub Ports Enable Register **Address 0x49**

Bit #	7	6	5	4	3	2	1	0
Bit Name	Reserved	Reserved	Reserved	Reserved	Port 4 Enable	Port 3 Enable	Port 2 Enable	Port 1 Enable
Read/Write	R/W	R/W	R/W	R/W	R/W	R/W	R/W	R/W
Reset	0	0	0	0	0	0	0	0

Figure 16-3. Hub Ports Enable Register

Bit [0..3] : Port x Enable (where x = 1..4)

Set to 1 if Port x is enabled; Set to 0 if Port x is disabled

Bit [4..7] : Reserved.

Set to 0.

The Hub Ports Enable register is cleared to zero by reset or bus reset to disable all downstream ports as the default condition. A port is also disabled by internal hub hardware (enable bit cleared) if babble is detected on that downstream port. Babble is defined as:

- Any non-idle downstream traffic on an enabled downstream port at EOF2.
- Any downstream port with upstream connectivity established at EOF2 (i.e., no EOP received by EOF2).

16.3 Hub Downstream Ports Status and Control

Data transfer on hub downstream ports is controlled according to the bit settings of the Hub Downstream Ports Control Register (*Figure 16-4*). Each downstream port is controlled by two bits, as defined in *Table 16-1* below. The Hub Downstream Ports Control Register is cleared upon reset or bus reset, and the reset state is the state for normal USB traffic. Any downstream port being forced must be marked as disabled (*Figure 16-3*) for proper operation of the hub repeater.

Firmware should use this register for driving bus reset and resume signaling to downstream ports. Controlling the port pins through this register uses standard USB edge rate control according to the speed of the port, set in the Hub Port Speed Register.

Downloaded from Arrow.com.

The downstream USB ports are designed for connection of USB devices, but can also serve as output ports under firmware control. This allows unused USB ports to be used for functions such as driving LEDs or providing additional input signals. Pulling up these pins to voltages above V_{REF} may cause current flow into the pin.

This register is not reset by USB bus reset. These bits must be cleared before going into suspend.

Hub Downstream Ports Control Register **Address 0x4B**

Bit #	7	6	5	4	3	2	1	0
Bit Name	Port 4 Control Bit 1	Port 4 Control Bit 0	Port 3 Control Bit 1	Port 3 Control Bit 0	Port 2 Control Bit 1	Port 2 Control Bit 0	Port 1 Control Bit 1	Port 1 Control Bit 0
Read/Write	R/W	R/W	R/W	R/W	R/W	R/W	R/W	R/W
Reset	0	0	0	0	0	0	0	0

Figure 16-4. Hub Downstream Ports Control Register

Table 16-1. Control Bit Definition for Downstream Ports

Control Bits		Control Action
Bit1	**Bit 0**	
0	0	Not Forcing (Normal USB Function)
0	1	Force Differential ‘1’ (D+ HIGH, D– LOW)
1	0	Force Differential ‘0’ (D+ LOW, D– HIGH)
1	1	Force SE0 state

An alternate means of forcing the downstream ports is through the Hub Ports Force Low Register (*Figure 16-5*) Register. With this register the pins of the downstream ports can be individually forced LOW, or left unforced. Unlike the Hub Downstream Ports Control Register, above, the Force Low Register does not produce standard USB edge rate control on the forced pins. However, this register allows downstream port pins to be held LOW in suspend. This register can be used to drive SE0 on all downstream ports when unconfigured, as required in the USB 1.1 specification.

Hub Ports Force Low **Address 0x51**

Bit #	7	6	5	4	3	2	1	0
Bit Name	Force Low D+[4]	Force Low D–[4]	Force Low D+[3]	Force Low D–[3]	Force Low D+[2]	Force Low D–[2]	Force Low D+[1]	Force Low D–[1]
Read/Write	R/W	R/W	R/W	R/W	R/W	R/W	R/W	R/W
Reset	0	0	0	0	0	0	0	0

Figure 16-5. Hub Ports Force Low Register

The data state of downstream ports can be read through the HUB Ports SE0 Status Register (*Figure 16-6*) and the Hub Ports Data Register (*Figure 16-7*). The data read from the Hub Ports Data Register is the differential data only and is independent of the settings of the Hub Ports Speed Register (*Figure 16-2*). When the SE0 condition is sensed on a downstream port, the corresponding bits of the Hub Ports Data Register hold the last differential data state before the SE0. Hub Ports SE0 Status Register and Hub Ports Data Register are cleared upon reset or bus reset

Hub Ports SE0 Status **Address 0x4F**

Bit #	7	6	5	4	3	2	1	0
Bit Name	Reserved	Reserved	Reserved	Reserved	Port 4 SE0 Status	Port 3 SE0 Status	Port 2 SE0 Status	Port 1 SE0 Status
Read/Write	R	R	R	R	R	R	R	R
Reset	0	0	0	0	0	0	0	0

Figure 16-6. Hub Ports SE0 Status Register

Bit [0..3]: Port x SE0 Status (where x = 1..4).

Set to 1 if a SE0 is output on the Port x bus; Set to 0 if a Non-SE0 is output on the Port x bus.

Bit [4..7]: Reserved.

Set to 0

Downloaded from Arrow.com.

Hub Ports Data **ADDRESS 0x50**

Bit #	7	6	5	4	3	2	1	0
Bit Name	Reserved	Reserved	Reserved	Reserved	Port 4 Diff. Data	Port 3 Diff. Data	Port 2 Diff. Data	Port 1 Diff. Data
Read/Write	R	R	R	R	R	R	R	R
Reset	0	0	0	0	0	0	0	0

Figure 16-7. Hub Ports Data Register

Bit [0..3] : Port x Diff Data (where x = 1..4).

Set to 1 if D+ > D- (forced differential 1, if signal is differential, i.e. not a SE0 or SE1). Set to 0 if D- > D+ (forced differential 0, if signal is differential, i.e. not a SE0 or SE1).

Bit [4..7] : Reserved.

Set to 0.

16.4 Downstream Port Suspend and Resume

The Hub Ports Suspend Register (*Figure 16-8*) and Hub Ports Resume Status Register (*Figure 16-9*) indicate the suspend and resume conditions on downstream ports. The suspend register must be set by firmware for any ports that are selectively suspended. Also, this register is only valid for ports that are selectively suspended.

If a port is marked as selectively suspended, normal USB traffic is not sent to that port. Resume traffic is also prevented from going to that port, unless the Resume comes from the selectively suspended port. If a resume condition is detected on the port, hardware reflects a Resume back to the port, sets the Resume bit in the Hub Ports Resume Register, and generates a hub interrupt.

If a disconnect occurs on a port marked as selectively suspended, the suspend bit is cleared.

The Device Remote Wakeup bit (bit 7) of the Hub Ports Suspend Register controls whether or not the resume signal is propagated by the hub after a connect or a disconnect event. If the Device Remote Wakeup bit is set, the hub will automatically propagate the resume signal after a connect or a disconnect event. If the Device Remote Wakeup bit is cleared, the hub will not propagate the resume signal. The setting of the Device Remote Wakeup flag has no impact on the propagation of the resume signal after a downstream remote wakeup event. The hub will automatically propagate the resume signal after a remote wakeup event, regardless of the state of the Device Remote wakeup bit. The state of this bit has no impact on the generation of the hub interrupt.

A resume bit is set automatically when hardware detects a resume condition on a selectively suspended downstream port. The resume condition is a differential ‘1’ for a low-speed device and a differential ‘0’ for a full-speed device.

These registers are cleared on reset or USB bus reset.

Hub Ports Suspend **Address 0x4D**

Bit #	7	6	5	4	3	2	1	0
Bit Name	Device Remote Wakeup	Reserved	Reserved	Reserved	Port 4 Selective Suspend	Port 3 Selective Suspend	Port 2 Selective Suspend	Port 1 Selective Suspend
Read/Write	R/W	R/W	R/W	R/W	R/W	R/W	R/W	R/W
Reset	0	0	0	0	0	0	0	0

Figure 16-8. Hub Ports Suspend Register

Bit [0..3] : Port x Selective Suspend (where x = 1..4).

Set to 1 if Port x is Selectively Suspended; Set to 0 if Port x Do not suspend.

Bit 7 : Device Remote Wakeup.

When set to 1, Enable hardware upstream resume signaling for connect/disconnect events during global resume.

When set to 0, Disable hardware upstream resume signaling for connect/disconnect events during global resume.

Downloaded from Arrow.com.

Hub Ports Resume **Address 0x4E**

Bit #	7	6	5	4	3	2	1	0
Bit Name	Reserved	Reserved	Reserved	Reserved	Resume 4	Resume 3	Resume 2	Resume 1
Read/Write	-	-	-	-	R	R	R	R
Reset	0	0	0	0	0	0	0	0

Figure 16-9. Hub Ports Resume Status Register

Bit [0..3] : Resume x (where x = 1..4).

When set to 1 Port x requesting to be resumed (set by hardware); default state is 0.

Bit [4..7] : Reserved.

Set to 0.

Resume from a selectively suspended port, with the hub not in suspend, typically involves the following actions:

1. Hardware detects the Resume, drives a K to the port, and generates the hub interrupt. The corresponding bit in the Resume Status Register (0x4E) reads '1' in this case.
2. Firmware responds to hub interrupt, and reads register 0x4E to determine the source of the Resume.
3. Firmware begins driving K on the port for 10 ms or more through register 0x4B.
4. Firmware clears the Selective Suspend bit for the port (0x4D), which clears the Resume bit (0x4E). This ends the hardware-driven Resume, but the firmware-driven Resume continues. To prevent traffic being fed by the hub repeater to the port during or just after the Resume, firmware should disable this port.
5. Firmware drives a timed SE0 on the port for two low-speed bit times as appropriate. Firmware must disable interrupts during this SE0 so the SE0 pulse isn't inadvertently lengthened, and appear as a bus reset to the downstream device.
6. Firmware drives a J on the port for one low-speed bit time, then it idles the port.
7. Firmware re-enables the port.

Resume when the hub is suspended typically involves these actions:

1. Hardware detects the Resume, drives a K on the upstream (which is then reflected to all downstream enabled ports), and generates the hub interrupt.
2. The part comes out of suspend and the clocks start.
3. Once the clocks are stable, firmware execution resumes. An internal counter ensures that this takes at least 1 ms. Firmware should check for Resume from any selectively suspended ports. If found, the Selective Suspend bit for the port should be cleared; no other action is necessary.
4. The Resume ends when the host stops sending K from upstream. Firmware should check for changes to the Enable and Connect Registers. If a port has become disabled but is still connected, an SE0 has been detected on the port. The port should be treated as having been reset, and should be reported to the host as newly connected.

Firmware can choose to clear the Device Remote Wake-up bit (if set) to implement firmware timed states for port changes. All allowed port changes wake the part. Then, the part can use internal timing to determine whether to take action or return to suspend. If Device Remote Wake-up is set, automatic hardware assertions take place on Resume events.

16.5 USB Upstream Port Status and Control

USB status and control is regulated by the USB Status and Control Register, as shown in *Figure 16-10*. All bits in the register are cleared during reset.

.

USB Status and Control **Address 0x1F**

Bit #	7	6	5	4	3	2	1	0
Bit Name	Endpoint Size	Endpoint Mode	D+ Upstream	D– Upstream	Bus Activity	Control Action Bit 2	Control Action Bit 1	Control Action Bit 0
Read/Write	R/W	R/W	R	R	R/W	R/W	R/W	R/W
Reset	0	0	0	0	0	0	0	0

Figure 16-10. USB Status and Control Register

Bits[2..0]: Control Action

Set to control action as per *Table 16-2*. The three control bits allow the upstream port to be driven manually by firmware. For normal USB operation, all of these bits must be cleared. *Table 16-2* shows how the control bits affect the upstream port.

Downloaded from Arrow.com.

Table 16-2. Control Bit Definition for Upstream Port

Control Bits	Control Action
000	Not Forcing (SIE Controls Driver)
001	Force D+[0] HIGH, D–[0] LOW
010	Force D+[0] LOW, D–[0] HIGH
011	Force SE0; D+[0] LOW, D–[0] LOW
100	Force D+[0] LOW, D–[0] LOW
101	Force D+[0] HiZ, D–[0] LOW
110	Force D+[0] LOW, D–[0] HiZ
111	Force D+[0] HiZ, D–[0] HiZ

Bit 3: Bus Activity.

This is a “sticky” bit that indicates if any non-idle USB event has occurred on the upstream USB port. Firmware should check and clear this bit periodically to detect any loss of bus activity. Writing a ‘0’ to the Bus Activity bit clears it, while writing a ‘1’ preserves the current value. In other words, the firmware can clear the Bus Activity bit, but only the SIE can set it.

Bits 4 and 5: D– Upstream and D+ Upstream.

These bits give the state of each upstream port pin individually: 1 = HIGH, 0 = LOW.

Bit 6: Endpoint Mode.

This bit used to configure the number of USB endpoints. See *Section 17.2* for a detailed description.

Bit 7: Endpoint Size.

This bit used to configure the number of USB endpoints. See *Section 17.2* for a detailed description.

The hub generates an EOP at EOF1 in accordance with the USB 1.1 Specification, Section 11.2.2 as well as USB 2.0 specification (section 11.2.5, page 304).

17.0 USB Serial Interface Engine Operation

The CY7C65113C SIE supports operation as a single device or a compound device. This section describes the two device addresses, the configurable endpoints, and the endpoint function.

17.1 USB Device Addresses

The USB Controller provides two USB Device Address Registers: A (addressed at 0x10)and B (addressed at 0x40). Upon reset and under default conditions, Device A has three endpoints and Device B has two endpoints. The USB Device Address Register contents are cleared during a reset, setting the USB device addresses to zero and disabling these addresses. *Figure 17-1* shows the format of the USB Address Registers.

USB Device Address (Device A, B) **Addresses 0x10(A) and 0x40(B)**

Bit #	7	6	5	4	3	2	1	0
Bit Name	Device Address Enable	Device Address Bit 6	Device Address Bit 5	Device Address Bit 4	Device Address Bit 3	Device Address Bit 2	Device Address Bit 1	Device Address Bit 0
Read/Write	R/W	R/W	R/W	R/W	R/W	R/W	R/W	R/W
Reset	0	0	0	0	0	0	0	0

Figure 17-1. USB Device Address Registers

Bits[6..0]: Device Address.

Firmware writes this bits during the USB enumeration process to the non-zero address assigned by the USB host.

Bit 7: Device Address Enable.

Must be set by firmware before the SIE can respond to USB traffic to the Device Address.

17.2 USB Device Endpoints

The CY7C65113C controller supports up to two addresses and five endpoints for communication with the host. The configuration of these endpoints, and associated FIFOs, is controlled by bits [7,6] of the USB Status and Control Register (*Figure 16-10*). Bit 7 controls the size of the endpoints and bit 6 controls the number of addresses. These configuration options are detailed in *Table 17-1*. Endpoint FIFOs are part of user RAM (as shown in *Section 5.4.1*).

Downloaded from Arrow.com.

Table 17-1. Memory Allocation for Endpoints

USB Status And Control Register (0x1F) Bits [7, 6]											
[0,0]			[1,0]			[0,1]			[1,1]		
Two USB Addresses: A (3 Endpoints) and B (2 Endpoints)			Two USB Addresses: A (3 Endpoints) and B (2 Endpoints)			One USB Address: A (5 Endpoints)			One USB Address: A (5 Endpoints)		
Label	Start Address	Size	Label	Start Address	Size	Label	Start Address	Size	Label	Start Address	Size
EPB1	0xD8	8	EPB0	0xA8	8	EPA4	0xD8	8	EPA3	0xA8	8
EPB0	0xE0	8	EPB1	0xB0	8	EPA3	0xE0	8	EPA4	0xB0	8
EPA2	0xE8	8	EPA0	0xB8	8	EPA2	0xE8	8	EPA0	0xB8	8
EPA1	0xF0	8	EPA1	0xC0	32	EPA1	0xF0	8	EPA1	0xC0	32
EPA0	0xF8	8	EPA2	0xE0	32	EPA0	0xF8	8	EPA2	0xE0	32

When the SIE writes data to a FIFO, the internal data bus is driven by the SIE; not the CPU. This causes a short delay in the CPU operation. The delay is three clock cycles per byte. For example, an 8-byte data write by the SIE to the FIFO generates a delay of 2 µs (3 cycles/byte * 83.33 ns/cycle * 8 bytes).

17.3 USB Control Endpoint Mode Registers

All USB devices are required to have a control endpoint 0 (EPA0 and EPB0) that is used to initialize and control each USB address. Endpoint 0 provides access to the device configuration information and allows generic USB status and control accesses. Endpoint 0 is bidirectional to both receive and transmit data. The other endpoints are unidirectional, but selectable by the user as IN or OUT endpoints.

The endpoint mode registers are cleared during reset. When USB Status And Control Register Bits [6,7] are set to [0,0] or [1,0], the endpoint zero EPA0 and EPB0 mode registers use the format shown in *Figure 17-2*.

USB Device Endpoint Zero Mode (A0, B0) **Addresses 0x12(A0) and 0x42(B0)**

Bit #	7	6	5	4	3	2	1	0
Bit Name	Endpoint 0 SETUP Received	Endpoint 0 IN Received	Endpoint 0 OUT Received	ACK	Mode Bit 3	Mode Bit 2	Mode Bit 1	Mode Bit 0
Read/Write	R/W	R/W	R/W	R/W	R/W	R/W	R/W	R/W
Reset	0	0	0	0	0	0	0	0

Figure 17-2. USB Device Endpoint Zero Mode Registers

Bits[3..0]: Mode.

These sets the mode which control how the control endpoint responds to traffic.

Bit 4: ACK.

This bit is set whenever the SIE engages in a transaction to the register's endpoint that completes with an ACK packet.

Bit 5: Endpoint 0 OUT Received.

1 = Token received is an OUT token. 0 = Token received is not an OUT token. This bit is set by the SIE to report the type of token received by the corresponding device address is an OUT token. The bit must be cleared by firmware as part of the USB processing.

Bit 6: Endpoint 0 IN Received.

1 = Token received is an IN token. 0 = Token received is not an IN token. This bit is set by the SIE to report the type of token received by the corresponding device address is an IN token. The bit must be cleared by firmware as part of the USB processing.

Bit 7: Endpoint 0 SETUP Received.

1 = Token received is a SETUP token. 0 = Token received is not a SETUP token. This bit is set ONLY by the SIE to report the type of token received by the corresponding device address is a SETUP token. Any write to this bit by the CPU will clear it (set it to 0). The bit is forced HIGH from the start of the data packet phase of the SETUP transaction until the start of the ACK packet returned by the SIE. The CPU should not clear this bit during this interval, and subsequently, until the CPU first does an IORD to this endpoint 0 mode register. The bit must be cleared by firmware as part of the USB processing.[4]

Note:

4. In 5-endpoint mode (USB Status And Control Register Bits [7,6] are set to [0,1] or [1,1]), Register 0x42 serves as non-control endpoint 3, and has the format for non-control endpoints shown in *Figure 17-3*.

Downloaded from Arrow.com.

Bits[6:0] of the endpoint 0 mode register are locked from CPU write operations whenever the SIE has updated one of these bits, which the SIE does only at the end of the token phase of a transaction (SETUP... Data... ACK, OUT... Data... ACK, or IN... Data... ACK). The CPU can unlock these bits by doing a subsequent read of this register. Only endpoint 0 mode registers are locked when updated. The locking mechanism does not apply to the mode registers of other endpoints.

Because of these hardware locking features, firmware must perform an IORD after an IOWR to an endpoint 0 register. This verifies that the contents have changed as desired, and that the SIE has not updated these values.

While the SETUP bit is set, the CPU cannot write to the endpoint zero FIFOs. This prevents firmware from overwriting an incoming SETUP transaction before firmware has a chance to read the SETUP data. Refer to *Table 17-1* for the appropriate endpoint zero memory locations.

The Mode bits (bits [3:0]) control how the endpoint responds to USB bus traffic. The mode bit encoding is shown in *Table 18-1*. Additional information on the mode bits can be found in *Table 18-2* and *Table 18-3*.[5]

17.4 USB Non-control Endpoint Mode Registers

The format of the non-control endpoint mode registers is shown in *Figure 17-3*.

USB Non-control Device Endpoint Mode **Addresses 0x14, 0x16, 0x44**

Bit #	7	6	5	4	3	2	1	0
Bit Name	STALL	Reserved	Reserved	ACK	Mode Bit 3	Mode Bit 2	Mode Bit 1	Mode Bit 0
Read/Write	R/W	R/W	R/W	R/W	R/W	R/W	R/W	R/W
Reset	0	0	0	0	0	0	0	0

Figure 17-3. USB Non-control Device Endpoint Mode Registers

Bits[3..0] : Mode.

These sets the mode which control how the control endpoint responds to traffic. The mode bit encoding is shown in *Table 18-1*.

Bit 4 : ACK.

This bit is set whenever the SIE engages in a transaction to the register's endpoint that completes with an ACK packet.

Bits[6..5]: Reserved.

Must be written zero during register writes.

Bit 7: STALL.

If this STALL is set, the SIE stalls an OUT packet if the mode bits are set to ACK-IN, and the SIE stalls an IN packet if the mode bits are set to ACK-OUT. For all other modes, the STALL bit must be a LOW.

17.5 USB Endpoint Counter Registers

There are five Endpoint Counter registers, with identical formats for both control and non-control endpoints. These registers contain byte count information for USB transactions, as well as bits for data packet status. The format of these registers is shown in *Figure 17-4*.

USB Endpoint Counter **Addresses 0x11, 0x13, 0x15, 0x41, 0x43**

Bit #	7	6	5	4	3	2	1	0
Bit Name	Data 0/1 Toggle	Data Valid	Byte Count Bit 5	Byte Count Bit 4	Byte Count Bit 3	Byte Count Bit 2	Byte Count Bit 1	Byte Count Bit 0
Read/Write	R/W	R/W	R/W	R/W	R/W	R/W	R/W	R/W
Reset	0	0	0	0	0	0	0	0

Figure 17-4. USB Endpoint Counter Registers

Bits[5..0]: Byte Count.

These counter bits indicate the number of data bytes in a transaction. For IN transactions, firmware loads the count with the number of bytes to be transmitted to the host from the endpoint FIFO. Valid values are 0 to 32, inclusive. For OUT or SETUP transactions, the count is updated by hardware to the number of data bytes received, plus two for the CRC bytes. Valid values are 2 to 34, inclusive.

Note:

5. The SIE offers an "Ack out – Status in" mode and not an "Ack out – Nak in" mode. Therefore, if following the status stage of a Control Write transfer a USB host were to immediately start the next transfer, the new Setup packet could override the data payload of the data stage of the previous Control Write.

Downloaded from Arrow.com.

Bit 6: Data Valid.

This bit is set on receiving a proper CRC when the endpoint FIFO buffer is loaded with data during transactions. This bit is used OUT and SETUP tokens only. If the CRC is not correct, the endpoint interrupt occurs, but Data Valid is cleared to a zero.

Bit 7: Data 0/1 Toggle.

This bit selects the DATA packet's toggle state: 0 for DATA0, 1 for DATA1. For IN transactions, firmware must set this bit to the desired state. For OUT or SETUP transactions, the hardware sets this bit to the state of the received Data Toggle bit.

Whenever the count updates from a SETUP or OUT transaction on endpoint 0, the counter register locks and cannot be written by the CPU. Reading the register unlocks it. This prevents firmware from overwriting a status update on incoming SETUP or OUT transactions before firmware has a chance to read the data. Only endpoint 0 counter register is locked when updated. The locking mechanism does not apply to the count registers of other endpoints.

17.6 Endpoint Mode/Count Registers Update and Locking Mechanism

The contents of the endpoint mode and counter registers are updated, based on the packet flow diagram in *Figure 17-5*. Two time points, SETUP and UPDATE, are shown in the same figure. The following activities occur at each time point:

SETUP:

The SETUP bit of the endpoint 0 mode register is forced HIGH at this time. This bit is forced HIGH by the SIE until the end of the data phase of a control write transfer. The SETUP bit can not be cleared by firmware during this time.

The affected mode and counter registers of endpoint 0 are locked from any CPU writes once they are updated. These registers can be unlocked by a CPU read, only if the read operation occurs after the UPDATE. The firmware needs to perform a register read as a part of the endpoint ISR processing to unlock the effected registers. The locking mechanism on mode and counter registers ensures that the firmware recognizes the changes that the SIE might have made since the previous IO read of that register.

UPDATE:

1. Endpoint Mode Register – All the bits are updated (except the SETUP bit of the endpoint 0 mode register).
2. Counter Registers – All bits are updated.
3. Interrupt – If an interrupt is to be generated as a result of the transaction, the interrupt flag for the corresponding endpoint is set at this time. For details on what conditions are required to generate an endpoint interrupt, refer to *Table 18-2*.
4. The contents of the updated endpoint 0 mode and counter registers are locked, except the SETUP bit of the endpoint 0 mode register which was locked earlier.

Downloaded from Arrow.com.

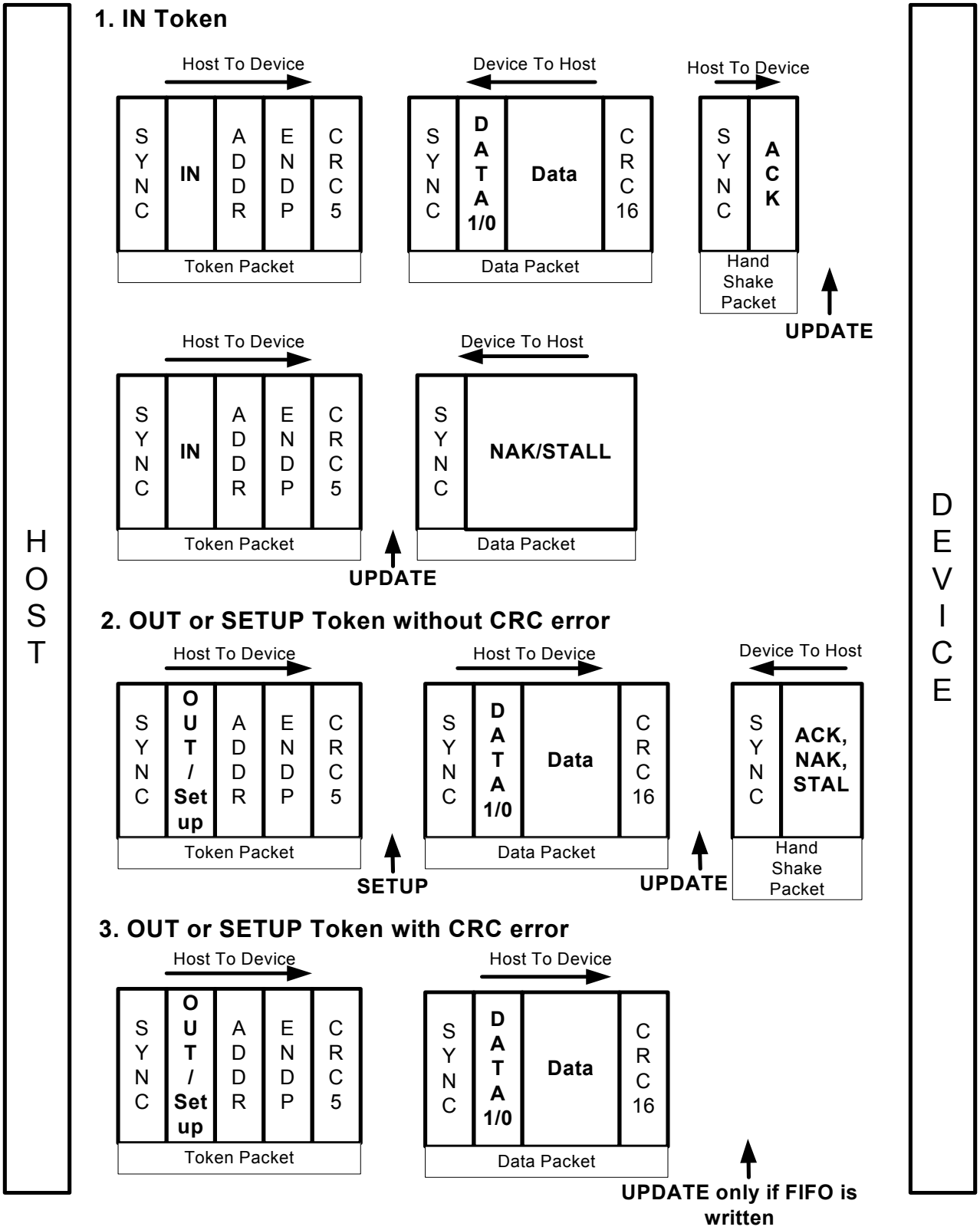

Figure 17-5. Token/Data Packet Flow Diagram

Downloaded from Arrow.com.

18.0 USB Mode Tables

Table 18-1. USB Register Mode Encoding

Moder	Mode Bits	SETUP	IN	OUT	Comments
Disable	0000	ignore	ignore	ignore	Ignore all USB traffic to this endpoint
Nak In/Out	0001	accept	NAK	NAK	Forced from Setup on Control endpoint, from modes other than 0000
Status Out Only	0010	accept	stall	check	For Control endpoints
Stall In/Out	0011	accept	stall	stall	For Control endpoints
Ignore In/Out	0100	accept	ignore	ignore	For Control endpoints
Isochronous Out	0101	ignore	ignore	always	For Isochronous endpoints
Status In Only	0110	accept	TX 0 Byte	stall	For Control Endpoints
Isochronous In	0111	ignore	TX Count	ignore	For Isochronous endpoints
Nak Out	1000	ignore	ignore	NAK	Is set by SIE on an ACK from mode 1001 (Ack Out)
Ack Out(STALL[6]=0) Ack Out(STALL[6]=1)	1001 1001	ignore ignore	ignore ignore	ACK stall	On issuance of an ACK this mode is changed by SIE to 1000 (NAK Out)
Nak Out - Status In	1010	accept	TX 0 Byte	NAK	Is set by SIE on an ACK from mode 1011 (Ack Out – Status In)
Ack Out - Status In	1011	accept	TX 0 Byte	ACK	On issuance of an ACK this mode is changed by SIE to 1010 (NAK Out – Status In)
Nak In	1100	ignore	NAK	ignore	Is set by SIE on an ACK from mode 1101 (Ack In)
Ack IN(STALL[6]=0) Ack IN(STALL[6]=1)	1101 1101	ignore ignore	TX Count stall	ignore ignore	On issuance of an ACK this mode is changed by SIE to 1100 (NAK In)
Nak In - Status Out	1110	accept	NAK	check	Is set by SIE on an ACK from mode 1111 (Ack In – Status Out)
Ack In - Status Out	1111	accept	TX Count	check	On issuance of an ACK this mode is changed by SIE to 1110 (NAK In – Status Out)

Mode

This lists the mnemonic given to the different modes that can be set in the Endpoint Mode Register by writing to the lower nibble (bits 0..3). The bit settings for different modes are covered in the column marked “Mode Bits”. The Status IN and Status OUT represent the Status stage in the IN or OUT transfer involving the control endpoint.

Mode Bits

These column lists the encoding for different modes by setting Bits[3..0] of the Endpoint Mode register. This modes represents how the SIE responds to different tokens sent by the host to an endpoint. For instance, if the mode bits are set to “0001” (NAK IN/OUT), the SIE will respond with an

- ACK on receiving a SETUP token from the host.
- NAK on receiving an OUT token from the host.
- NAK on receiving an IN token from the host.

Refer to *Section 13.0* for more information on the SIE functioning.

SETUP, IN, and OUT

These columns shows the SIE’s response to the host on receiving a SETUP, IN and OUT token depending on the mode set in the Endpoint Mode Register.

A “Check” on the OUT token column, implies that on receiving an OUT token the SIE checks to see whether the OUT packet is of zero length and has a Data Toggle (DTOG) set to ‘1.’ If the DTOG bit is set and the received OUT Packet has zero length, the OUT is ACKed to complete the transaction. If either of this condition is not met the SIE will respond with a STALLL or just ignore the transaction.

A “TX Count” entry in the IN column implies that the SIE transmit the number of bytes specified in the Byte Count (bits 3..0 of the Endpoint Count Register) to the host in response to the IN token received.

A “TX0 Byte” entry in the IN column implies that the SIE transmit a zero length byte packet in response to the IN token received from the host.

An “Ignore” in any of the columns means that the device will not send any handshake tokens (no ACK) to the host.

An “Accept” in any of the columns means that the device will respond with an ACK to a valid SETUP transaction to the host.

Note:

6. STALL bit is bit 7 of the USB Non-control Device Endpoint Mode registers. For more information, refer to Section 17.4.

Downloaded from Arrow.com.

Comments

Some Mode Bits are automatically changed by the SIE in response to certain USB transactions. For example, if the Mode Bits [3:0] are set to '1111' which is ACK IN-Status OUT mode as shown in *Table 18-1*, the SIE will change the endpoint Mode Bits [3:0] to NAK IN-Status OUT mode (1110) after ACK'ing a valid status stage OUT token. The firmware needs to update the mode for the SIE to respond appropriately. See *Table 18-1* for more details on what modes will be changed by the SIE. A disabled endpoint will remain disabled until changed by firmware, and all endpoints reset to the disabled mode (0000). Firmware normally enables the endpoint mode after a SetConfiguration request.

Any SETUP packet to an enabled endpoint with mode set to accept SETUPs will be changed by the SIE to 0001 (NAKing INs and OUTs). Any mode set to accept a SETUP will send an ACK handshake to a valid SETUP token.

The control endpoint has three status bits for identifying the token type received (SETUP, IN, or OUT), but the endpoint must be placed in the correct mode to function as such. Non-control endpoints should not be placed into modes that accept SETUPs. Note that most modes that control transactions involving an ending ACK, are changed by the SIE to a corresponding mode which NAKs subsequent packets following the ACK. Exceptions are modes 1010 and 1110

Table 18-2. Decode table for *Table 18-3*: "Details of Modes for Differing Traffic Condition

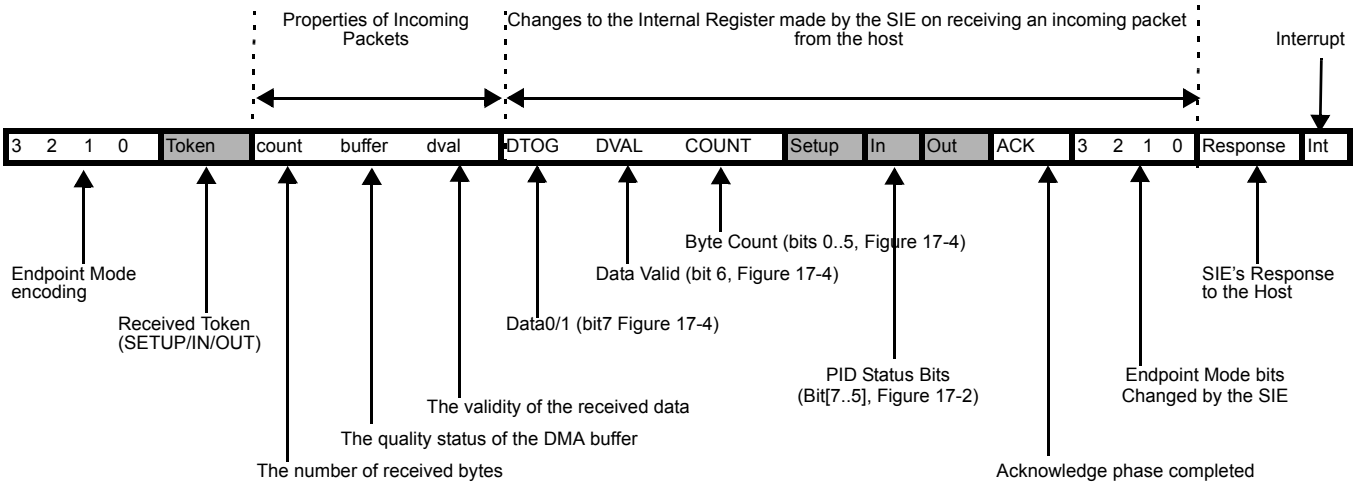

Legend:

TX : transmit	UC : unchanged
RX : receive	TX0 :Transmit 0 length packet
	available for Control endpoint only
x: don't care	

The response of the SIE can be summarized as follows:

1. The SIE will only respond to valid transactions, and will ignore non-valid ones.
2. The SIE will generate an interrupt when a valid transaction is completed or when the FIFO is corrupted. FIFO corruption occurs during an OUT or SETUP transaction to a valid internal address, that ends with a non-valid CRC.
3. An incoming Data packet is valid if the count is ≤ Endpoint Size + 2 (includes CRC) and passes all error checking;
4. An IN will be ignored by an OUT configured endpoint and visa versa.
5. The IN and OUT PID status is updated at the end of a transaction.
6. The SETUP PID status is updated at the beginning of the Data packet phase.
7. The entire Endpoint 0 mode register and the Count register are locked to CPU writes at the end of any transaction to that endpoint in which an ACK is transferred. These registers are only unlocked by a CPU read of the register, which should be done by the firmware only after the transaction is complete. This represents about a 1-µs window in which the CPU is locked from register writes to these USB registers. Normally the firmware should perform a register read at the beginning of the Endpoint ISRs to unlock and get the mode register information. The interlock on the Mode and Count registers ensures that the firmware recognizes the changes that the SIE might have made during the previous transaction. Note that the setup bit of the mode register is NOT locked. This means that before writing to the mode register, firmware must first read the register to make sure that the setup bit is not set (which indicates a setup was received, while processing the current USB request). This read will of course unlock the register. So care must be taken not to overwrite the register elsewhere.

Downloaded from Arrow.com.

Table 18-3. Details of Modes for Differing Traffic Conditions (see *Table 18-2* for the decode legend)

SETUP (if accepting SETUPs)																		
Properties of Incoming Packet								**Changes made by SIE to Internal Registers and Mode Bits**										
Mode Bits				**token**	**count**	**buffer**	**dval**	**DTOG**	**DVAL**	**COUNT**	**Setup**	**In**	**Out**	**ACK**	**Mode Bits**				**Response**	**Intr**
See *Table 18-1*				Setup	<= 10	data	valid	updates	1	updates	1	UC	UC	1	0	0	0	1	ACK	yes
See *Table 18-1*				Setup	> 10	junk	x	updates	updates	updates	1	UC	UC	UC	NoChange				ignore	yes
See *Table 18-1*				Setup	x	junk	invalid	updates	0	updates	1	UC	UC	UC	NoChange				ignore	yes
Properties of Incoming Packet								**Changes made by SIE to Internal Registers and Mode Bits**										
Mode Bits				**token**	**count**	**buffer**	**dval**	**DTOG**	**DVAL**	**COUNT**	**Setup**	**In**	**Out**	**ACK**	**Mode Bits**				**Response**	**Intr**
DISABLED																				
0	0	0	0	x	x	UC	x	UC	UC	UC	UC	UC	UC	UC	NoChange				ignore	no
Nak In/Out																				
0	0	0	1	Out	x	UC	x	UC	UC	UC	UC	UC	1	UC	NoChange				NAK	yes
0	0	0	1	In	x	UC	x	UC	UC	UC	UC	1	UC	UC	NoChange				NAK	yes
Ignore In/Out																				
0	1	0	0	Out	x	UC	x	UC	UC	UC	UC	UC	UC	UC	NoChange				ignore	no
0	1	0	0	In	x	UC	x	UC	UC	UC	UC	UC	UC	UC	NoChange				ignore	no
Stall In/Out																				
0	0	1	1	Out	x	UC	x	UC	UC	UC	UC	UC	1	UC	NoChange				Stall	yes
0	0	1	1	In	x	UC	x	UC	UC	UC	UC	1	UC	UC	NoChange				Stall	yes
CONTROL WRITE																				
Properties of Incoming Packet								**Changes made by SIE to Internal Registers and Mode Bits**										
Mode Bits				**token**	**count**	**buffer**	**dval**	**DTOG**	**DVAL**	**COUNT**	**Setup**	**In**	**Out**	**ACK**	**Mode Bits**				**Response**	**Intr**
Normal Out/premature status In																				
1	0	1	1	Out	<= 10	data	valid	updates	1	updates	UC	UC	1	1	1	0	1	0	ACK	yes
1	0	1	1	Out	> 10	junk	x	updates	updates	updates	UC	UC	1	UC	NoChange				ignore	yes
1	0	1	1	Out	x	junk	invalid	updates	0	updates	UC	UC	1	UC	NoChange				ignore	yes
1	0	1	1	In	x	UC	x	UC	UC	UC	UC	1	UC	1	NoChange				TX 0	yes
NAK Out/premature status In																				
1	0	1	0	Out	<= 10	UC	valid	UC	UC	UC	UC	UC	1	UC	NoChange				NAK	yes
1	0	1	0	Out	> 10	UC	x	UC	UC	UC	UC	UC	UC	UC	NoChange				ignore	no
1	0	1	0	Out	x	UC	invalid	UC	UC	UC	UC	UC	UC	UC	NoChange				ignore	no
1	0	1	0	In	x	UC	x	UC	UC	UC	UC	1	UC	1	NoChange				TX 0	yes
Status In/extra Out																				
0	1	1	0	Out	<= 10	UC	valid	UC	UC	UC	UC	UC	1	UC	0	0	1	1	Stall	yes
0	1	1	0	Out	> 10	UC	x	UC	UC	UC	UC	UC	UC	UC	NoChange				ignore	no
0	1	1	0	Out	x	UC	invalid	UC	UC	UC	UC	UC	UC	UC	NoChange				ignore	no
0	1	1	0	In	x	UC	x	UC	UC	UC	UC	1	UC	1	NoChange				TX 0	yes
CONTROL READ																				
Properties of Incoming Packet								**Changes made by SIE to Internal Registers and Mode Bits**										
Mode Bits				**token**	**count**	**buffer**	**dval**	**DTOG**	**DVAL**	**COUNT**	**Setup**	**In**	**Out**	**ACK**	**Mode Bits**				**Response**	**Intr**
Normal In/premature status Out																				
1	1	1	1	Out	2	UC	valid	1	1	updates	UC	UC	1	1	NoChange				ACK	yes
1	1	1	1	Out	2	UC	valid	0	1	updates	UC	UC	1	UC	0	0	1	1	Stall	yes
1	1	1	1	Out	!=2	UC	valid	updates	1	updates	UC	UC	1	UC	0	0	1	1	Stall	yes
1	1	1	1	Out	> 10	UC	x	UC	UC	UC	UC	UC	UC	UC	NoChange				ignore	no
1	1	1	1	Out	x	UC	invalid	UC	UC	UC	UC	UC	UC	UC	NoChange				ignore	no
1	1	1	1	In	x	UC	x	UC	UC	UC	UC	1	UC	1	1	1	1	0	ACK (back)	yes
Nak In/premature status Out																				
1	1	1	0	Out	2	UC	valid	1	1	updates	UC	UC	1	1	NoChange				ACK	yes
1	1	1	0	Out	2	UC	valid	0	1	updates	UC	UC	1	UC	0	0	1	1	Stall	yes
1	1	1	0	Out	!=2	UC	valid	updates	1	updates	UC	UC	1	UC	0	0	1	1	Stall	yes
1	1	1	0	Out	> 10	UC	x	UC	UC	UC	UC	UC	UC	UC	NoChange				ignore	no
1	1	1	0	Out	x	UC	invalid	UC	UC	UC	UC	UC	UC	UC	NoChange				ignore	no
1	1	1	0	In	x	UC	x	UC	UC	UC	UC	1	UC	UC	NoChange				NAK	yes
Status Out/extra In																				
0	0	1	0	Out	2	UC	valid	1	1	updates	UC	UC	1	1	NoChange				ACK	yes
0	0	1	0	Out	2	UC	valid	0	1	updates	UC	UC	1	UC	0	0	1	1	Stall	yes

Downloaded from Arrow.com.

Table 18-3. Details of Modes for Differing Traffic Conditions (see *Table 18-2* for the decode legend) (continued)

0	0	1	0	Out	!=2	UC	valid	updates	1	updates	UC	UC	1	UC	0	0	1	1	Stall	yes
0	0	1	0	Out	> 10	UC	x	UC	UC	UC	UC	UC	UC	UC	NoChange				ignore	no
0	0	1	0	Out	x	UC	invalid	UC	UC	UC	UC	1	UC	UC	NoChange				ignore	no
0	0	1	0	In	x	UC	x	UC	UC	UC	UC	1	UC	UC	0	0	1	1	Stall	yes
OUT ENDPOINT																				
Properties of Incoming Packet								**Changes made by SIE to Internal Registers and Mode Bits**												
Mode Bits				**token**	**count**	**buffer**	**dval**	**DTOG**	**DVAL**	**COUNT**	**Setup**	**In**	**Out**	**ACK**	**Mode Bits**				**Response**	**Intr**
Normal Out/erroneous In																				
1	0	0	1	Out	<= 10	data	valid	updates	1	updates	UC	UC	1	1	1	0	0	0	ACK	yes
1	0	0	1	Out	> 10	junk	x	updates	updates	updates	UC	UC	1	UC	NoChange				ignore	yes
1	0	0	1	Out	x	junk	invalid	updates	0	updates	UC	UC	1	UC	NoChange				ignore	yes
1	0	0	1	In	x	UC	x	UC	UC	UC	UC	UC	UC	UC	NoChange				ignore	no
																			(STALL[6] = 0)	
1	0	0	1	In	x	UC	x	UC	UC	UC	UC	UC	UC	UC	NoChange				Stall	no
																			(STALL[6] = 1)	
NAK Out/erroneous In																				
1	0	0	0	Out	<= 10	UC	valid	UC	UC	UC	UC	UC	1	UC	NoChange				NAK	yes
1	0	0	0	Out	> 10	UC	x	UC	UC	UC	UC	UC	UC	UC	NoChange				ignore	no
1	0	0	0	Out	x	UC	invalid	UC	UC	UC	UC	UC	UC	UC	NoChange				ignore	no
1	0	0	0	In	x	UC	x	UC	UC	UC	UC	UC	UC	UC	NoChange				ignore	no
Isochronous endpoint (Out)																				
0	1	0	1	Out	x	updates	updates	updates	updates	updates	UC	UC	1	1	NoChange				RX	yes
0	1	0	1	In	x	UC	x	UC	UC	UC	UC	UC	UC	UC	NoChange				ignore	no
IN ENDPOINT																				
Properties of Incoming Packet								**Changes made by SIE to Internal Registers and Mode Bits**												
Mode Bits				**token**	**count**	**buffer**	**dval**	**DTOG**	**DVAL**	**COUNT**	**Setup**	**In**	**Out**	**ACK**	**Mode Bits**				**Response**	**Intr**
Normal In/erroneous Out																				
1	1	0	1	Out	x	UC	x	UC	UC	UC	UC	UC	UC	UC	NoChange				ignore	no
																			(STALL[6] = 0)	
1	1	0	1	Out	x	UC	x	UC	UC	UC	UC	UC	UC	UC	NoChange				stall	no
																			(STALL[6] = 1)	
1	1	0	1	In	x	UC	x	UC	UC	UC	UC	1	UC	1	1	1	0	0	ACK (back)	yes
NAK In/erroneous Out																				
1	1	0	0	Out	x	UC	x	UC	UC	UC	UC	UC	UC	UC	NoChange				ignore	no
1	1	0	0	In	x	UC	x	UC	UC	UC	UC	1	UC	UC	NoChange				NAK	yes
Isochronous endpoint (In)																				
0	1	1	1	Out	x	UC	x	UC	UC	UC	UC	UC	UC	UC	NoChange				ignore	no
0	1	1	1	In	x	UC	x	UC	UC	UC	UC	1	UC	UC	NoChange				TX	yes

Downloaded from Arrow.com.

19.0 Register Summary

	Address	Register Name	Bit 7	Bit 6	Bit 5	Bit 4	Bit 3	Bit 2	Bit 1	Bit 0	Read/Write/Both/–[7]	Default/Reset
GPIO CONFIGURATION PORTS 0 AND 1	0x00	Port 0 Data	P0.7	P0.6	P0.5	P0.4	P0.3	P0.2	P0.1	P0.0	BBBBBBBB	11111111
	0x01	Port 1 Data	P1.7	P1.6	P1.5	P1.4	P1.3	P1.2	P1.1	P1.0	BBBBBBBB	11111111
	0x02	Port 2 Data	P2.7	P2.6	P2.5	P2.4	P2.3	P2.2	P2.1	P2.0	BBBBBBBB	11111111
	0x03	Port 3 Data	P3.7	P3.6	P3.5	P3.4	P3.3	P3.2	P3.1	P3.0	BBBBBBBB	11111111
	0x04	Port 0 Interrupt Enable	P0.7 Intr Enable	P0.6 Intr Enable	P0.5 Intr Enable	P0.4 Intr Enable	P0.3 Intr Enable	P0.2 Intr Enable	P0.1 Intr Enable	P0.0 Intr Enable	WWWWWWWW	00000000
	0x05	Port 1 Interrupt Enable	P1.7 Intr Enable	P1.6 Intr Enable	P1.5 Intr Enable	P1.4 Intr Enable	Reserved	P1.2 Intr Enable	P1.1 Intr Enable	P1.0 Intr Enable	WWWWWWWW	00000000
	0x08	GPIO Configuration	Reserved	Reserved	Reserved	Reserved	Port 1 Config Bit 1	Port 1 Config Bit 0	Port 0 Config Bit 1	Port 0 Config Bit 0	BBBBBBBB	00000000
HAPI I²C	0x09	HAPI/I²C Configuration	I²C Position	Reserved	Reserved	Reserved	Reserved	Reserved	I²C Port Width	Reserved	BBBBBBBB	00000000
ENDPOINT A0, A1 AND A2 CONFIGURATION	0x10	USB Device Address A	Device Address A Enable	Device Address A Bit 6	Device Address A Bit 5	Device Address A Bit 4	Device Address A Bit 3	Device Address A Bit 2	Device Address A Bit 1	Device Address A Bit 0	BBBBBBBB	00000000
	0x11	EP A0 Counter Register	Data 0/1 Toggle	Data Valid	Byte Count Bit 5	Byte Count Bit 4	Byte Count Bit 3	Byte Count Bit 2	Byte Count Bit 1	Byte Count Bit 0	BBBBBBBB	00000000
	0x12	EP A0 Mode Register	Endpoint0 SETUP Received	Endpoint0 IN Received	Endpoint0 OUT Received	ACK	Mode Bit 3	Mode Bit 2	Mode Bit 1	Mode Bit 0	BBBBBBBB	00000000
	0x13	EP A1 Counter Register	Data 0/1 Toggle	Data Valid	Byte Count Bit 5	Byte Count Bit 4	Byte Count Bit 3	Byte Count Bit 2	Byte Count Bit 1	Byte Count Bit 0	BBBBBBBB	00000000
	0x14	EP A1 Mode Register	STALL	-	-	ACK	Mode Bit 3	Mode Bit 2	Mode Bit 1	Mode Bit 0	BBBBBBBB	00000000
	0x15	EP A2 Counter Register	Data 0/1 Toggle	Data Valid	Byte Count Bit 5	Byte Count Bit 4	Byte Count Bit 3	Byte Count Bit 2	Byte Count Bit 1	Byte Count Bit 0	BBBBBBBB	00000000
	0x16	EP A2 Mode Register	STALL	-	-	ACK	Mode Bit 3	Mode Bit 2	Mode Bit 1	Mode Bit 0	BBBBBBBB	00000000
USB-CS	0x1F	USB Status and Control	Endpoint Size	Endpoint Mode	D+ Upstream	D– Upstream	Bus Activity	Control Bit 2	Control Bit 1	Control Bit 0	BBRRBBBB	-0xx0000
INTERRUPT	0x20	Global Interrupt Enable	Reserved	I²C Interrupt Enable	GPIO Interrupt Enable	Reserved	USB Hub Interrupt Enable	1.024-ms Interrupt Enable	128-µs Interrupt Enable	USB Bus RESET Interrupt Enable	-BBBBBBB	-0000000
	0x21	Endpoint Interrupt Enable	Reserved	Reserved	Reserved	EPB1 Interrupt Enable	EPB0 Interrupt Enable	EPA2 Interrupt Enable	EPA1 Interrupt Enable	EPA0 Interrupt Enable	---BBBBB	---00000
TIMER	0x24	Timer (LSB)	Timer Bit 7	Timer Bit 6	Timer Bit 5	Timer Bit 4	Timer Bit 3	Timer Bit 2	Timer Bit 1	Timer Bit 0	RRRRRRRR	00000000
	0x25	Timer (MSB)	Reserved	Reserved	Reserved	Reserved	Timer Bit 11	Timer Bit 10	Time Bit 9	Timer Bit 8	----rrrr	----0000
I²C	0x28	I²C Control and Status	MSTR Mode	Continue/ Busy	Xmit Mode	ACK	Addr	ARB Lost/ Restart	Received Stop	I²C Enable	BBBBBBBB	00000000
	0x29	I²C Data	I²C Data 7	I²C Data 6	I²C Data 5	I²C Data 4	I²C Data 3	I²C Data 2	I²C Data 1	I²C Data 0	BBBBBBBB	xxxxxxxx
ENDPOINT B0, B1 CONFIGURATION	0x40	USB Device Address B	Device Address B Enable	Device Address B Bit 6	Device Address B Bit 5	Device Address B Bit 4	Device Address B Bit 3	Device Address B Bit 2	Device Address B Bit 1	Device Address B Bit 0	BBBBBBBB	00000000
	0x41	EP B0 Counter Register	Data 0/1 Toggle	Data Valid	Byte Count Bit 5	Byte Count Bit 4	Byte Count Bit 3	Byte Count Bit 2	Byte Count Bit 1	Byte Count Bit 0	BBBBBBBB	00000000
	0x42	EP B0 Mode Register	Endpoint 0 SETUP Received	Endpoint 0 IN Received	Endpoint 0 OUT Received	ACK	Mode Bit 3	Mode Bit 2	Mode Bit 1	Mode Bit 0	BBBBBBBB	00000000
	0x43	EP B1 Counter Register	Data 0/1 Toggle	Data Valid	Byte Count Bit 5	Byte Count Bit 4	Byte Count Bit 3	Byte Count Bit 2	Byte Count Bit 1	Byte Count Bit 0	BBBBBBBB	00000000
	0x44	EP B1 Mode Register	STALL	-	-	ACK	Mode Bit 3	Mode Bit 2	Mode Bit 1	Mode Bit 0	BBBBBBBB	00000000

Note:

7. B: Read and Write; W: Write; R: Read.

Downloaded from Arrow.com.

19.0 Register Summary (continued)

	Address	Register Name	Bit 7	Bit 6	Bit 5	Bit 4	Bit 3	Bit 2	Bit 1	Bit 0	Read/Write/Both/–[7]	Default/Reset
HUB PORT CONTROL, STATUS, SUSPEND RESUME, SE0, FORCE LOW	0x48	Hub Port Connect Status	Reserved	Reserved	Reserved	Reserved	Port 4 Connect Status	Port 3 Connect Status	Port 2 Connect Status	Port 1 Connect Status	BBBBBBBB	00000000
HUB PORT CONTROL, STATUS, SUSPEND RESUME, SE0, FORCE LOW	0x49	Hub Port Enable	Reserved	Reserved	Reserved	Reserved	Port 4 Enable	Port 3 Enable	Port 2 Enable	Port 1 Enable	BBBBBBBB	00000000
	0x4A	Hub Port Speed	Reserved	Reserved	Reserved	Reserved	Port 4 Speed	Port 3 Speed	Port 2 Speed	Port 1 Speed	BBBBBBBB	00000000
	0x4B	Hub Port Control (Ports 4:1)	Port 4 Control Bit 1	Port 4 Control Bit 0	Port 3 Control Bit 1	Port 3 Control Bit 0	Port 2 Control Bit 1	Port 2 Control Bit 0	Port 1 Control Bit 1	Port 1 Control Bit 0	BBBBBBBB	00000000
	0x4D	Hub Port Suspend	Device Remote Wakeup	Reserved	Reserved	Reserved	Port 4 Selective Suspend	Port 3 Selective Suspend	Port 2 Selective Suspend	Port 1 Selective Suspend	BBBBBBBB	00000000
	0x4E	Hub Port Resume Status	Reserved	Reserved	Reserved	Reserved	Resume 4	Resume 3	Resume 2	Resume 1	-RRRRRRR	00000000
	0x4F	Hub Port SE0 Status	Reserved	Reserved	Reserved	Reserved	Port 4 SE0 Status	Port 3 SE0 Status	Port 2 SE0 Status	Port 1 SE0 Status	RRRRRRRR	00000000
	0x50	Hub Ports Data	Reserved	Reserved	Reserved	Reserved	Port 4 Diff. Data	Port 3 Diff. Data	Port 2 Diff. Data	Port 1 Diff. Data	RRRRRRRR	00000000
	0x51	Hub Port Force Low (Ports 4:1)	Force Low D+[4]	Force Low D–[4]	Force Low D+[3]	Force Low D–[3]	Force Low D+[2]	Force Low D–[2]	Force Low D+[1]	Force Low D–[1]	BBBBBBBB	00000000
	0xFF	Process Status & Control	IRQ Pending	Watchdog Reset	USB Bus Reset Interrupt	Power-on Reset	Suspend	Interrupt Enable Sense	Reserved	Run	RBBBBRBB	00010001

Downloaded from Arrow.com.

20.0 Sample Schematic

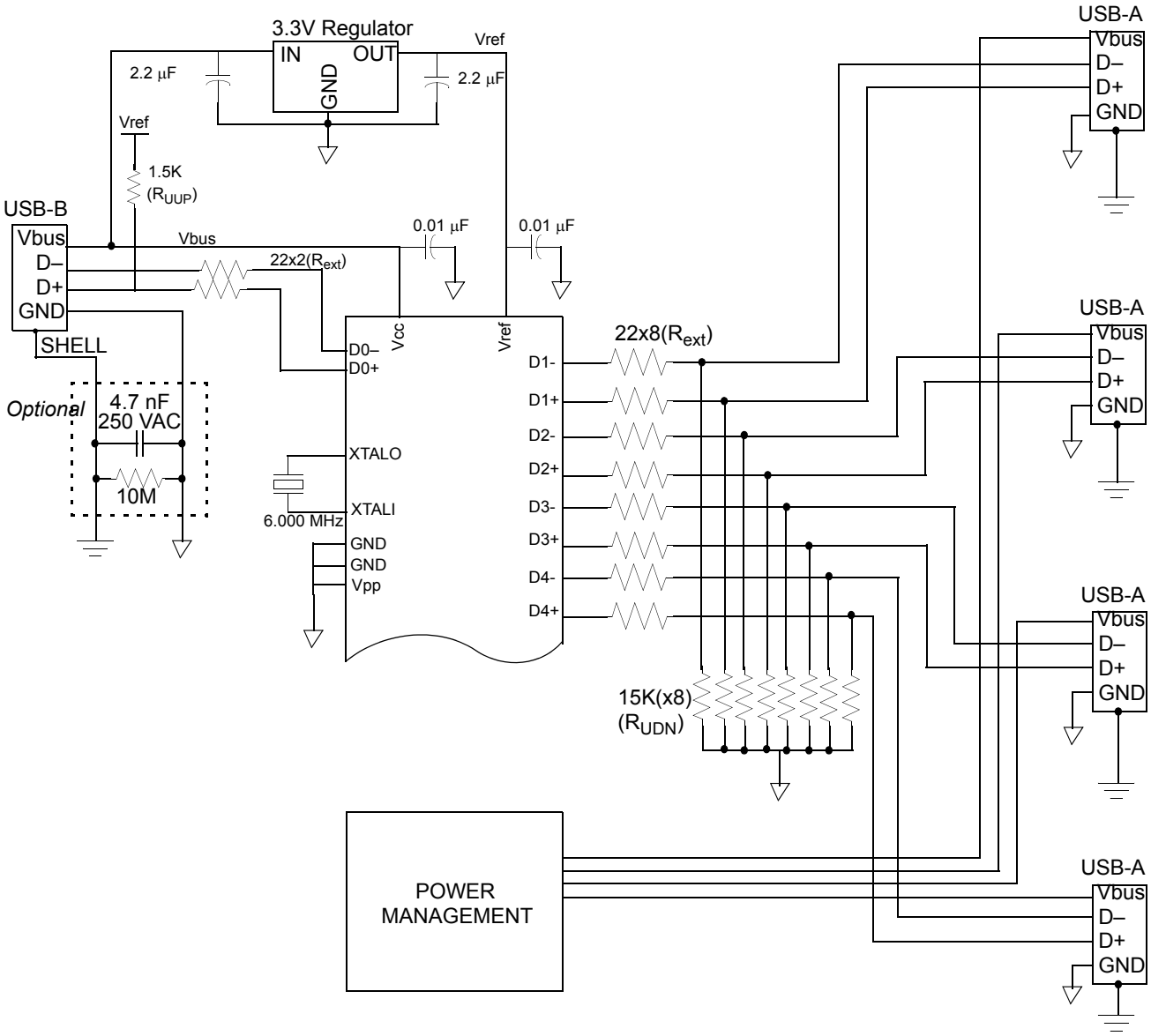

21.0 Absolute Maximum Ratings

Storage Temperature ..... –65°C to +150°C
Ambient Temperature with Power Applied ..... 0°C to +70°C
Supply voltage on V_{CC} relative to V_{SS} ..... –0.5V to +7.0V
DC Input Voltage ..... –0.5V to +V_{CC} + 0.5V
DC Voltage applied to Outputs in High Z State ..... –0.5V to +V_{CC} + 0.5V
Power Dissipation ..... 500 mW
Static Discharge Voltage ..... > 2000V
Latch-up Current ..... > 200 mA
Max Output Sink Current into Port 0, 1 ..... 60 mA
Max Output Sink Current into DAC[7:2] Pins ..... 10 mA
Max Output Source Current from Port 1, 2, 3, 4, 5, 6, 7 ..... 30 mA

Downloaded from Arrow.com.

22.0 Electrical Characteristics

f_{OSC} = 6 MHz; Operating Temperature = 0 to 70°C, V_{CC} = 4.0V to 5.25V

Parameter	Description	Conditions	Min.	Max.	Unit
General					
V_{REF}	Reference Voltage	3.3V ±5%	3.15	3.45	V
V_{pp}	Programming Voltage (disabled)		–0.4	0.4	V
I_{CC}	V_{CC} Operating Current	No GPIO source current		50	mA
I_{SB1}	Supply Current—Suspend Mode			50	µA
I_{ref}	V_{REF} Operating Current	No USB Traffic[8]		10	mA
I_{il}	Input Leakage Current	Any pin		1	µA
USB Interface					
V_{di}	Differential Input Sensitivity	| (D+)–(D–) |	0.2		V
V_{cm}	Differential Input Common Mode Range		0.8	2.5	V
V_{se}	Single Ended Receiver Threshold		0.8	2.0	V
C_{in}	Transceiver Capacitance			20	pF
I_{lo}	Hi-Z State Data Line Leakage	0V < V_{in} < 3.3V	–10	10	µA
R_{ext}	External USB Series Resistor	In series with each USB pin	19	21	Ω
R_{UUP}	External Upstream USB Pull-up Resistor	1.5 kΩ ±5%, D+ to V_{REG}	1.425	1.575	kΩ
R_{UDN}	External Downstream Pull-down Resistors	15 kΩ ±5%, downstream USB pins	14.25	15.75	kΩ
Power-on Reset					
t_{vccs}	V_{CC} Ramp Rate	Linear ramp 0V to V_{CC}[9]	0	100	ms
USB Upstream/Downstream Port					
V_{UOH}	Static Output High	15 kΩ ±5% to Gnd	2.8	3.6	V
V_{UOL}	Static Output Low	1.5 kΩ ±5% to V_{REF}		0.3	V
Z_O	USB Driver Output Impedance	Including R_{ext} Resistor	28	44	Ω
General Purpose I/O (GPIO)					
R_{up}	Pull-up Resistance (typical 14 kΩ)		8.0	24.0	kΩ
V_{ITH}	Input Threshold Voltage	All ports, low-to-high edge	20%	40%	V_{CC}
V_H	Input Hysteresis Voltage	All ports, high-to-low edge	2%	8%	V_{CC}
V_{OL}	Port 0,1 Output Low Voltage	I_{OL} = 3 mA I_{OL} = 8 mA		0.4 2.0	V V
V_{OH}	Output High Voltage	I_{OH} = 1.9 mA (all ports 0,1)	2.4		V

Notes:
8. Add 18 mA per driven USB cable (upstream or downstream. This is based on transitions every 2 full-speed bit times on average.
9. Power-on Reset occurs whenever the voltage on V_{CC} is below approximately 2.5V.

Downloaded from Arrow.com.

23.0 Switching Characteristics (f_{OSC} = 6.0 MHz)

Parameter	Description	Min.	Max.	Unit
	Clock Source			
f_{OSC}	Clock Rate	6 ±0.25%		MHz
t_{cyc}	Clock Period	166.25	167.08	ns
t_{CH}	Clock HIGH time	0.45 t_{CYC}		ns
t_{CL}	Clock LOW time	0.45 t_{CYC}		ns
	USB Full-speed Signaling[10]			
t_{rfs}	Transition Rise Time	4	20	ns
t_{ffs}	Transition Fall Time	4	20	ns
t_{rfmfs}	Rise/Fall Time Matching; (t_r/t_f)	90	111	%
$t_{dratefs}$	Full Speed Date Rate	12 ±0.25%		Mb/s
	Timer Signals			
t_{watch}	Watchdog Timer Period	8.192	14.336	ms

Note:
10. Per Table 7-6 of revision 1.1 of USB specification.

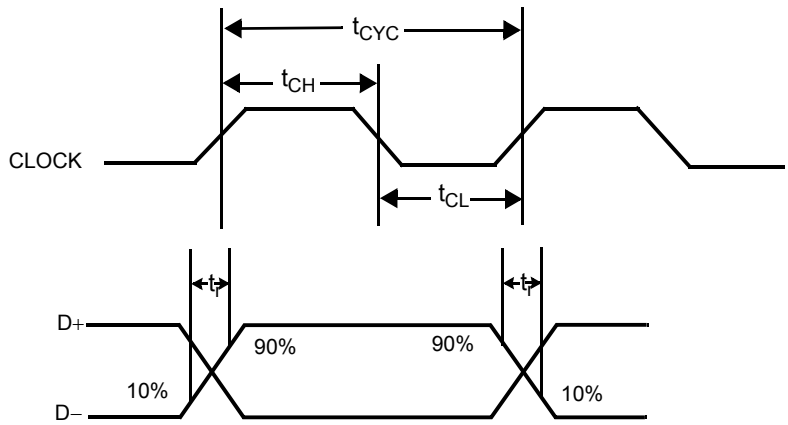

Downloaded from Arrow.com.

24.0 Ordering Information

Ordering Code	PROM Size	Package Type	Operating Range
CY7C65113C-SXC	8 KB	28-pin SOIC	Commercial
CY7C65113C-SXCT	8 KB	28-pin SOIC-Tape Reel	Commercial

25.0 Package Diagram

28-Lead (300-Mil) Molded SOIC

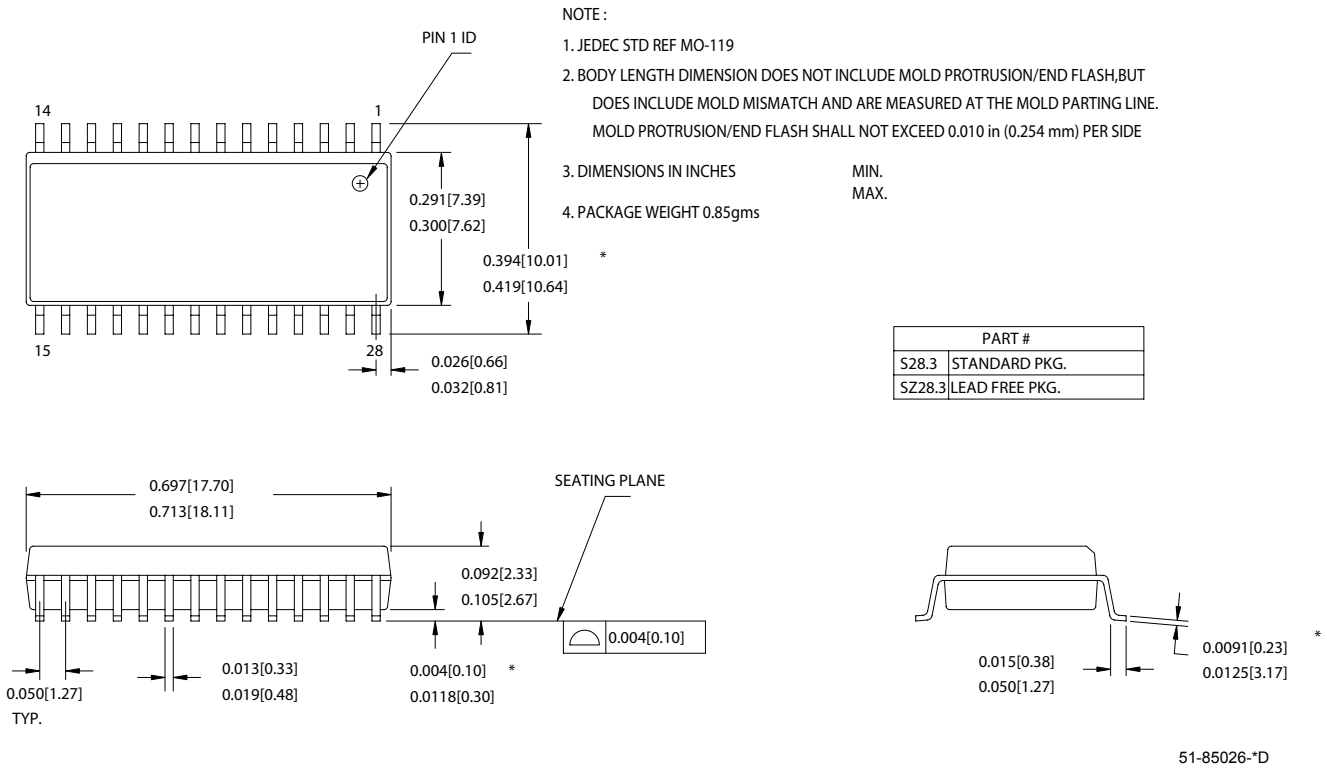

Purchase of I^{2}C components from Cypress, or one of its sublicensed Associated Companies, conveys a license under the Philips I^{2}C Patent Rights to use these components in an I^{2}C system, provided that the system conforms to the I^{2}C Standard Specification as defined by Philips. All product and company names mentioned in this document are the trademarks of their respective holders.

© Cypress Semiconductor Corporation, 2006. The information contained herein is subject to change without notice. Cypress Semiconductor Corporation assumes no responsibility for the use of any circuitry other than circuitry embodied in a Cypress product. Nor does it convey or imply any license under patent or other rights. Cypress products are not warranted nor intended to be used for medical, life support, life saving, critical control or safety applications, unless pursuant to an express written agreement with Cypress. Furthermore, Cypress does not authorize its products for use as critical components in life-support systems where a malfunction or failure may reasonably be expected to result in significant injury to the user. The inclusion of Cypress products in life-support systems application implies that the manufacturer assumes all risk of such use and in doing so indemnifies Cypress against all charges.

Downloaded from Arrow.com.

Document History Page

Document Title: CY7C65113C USB Hub with Microcontroller Document Number: 38-08002				
REV.	**ECN NO.**	**Issue Date**	**Orig. of Change**	**Description of Change**
**	109965	02/22/02	SZV	Change from Spec number: 38-00590 to 38-08002
*A	120372	12/17/02	MON	Added register bit definitions. Added default bit state of each register. Corrected the Schematic (location of the pull-up on D+). Corrected the Logical Diagram (removed the extra GPIO Port 1). Added register summary. Modified *Figure 17-5*, more labeling. Removed information on the availability of the part in PDIP package. Modified *Table 18-1* and provided more explanation regarding locking/unlocking mechanism of the mode register. Removed any information regarding the speed detect bit in Hub Port Speed register being set by hardware.
*B	124522	03/13/03	MON	Fixed the figure on page 42 regarding the update of mode registers. The arrows in the figure were misplaced and the figure was unreadable. This is an important figure for understanding mode register functioning.
*C	368601	See ECN	BHA	Added Lead-free Package Information. Removed CY7C65013 Information. Updated Package Drawing.
*D	429098	See ECN	TYJ	Part numbers changed to ‘C’ types Cypress Perform logo added Part numbers updated in the ordering section

Downloaded from Arrow.com.