CML Microcircuits

COMMUNICATION SEMICONDUCTORS

# CMX881

## Baseband Processor for PMR and Trunked Radios

D/881/17 April 2009

### *Full-Feature Audio-Processing, Signalling and Data for Half Duplex Dual-Mode Analogue PMR and Trunked Radios*

## Features

- Automatic signal type scanning and IRQ on detection of valid Rx signals, level or RSSI
- Tone generator for caller recognition tunes
- Programmable powerdown control
- Programmable signal detection thresholds
- Low Power operation with 'Zero Power' mode
- Uncommitted Aux ADC with switchable input to monitor signals
- Meets ETS 300 086, MPT1327, PAA1382 and ETS 300 230 specifications
- Voice processing facilities, including Tx and Rx gain setting and voice/subaudio filtering
- C-BUS serial host interface
- RF interface allowing 1 or 2 point modulation
- Programmable soft limiter
- Programmable Selcall Codec
- Zero 'Talkdown' CTCSS decoder performance prevents dropouts
- DTMF transmitter
- Standard (39-tone) CTCSS and 23/24 bit DCS Codecs
- Robust half-duplex FFSK/MSK modem, 1200/2400bps with CRC and parity generator/checker, gets data through when signal is too degraded for voice – for text messaging/paging, location transfer, etc. applications.

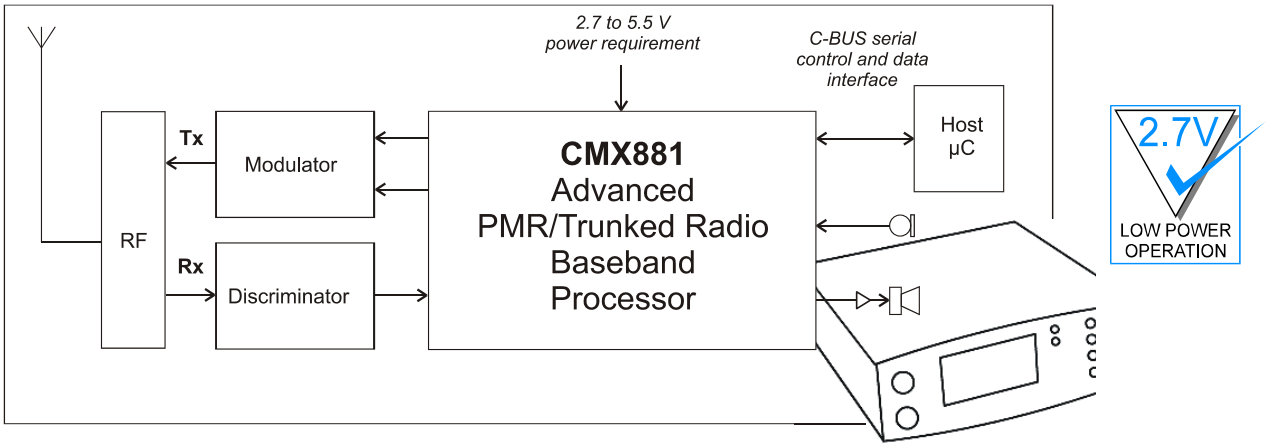


## 1.1 Brief Description

CMX881, a full-function half-duplex audio and signalling processor IC for both PMR and Trunked radio systems suitable for complex and simple end-designs. Under the control of the host µC, all voiceband requirements are catered for: voiceband and sub-audio filtering, pre/de-emphasis and audio routing and global level setting with single or two-point modulation in the transmit path.

The combination of CTCSS and DCS functions and Selcall operation of this product offer, under software control, increased functionality, versatility and privacy.

To cater for call setup and system signalling the CMX881 provides an embedded 1200/2400 bps MSK/FFSK free-format modem for text messaging/paging, passing GPS location data with checksum generation and reception and sync detection in the Rx path.

© 2009 CML Microsystems Plc

With ultra low power requirements and graduated powersave, this product requires a smaller, lower-power µC than existing PMR or trunked radio solutions. It is available in compact SSOP and TSSOP packages.

# CMX881 Functions and Facilities

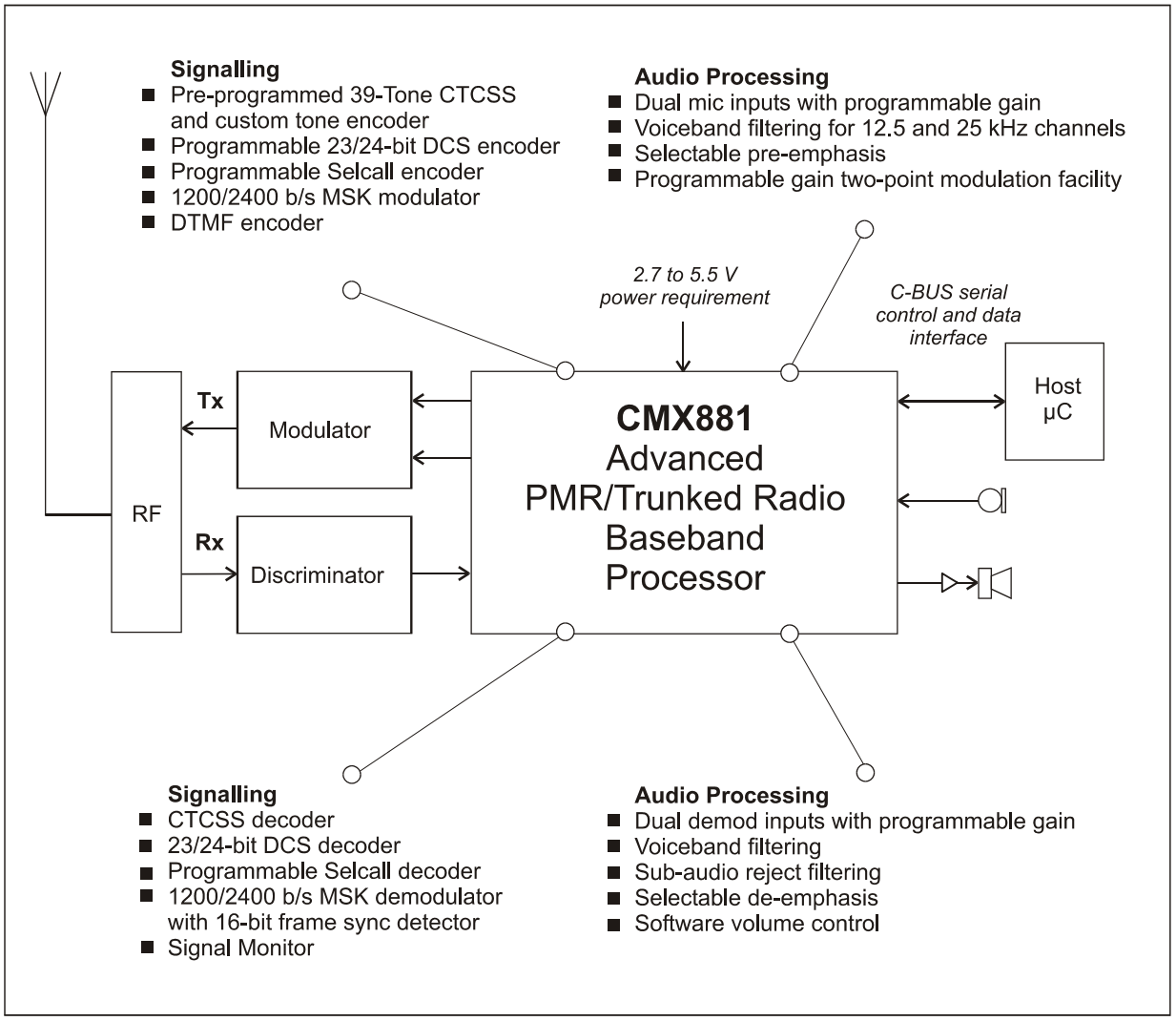


## Half Duplex Operation

Working in a half duplex mode, when the product is in Tx the Rx sections can be powered down to extend battery life, conversely in Rx major sections of the Tx can be treated in the same manner.

## Serial Control and Data Interface

C-BUS: Serial control, data and command program interface compatible with SCI, SPI and Microwire type interfaces.

## Power Requirements and Economy

With an ultra low power requirement, the CMX881 operates from a single 2.7 to 5.5 Volt supply with graduated ‘Sleep Mode’ powersaving facilities for both Rx and Tx modes.

## Signalling:

## CTCSS

Zero ‘Talkdown’ performance eliminates unwanted breaks in communication. The CMX881 is pre-programmed with 39 standard CTCSS (+ Notone and DCS ‘turn off’ tone) frequencies, any one of which can be selected for reception or transmission. Decoding is aided by the use of adjustable decode

bandwidths and threshold levels. Decoding is carried out rapidly thus avoiding the loss of the beginning of speech or data signals.

## DCS

The DCS code is in NRZ format and is transmitted at 134.4b/s in either 23 or 24 bit patterns. The code, for transmission or reception is programmed via the host µC with the 'turn off' tone being supplied from the CTCSS facility. Decoding is carried out rapidly thus avoiding the loss of the beginning of speech or data signals.

## Selcall

This product implements a fully programmable Selcall encoder and decoder employing normal and special tones. Tone frequencies, decoder bandwidths and thresholds are programmed by the host µC. In receive the CMX881 scans its internal tone table for a match, reporting its results to the µC.

## FFSK/MSK Data

An MPT packet and free-format half duplex FFSK/MSK modem is implemented. In receive this device can decode data at either automatic or manually selected 1200b/s or 2400b/s rates. Additionally, in receive, a 16-bit programmed frame sync (MPT packet-type) pattern can be detected. Formatting control and data transfers to and from the modem is under the control of the host µC.

## DTMF Tx

The CMX881, under µC control, can generate and transmit all standard DTMF tone-pairs.

## Signal Monitor

An auxiliary circuit intended for the monitoring of any signal or level; both internal and external. This function can be used in conjunction with the host µC to allow such activities as: VOX operation and/or the 'wake-up' of powered-down circuitry.

## Audio Processing:

## Adjustable Gain Input Amplifiers

Selectable, component adjustable inputs are available for microphone or line voiceband or discriminator inputs. In either mode (Tx or Rx) the selected input can be further level adjusted under the control of the host µC prior to signal- or audio- processing.

## Voiceband and Sub-Audio Filtering with Limiting

Both Rx and Tx paths present voiceband filtering; the Tx path filter can be configured to either 12.5 or 25 kHz channel spacing whilst the Rx path also includes a sub-audio passband filter.

## Voiceband Pre-emphasis and De-emphasis

Voiceband pre-emphasis is selectable to either 12.5 or 25 kHz channel configurations in the Tx path; de-emphasis at -6dB/ octave is selectable in the Rx path.

## Software Adjustable Gains, Volume, Mixing and Routing

Providing total flexibility of operation, this product, under µC control has the ability to select and route functions and audio and signal paths, set bandwidths and threshold levels, mix audio and sub bands and vary both input and out gain/attenuation levels. Output levels from all analogue ports can be 'ramped' up and down at independently programmed rates.

## Attenuation-Adjustable Single/Two-Point Modulation Outputs

To facilitate a wide range of transmitter types, the CMX881 has the ability to provide, independently programmable, modulation outputs; for single or two-point modulation schemes.

# CONTENTS

Section Page

1.0 Features ..... 1
1.1 Brief Description ..... 1
1.2 Block Diagram ..... 7
1.3 Signal List ..... 8
1.4 External Components ..... 10
1.4.1 PCB Layout Guidelines and Power Supply Decoupling ..... 11
1.4.2 Modulator Outputs ..... 12
1.5 General Description ..... 13
1.5.1 Sleep Mode and Auto Start Up ..... 14
1.5.2 Auxiliary ADC ..... 14
1.5.3 Receive Mode ..... 15
1.5.4 Transmit Mode ..... 22
1.5.5 FFSK/MSK Data packeting ..... 26
1.5.6 C-BUS Operation ..... 28
1.6 C-BUS Register Description ..... 29
1.7 Application Notes ..... 52
1.7.1 CRC and Parity information ..... 52
1.8 Performance Specification ..... 53
1.8.1 Electrical Performance ..... 53
1.8.2 Packaging ..... 63

Table Page

Table 1 Concurrent Rx Signalling Modes Supported by the CMX881 ..... 15
Table 2 CTCSS Tones ..... 18
Table 3 DCS Modulation Modes ..... 18
Table 4 DCS 23 Bit Codes ..... 19
Table 5 Selcall Tones ..... 20
Table 6 Concurrent Tx Modes Supported by the CMX881 ..... 22
Table 7 Data Frequencies for each Baud Rate ..... 25
Table 8 DTMF Tone Pairs and Corresponding Tx Programming Codes ..... 26
Table 9 Maximum Data Transfer Latency ..... 27

Figure Page

Figure 1 Block Diagram ..... 7
Figure 2 Recommended External Components ..... 10
Figure 3 Power Supply Connections and De-coupling ..... 11
Figure 4 Modulator output components to achieve -100dB/decade roll-off ..... 12
Figure 5 Rx Audio Filter Frequency Response ..... 16
Figure 6 De-emphasis Curve for TIA/EIA-603 Compliance ..... 16
Figure 7 Low Pass Sub-Audio Band Filter for CTCSS and DCS ..... 17
Figure 8 25kHz Channel Audio Filter Response Template ..... 23
Figure 9 12.5kHz Channel Audio Filter Response Template ..... 23
Figure 10 Audio Frequency Pre-emphasis Template ..... 24
Figure 11 Modulating Waveforms for 1200 and 2400 Baud FFSK/MSK Signals ..... 25
Figure 12 C-BUS Transactions ..... 28

Figure 13 Possible PMR Configuration ..... 52
Figure 14 C-BUS Timing ..... 61
Figure 15 Typical FFSK/MSK Bit Error Rate Graph ..... 62
Figure 16 Mechanical Outline of 28-pin SSOP (D6): *Order as part no. CMX881D6* ..... 63
Figure 17 Mechanical Outline of 28-pin TSSOP (E1): *Order as part no. CMX881E1* ..... 63

It is always recommended that you check for the latest product datasheet version from the Datasheets page of the CML website: [www.cmlmicro.com].

## 1.2 Block Diagram

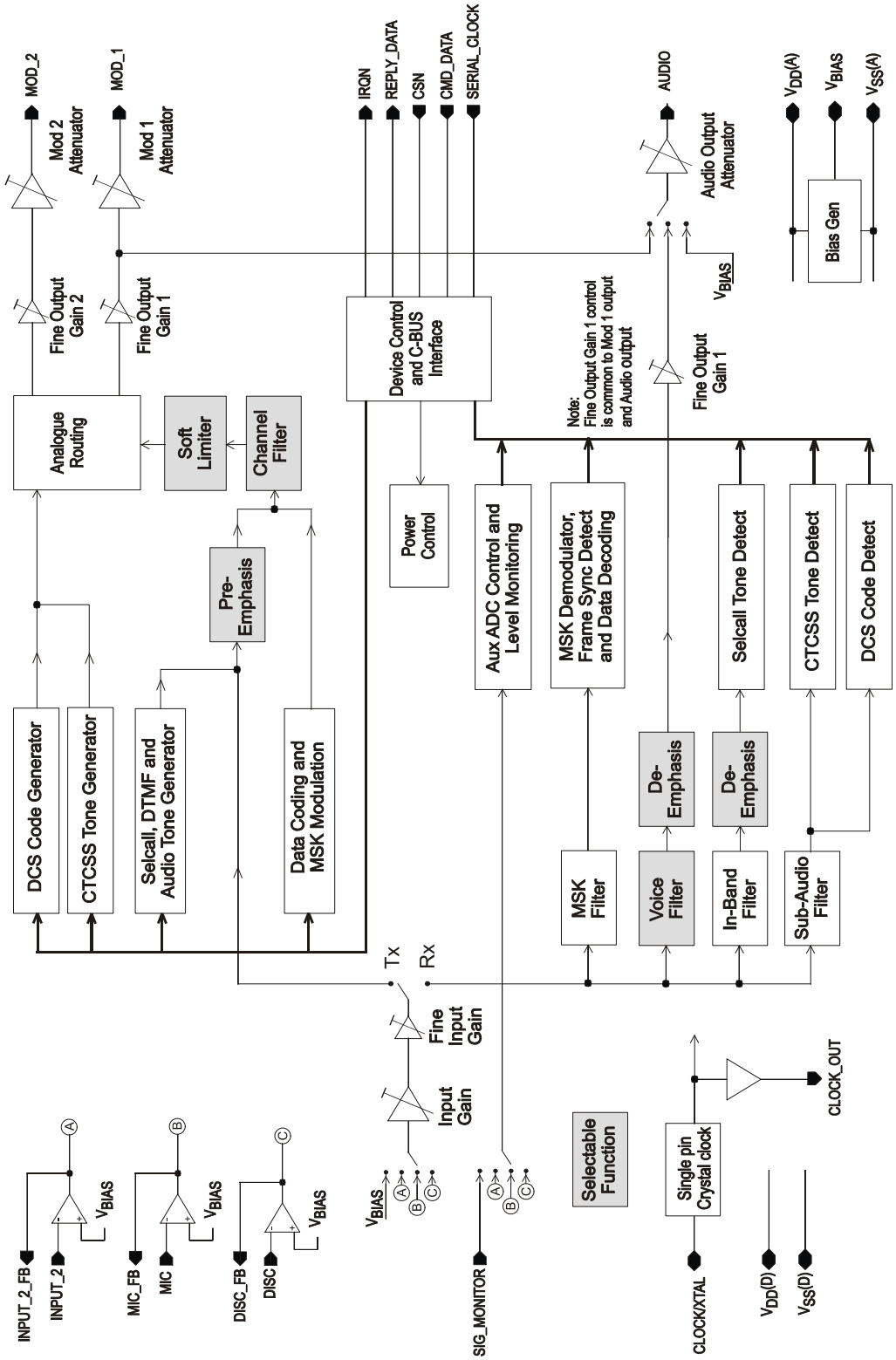


**Figure 1 Block Diagram**

## 1.3 Signal List

| Package D6, E1 | Signal | | Description |
|---|---|---|---|
| **Pin No.** | **Name** | **Type** | |
| 23 | $V_{DD(D)}$ | Power | The digital positive supply rail. This pin should be decoupled to $V_{SS(D)}$ by a capacitor mounted close to the device pins. |
| 5 | $V_{SS(D)}$ | Power | The negative supply rail (digital ground). |
| 18 | $V_{DD(A)}$ | Power | The analogue positive supply rail. Levels and thresholds within the device are proportional to this voltage. This pin should be decoupled to $V_{SS(A)}$ by a capacitor mounted close to the device pins. |
| 9, 21 | $V_{SS(A)}$ | Power | The negative supply rail. Both pins must be connected to analogue ground. |
| 1, 2 | | NC | No connection should be made to these pins. |
| 3 | IRQN | O/P | A 'wire-Orable' output for connection to the Interrupt Request input of the host. This output is pulled down to $V_{SS(D)}$ when active and is high impedance when inactive. An external pull-up resistor is required. |
| 4 | REPLY_DATA | T/S | The C-BUS serial data output to the host. This output is held at high impedance when not sending data to the host. |
| 6 | SERIAL_CLOCK | I/P | The C-BUS serial clock input from the host. |
| 7 | CMD_DATA | I/P | The C-BUS serial data input from the host. |
| 8 | CSN | I/P | The C-BUS data loading control function. Data transfer sequences are initiated, and completed by the CSN signal. |

## 1.3 Signal List (continued)

| Package D6, E1 | Signal | | Description |
|---|---|---|---|
| **Pin No.** | **Name** | **Type** | |
| 10 | $V_{BIAS}$ | O/P | Internally generated bias voltage of approximately $V_{DD(A)}/2$, except when bias is power-saved when $V_{BIAS}$ will discharge to $V_{SS(A)}$. This pin should be decoupled to $V_{SS(A)}$ by a capacitor mounted close to the device pins. |
| 11 | DISC | I/P | Input terminal of discriminator input amplifier. |
| 12 | DISC_FB | O/P | Output / feedback terminal of discriminator input amplifier. |
| 13 | INPUT_2 | I/P | Input terminal of amplifier 2, for either a second microphone or discriminator input. |
| 14 | INPUT_2_FB | O/P | Output / feedback terminal of input amplifier 2. |
| 15 | MIC | I/P | Input terminal of microphone input amplifier. |
| 16 | MIC_FB | O/P | Output / feedback terminal of microphone input amplifier. |
| 17 | SIG_MONITOR | I/P | Signal Monitor input to the internal level detecting circuit. |
| 19 | MOD_1 | O/P | Modulator 1 output. |
| 20 | MOD_2 | O/P | Modulator 2 output. |
| 22 | AUDIO | O/P | Output of the audio section. |
| 24 | CLOCK/XTAL | I/P | The input to the on-chip oscillator for an external crystal or a clock circuit. |
| 25 | CLOCK_OUT | O/P | Buffered (un-inverted) clock output available for use by other devices in the system. |
| 26 | | I/P | Test input, connect to $V_{SS(D)}$. |
| 27, 28 | | NC | No connection should be made to these pins. |

**Notes:**
I/P = Input
O/P = Output
T/S = 3-state Output
NC = No Connection

## 1.4 External Components

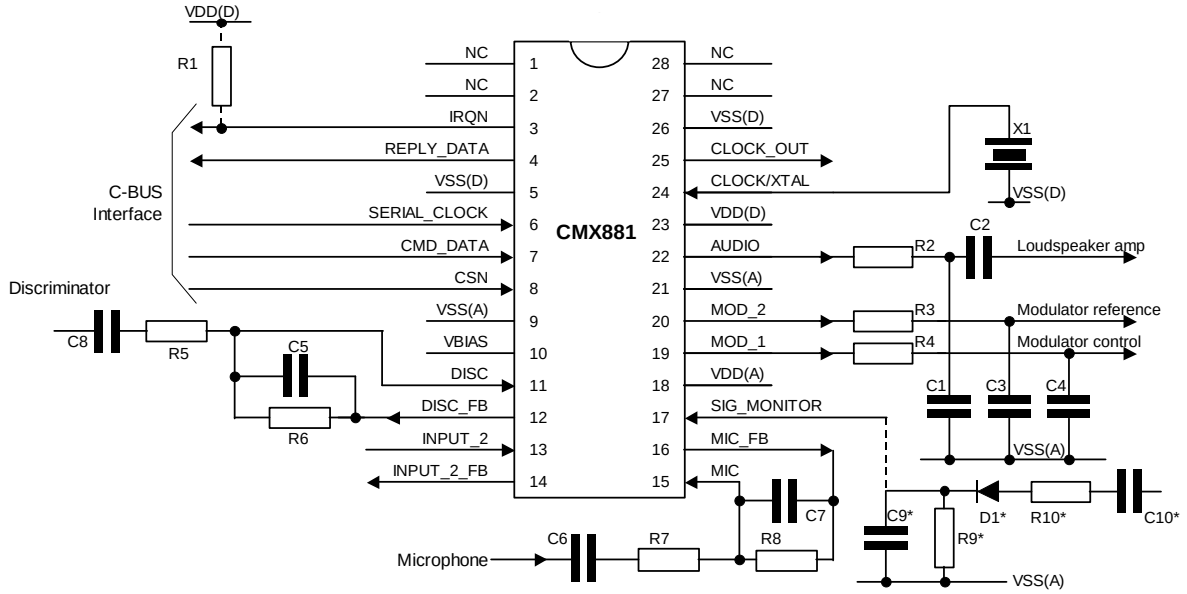


**Figure 2 Recommended External Components**

| | | | | | | |
|---|---|---|---|---|---|---|
| R1 | 100kΩ | R9 | See note 6 | C6 | See note 4 | |
| R2 | 100kΩ | R10 | See note 6 | C7 | 200pF | |
| R3 | 100kΩ | | | C8 | See note 4 | |
| R4 | 100kΩ | C1 | 100pF | C9/10 | See note 6 | |
| R5 | See note 2 | C2 | 1nF | | | |
| R6 | 100kΩ | C3 | 100pF | X1 | 18.432MHz | See note 1 |
| R7 | See note 3 | C4 | 100pF | | | |
| R8 | 100kΩ | C5 | 100pF | D1 | See note 6 | |

Resistors ±5%, capacitors and inductors ±20% unless otherwise stated.

Notes:

1. X1 can be a crystal or an external clock generator; this will depend on the application. The clock drift requirement is defined in section 1.8.1. The tracks between the crystal and pin 24 and pin 5 should be as short as possible to achieve maximum stability and best start up performance.

2. R5 should be selected to provide the desired dc gain (assuming C8 is not present) of the discriminator input, as follows:

$$|GAIN_{Disc}| = 100k\Omega / R5$$

The gain should be such that the resultant output at the DISC_FB pin is within the discriminator input signal range specified in section 1.8.1.

3. R7 should be selected to provide the desired dc gain (assuming C6 is not present) of the microphone input, as follows:

$$|GAIN_{Mic}| = 100k\Omega / R7$$

The gain should be such that the resultant output at the MIC_FB pin is within the microphone input signal range specified in section 1.8.1. For optimum performance with low signal microphones, an additional external gain stage may be required.

4. C6 and C8 should be selected to maintain the lower frequency roll-off of the microphone and discriminator inputs as follows:

$$C6 \geq 30nF \times |GAIN_{Mic}|$$
$$C8 \geq 1\mu F \times |GAIN_{Disc}|$$

5. INPUT_2 and INPUT_2_FB connections allow the user to have a second discriminator or microphone input. Component connections and values are as for the networks around pins 11 and 12 or pins 15 and 16 respectively. If this input is not required pin 13 must be connected to pin 14.

6. The circuit formed by D1, C9, C10, R9 and R10 is a peak detector, this is only required when the signal monitor is connected to an ac signal (e.g. microphone or received signal). For a dc type signal (e.g. RSSI) these components are not required. The values of C9 and R10 set the attack time, C9 and R9 set the decay time. D1 can be any suitable small signal diode. R10 should be a high enough value so as not to distort the signal source.

### 1.4.1 PCB Layout Guidelines and Power Supply Decoupling

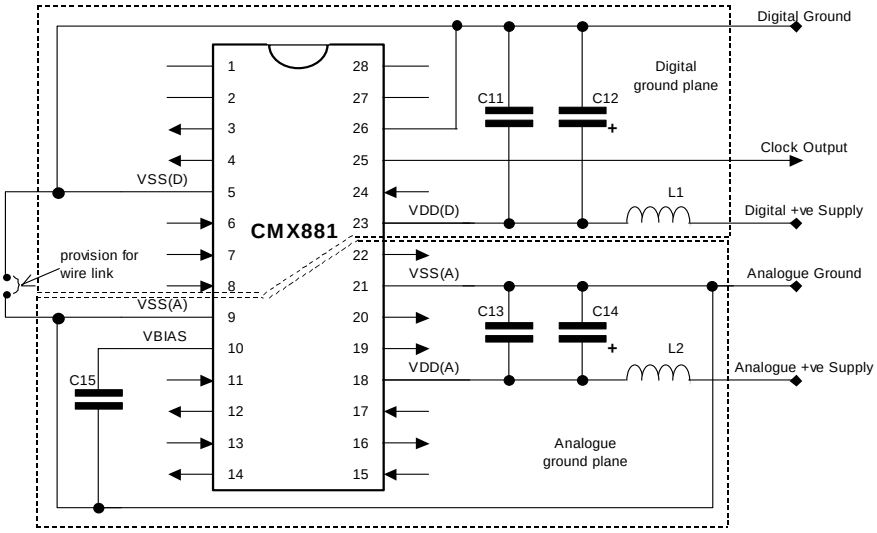


**Figure 3 Power Supply Connections and De-coupling**

| | | | | | | |
|---|---|---|---|---|---|---|
| C11 | 10nF | C14 | 10µF | L1 | 100nH | See note 7 |
| C12 | 10µF | C15 | 100nF | L2 | 100nH | See note 7 |
| C13 | 10nF | | | | | |

Resistors ±5%, capacitors and inductors ±20% unless otherwise stated.

Notes:

7. The inductors L1 and L2 can be omitted but this may degrade system performance.

It is important to protect the analogue pins from extraneous inband noise and to minimise the impedance between the CMX881 and the supply and bias de-coupling capacitors. The de-coupling capacitors C11, C12, C13 and C14 should be as close as possible to the CMX881, particularly C11 and C13. It is therefore recommended that the printed circuit board is laid out with separate ground planes for the $V_{SS}$(A) and $V_{SS}$(D) in the area of the CMX881, with provision to make a link between them close to the CMX881.

$V_{BIAS}$ is used as an internal reference for detecting and generating the various analogue signals. It must be carefully decoupled, to ensure its integrity, so apart from the decoupling capacitor shown, no other loads should be connected. If $V_{BIAS}$ needs to be used to set the discriminator mid-point reference, it must be buffered with a high input impedance buffer.

The single ended microphone input(s) and audio output must be ac coupled as shown, so their return paths can be connected to $V_{SS}$(A) without introducing dc offsets. Further buffering of the audio output is advised.

The crystal X1 can be replaced with an external clock source if required/desired. The internal clock generating circuit can be placed in power-save mode if the clock is provided externally.

### 1.4.2 Modulator Outputs

The combination of CMX881 and the modulator output components, R3/C3 and R4/C4, achieve roll-off rates better than –60dB/decade. If required this can be increased to better than –100dB/decade by replacing R3/C3 and R4/C4 with the active filter circuit shown in Figure 4.

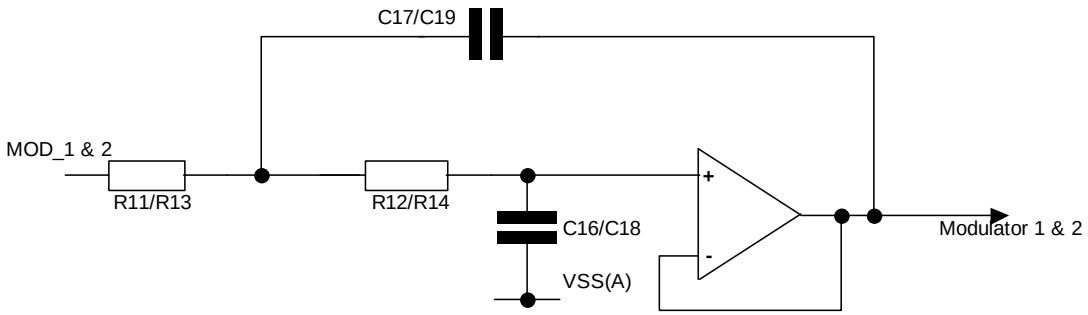


**Figure 4 Modulator output components to achieve -100dB/decade roll-off**

| | | | | |
|---|---|---|---|---|
| R11 | 120kΩ | C16 | 220pF | |
| R12 | 120kΩ | C17 | 440pF | (2 x C16) |
| R13 | 120kΩ | C18 | 220pF | |
| R14 | 120kΩ | C19 | 440pF | (2 x C18) |

Resistors ±5%, capacitors and inductors ±20% unless otherwise stated.

Notes:

8. The external op-amp must be chosen to ensure that the required signal output level can be driven within acceptable distortion limits.

## 1.5 General Description

The CMX881 is intended for use in half duplex analogue two way land mobile radio (LMR) equipment and is particularly suited to multi standard PMR systems. The CMX881 provides radio signal encoder and decoder functions for: Voice, Selcall, Tx DTMF, CTCSS, DCS and FFSK/MSK data permitting simple to sophisticated levels of tone control and data transfer. Power control facilities allow the device to be placed in varying levels of sleep allowing the user to fine tune the power depending on system requirements. The CMX881 includes a crystal clock generator, with buffered output, to provide a common system clock if required. A block diagram of the CMX881 is shown in Figure 1.

**Tx functions**

**Audio**

- Single/dual microphone inputs with input amplifier and programmable gain adjustment
- Filtering selectable for 12.5kHz and 25kHz channels
- Selectable pre-emphasis
- 2-point modulation outputs with programmable level adjustment

**Signalling**

- Pre-programmed 39 tone CTCSS encoder
- Programmable 23/24bit DCS encoder
- Programmable audio tone generator (for custom audio tones)
- Programmable Selcall encoder
- DTMF encoder
- 1200/2400bps MSK modulator

**Rx functions**

**Audio**

- Single/dual demodulator inputs with input amplifier and programmable gain adjustment
- Voice-band and sub-audio rejection filtering
- Selectable de-emphasis
- Software volume control

**Signalling**

- 1 from 39 CTCSS decoder + Tone Clone mode
- 23/24bit DCS decoder
- Programmable Selcall decoder
- 1200/2400bps MSK demodulator and 16-bit frame sync detector
- Signal Monitor (RSSI / Microphone / Rx channel level monitor)

**Host Interface**

A serial data interface (C-BUS) is used for command, status and data transfers between the CMX881 and the host μC; this interface is compatible with microwire, SPI etc. Interrupt signals notify the host μC when a change in status has occurred and the μC should read the status register across the C-BUS and respond accordingly. Interrupts only occur if the appropriate mask bit has been set. See section 1.6.15.

**Auxiliary (Signal Monitor) analogue signal**

The CMX881 includes a Signal level monitor. This is an 8-bit successive approximation ADC and a two level signal sensor. The two level sensor facility can be used in conjunction with the power saving mode to wake up powered down blocks, and issue an interrupt on the IRQN line when the Signal exceeds the preset threshold level. The auxiliary ADC voltage reference is taken directly from the $V_{DD}$(A) supply, so the Signal level being monitored should be derived from this supply voltage.

### 1.5.1 Sleep Mode and Auto Start Up

A power-on reset signal remains asserted for approximately 256 x xtal clock cycles after power is applied and the clock or xtal oscillator is established. It performs the same function as the C-BUS General Reset command ($01), further details of which are given in section 1.6.2. A temporary loss of power may cause the power-on reset signal to be re-asserted. If this happens, both the C-BUS registers and the Programming register block should be reprogrammed, once power has been restored and a C-BUS General Reset command has been issued. This is to prevent any possibility of data corruption within the device.

Power-on reset or C-BUS general reset places the CMX881 into sleep mode, which results in all internal blocks, except the xtal clock circuit, being placed in power-saved mode. The xtal clock circuit can be power-saved but this must be done by an explicit C-BUS command. Power saving is achieved by turning off bias current sources or disabling local clocks, as appropriate.

During system standby periods, parts of the device can be put into sleep mode by the host to conserve power. The Auxiliary ADC can be programmed so that when the level exceeds a threshold, an interrupt is issued over the C-BUS and the selected mode (Tx or Rx) “woken up” within 400µs. If this time is too long to ensure no part of the signal is lost, the DISC or MIC input and ADC path can be kept powered up whilst in standby mode. The receive modes and transmit modes can also be activated by commands from the C-BUS. On wake up, activation of the various signal path stages are phased appropriately to avoid causing unwanted transients. More details are provided in section 1.6.4 on Signal Routing.

The CMX881 can be programmed to wake up its receive path automatically (automatic start-up) when the DISC input level exceeds the ‘high’ level threshold. While the CMX881 is in automatic receive start-up mode the DISC input must also be selected for the signal path. When not in automatic start-up mode it is recommended that the required input is selected during Auxiliary ADC operation to avoid subsequent switching of the input signal source.

### 1.5.2 Auxiliary ADC

This section of the CMX881 operates in both Tx and Rx modes and can be used to monitor one of 4 signal sources: Sig_Monitor pin, MIC1, Input_2 or DISC inputs. Activity on the selected input will optionally issue an interrupt if host intervention is required. During idle periods the majority of the CMX881 can be placed into low power mode. If monitoring ac signals connected to the Sig_Monitor pin they must be rectified and filtered using passive external circuitry.

The Auxiliary ADC facility comprises an 8-bit ADC, a comparator, an 8-bit result data word and two 8-bit threshold registers, one defining the ‘Signal high’ level and the other the ‘Signal low’ level. The two threshold registers are combined into one 16-bit C-BUS register word. The ADC measures the Signal level at intervals that are set by C-BUS command.

It is advised that the interval be set to <125µs while waiting for a new incoming signal so that the CMX881 and host µC can be powered up and put into the correct mode in time to avoid missing any part of the signal. The default interval period following a reset is 20.8µs. Power dissipation of the Auxiliary ADC can be reduced by increasing the conversion interval time.

The result of the most recent Auxiliary ADC measurement can be read over the C-BUS whenever the Signal Processing and Aux ADC circuits are powered up.

The Auxiliary ADC compares each conversion result with the values in the ‘Signal high’ or the ‘Signal low’ threshold registers. The CMX881 can, for example, issue an interrupt to the host µC to wake up the receive path when the Auxiliary ADC input exceeds the ‘high’ level threshold. The CMX881 can also issue an interrupt to the host µC to indicate a weak or absent signal when it falls below the ‘low’ level threshold. This provides a user programmable hysteresis facility. The host must ensure that the value in the ‘low’ register is always less than that of the ‘high’ register. The options for issuing interrupts and for automatic start-up are selected by C-BUS command.

The Auxiliary ADC options are controlled by the $B2, $B3 and $C0 C-BUS registers. The auxiliary ADC data can be read from the $B4 C-BUS register.

The Auxiliary ADC requires the Auxiliary ADC, BIAS and Xtal clock to all be enabled in the Power Down Control register.

### 1.5.3 Receive Mode

The CMX881 can receive voice and various signal formats: CTCSS tone, DCS code, Selcall and FFSK/ MSK data at 1200 and 2400bps. Reception of each of these signal types can be independently enabled/disabled by C-BUS command. If enabled, an interrupt will be issued to notify the host μC of the presence and type of the incoming signal.

In receive mode the CMX881 performs signal type identification in 2 frequency bands, sub-audio (60 - 260Hz) and voice band (300 - 3kHz), to determine what type of signal is being received. When an enabled signal is detected this will be indicated to the host over the C-BUS and the CMX881 will continue to process the received signal in its band. Identification / process mode will continue in the other band. The CMX881 can process voice and simultaneously identify and process at least 2 other signal types. See Table 1 for valid combinations.

The receive gain and audio output amplifier gain can be adjusted by the host μC, via C-BUS command, to provide receive signal level adjustment and output volume control or muting.

**Table 1 Concurrent Rx Signalling Modes Supported by the CMX881**

| | Sub-Audio<br>*All combinations of:* | Voice band signalling<br>*Any one of A - C:* |
|---|---|---|
| With Rx Voice Processing[1] or Audio Tone generation | DCS<br>Inverted DCS<br>CTCSS | A: None<br>B: Selcall<br>C: 1200bps FFSK/MSK |

| | Sub-Audio<br>*All combinations of:* | Voice band signalling<br>*Any one of A - G:* |
|---|---|---|
| No Voice Processing or Audio Tone generation | DCS<br>Inverted DCS<br>CTCSS | A: None<br>B: Selcall<br>C: 1200bps FFSK/MSK<br>D: 2400bps FFSK/MSK<br>E: 1200 & 2400 bps FFSK/MSK<br>F: Selcall & 1200bps FFSK/MSK<br>G: Selcall & 2400bps FFSK/MSK |

| | Sub-Audio<br>*All combinations of:* | Voice band signalling<br>*Any one of A - H:* |
|---|---|---|
| No Voice Processing or Audio Tone generation | No Subaudio processing | A: None<br>B: Selcall<br>C: 1200bps FFSK/MSK<br>D: 2400bps FFSK/MSK<br>E: 1200 & 2400 bps FFSK/MSK<br>F: Selcall & 1200bps FFSK/MSK<br>G: Selcall & 2400bps FFSK/MSK<br>H: Selcall & 1200bps & 2400bps FFSK/MSK |

1 Including optional de-emphasis

By disabling all the decoding modes, the device can be configured to receive voice only signals with no decoding of the voice band, CTCSS or DCS signalling. This will result in reception of all signals as if they are voice. In this case it is up to the user/host μC to respond appropriately to incoming signals.

The CMX881 operates in half duplex, so whilst in receive mode the transmit path (microphone input and modulator output amplifiers) can be disabled and powered down if required. The AUDIO output signal level is equalised (to $V_{BIAS}$) before switching between the audio port and the modulator ports, to minimise unwanted audible transients. The Off/Power-save level of the modulator outputs is the same as the $V_{BIAS}$ pin, so the audio output level must also be at this level before switching.

#### 1.5.3.1 Receiving Voice Band Signals

When a voice based signal is being received, it is up to the µC, in response to signal status information provided by the CMX881, to control muting/enabling of the voice band signal to the AUDIO output.

The discriminator path through the device has a programmable gain stage. Whilst in receive mode this should normally be set to 0dB (the default) gain.

**Receive Filtering**

The incoming signal is filtered, as shown in Figure 5, to remove sub-audio components and to minimise high frequency noise. When appropriate the voice signal can then be routed to the AUDIO output.

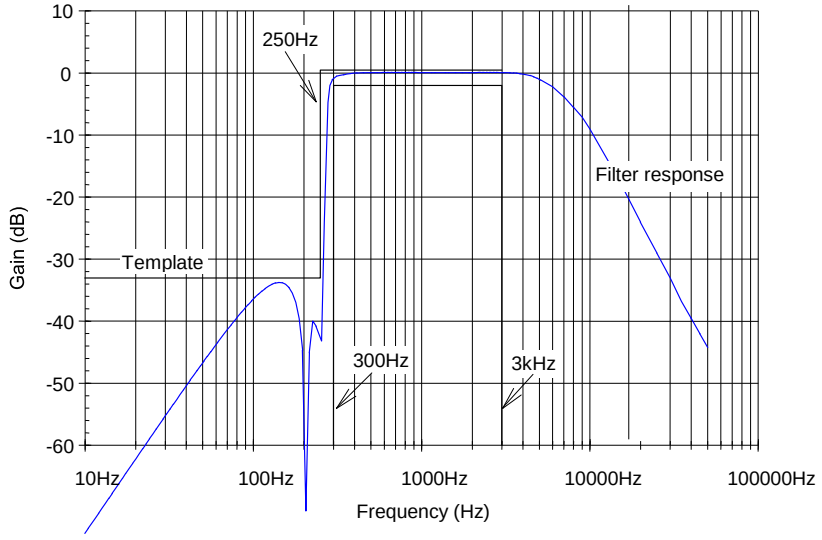


**Figure 5 Rx Audio Filter Frequency Response**

**De-emphasis**

Optional de-emphasis at -6dB per octave from 300Hz to 3000Hz (shown in Figure 6) can be selected to facilitate compliance with TIA/EIA-603.

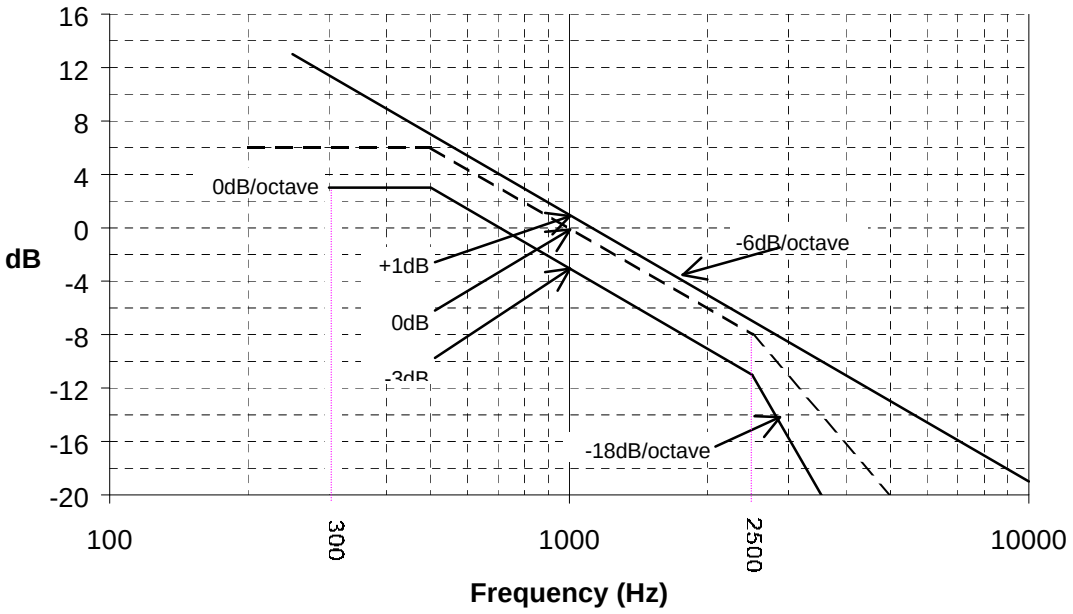


**Figure 6 De-emphasis Curve for TIA/EIA-603 Compliance**

#### 1.5.3.2 Receiving and Decoding CTCSS Tones

The CMX881 is able to accurately detect valid CTCSS tones quickly to avoid losing the beginning of voice or possibly data transmissions, and is able to continuously monitor the detected tone with minimal probability of falsely dropping out. The received signal is filtered in accordance with the template shown in Figure 7, to prevent signals outside the sub-audio range from interfering with the sub-audio tone detection.

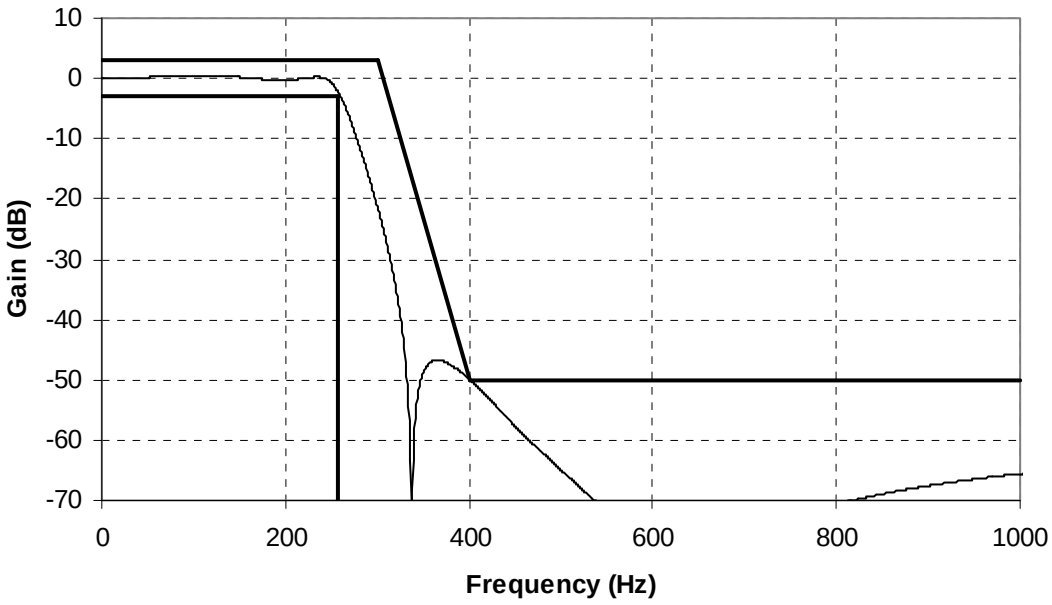


**Figure 7 Low Pass Sub-Audio Band Filter for CTCSS and DCS**

Once a valid CTCSS tone has been detected, the voice band signal can be passed to the audio output. The voice band signal is extracted from the received signal by band pass filtering as shown in Figure 5.

To help decode received CTCSS tones adjustable decoder bandwidths and threshold levels permit decode certainty and signal to noise performance to be traded when congestion or range limits the system performance. This entails setting the tone decoder bandwidth and threshold level in P2.1 of the Programming register ($C8) and programming the Audio & CTCSS Control register with the desired tone.

**Tone Cloning™:**

Tone Cloning™ facilitates the detection of CTCSS tones 1 to 39 in receive mode. This allows the device to non-predictively detect any tone in this range. The received tone number will be reported in the Tones Status register. This tone code can then be programmed into the 'Audio and Device Address Control' register, by the host µC. The cloned tone will only be active when CTCSS is enabled in the Mode register.

It is recommended that the CTCSS bandwidth selected in Programming Register word P2.1 is set to be sufficiently low to ensure no overlapping of adjacent tones.

™ Tone Cloning is a trademark of CML Microsystems Plc.

**CTCSS Tones**

Table 2 lists the CTCSS tones available. The tone numbers are decimal equivalents of the numbers written to the Audio & CTCSS Control register ($C2) and reported in the Tone Status register ($CC).

**Table 2 CTCSS Tones**

| Tone Number | Freq. (Hz) | Tone Number | Freq. (Hz) | Tone Number | Freq. (Hz) |
|---|---|---|---|---|---|
| 00[1] | No Tone | 20 | 131.8 | *40-54* | *Reserved* |
| 01 | 67.0 | 21 | 136.5 | *55*[2] | *Invalid tone* |
| 02 | 71.9 | 22 | 141.3 | | |
| 03 | 74.4 | 23 | 146.2 | *>=56* | *Reserved* |
| 04 | 77.0 | 24 | 151.4 | | |
| 05 | 79.7 | 25 | 156.7 | | |
| 06 | 82.5 | 26 | 162.2 | | |
| 07 | 85.4 | 27 | 167.9 | | |
| 08 | 88.5 | 28 | 173.8 | | |
| 09 | 91.5 | 29 | 179.9 | | |
| 10 | 94.8 | 30 | 186.2 | | |
| 11 | 97.4 | 31 | 192.8 | | |
| 12 | 100.0 | 32 | 203.5 | | |
| 13 | 103.5 | 33 | 210.7 | | |
| 14 | 107.2 | 34 | 218.1 | | |
| 15 | 110.9 | 35 | 225.7 | | |
| 16 | 114.8 | 36 | 233.6 | | |
| 17 | 118.8 | 37 | 241.8 | | |
| 18 | 123.0 | 38 | 250.3 | | |
| 19 | 127.3 | 39 | 69.3 | | |

Notes:

1 Tone number 00 in the Tone Status register ($CC) indicates that none of the above subaudio tones is being detected - see also section 1.6.19. If tone number 00 is programmed into the Audio & CTCSS Control register ($C2) no tone will be scanned for. If CTCSS transmit is selected this tone setting will cause the CTCSS generator to output no signal.

2 Tone number 55 is reported in the Tone Status register ($CC), when CTCSS receive is enabled and a subaudio tone is detected that does not correspond to the selected tone. This could be a tone in the subaudio band which is not in the table or a tone in the table which is not the selected tone.

#### 1.5.3.3 Receiving and Decoding DCS Codes

DCS Code is in NRZ format and transmitted at 134.4 ±0.4bps. The CMX881 is able to decode any 23 or 24 bit pattern in either of the two DCS modulation modes defined by TIA/EIA-603 and described in Table 3. The CMX881 can detect a valid DCS Code quickly enough to avoid losing the beginning of voice transmissions.

**Table 3 DCS Modulation Modes**

| Modulation Type: | Data Bit: | FM Frequency Change: |
|---|---|---|
| A | 0<br>1 | Minus frequency shift<br>Plus frequency shift |
| B | 0<br>1 | Plus frequency shift<br>Minus frequency shift |

The CMX881 detects the DCS code that matches the programmed code defined in the 'DCS Code' words (P2.2-3) in the Programming register ($C8).

To detect the pre-programmed DCS code the signal is low pass filtered to suppress all but the sub-audio band using the filter shown in Figure 7. Further equalisation filtering, signal slicing and level detection are done to extract the code being received. The extracted code is then matched with the programmed 23 or 24-bit DCS code to be recognised, in the order least significant first through to most significant DCS code bit last. Table 4 shows a selection of valid 23-bit DCS codes, this does not preclude other codes being programmed. Recognition of a valid DCS Code will be flagged if the decode is successful (3 or less errors). A failure to decode is indicated by a '0' flag. This flag is updated after the decoding of every 4th bit of the incoming signal.

Once a valid DCS Code has been detected, the voice band signal can be passed to the AUDIO output under the control of the host µC. The voice signal is extracted from the received input signal by band pass filtering; see Figure 5. More details for programming DCS Codes are provided in section 1.6.20.3.

The end of DCS transmissions is indicated by a 134.4 ±0.5Hz tone for 150-200ms. To detect the DCS turn off tone while receiving DCS, the DCS turn off tone option must be selected in the Audio and CTCSS Control ($C2) register. When a DCS turn off tone is detected it will cause a DCS interrupt; the receiver audio output can then be muted by the host.

**Table 4 DCS 23 Bit Codes**

| DCS Code | DCS bits 22-12 | DCS bits 11-0 | DCS Code | DCS bits 22-12 | DCS bits 11-0 | DCS Code | DCS bits 22-12 | DCS bits 11-0 |
|---|---|---|---|---|---|---|---|---|
| 023 | 763 | 813 | 174 | 18B | 87C | 445 | 7B8 | 925 |
| 025 | 6B7 | 815 | 205 | 6E9 | 885 | 464 | 27E | 934 |
| 026 | 65D | 816 | 223 | 68E | 893 | 465 | 60B | 935 |
| 031 | 51F | 819 | 226 | 7B0 | 896 | 466 | 6E1 | 936 |
| 032 | 5F5 | 81A | 243 | 45B | 8A3 | 503 | 3C6 | 943 |
| 043 | 5B6 | 823 | 244 | 1FA | 8A4 | 506 | 2F8 | 946 |
| 047 | 0FD | 827 | 245 | 58F | 8A5 | 516 | 41B | 94E |
| 051 | 7CA | 829 | 251 | 627 | 8A9 | 532 | 0E3 | 95A |
| 054 | 6F4 | 82C | 261 | 177 | 8B1 | 546 | 19E | 966 |
| 065 | 5D1 | 835 | 263 | 5E8 | 8B3 | 565 | 0C7 | 975 |
| 071 | 679 | 839 | 265 | 43C | 8B5 | 606 | 5D9 | 986 |
| 072 | 693 | 83A | 271 | 794 | 8B9 | 612 | 671 | 98A |
| 073 | 2E6 | 83B | 306 | 0CF | 8C6 | 624 | 0F5 | 994 |
| 074 | 747 | 83C | 311 | 38D | 8C9 | 627 | 01F | 997 |
| 114 | 35E | 84C | 315 | 6C6 | 8CD | 631 | 728 | 999 |
| 115 | 72B | 84D | 331 | 23E | 8D9 | 632 | 7C2 | 99A |
| 116 | 7C1 | 84E | 343 | 297 | 8E3 | 654 | 4C3 | 9AC |
| 125 | 07B | 855 | 346 | 3A9 | 8E6 | 662 | 247 | 9B2 |
| 131 | 3D3 | 859 | 351 | 0EB | 8E9 | 664 | 393 | 9B4 |
| 132 | 339 | 85A | 364 | 685 | 8F4 | 703 | 22B | 9C3 |
| 134 | 2ED | 85C | 365 | 2F0 | 8F5 | 712 | 0BD | 9CA |
| 143 | 37A | 863 | 371 | 158 | 8F9 | 723 | 398 | 9D3 |
| 152 | 1EC | 86A | 411 | 776 | 909 | 731 | 1E4 | 9D9 |
| 155 | 44D | 86D | 412 | 79C | 90A | 732 | 10E | 9DA |
| 156 | 4A7 | 86E | 413 | 3E9 | 90B | 734 | 0DA | 9DC |
| 162 | 6BC | 872 | 423 | 4B9 | 913 | 743 | 14D | 9E3 |
| 165 | 31D | 875 | 431 | 6C5 | 919 | 754 | 20F | 9EC |
| 172 | 05F | 87A | 432 | 62F | 91A | | | |

#### 1.5.3.4 Receiving and Decoding Selcall Tones

Selcall tones can be used to flag the start and end of a call. They may also occur during a call in which case the tone may be audible at the receiver. If enabled, an interrupt will be issued when a signal matching a valid Selcall tone is detected and when a present Selcall tone turns off or changes (i.e. at the

start and at the end of each Selcall tone). The audio path can then be turned on and off at the appropriate times under control of the host µC.

The CMX881 implements a fully programmable Selcall encoder / decoder. The frequency of each tone is defined in the Program registers P1.2-18. See section 1.6.20 for programming details.

In receive the CMX881 scans through the tone table sequentially, the code reported will be the first one that matches the incoming frequency.

Adjustable decoder bandwidths, threshold levels are programmable via the Programming register and permits certainty of detection and signal to noise performance to be traded when congestion or range limits the system performance. The Selcall signal is derived from the received input signal after the band pass filtering shown in Figure 5.

Table 5 lists the Selcall codes available, these are 5 bit numbers set or reported in: Tx Tone register ($C3) and Tone Status register ($CC).

**Table 5 Selcall Tones**

| Special / Information Tones ($5^{th}$ bit = 0) | | | Normal Tones ($5^{th}$ bit = 1) | | |
|---|---|---|---|---|---|
| **4 bit Code** | | **Frequency set in Program register:** | **4 bit Code** | | **Frequency set in Program register:** |
| **Dec** | **Hex** | | **Dec** | **Hex** | |
| 0 | 0 | No Tone | 0 | 0 | P1.3[1] |
| 1 | 1 | 1-13 Reserved | 1 | 1 | P1.4[1] |
| 2 | 2 | | 2 | 2 | P1.5[1] |
| 3 | 3 | | 3 | 3 | P1.6[1] |
| 4 | 4 | | 4 | 4 | P1.7[1] |
| 5 | 5 | | 5 | 5 | P1.8[1] |
| 6 | 6 | | 6 | 6 | P1.9[1] |
| 7 | 7 | | 7 | 7 | P1.10[1] |
| 8 | 8 | | 8 | 8 | P1.11[1] |
| 9 | 9 | | 9 | 9 | P1.12[1] |
| 10 | A | | 10 | A | P1.13[1] |
| 11 | B | | 11 | B | P1.14[1] |
| 12 | C | | 12 | C | P1.15[1] |
| 13 | D | | 13 | D | P1.16[1] |
| 14 | E | P1.2[1,2] | 14 | E | P1.17[1] |
| 15 | F | Unrecognised tone | 15 | F | Unrecognised tone |

Notes:

1 Special tone 14, and Normal tones 0 - 15 provide user programmable tone options for both transmit and receive modes as set in the indicated Program register, for programming information see section 1.6.20.2. To ensure correct operation tones should not be programmed with overlapping detect bandwidths.

2 Special tone 14 is the repeat tone, this code must be used in transmit when the new code to be sent is the same as the previous one. e.g. to send ‘333’ the sequence ‘3R3’ should be sent, where ‘R’ is the repeat tone. When receiving Selcall tones the CMX881 will indicate the repeat tone when it is received, it is up to the host to interpret this and decode tones accordingly.

#### 1.5.3.5 Receiving FFSK Signals

The CMX881 can decode incoming FFSK/MSK signals at either 1200 or 2400 baud data rates. It can achieve this by deriving the baud rate from the received signal. Alternatively a control word may set the baud rate, in which case the device only responds to signals operating at that rate. The form of FFSK/MSK signals for these baud rates, excluding noise, is shown in Figure 11.

The received signal is filtered and data is extracted. A PLL is used to extract the clock from the recovered serial data stream. The recovered data is stored in a 1 byte buffer and an interrupt issued to indicate received data is ready. Data is transferred over the C-BUS, controlled by host instructions. If this data is not read before the next data is decoded it will be overwritten. The MSK bit clock is not output externally. It is up to the user to ensure that the data is transferred at an adequate rate following data ready being flagged, see Table 9.

The extracted data is compared with up to three 16-bit programmed frame sync patterns (SYND, SYNC and it's inverse SYNT). SYNC and SYND are both preset to $C4D7 following a RESET command. An interrupt will be flagged when the programmed frame sync pattern is detected. The host may stop the frame sync search by disabling the MSK demodulator.

FFSK may be transmitted in conjunction with a CTCSS or DCS sub-audio component. The device will handle the sub-audio signals as already described. If a sub-audio signal turns off during reception of FFSK, it is up to the host μC to turn off the FFSK decoding as the device will continue receiving and processing the incoming signal until commanded otherwise by the host μC.

The host must keep track of the message length or otherwise determine the end of reception (e.g. by using sub-audio information or the Auxiliary ADC to check for signal level) and disable the FFSK demodulator at the appropriate time.

### 1.5.4 Transmit Mode

The device operates in half duplex, so when the device is in transmit mode the receive path (discriminator and audio output amplifiers) should be disabled, and can be powered down, by the host μC.

Two modulator outputs with independently programmable gains are provided to facilitate single or two-point modulation, separate sub-audio and voice band outputs. If one of the modulator outputs is not used it can be disabled to conserve power.

To avoid erroneous transmission of out of band frequencies when changing from Rx to Tx the MOD_1 and MOD_2 outputs are ramped to the quiescent modulator output level, $V_{BIAS}$ before switching. Similarly, when starting a transmission, the transmitted signal strength is ramped up from the quiescent $V_{BIAS}$ level and when ending a transmission the transmitted signal strength is ramped down to the quiescent $V_{BIAS}$ level. The ramp rates are set in the Programming register P4.6. When the modulator outputs are disabled, their outputs will be set to $V_{BIAS}$. When the modulator output drivers are powered down, their outputs will be floating (high impedance), so the RF modulator will need to be turned off.

**Table 6 Concurrent Tx Modes Supported by the CMX881**

| Sub-Audio | Voice band |
|---|---|
| CTCSS | |
| CTCSS + | Voice |
| CTCSS + | Selcall |
| CTCSS + | FFSK/MSK |
| CTCSS + | DTMF |
| DCS | |
| DCS + | Voice |
| DCS + | Selcall |
| DCS + | DTMF |
| DCS + | FFSK/MSK |
| | Voice |
| | Selcall |
| | DTMF |
| | FFSK/MSK |

For all transmissions the host must only enable signals after the appropriate data and settings for those signals are loaded into the C-BUS registers. As soon as any signalling is enabled the CMX881 will use the settings to control the way information is transmitted.

A programmable gain stage in the microphone input path facilitates a host controlled VOGAD capability.

#### 1.5.4.1 Processing Voice Signals for Transmission over Analogue Channels

The microphone input(s), with programmable gain, can be selected as the voice input source. Pre-emphasis is selectable with either version of the 2 analogue Tx audio filters (for 12.5kHz and 25kHz channel spacing). These are designed for use in ETS-300-086 and/or TIA/EIA-603 compliant applications. Both filters attenuate sub-audio frequencies below 250Hz by more than 33dB wrt the signal level at 1kHz. These filters together with a built in limiter help ensure compliance with ETS-300-086 (25kHz and 12.5kHz channel spacing) when levels and gain settings are set up correctly in the target system.

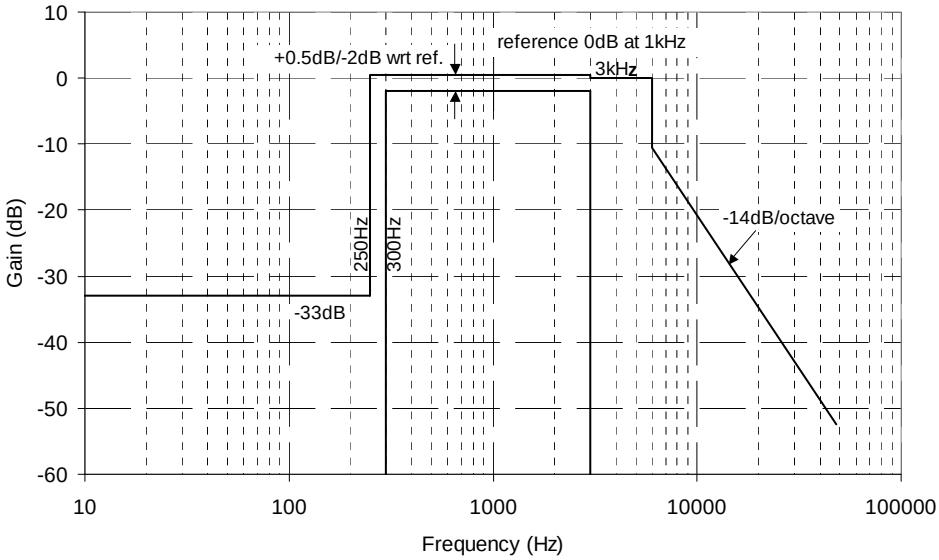


**Figure 8 25kHz Channel Audio Filter Response Template**

The filter characteristics of the 12.5kHz channel filter fits the filter template shown in Figure 9 (solid outline). This filter also facilitates implementation of systems compliant with TIA/EIA-603 'A' and 'B' bands. To achieve attenuation above 3kHz of better than –100dB/decade for TIA/EIA-603 'C' bands (dashed outline), additional external circuitry is required, such as suggested in section 1.4.2.

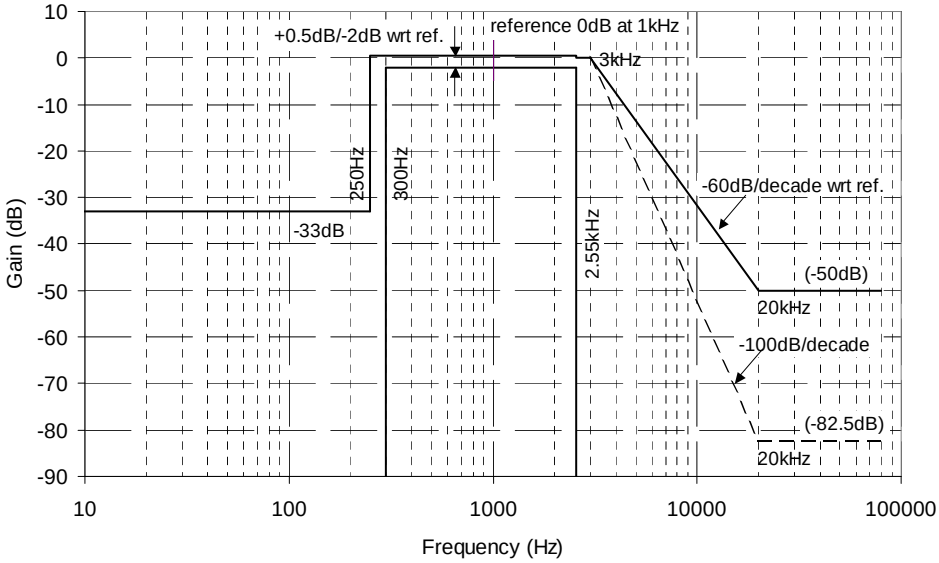


**Figure 9 12.5kHz Channel Audio Filter Response Template**

The CMX881 provides selectable pre-emphasis filtering of +6dB per octave from 300Hz to 3000Hz, matching the template shown in Figure 10.

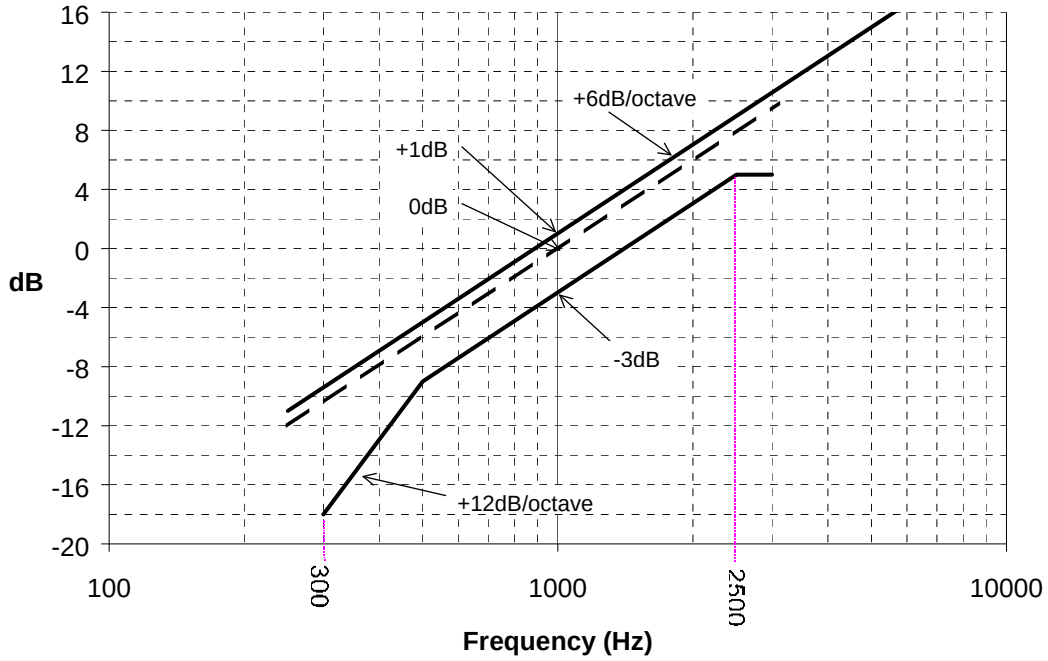


**Figure 10 Audio Frequency Pre-emphasis Template**

**Modulator Output Routing**

The sub-audio component can be combined with the voice band signal and this composite signal routed to both MOD_1 and MOD_2 outputs, or the sub-audio and voice band signal can be output separately (sub-audio to MOD_2 and voice band to MOD_1), in accordance with the settings of the Signal Routing register ($B1).

### 1.5.4.2 CTCSS Tone

The sub-audio CTCSS tone generated is defined in the Audio & CTCSS Control register ($C2). Table 2 lists the CTCSS tones and the corresponding value for programming the TX TONE bits.

### 1.5.4.3 DCS Code

A 23 or 24-bit sub-audio DCS Code can be generated, as defined by the 'DCS Code' words (P2.2-3) of the Programming register ($C8); the same DCS Code pattern is used for detection and transmission. The DCS Code is NRZ encoded at 134.4±0.4 bits/s, low pass filtered and added to the voice band signal, prior to passing the signal to the modulator output stages. Valid 23-bit DCS codes and the corresponding settings for the DCS Code Register are shown in Table 4, this does not preclude other codes being programmed. The least significant bit of the DCS code is transmitted first and the most significant bit is transmitted last. The CMX881 is able to encode and transmit either of the two DCS modulation modes defined by TIA/EIA-603 and described in Table 3.

To signal the end of the DCS transmission, the host should set the special sub-audio bits in the Audio & CTCSS Control register ($C2) to enable the DCS turn off tone for 150ms to 200ms. After this time period has elapsed the host should then disable DCS in the Mode register ($C1). Do not enable CTCSS in the Mode Control ($C1) register when transmitting the DCS turn off tone. To summarize, detection of DCS turn off tone requires the CTCSS decoder to be enabled, whereas generation of the DCS turn off tone requires the CTCSS encoder to be disabled.

#### 1.5.4.4 Transmitting Selcall Tones

The Selcall tone to be generated is defined in the Tx In-Band Tones register ($C3). The tone level is set in the Programming register (P1.0). The Selcall tone must be transmitted without other signals in the voice band, so when either In-band signalling bit is selected, the voice path is automatically disabled. The voice path bit should not be set to '0' at this time, as this produces anomalous results. However, the voice path can be disabled by setting bits 4 and 5 to '00' in the Signal Routing register ($B1). Table 5 shows valid Selcall tones, together with the values for programming the Selcall bits of the Tx In-Band Tones register.

Custom Selcall tone frequencies are set in the program register ($C8) P1.2-17. See section 1.6.20.2 for programming details.

#### 1.5.4.5 Transmitting FFSK/MSK Signals

The FFSK/MSK encoding operates in accordance with the bit settings in the Mode Control register ($C1). When enabled the MSK modulator begins transmitting data using the settings and values in the Tx Data register. Therefore, these registers should be programmed to the required value before transmission is enabled.

The CMX881 generates it's own internal data clock and converts the binary data into the appropriately phased frequencies, as shown in Figure 11 and Table 7. The binary data is taken from register $CA, most significant bit first. The following data words must be provided over the C-BUS within certain time limits to ensure the selected baud rate is maintained. The time limits will be dependent on the data coding being used, see Table 9.

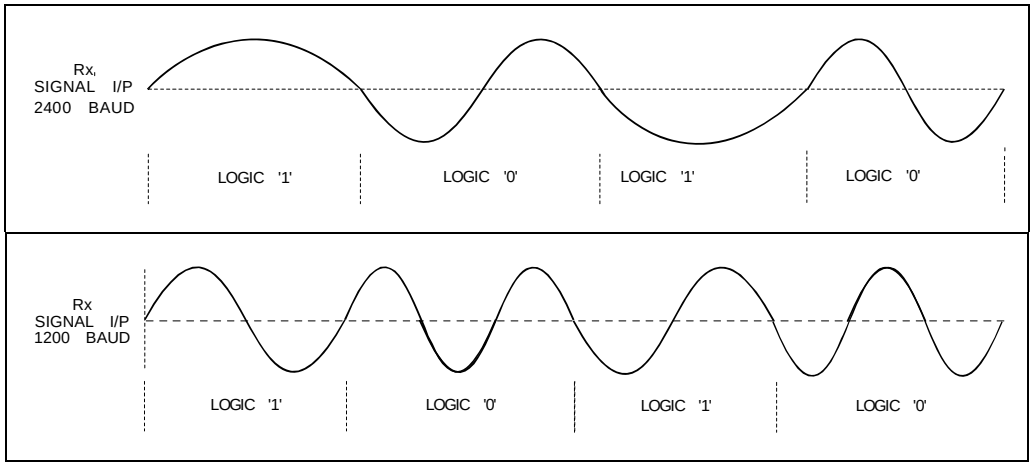


**Figure 11 Modulating Waveforms for 1200 and 2400 Baud FFSK/MSK Signals**

The table below shows the combinations of frequencies and number of cycles to represent each bit of data, for both baud rates.

**Table 7 Data Frequencies for each Baud Rate**

| Baud Rate | Data | Frequency | Number of Cycles |
|---|---|---|---|
| **1200 baud** | 1 | 1200Hz | one |
| | 0 | 1800Hz | one and a half |
| **2400 baud** | 1 | 1200Hz | half |
| | 0 | 2400Hz | one |

Note: FFSK may be transmitted in conjunction with a CTCSS or DCS sub-audio component.

#### 1.5.4.6 Transmitting DTMF Tones

The DTMF signals to be generated are defined in the TX TONE register ($C3). Single tones and twist (lower frequency tone reduced by 2dB) can be enabled by setting the appropriate bit in the $C3 register to '1'. The DTMF level is set in programming register P1.0. The DTMF tones must be transmitted on their own within the voice band, the host µC must disable other voice band signals prior to initiating transmission of the DTMF tones, and (if required) restore the voice band signals after the DTMF transmission is complete. Table 8 shows the DTMF tone pairs, together with the values for programming the 'Tone Pair' field of the TX TONE register.

**Table 8 DTMF Tone Pairs and Corresponding Tx Programming Codes**

| Tone Pair Code (Hex) | Key Pad Position | Low Tone (Hz) | High Tone (Hz) |
|---|---|---|---|
| 1 | 1 | 697 | 1209 |
| 2 | 2 | 697 | 1336 |
| 3 | 3 | 697 | 1477 |
| 4 | 4 | 770 | 1209 |
| 5 | 5 | 770 | 1336 |
| 6 | 6 | 770 | 1477 |
| 7 | 7 | 852 | 1209 |
| 8 | 8 | 852 | 1336 |
| 9 | 9 | 852 | 1477 |
| A | 0 | 941 | 1336 |
| B | * | 941 | 1209 |
| C | # | 941 | 1477 |
| D | A | 697 | 1633 |
| E | B | 770 | 1633 |
| F | C | 852 | 1633 |
| 0 | D | 941 | 1633 |

Note: Only the underlined tone is generated when the 'Single Tone' bit is enabled.

### 1.5.5 FFSK/MSK Data packeting

The CMX881 has a built in 15 bit CRC and 1 bit parity generator / checker to ease host processing during transmission and reception of data packets. The CRC / parity function can be used with any length message in both Tx and Rx modes. In Tx the host may reset, add to or send the 2 byte checksum at any byte boundary in the data sequence. In Rx the host may reset the checking circuit at any byte boundary and the CMX881 will indicate for each subsequent byte if the preceding bytes satisfied the CRC and parity requirements.

**Tx frame example:**

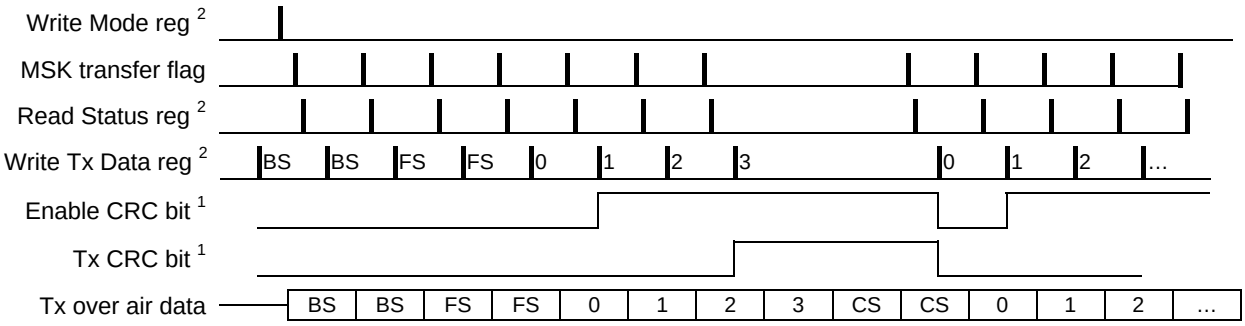


BS = Bit sync FS = Frame sync 0, 1, … Data bytes CS = Checksum

Notes: 1 The Tx CRC and Enable CRC bits are controlled by writing to the Tx Data register
2 Actions requiring a C-BUS transfer

**Rx frame example:**

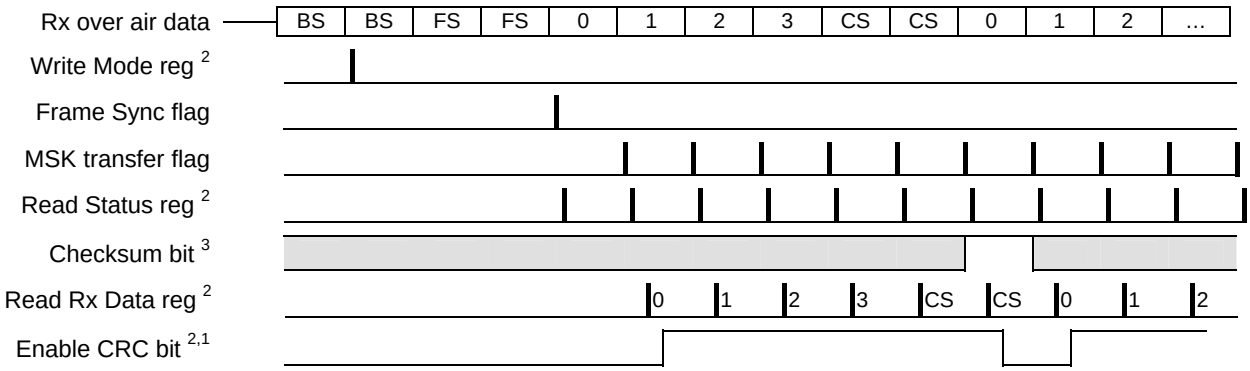


BS = Bit sync FS = Frame sync 0, 1, … Data bytes CS = Checksum

Notes: 1 The Enable CRC bit is controlled by writing to the Tx Data register
2 Actions requiring a C-BUS transfer
3 The Checksum bit is read from the Rx Data register

#### 1.5.5.1 Tx Hang bit

When transmitting FFSK/MSK data, the user should ensure that the data is terminated with a hang bit. This is recommended regardless of whether the on-chip data formatting is used. To do this, the host must set the 'Last Data' bit in the Tx Data register ($CA) when the message is required to end. This will append a hang bit onto the end of the current byte and generate (if enabled) an interrupt when the last Tx data has left the modulator.

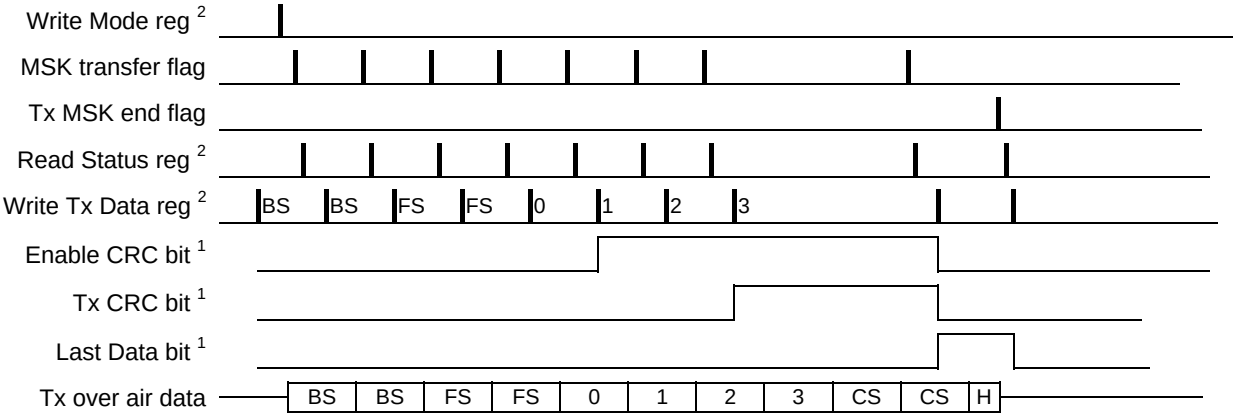


BS = Bit sync FS = Frame sync 0, 1, … Data bytes CS = Checksum H = Hang Bit

Notes: 1 The Tx CRC, Enable CRC and Last Data bits are changed by writing to the Tx Data register
2 Actions requiring a C-BUS transfer

#### 1.5.5.2 Data Buffer Timing

Data must be transferred at the rate appropriate to the signal type and data format. The CMX881 buffers signal data in the lower 8-bits of a 16-bit register. The CMX881 will issue interrupts to indicate when data is available or required. The host must respond to these interrupts within the maximum allowable latency for the signal type. Table 9 shows the maximum latencies for transferring signal data to maintain appropriate data throughput.

**Table 9 Maximum Data Transfer Latency**

| Data type | Max time to read from or write to data buffer | Data buffer size |
|---|---|---|
| 1200b/s MSK | 6.6ms | 8 bits |
| 2400b/s MSK | 3.3ms | 8 bits |

### 1.5.6 C-BUS Operation

This block provides for the transfer of data and control or status information between the CMX881's internal registers and the µC over the C-BUS serial interface. Each transaction consists of a single Register Address byte sent from the µC which may be followed by one or more data byte(s) sent from the µC to be written into one of the CMX881's Write Only Registers, or one or more data byte(s) read out from one of the CMX881's Read Only Registers, as illustrated in Figure 12.

Data sent from the µC on the Command Data line is clocked into the CMX881 on the rising edge of the Serial_Clock input. Reply Data sent from the CMX881 to the µC is valid when the Serial_Clock is high. The CSN line must be held low during a data transfer and kept high between transfers. The C-BUS interface is compatible with most common µC serial interfaces and may also be easily implemented with general purpose µC I/O pins controlled by a simple software routine.

The number of data bytes following an A/C byte is dependent on the value of the A/C byte. The most significant bit of the address or data are sent first. For detailed timings see section 1.8.1.

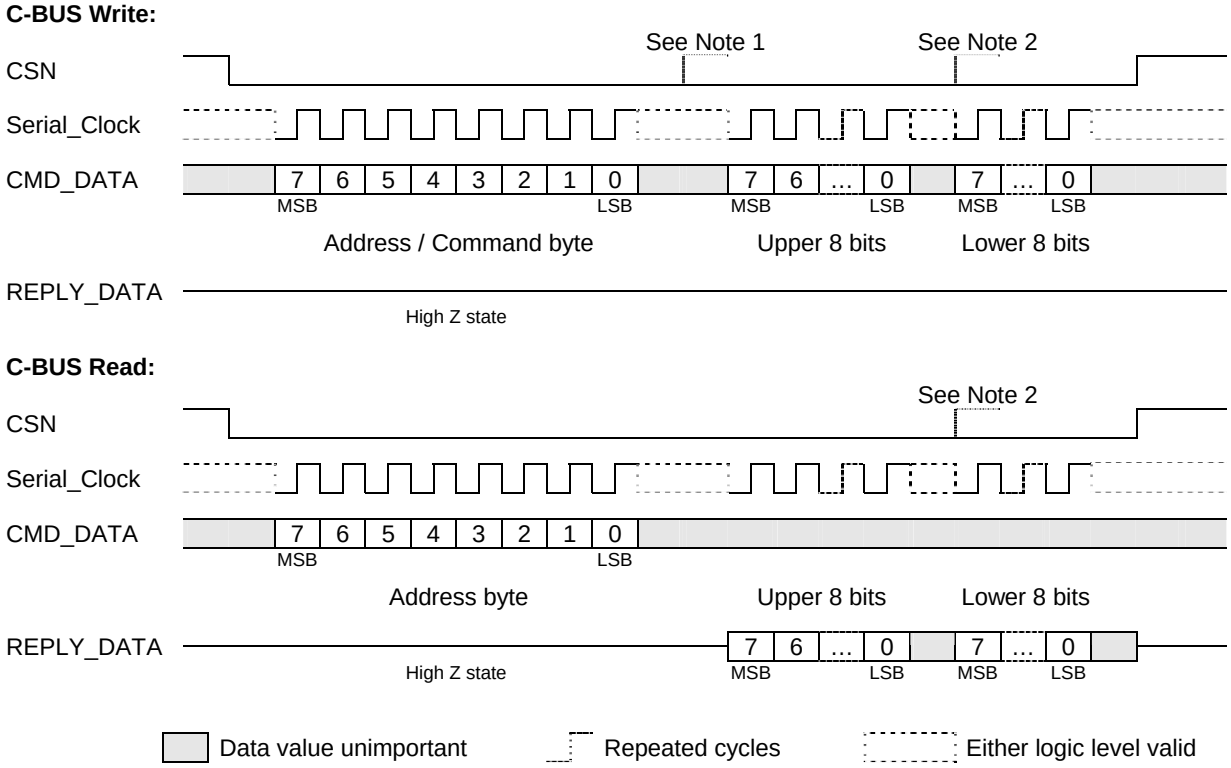


**Figure 12 C-BUS Transactions**

Notes:

1. For Command byte transfers only the first 8 bits are transferred ($01 = Reset).
2. For single byte data transfers only the first 8 bits of the data are transferred.
3. The CMD_DATA and REPLY_DATA lines are never active at the same time. The Address byte determines the data direction for each C-BUS transfer.
4. The Serial_Clock input can be high or low at the start and end of each C-BUS transaction.
5. The gaps shown between each byte on the CMD_DATA and REPLY_DATA lines in the above diagram are optional, the host may insert gaps or concatenate the data as required.

## 1.6 C-BUS Register Description

### 1.6.1 C-BUS Register Summary

**C-BUS Write Only Registers**

| ADDR. (hex) | REGISTER | Word Size (bits) |
|---|---|---|
| $01 | C-BUS RESET | 0 |
| $B0 | ANALOGUE GAIN | 16 |
| $B1 | SIGNAL ROUTING | 16 |
| $B2 | AUXILIARY ADC THRESHOLDS | 16 |
| $B3 | AUXILIARY ADC CONTROL | 8 |
| $C0 | POWER DOWN CONTROL | 16 |
| $C1 | MODE CONTROL | 16 |
| $C2 | AUDIO & CTCSS CONTROL | 16 |
| $C3 | TX IN-BAND TONES | 16 |
| $C7 | RESERVED REGISTER ADDRESS | 16 |
| $C8 | PROGRAMMING REGISTER | 16 |
| $CA | TX DATA | 16 |
| $CB | RESERVED REGISTER ADDRESS | 16 |
| $CD | AUDIO TONE | 16 |
| $CE | INTERRUPT MASK | 16 |
| $CF | RESERVED REGISTER ADDRESS | 16 |

The C-BUS addresses $C7, $CB and $CF are allocated for production testing and must not be accessed in normal operation.

**C-BUS Read Only Registers**

| ADDR (hex) | REGISTER | Word Size (bits) |
|---|---|---|
| $B4 | AUX ADC MONITOR DATA | 8 |
| $C5 | RX DATA | 16 |
| $C6 | STATUS | 16 |
| $C9 | RESERVED REGISTER ADDRESS | 16 |
| $CC | TONE STATUS | 16 |

**Interrupt Operation**

The CMX881 will issue an interrupt on the IRQN line when the IRQ bit (bit 15) of the Status register and the IRQ Mask bit (bit 15) are both set to ‘1’. The IRQ bit is set when the state of the interrupt flag bits in the Status register change from a '0' to a '1' and the corresponding mask bit(s) in the Interrupt Mask register is(are) set.

All interrupt flag bits in the Status register except the Programming Flag (bit 0) are cleared and the interrupt request is cleared following the command/address phase of a C-BUS read of the Status register. The Programming Flag bit is set to '1' only when it is permissible to write a new word to the Programming register.

### 1.6.2 $01 C-BUS RESET: address only.

The reset command has no data attached to it. It sets the device registers into the states listed below.

| Addr. | REG. | 15 | 14 | 13 | 12 | 11 | 10 | 9 | 8 | 7 | 6 | 5 | 4 | 3 | 2 | 1 | 0 |
|---|---|---|---|---|---|---|---|---|---|---|---|---|---|---|---|---|---|
| $B0 | ANALOGUE GAIN | 0 | 0 | 0 | 0 | 0 | 0 | 0 | 0 | 0 | 0 | 0 | 0 | 0 | 0 | 0 | 0 |
| $B1 | SIGNAL ROUTING | 0 | 0 | 0 | 0 | 0 | 0 | 0 | 0 | 0 | 0 | 0 | 0 | 0 | 0 | 0 | 0 |
| $B2 | AUXILIARY ADC THRESHOLDS | 1 | 1 | 1 | 1 | 1 | 1 | 1 | 1 | 0 | 0 | 0 | 0 | 0 | 0 | 0 | 0 |
| $B3 | AUXILIARY ADC TIMING | | | | | | | | | 0 | 0 | 0 | 0 | 0 | 0 | 0 | 0 |
| $B4 | AUX ADC MONITOR DATA | | | | | | | | | X | X | X | X | X | X | X | X |
| $C0 | POWER DOWN CONTROL | 0 | 0 | 0 | 0 | 0 | 0 | 0 | 0 | 0 | 0 | 0 | 0 | 0 | 0 | 0 | 0 |
| $C1 | MODE CONTROL | 0 | 0 | 0 | 0 | 0 | 0 | 0 | 0 | 0 | 0 | 0 | 0 | 0 | 0 | 0 | 0 |
| $C2 | AUDIO & CTCSS CONTROL | 0 | 0 | 0 | 0 | 0 | 0 | 0 | 0 | 0 | 0 | 0 | 0 | 0 | 0 | 0 | 0 |
| $C3 | TX IN-BAND TONES | 0 | 0 | 0 | 0 | 0 | 0 | 0 | 0 | 0 | 0 | 0 | 0 | 0 | 0 | 0 | 0 |
| $C5 | RX DATA | X | X | X | X | X | X | X | X | X | X | X | X | X | X | X | X |
| $C6 | STATUS | 0 | 0 | 0 | 0 | 0 | 0 | 0 | 0 | 0 | 0 | 0 | 0 | 0 | 0 | 0 | 0 |
| $C7 | Reserved Register Address | 0 | 0 | 0 | 0 | 0 | 0 | 0 | 0 | 0 | 0 | 0 | 0 | 0 | 0 | 0 | 0 |
| $C8 | PROGRAMMING REGISTER | 0 | 0 | 0 | 0 | 0 | 0 | 0 | 0 | 0 | 0 | 0 | 0 | 0 | 0 | 0 | 0 |
| $CA | TX DATA | 0 | 0 | 0 | 0 | 0 | 0 | 0 | 0 | 0 | 0 | 0 | 0 | 0 | 0 | 0 | 0 |
| $CC | TONE STATUS | 0 | 0 | 0 | 0 | 0 | 0 | 0 | 0 | 0 | 0 | 0 | 0 | 0 | 0 | 0 | 0 |
| $CD | AUDIO TONE | 0 | 0 | 0 | 0 | 0 | 0 | 0 | 0 | 0 | 0 | 0 | 0 | 0 | 0 | 0 | 0 |
| $CE | INTERRUPT MASK | 0 | 0 | 0 | 0 | 0 | 0 | 0 | 0 | 0 | 0 | 0 | 0 | 0 | 0 | 0 | 0 |
| $CF | Reserved Register Address | 0 | 0 | 0 | 0 | 0 | 0 | 0 | 0 | 0 | 0 | 0 | 0 | 0 | 0 | 0 | 0 |

Whilst the Programming Register word is cleared to zero by a general C-Bus reset, the Programming Register blocks are not initialised by general C-Bus resets. Initialisation of the Programming Register blocks is controlled by the Power Down Control register (see section 1.6.7).

### 1.6.3 $B0 ANALOGUE GAIN: 16-bit write-only

| Bit: | 15 | 14 | 13 | 12 | 11 | 10 | 9 | 8 | 7 | 6 | 5 | 4 | 3 | 2 | 1 | 0 |
|---|---|---|---|---|---|---|---|---|---|---|---|---|---|---|---|---|
| | Inv_1 | MOD_1 Attenuation | | | Inv_2 | MOD_2 Attenuation | | | 0 | Input Gain | | | Audio Output Attenuation | | | |

Bits 15 and 11 set the phase of the MOD_1 and MOD_2 outputs. When set to '0' the 'true' signal (0° phase shift) will be produced, when set to '1' the signal will be inverted (180° phase shift). This can be useful when interfacing with rf circuitry or when generating an inverted turn off tone for CTCSS. Any change will take place immediately after these bits are changed.

The output paths provide user programmable attenuation stages to independently adjust the output levels of the modulators. Finer level control of the MOD_1 and MOD_2 outputs can be achieved with the FINE OUTPUT GAIN 1 and FINE OUTPUT GAIN 2 registers (P4.2-3).

| Bit 14 | Bit 13 | Bit 12 | **MOD_1 Output Attenuation** |
|---|---|---|---|
| 0 | 0 | 0 | >40dB |
| 0 | 0 | 1 | 12dB |
| 0 | 1 | 0 | 10dB |
| 0 | 1 | 1 | 8dB |
| 1 | 0 | 0 | 6dB |
| 1 | 0 | 1 | 4dB |
| 1 | 1 | 0 | 2dB |
| 1 | 1 | 1 | 0dB |

| Bit 10 | Bit 9 | Bit 8 | **MOD_2 Output Attenuation** |
|---|---|---|---|
| 0 | 0 | 0 | >40dB |
| 0 | 0 | 1 | 12dB |
| 0 | 1 | 0 | 10dB |
| 0 | 1 | 1 | 8dB |
| 1 | 0 | 0 | 6dB |
| 1 | 0 | 1 | 4dB |
| 1 | 1 | 0 | 2dB |
| 1 | 1 | 1 | 0dB |

Bit 7 is reserved - set to 0.

Bits 6 to 4 control the input path programmable gain stage - useful when amplifying low power voice signals from the microphone inputs. Finer gain control can be achieved with the 'FINE INPUT GAIN' control register (P4.0). In receive mode it is recommended to set the gain to 0dB.

| Bit 6 | Bit 5 | Bit 4 | **Input Gain** |
|---|---|---|---|
| 0 | 0 | 0 | 0dB |
| 0 | 0 | 1 | 3.2dB |
| 0 | 1 | 0 | 6.4dB |
| 0 | 1 | 1 | 9.6dB |
| 1 | 0 | 0 | 12.8dB |
| 1 | 0 | 1 | 16.0dB |
| 1 | 1 | 0 | 19.2dB |
| 1 | 1 | 1 | 22.4dB |

| Bit 3 | Bit 2 | Bit 1 | Bit 0 | **Audio Output Attenuation** |
|---|---|---|---|---|
| 0 | 0 | 0 | 0 | >60dB |
| 0 | 0 | 0 | 1 | 44.8dB |
| 0 | 0 | 1 | 0 | 41.6dB |
| 0 | 0 | 1 | 1 | 38.4dB |
| 0 | 1 | 0 | 0 | 35.2dB |
| 0 | 1 | 0 | 1 | 32.0dB |
| 0 | 1 | 1 | 0 | 28.8dB |
| 0 | 1 | 1 | 1 | 25.6dB |
| 1 | 0 | 0 | 0 | 22.4dB |
| 1 | 0 | 0 | 1 | 19.2dB |
| 1 | 0 | 1 | 0 | 16.0dB |
| 1 | 0 | 1 | 1 | 12.8dB |
| 1 | 1 | 0 | 0 | 9.6dB |
| 1 | 1 | 0 | 1 | 6.4dB |
| 1 | 1 | 1 | 0 | 3.2dB |
| 1 | 1 | 1 | 1 | 0dB |

Bits 3 to 0 control the output path programmable attenuation stage to adjust the volume of the audio output signal. Finer volume control can be achieved with the 'FINE OUTPUT GAIN 1' control register (P4.2).

### 1.6.4 $B1 SIGNAL ROUTING: 16-bit write-only

| Bit: | 15 | 14 | 13 | 12 | 11 | 10 | 9 | 8 | 7 | 6 | 5 | 4 | 3 | 2 | 1 | 0 |
|---|---|---|---|---|---|---|---|---|---|---|---|---|---|---|---|---|
| | 0 | 0 | Tx MOD_1 and MOD_2 Routing | | 0 | 0 | 0 | 0 | 0 | 0 | Analogue i/p select | | AUDIO o/p select | | Ramp Up | Ramp Down |

Bits 15 and 14 reserved - set to 0.

Bits 13 and 12 select the routing of the transmit signals allowing 1 or 2 point modulation and interfaces.

| Bit 13 | Bit 12 | **Tx MOD_1 and MOD_2 routing** |
|---|---|---|
| 0 | 0 | Tx, MOD_1 and MOD_2 outputs set to bias. |
| 0 | 1 | Tx, In band signals to MOD_1, Subaudio signals to MOD_2 |
| 1 | 0 | Tx, In band and Subaudio to MOD_1, Subaudio signals to MOD_2 |
| 1 | 1 | Tx, In band and Subaudio to both MOD_1 and MOD_2 |

To route In-band and Subaudio to MOD_1 and Vbias to MOD_2, select b13 = 1 (b12 = 0 or = 1) and set MOD_2 attenuation to >40dB in the Analogue Gain register.

‘In-Band’ in this context refers to any of the signals; Voice, Selcall tone, DTMF etc.

Bits 11 to 6 are reserved - set to 0.

| Bit 5 | Bit 4 | **Analogue Input select** |
|---|---|---|
| 0 | 0 | No input selected (Input = $V_{BIAS}$) |
| 0 | 1 | Input amplifier 2 (Input_2 i/p) |
| 1 | 0 | Microphone (MIC i/p) |
| 1 | 1 | Discriminator (DISC i/p) |

| Bit 3 | Bit 2 | **AUDIO Output select** |
|---|---|---|
| 0 | 0 | No output selected (Output = $V_{BIAS}$) |
| 0 | 1 | Received Voice signal |
| 1 | 0 | MOD_1 signal (for Tx monitoring) |
| 1 | 1 | Reserved, do not use |

When bits 1 or 0 are set to '1' output signals are ramped up (bit 1) or ramped down (bit 0) to reduce transients in the transmitted signal. Time to ramp up / down is set in the 'Ramp Rate Control' section of the Programming register (P4.6).

### 1.6.5 $B2 AUXILIARY ADC THRESHOLDS: 16-bit write-only

| Bit: | 15 | 14 | 13 | 12 | 11 | 10 | 9 | 8 | 7 | 6 | 5 | 4 | 3 | 2 | 1 | 0 |
|---|---|---|---|---|---|---|---|---|---|---|---|---|---|---|---|---|
| | High Threshold [Range: 0 to 255] | | | | | | | | Low Threshold [Range: 0 to 255] | | | | | | | |

If the selected signal level exceeds the High Threshold, the ‘Signal High’ bit of the Status register will be set to 1. If the Signal level falls below the Low Threshold, the ‘Signal Low’ bit of the Status register will be set to 1. If the corresponding interrupt bit is enabled, a C-BUS interrupt will be generated. These status bits are cleared when the Status register is read. The behaviour of the CMX881 is not defined if the high threshold is less than the low threshold.

| | |
|---|---|
| Threshold resolution: | $V_{DD}$(A)/256 per LSB |
| Threshold accuracy: | ±2 LSB |
| Differential linearity: | ±1 LSB [monotonic] |

The ‘Auxiliary ADC Thresholds’ register must not be updated whilst the Auxiliary ADC is enabled.

### 1.6.6 $B3 AUXILIARY ADC CONTROL: 8-bit write-only

| Bit: | 7 | 6 | 5 | 4 | 3 | 2 | 1 | 0 |
|---|---|---|---|---|---|---|---|---|
| | Aux ADC i/p select | | Conversion Interval | | | | | |

The ‘Conversion Interval’ (bits 5 to 0) defines the time between measurements whilst the Auxiliary ADC is enabled. This allows the user to trade-off device power consumption with response time.

Auxiliary ADC power = 0.5mW/$V_{DD}$(A)/conversion (approximate)
Conversion Interval = 20.8µs per LSB. (approximate)

The user should set an interval to ensure that no part of a received signal is missed, so that the signal type can be correctly identified. If using the Rx Auto start-up feature the recommended maximum Conversion Interval is 125µs. The ‘Auxiliary ADC’ register must not be updated whilst the Aux ADC is enabled.

The Aux ADC i/p select (bits 7 to 6) control the input to the Auxiliary ADC. Control is independent of the Analogue i/p select bits and hence the Aux ADC can monitor any one of the 4 inputs independently.

| Bit 7 | Bit 6 | **Auxiliary ADC input from:** |
|---|---|---|
| 0 | 0 | Signal monitor (Sig_Monitor i/p) |
| 0 | 1 | Input amplifier 2 (Input_2 i/p) |
| 1 | 0 | Microphone (MIC i/p) |
| 1 | 1 | Discriminator (DISC i/p) |

### 1.6.7 $C0 POWER DOWN CONTROL: 16-bit write-only

| Bit: | 15 | 14 | 13 | 12 | 11 | 10 | 9 | 8 |
|---|---|---|---|---|---|---|---|---|
| | Input_2 amp | MIC amp | Disc amp | Input Gain | Output Fine Gain 1 | Output Fine Gain 2 | O/P Coarse Gain 1 | O/P Coarse Gain 2 |

| Bit: | 7 | 6 | 5 | 4 | 3 | 2 | 1 | 0 |
|---|---|---|---|---|---|---|---|---|
| | Audio Output | BIAS | Signal Processing | Prog Reg Save | Disable Xtal_N | Disable Clock_Out_N | Enable Aux ADC | Rx Auto start-up |

Bits 15 to 5 provide the power control of the specified blocks. If a bit is '1', the corresponding block is on, else it is powered down. A C-BUS or Power up reset clears all bits in this register to '0'.

If bit 5 is '0' the internal signal processing blocks are reset and placed into a power-save mode.

If bit 4 is clear to ‘0’, the program registers will be reset to the default state described below whenever the Signal Processing block comes out of power save (b5 0 → 1). To preserve the current settings of the Programming register values bit 4 should be set to a '1'. Setting bit 4 to ‘1’ prevents the Programming register values being reset when the Signal Processing block comes out of power save, such as during Rx Auto start-up. This facility should only be used if all the Programming register values have been initialised or programmed by the host µC prior to the signal processing block being put into power save.

Bits 3 and 2 control the xtal clock circuit. The xtal circuit is powered down by setting bit 3 to '1'. Note: The Clock/Xtal pin may be driven by an external clock source regardless of the setting of these bits. The Clock_Out pin is disabled (held low) by setting bit 2 to ‘1’. After a Power-up or C-BUS reset bits 2 and 3 are cleared to ‘0’, so that both the xtal circuit and clock output are enabled.

Bit 1 controls the Auxiliary ADC. If set to '1' the Auxiliary ADC will generate interrupts in accordance with the settings of the interrupt mask bits. If bit 1 is '0' the Auxiliary ADC is disabled and powered down.

Bit 0 controls Rx Auto start up. If bit 0 is set to '1' and the Aux ADC input rises above the ‘High Threshold’ the device will automatically enter receive mode and initiate Rx signal type identification for those signals enabled in the Mode register. The correct Aux ADC input, Rx signal routing and power down bits must be set for automatic receive start up to operate, the mode control bits (b1, b0) should be set to ‘01’ (Receive) in this case. If bit 0 is cleared to '0' the CMX881 will not automatically start-up and it is up to the host to

respond to Aux ADC interrupts in this case. Bit 0 must be set to '0' whilst writing through register $C8 - Programming Register.

**Initialisation of the Programming Register Blocks**
Removal of the signal processing block from reset (b5 0→ 1), with b4 kept low (= 0), will cause all of the programming register words (P0 – P4) to be reset to zero, except the following:

| | | | | | | | | | | | | | | | | | |
|---|---|---|---|---|---|---|---|---|---|---|---|---|---|---|---|---|---|
| P0.0 | Frame SYNC LSB | - | - | - | - | 0 | 0 | 0 | 0 | 1 | 1 | 0 | 1 | 0 | 1 | 1 | 1 |
| P0.1 | Frame SYNC MSB | - | - | - | - | 0 | 0 | 0 | 0 | 1 | 1 | 0 | 0 | 0 | 1 | 0 | 0 |
| P0.2 | Frame SYND LSB | - | - | - | - | 0 | 0 | 0 | 0 | 0 | 0 | 1 | 1 | 0 | 0 | 1 | 1 |
| P0.3 | Frame SYND MSB | - | - | - | - | 0 | 0 | 0 | 0 | 1 | 0 | 1 | 1 | 0 | 1 | 0 | 0 |
| P4.7 | Transmit Limiter Control | - | - | 1 | 1 | 1 | 1 | 1 | 1 | 1 | 1 | 1 | 1 | 1 | 1 | 1 | 1 |

This initiates the device with the MPT frame SYNC pattern of $C4D7 and the PAA frame SYND pattern of $B433. The transmit limiter value is initialised to the maximum limit.

### 1.6.8 $C1 MODE CONTROL: 16-bit write-only

| Bit: | 15 | 14 | 13 | 12 | 11 | 10 | 9 | 8 |
|---|---|---|---|---|---|---|---|---|
| | Enable Voice | In band signalling: Selcall, Tx DTMF | | Generate Audio Tone | Enable CTCSS | Enable DCS | Enable DCS Inverse | 0 |

| Bit: | 7 | 6 | 5 | 4 | 3 | 2 | 1 | 0 |
|---|---|---|---|---|---|---|---|---|
| | SYNC | SYND | SYNT | Enable 2400b/s | Enable 1200b/s | 0 | Mode Select | |

Bits 1 and 0 control the overall mode of the CMX881 according to the table below:

| Bit 1 | Bit 0 | **Device Mode** |
|---|---|---|
| 0 | 0 | Idle |
| 0 | 1 | Receive Mode |
| 1 | 0 | Transmit Mode |
| 1 | 1 | Reserved - do not use |

During transmit, only one signal type may be enabled for each of the sub-audio and voice bands, see Table 6, with the exception that "enable voice" must either be selected at all times or during transmission of audio tones or during Selcall tone transmissions or during DTMF transmissions. During receive the CMX881 will search for all signals enabled in this register and report those that are successfully decoded. See also Table 1 in section 1.5.3.

In transmit mode the CMX881 begins transmission of a selected signal immediately after it has been enabled. The host µC must ensure all associated data and control bits have been set to their required values before enabling the signal in this register.

Bits 4 and 3 control the modem functions of the CMX881 in accordance with the following table:

| Bit 4 | Bit 3 | **Tx - Transmitted signal** | **Rx - Monitored signal(s)** |
|---|---|---|---|
| 0 | 0 | None | None |
| 0 | 1 | MSK 1k2b/s | MSK 1k2b/s |
| 1 | 0 | MSK 2k4b/s | MSK 2k4b/s |
| 1 | 1 | Reserved | MSK 1k2 & 2k4b/s |

In transmit mode data transmission will start or finish (regardless of whether all data has been transmitted) immediately after the modem control bits are changed. To transmit a second data message the modem control bits must be set to '0', data bytes for the following message loaded, and the required bits set to '1'.

When MSK receive is enabled bits 5 to 7 allow the detection of the MSK SYND, SYNC and SYNT frame sync patterns respectively. Each frame sync pattern may be individually controlled so any combination of

the 3 patterns - SYND, SYNC (and it's inverse - SYNT) can be searched for. Once the frame sync pattern has been detected, all further bits are interpreted as data. To receive a second data message, the host must extract the length of the first message from the message, then switch back into sync detection mode by changing either bits 0 and 1 or bits 3 and 4 to '00' for at least 350µs, before returning those bits to their original condition. Re-acquisition of bit sync followed by frame sync will then precede the reception of the second data message. When transmitting MSK, bits 5 to 7 should be set to '0' and the bit sync and frame sync patterns set in the first four 8 bit transfers from the host - see section 1.5.5.

Bits 2 and 8 are reserved - set to '0'.

Bits 11 to 9 determine the sub-audio transmission / reception signalling:

| Bit 11 | Bit 10 | Bit 9 | **Tx - Transmitted signal:** | **Rx - Monitored signal(s):** |
|---|---|---|---|---|
| 0 | 0 | 0 | No Sub-Audio Transmitted | No Sub-audio Monitoring |
| 0 | 0 | 1 | Inverted DCS* | Inverted DCS* |
| 0 | 1 | 0 | DCS | DCS |
| 0 | 1 | 1 | Do not use | DCS + inv DCS* |
| 1 | 0 | 0 | CTCSS | CTCSS |
| 1 | 0 | 1 | Do not use | CTCSS + inv DCS* |
| 1 | 1 | 0 | Do not use | CTCSS + DCS |
| 1 | 1 | 1 | Do not use | CTCSS + DCS + inv DCS* |

* See Table 3 DCS Modulation Modes.

Bit 12 enables Audio tone generation (see section 1.6.14). This operates in transmit and receive modes. In transmit mode this bit will only enable the Audio Generator when no other voice band signals are being transmitted i.e. bits 14, 13, 4 and 3 set to '0'.

Bits 14 and 13 select the type of In band tone (Selcall or DTMF) to transmit or receive. When transmitting In band signals the voice path must be enabled by setting ‘Enable Voice’ bit 15 to '1'. To de-emphasise received in-band tones, both b15 of this register and b0 of the Programming register P1.0 must be set to '1'. Note that the pre-emphasis of In-band signals other than voice is not allowed when the 'Enable Voice' bit 15 is set to '1'.

| Bit 14 | Bit 13 | **Tx - Transmitted signal** | **Rx - Monitored signal** |
|---|---|---|---|
| 0 | 0 | No voice band tone transmitted | No voice band tones monitored |
| 0 | 1 | Selcall | Selcall |
| 1 | 0 | DTMF | Reserved |
| 1 | 1 | Reserved | Reserved |

When set to '1', bit 15 enables the voice path. In transmit mode the selected audio input is routed to the modulator outputs. In transmit mode bit 15, if set to '1', will be temporarily disabled (cleared to '0') whenever any of the bits 3, 4, 12, 13 and 14 are set to '1'. In receive mode the voice processing path is enabled to the audio output. In receive mode bit 15, if set to '1', will be temporarily disabled (cleared to '0') whenever bit 12 is set to '1'. It is up to the host µC to control bit 15 when voice band signals are received. Bits 15, 14 and 13 should not be enabled in the same command instruction.

When in receive mode, if Voice is enabled and Selcall tone detection is also selected, the voice processing quality (SINAD) is reduced. A 350µs delay must be inserted between enabling Voice and Selcall tone detection.

The Mode Control register ($C1) may be written to at any time (subject to C-BUS timing restrictions). If the enable bit of the currently decoded signal is cleared, the decoder is turned off. If it is subsequently re-enabled, the decoder will enter the appropriate signal acquisition phase.

The CMX881 will only detect signals when their amplitude is above the threshold set for each band (sub-audio and voice), as set in the program registers. Therefore even if valid tones or signals are present the CMX881 will ignore them unless they exceed the detect threshold. Time and level hysteresis is applied to reduce chattering in marginal conditions.

**Detection strategies used by the CMX881 whilst in receive mode:**
When in receive mode the CMX881 treats the received signal in two bands; Sub-audio (60-260Hz) and voice band (300-3kHz). For the sub-audio the CMX881 can monitor and decode CTCSS and DCS signals in parallel. Because certain FFSK bit patterns can mimic some Selcall tones the Selcall receiver is temporarily disabled when an FFSK frame sync is detected. The host must monitor the received data and restore Selcall (by setting bits 14 and 13 as required) when it has detected the end of data.

**Configuring the CMX881 for Automatic Receive Start-Up**
Prior to setting the CMX881 into Automatic Receive Start-Up mode, the Mode Control register should be clear (Tx and Rx modes disabled). Set up the Programming Register blocks as required. Write to the Powerdown Control register with the appropriate functions enabled or disabled, including Signal Processing bit clear (b5 = 0), Prog Reg Save bit set (b4 = 1) and the Rx Auto Start-Up bit set (b0 = 1). While the Signal Processing block is in its powersave condition, the Mode Control register should be set up for the appropriate signalling schemes to be processed and Rx mode selected (b1 = 0, b0 = 1). When the auto start-up is triggered, the signal processing bit in the Powerdown Control register will automatically be set (=1) and the selected receiver processing will start.

**Configuring and Changing Transmit or Receive Modes**

Bits 15-9 and 7-3 select the device function and bits 1,0 select the mode, transmit (TX), receive (RX) or IDLE. When IDLE mode is selected, all the function bits should also be cleared to ‘0’ by the host. If a mode change places the device into IDLE mode, at least 350 µs should elapse before changing the device again into an active mode (RX or TX). It is possible to transition between RX and TX modes without going through the IDLE mode.

All the Programming register words must be configured as required, in accordance with the procedures defined in section 1.6.20, whilst the Mode Control register ($C1) is set in IDLE mode.

In RX mode, concurrent signalling schemes are allowed, as described in section 1.5.3. Receive functions can be switched on or off at any time while in receive mode, by setting or clearing their respective enable bits in the Mode Control register.

In TX mode, only up to one of the in-band signalling schemes, plus "enable voice", and only up to one of the sub-audio signalling schemes should be selected, as described in section 1.5.4, table 6.

Special consideration is needed when changing from one in-band TX function to another whilst remaining in TX mode. To effect the change, set the current function to transmit a null signal, adjust settings for the next function as required, wait for at least 350µs, then select the new function and turn off the current function by writing to the Mode Control register with the current function enable bit cleared and the new function enable bit set.

- To select a null TX voice signal function, set Signal Routing register ($B1) bits 5,4 = 0,0.
- To select a null TX Selcall tone signal function, clear Tx In-Band Tones register ($C3) = 0.
- To select a null TX DTMF tone pair signal function, clear Tx In-Band Tones register ($C3) = 0 and select TX Selcall function [or select the null TX signal of the new function].
- To select a null TX MSK signal function, set TX DATA register ($CA) ‘last data’ bit 8 = 1, as described in sections 1.5.5.1 and 1.6.13.
- To start a new MSK data packet it is necessary to toggle between the MSK TX mode and IDLE mode or, if CTCSS or DCS require to be maintained, toggle between the MSK TX and null voice or null Selcall tone TX.

CTCSS sub-audio transmission is turned off by putting the device into IDLE mode (Mode Control register = 0) [or by setting the Audio and CTCSS Control register bits 7-0 = 0, to select CTCSS No Tone]. DCS transmission is normally ended by applying the special DCS turn-off tone. To turn off the special sub-audio DCS turn off tone, put the device into IDLE mode [or set the Audio & CTCSS Control register bits 7-0 = 0 and select CTCSS].

Some configurations of the Audio and CTCSS Control register ($C2) and the TX Data register ($CA) are decoded by the device at the start of the function's operation, so they must be set up before selecting the function in the Mode Control register.

| **Configuration features** | **Register & Bits** | **Action to instigate configuration change** |
|---|---|---|
| Voice filter and emphasis | $C2, bits 12-10 | Decode triggered by entering Voice mode from IDLE mode or from another function mode. |
| Selcall or DTMF using Pre-/De-Emphasis | $C2, bit 10 | Decode triggered by entering the in-band signalling mode from IDLE mode or from another function mode. |
| CTCSS tone | $C2, bits 5-0 | Decode triggered by selecting CTCSS RX mode. Decode of transmitted CTCSS tones is continuous in TX mode. |
| MSK tx initial bit sync data | $CA | Decode triggered by selecting MSK TX mode. |

In the case of MSK transmit functions, the data register must be updated with new data as described in sections 1.5.5 and 1.6.13. Subsequent changes to the other configurations defined above will only take effect when the relevant operation is re-started from IDLE mode or by switching to another mode.

Changes to other registers and configuration bits are permitted at any time, as appropriate. Normally the device will be configured prior to selecting the transmit or receive mode in the Mode Control register.

### 1.6.9 $C2 AUDIO & CTCSS CONTROL: 16-bit write-only

| Bit: | 15 | 14 | 13 | 12 | 11 | 10 | 9 | 8 | 7 | 6 | 5 | 4 | 3 | 2 | 1 | 0 |
|---|---|---|---|---|---|---|---|---|---|---|---|---|---|---|---|---|
| | 0 | 0 | 0 | Voice filter mode | | | Special Sub-Audio | | 0 | 0 | CTCSS tone | | | | | |

Bits 5 to 0 select the CTCSS tone to be used in both Tx and Rx modes, the range of valid addresses is 0-39 (in decimal).

In Tx the CTCSS tone number is used to select the CTCSS tone. If the tone number is outside the valid range no signalling will occur. Decoding of the CTCSS tone number is continuous, so changing the CTCSS tone number will cause the transmitted CTCSS tone to change accordingly.

In Rx the CTCSS tone number will be searched for when CTCSS is enabled in the Mode register and if detected, this number will be indicated in the Tone Status register $CC. The CTCSS tone number must be asserted before selecting CTCSS receive mode.

Bits 9 and 8 select special sub-audio tones in accordance with the following table.

| Bit 9 | Bit 8 | **Freq (Hz)** | **Special Sub-Audio tone** |
|---|---|---|---|
| 0 | 0 | - | None |
| 0 | 1 | 134.4 | DCS turn off tone |
| 1 | 0 | - | Reserved - do not set |
| 1 | 1 | Clone | CTCSS Tone clone mode (Rx only) |

- Selecting the 'DCS turn off tone' during DCS transmit will cause the DCS turn off tone to be transmitted; this will override the DCS data being transmitted. Select 'DCS turn off tone' in this register to enable detection of the DCS turn off tone during receive. CTCSS must be enabled in the Mode Control register to receive the 'DCS turn off tone'.
- If the Tone Clone™ mode is selected this allows the device in Rx to non-predictively detect any CTCSS frequency in the range of valid tones, the received tone number will be reported in the Tone Status register $CC. The narrowest bandwidth should be selected in Programming Register word P2.1.

The voice filter control bits 12 and 11 determine the Voice Band Filter mode applied to the voice signal before it is transmitted or after it has been received. Bit 10 controls the de-emphasis (Rx) or pre-emphasis (Tx) mode of the voice band filtering.

| Bit 12 | Bit 11 | Bit 10 | **Voice filter mode** |
|---|---|---|---|
| X | X | 0 | Disable de/pre-emphasis |
| X | X | 1 | Enable de/pre-emphasis |
| 0 | 0 | X | No filtering applied |
| 0 | 1 | X | In transmit mode:<br>HPF (to remove SA) + 12.5kHz channel filtering<br>In receive mode:<br>HPF (to remove SA) + Low pass filter |
| 1 | 0 | X | In transmit mode:<br>HPF (to remove SA) + 25.0kHz channel filtering<br>In receive mode:<br>HPF (to remove SA) + Low pass filter |
| 1 | 1 | X | Reserved – do not use |

The settings of bits 10 to 12 must be asserted before voice Tx or Rx mode is selected. To change the operating modes controlled by these bits, the Tx or Rx operation must be turned off, then after the appropriate period (see section 1.6.8), apply the changes to this register and turn on the new mode in the Mode Control register.

Bits 15 to 13 and 7 to 6 are reserved – set to '0'.

### 1.6.10 $C3 Tx In-Band Tones: 16-bit write-only

| Bit: | 15 | 14 | 13 | 12 | 11 | 10 | 9 | 8 | 7 | 6 | 5 | 4 | 3 | 2 | 1 | 0 |
|---|---|---|---|---|---|---|---|---|---|---|---|---|---|---|---|---|
| | Tx Selcall tone | | | | | 0 | 0 | 0 | 0 | 0 | Twist | Single | Tx DTMF tone | | | |

Bits 15 to 11 define the tone transmitted when Tx Selcall is enabled. The frequency is as defined in Table 5 Selcall Tones.

Bits 10 to 6 are reserved – set to ‘0’.

Bit 5 controls DTMF twist, when set to '0' the two tones are sent at the same level, when set to '1' the amplitude of the lower frequency tone is 2dB below the amplitude of the higher tone.

Bit 4 controls whether a single tone is generated when transmitting DTMF, when set to '0' dual tones are sent, when set to '1' the single tone identified in Table 8 is sent on it's own.

Bits 3 to 0 define the signals produced when Tx DTMF is enabled. The frequencies are as defined in Table 8 DTMF Tone Pairs and Corresponding Tx Programming Codes.

### 1.6.11 $C7 Reserved - Do not write to this register

### 1.6.12 $C8 PROGRAMMING REGISTER: 16-bit write-only

| Bit: | 15 | 14 | 13 | 12 | 11 | 10 | 9 | 8 | 7 | 6 | 5 | 4 | 3 | 2 | 1 | 0 |
|---|---|---|---|---|---|---|---|---|---|---|---|---|---|---|---|---|
| | First Word | Block Number | Block / Data | | Programming Data | | | | | | | | | | | |

See section 1.6.20 for a description of this register.

### 1.6.13 $CA TX DATA: 16-bit write-only

| Bit: | 15 | 14 | 13 | 12 | 11 | 10 | 9 | 8 | 7 | 6 | 5 | 4 | 3 | 2 | 1 | 0 |
|---|---|---|---|---|---|---|---|---|---|---|---|---|---|---|---|---|
| | 0 | 0 | 0 | 0 | 0 | En CRC | Tx CRC | Last Data | Tx Data Byte | | | | | | | |

Bits 15 to 11 are reserved, set to '0'.

Bits 10 to 8 control the MPT1327 compatible CRC / parity circuit: See section 1.5.5 for timing diagrams.
En CRC (bit 10):

Tx: This bit should be changed when updating this register with new data. If this bit is set to '0' the CRC / parity circuit will be reset, bits 7 to 0 will be passed to both the modulator and CRC / parity circuit after it has been reset. If set to '1' the CRC / parity circuit will not be reset and bits 7 to 0 will be passed to both the modulator and CRC / parity circuit.

Rx: In receive this bit should be changed before the interrupt for the next over-air byte occurs. If this bit is set to '0' the next received byte will be passed to the CRC / parity circuit after it has been reset. If this bit is set to '1' the next received byte will be passed to the CRC / parity circuit which will not be reset.

Tx CRC (bit 9): If this bit is set to '1' the Tx Data Byte (bits 7-0) is transmitted and also passed to the CRC and parity generator. The following 2 bytes transmitted are the 15 bits of CRC and the 1 bit of parity. The request to load more data into the CMX881 will be raised after the 2nd byte is passed to the modulator.

Last Data (bit 8): If this bit is set to '1' then the CMX881 will ignore bits 7 to 0, finish transmitting the current byte, append a hang bit and then turn off the FFSK modulator. At the end of transmitting the hang bit the CMX881 will set bit 7 of the Status register to '1' and an interrupt (if enabled) will be raised, the host may then wait a short time before shutting down the rf sections of the transmit path.

Tx Data Byte (bits 7 to 0) holds the next byte of MSK data to be transmitted. Outgoing data is continuous, whatever data is in bits 7 to 0 will be re-transmitted if the host does not provide required data in time. Transmission of current data will be completed before transmission of newly loaded data begins.

### 1.6.14 $CD AUDIO TONE: 16-bit write only

| Bit: | 15 | 14 | 13 | 12 | 11 | 10 | 9 | 8 | 7 | 6 | 5 | 4 | 3 | 2 | 1 | 0 |
|---|---|---|---|---|---|---|---|---|---|---|---|---|---|---|---|---|
| | 0 | 0 | 0 | 0 | Audio Tone | | | | | | | | | | | |

When the required bits of the Mode Control register ($C1) are set an audio tone will be generated with the frequency determined by bits (11-0) of this register in accordance with the formula below:

frequency = Audio Tone (i.e. 1Hz per LSB)

If bits 11-0 are programmed with '0' no tone (i.e. Vbias) will be generated when the Audio Tone is enabled. The Audio Tone frequency must only be set to generate frequencies from 300Hz to 3000Hz.

The host must suppress other data and set the correct audio routing before generating an audio tone and re-enable data and audio routing on completion of the audio tone. The timing of intervals between these actions is also controlled by the host μC.

This register may be written to whilst the audio tone is being generated, any change in frequency will take place after the C-BUS write to this register. This allows sequences (e.g. ring or alert tunes) to be generated for the local speaker (Tx or Rx via the AUDIO pin) or transmitted signal (via the MOD1/2 pins).

### 1.6.15 $CE INTERRUPT MASK: 16-bit write-only

| Bit: | 15 | 14 | 13 | 12 | 11 | 10 | 9 | 8 |
|---|---|---|---|---|---|---|---|---|
| | IRQ MASK | 0 | Rx Selcall detect MASK | 0 | Rx CTCSS detect MASK | Rx DCS detect MASK | Aux ADC High MASK | Aux ADC Low MASK |

| Bit: | 7 | 6 | 5 | 4 | 3 | 2 | 1 | 0 |
|---|---|---|---|---|---|---|---|---|
| | Tx MSK end MASK | Data transfer MASK | 0 | Rx 2400b/s detect MASK | Rx 1200b/s detect MASK | 0 | 0 | Prog Flag MASK |

| Bit | Value | Function |
|---|---|---|
| 15 | 1 | Enable selected interrupts |
| | 0 | Disable all interrupts (IRQN pin not activated) |
| 14 | | Reserved – Set to 0 |
| 13 | 1 | Enable interrupt when a change to a Selcall tone is detected as indicated by a '0' to '1' change of bit 13 of the Status register |
| | 0 | Disabled |
| 12 | 0 | Reserved - Set to 0 |
| 11 | 1 | Enable interrupt when a change to a programmed CTCSS tone is detected as indicated by a '0' to '1' change of bit 11 of the Status register |
| | 0 | Disabled |
| 10 | 1 | Enable interrupt on a change in the detect status of the DCS decoder as indicated by a '0' to '1' change of bit 10 of the Status register |
| | 0 | Disabled |
| 9, 8 | 1 | Enable interrupt when the corresponding Aux ADC status bit changes |
| | 0 | Disabled |
| 7 | 1 | Enable interrupt when MSK data transmission has ended |
| | 0 | Disabled |
| 6 | 1 | Enable interrupt when an MSK data transfer is required |
| | 0 | Disabled |
| 5 | 0 | Reserved - Set to 0 |
| 4 | 1 | Enable interrupt when a valid 2400b/s frame sync is detected |
| | 0 | Disabled |
| 3 | 1 | Enable interrupt when a valid 1200b/s frame sync is detected |
| | 0 | Disabled |
| 2,1 | 0 | Reserved - Set to 0 |
| 0 | 1 | Enable interrupt when Prog Flag bit of the Status register changes from '0' to '1' (see Programming register $C8) |
| | 0 | Disabled |

**The following 4 registers are read only**

### 1.6.16 $B4 AUX ADC MONITOR DATA: 8-bit read-only

| Bit: | 7 | 6 | 5 | 4 | 3 | 2 | 1 | 0 |
|---|---|---|---|---|---|---|---|---|
| | Signal Monitor Data | | | | | | | |

This data holds the result of the last measurement performed by the auxiliary ADC.

The signal processor must be on to read Aux ADC data, so Power Down Control register b5 must be set to ‘1’. This is independent of whether Tx or Rx modes are selected.

### 1.6.17 $C6 STATUS: 16-bit read-only

| Bit: | 15 | 14 | 13 | 12 | 11 | 10 | 9 | 8 |
|---|---|---|---|---|---|---|---|---|
| | IRQ | 0 | Selcall state change | 0 | CTCSS state change | DCS state change | Aux ADC Monitor High | Aux ADC Monitor Low |

| Bit: | 7 | 6 | 5 | 4 | 3 | 2 | 1 | 0 |
|---|---|---|---|---|---|---|---|---|
| | Tx MSK end | MSK data transfer required | 0 | Rx 2400b/s | Rx 1200b/s | Rx data information | | Programming Flag |

This word holds the current status of the CMX881: the value read out is only valid when bit 5 of the Power Down Control register ($C0) is set to '1'. Changes in the Status register will cause the IRQ bit (bit 15) to be set to '1' if the corresponding interrupt mask bit is enabled. An interrupt request is issued on the IRQN pin when the IRQ bit is '1' and the IRQ MASK bit (bit 15 of register $CE) is set to '1'.

Bits 1 to 15 of the Status register are cleared to '0' after the Status register is read. Bit 0 is only cleared by writing to the Programming Register.

Bits 14, 12 and 5 are reserved.

Bits 13, 11 and 10 indicate that a Selcall, CTCSS or DCS event caused the interrupt, the host should then read the Tones Status register ($CC) for further information. In transmit these bits will be set to '0'. Detection of the DCS turn off tone and removal of DCS turn off tone are both flagged as DCS events in the Status register, not as CTCSS events.

Aux ADC High (bit 9) and Aux ADC Low (bit 8) reflect the recent history of the Aux ADC level, with respect to the high and low thresholds. The most recent Aux ADC reading can be read from $B4.

| Aux ADC Monitor High | Aux ADC Monitor Low | **Aux ADC history since last reading:** |
|---|---|---|
| 0 | 0 | Neither threshold crossed |
| 0 | 1 | Signal gone below low threshold |
| 1 | 0 | Signal gone above high threshold |
| 1 | 1 | Signal gone below low threshold and above high threshold |

In Tx mode bit 7 will be set when the last bit of MSK data has been transmitted. Note; this bit will only be set if bit 8 of the Tx Data register ($CA) is set at the appropriate time. In Rx mode this bit will be set to '0'.

Bit 6 indicates that new transmit data is required (in Tx mode) or received data is ready to be read (in Rx mode). For continuous transmission or reception of information, a data transfer should be completed within the time appropriate for that data (see Table 9 Maximum Data Transfer Latency).

Bits 4 and 3 indicate the received data rate after a valid frame sync pattern has been detected. Bits 2 and 1 indicate the received frame sync pattern detected.

| Bit 4 | Bit 3 | Data type | Bit 2 | Bit 1 | Received sync pattern: |
|---|---|---|---|---|---|
| 0 | 0 | none | Reserved | | |
| 0 | 1 | 1200b/s | 0 | 0 | Reserved |
| | | | 0 | 1 | SYNC |
| 1 | 0 | 2400b/s | 1 | 0 | SYNT |
| | | | 1 | 1 | SYND |
| 1 | 1 | Reserved | Reserved | | |

Programming Flag, bit 0: The Programming Register ($C8) should only be written to when bit 0 is set to '1' (with both Mode select bits set low – See register $C8). Writing to the Programming Register ($C8) clears bit 0 to '0'. Bit 0 is restored to '1' when the programming action is complete, normally within 250µs**,** when it is then safe to write to the Programming Register.

### 1.6.18 $C5 RX DATA: 16-bit read-only

| Bit: | 15 | 14 | 13 | 12 | 11 | 10 | 9 | 8 | 7 | 6 | 5 | 4 | 3 | 2 | 1 | 0 |
|---|---|---|---|---|---|---|---|---|---|---|---|---|---|---|---|---|
| | 0 | 0 | 0 | 0 | 0 | 0 | Rx CRC | 0 | Rx Data Byte | | | | | | | |

Bits 15 to 10 and 8 are reserved.

Rx CRC (bit 9) indicates the validity of the received data bytes since the En CRC bit has been set, a ‘1’ indicates a valid CRC and parity bit, a ‘0’ indicates that the received CRC and parity bits do not match the locally calculated values - see section 1.5.5.

Rx Data Byte (bits 7 to 0) holds the most recent byte of decoded MSK data. Received data is continuous, if the data is not read before the next data is received the current data will be over-written.

### 1.6.19 $CC TONES STATUS: 16-bit read-only

| Bit: | 15 | 14 | 13 | 12 | 11 | 10 | 9 | 8 | 7 | 6 | 5 | 4 | 3 | 2 | 1 | 0 |
|---|---|---|---|---|---|---|---|---|---|---|---|---|---|---|---|---|
| | Detected Selcall tone frequency | | | | | Sub-Audio Status | | | 0 | 0 | Detected CTCSS code | | | | | |

This word holds the current status of the CMX881 sub-audio and Selcall sections. This word should be read by the host after an interrupt caused by a DCS, CTCSS or Selcall event.

The value in bits 5 to 0, Detected CTCSS code, identifies the detected sub-audio tone by its position in Table 2 CTCSS Tones. If bits 5 to 0 = '000000' there is no CTCSS tone currently being detected. If bits 5 to 0 = '110111' (= 55 in decimal) this indicates that an Invalid Tone has been detected. An Invalid Tone is any tone in the subaudio band which is not the selected subaudio tone. A change in the state of bits 5-0 to Invalid Tone from the no tone condition will not cause Status register ($C6), b11 to be set to '1'. Any other change in the state of bits 5-0 will cause the Status register ($C6), b11 to be set to '1'.

A detected Selcall frequency is indicated by the value in bits 15 to 11, ‘Detected Selcall tone frequency’, identifies the frequency by its position in Table 5 Selcall Tones. If bits 15 to 11 = '00000' there is no Selcall tone currently being detected. A change in the state of bits 15 to 11 will cause bit 13 of the Status register ($C6), ‘Selcall State Change’, to be set to '1', unless the change is between Unrecognised Tone and No Tone.

Bits 10 to 8 indicate the DCS and special sub-audio tone status. The Status register ($C6) will indicate the type of signal detected. If DCS or special CTCSS tones are detected they will be indicated in bits 10 to 8 according to the table below and bits 5 to 0 will be set to '000000'. If a normal CTCSS tone is detected bits 10 to 8 will be set to '000' and bits 5 to 0 will indicate the decoded tone. A change in the state of bits 10 to 8 will cause the DCS state change bit of the Status register to be set to '1'. During DCS receive, the device can flag an interrupt when the DCS code fails to be recognised. This may be due to

code dropout. The turn off tone may be flagged shortly after, if the transmission is ending. Alternatively the DCS link may be restored and DCS detection will be flagged again.

| Bit 10 | Bit 9 | Bit 8 | **Sub-Audio status** | |
|---|---|---|---|---|
| 0 | 0 | 0 | No DCS or special CTCSS detected | |
| 0 | 0 | 1 | Reserved | |
| 0 | 1 | 0 | DCS sequence detected | Only enabled with DCS |
| 0 | 1 | 1 | inverted DCS sequence detected | Only enabled with DCS |
| 1 | 0 | 0 | Reserved | |
| 1 | 0 | 1 | 134.4Hz DCS turn off tone detected | Only enabled with DCS |
| 1 | 1 | 0 | Reserved | |
| 1 | 1 | 1 | Reserved | |

When the relevant detection mode is not enabled, the associated bits will be set to '0'. In Tx mode this register will be set to '0'.

Bits 7 and 6 are reserved.

During DCS receive, the device can flag an interrupt when the DCS code fails to be recognised. This may be due to code dropout. The turn off tone may be flagged shortly after, if the transmission is ending. Alternatively the DCS link may be restored and DCS detection will be flagged again.

### 1.6.20 $C8 PROGRAMMING REGISTER: 16-bit write-only

| Bit: | 15 | 14 | 13 | 12 | 11 | 10 | 9 | 8 | 7 | 6 | 5 | 4 | 3 | 2 | 1 | 0 |
|---|---|---|---|---|---|---|---|---|---|---|---|---|---|---|---|---|
| | First Word | Block Num. | Block Num. or Data | | Programming Data | | | | | | | | | | | |

This register is used for programming various gains, levels, offset compensations, tones and codes. The programmed values are initialised in accordance with the settings described in section 1.6.7 (Power Down Control), when the signal processing block is taken out of reset and the Prog Reg Save bit is clear (= 0).

The Signal Processing function and the XTAL clock circuit must both be enabled in order to write to the Programming Register, so Power Down Control register bit 5 must be set to '1' and bit 3 must be set to '0'. All other interrupt sources should be disabled while loading the programming register blocks.

The Programming Register should only be written to when the Programming Flag bit (bit 0) of the Status register is set to '1' and the Rx and Tx modes are disabled (bits 0 and 1 of the Mode Control register both '0'). The Programming Flag is cleared when the Programming Register is written to. When the corresponding programming action has been completed (normally within 250μs) the CMX881 will set the flag back to '1' to indicate that it is now safe to write the next programming value. The Programming Register must not be written to while the Programming Flag bit is '0'. Programming is done by writing a sequence of 16-bit words to the Programming Register, in the order shown in the following tables. Writing data to the Programming Register must be performed in the order shown for each of the blocks, however the order in which the blocks are written is not critical. If later words in a block do not require updating the user may stop programming that block when the last change has been performed. e.g. If only 'Fine output gain 1' needs to be changed the host will need to write to P4.0, P4.1 and P4.2 only.

The user must not exceed the defined word counts for each block. The word P4.8 is allocated for production testing and must not be accessed in normal operation.

The high order bits of each word define which block the word belongs to, and if it is the first word of that block:

| Bit 15 | Bit 14 | Bit 13 | Bit 12 | Bit 11 – Bit 0 |
|---|---|---|---|---|
| 1 | X | X | X | 1st data for each block |
| 0 | X | X | X | 2nd and following data |
| X | 1 | 0 | 0 | Write to block 0 (12 bit words) |
| X | 1 | 0 | 1 | Write to block 1 (12 bit words) |
| X | 1 | 1 | 0 | Write to block 2 (12 bit words) |
| X | 1 | 1 | 1 | Reserved - do not use |
| X | 0 | Write to | | block 4 (14 bit words) |

**Block 0 – Modem Configuration:**

| Bit: | 15 | 14 | 13 | 12 | 11 | 10 | 9 | 8 | 7 | 6 | 5 | 4 | 3 | 2 | 1 | 0 |
|---|---|---|---|---|---|---|---|---|---|---|---|---|---|---|---|---|
| P0.0 | 1 | 1 | 0 | 0 | 0 | | | | MSK SYNC / SYNT LSB | | | | | | | |
| P0.1 | 0 | 1 | 0 | 0 | 0 | | | | MSK SYNC / SYNT MSB | | | | | | | |
| P0.2 | 0 | 1 | 0 | 0 | 0 | | | | MSK SYND LSB | | | | | | | |
| P0.3 | 0 | 1 | 0 | 0 | 0 | | | | MSK SYND MSB | | | | | | | |

**Block 1 –Selcall Setup:**

| Bit: | 15 | 14 | 13 | 12 | 11 | 10 | 9 | 8 | 7 | 6 | 5 | 4 | 3 | 2 | 1 | 0 |
|---|---|---|---|---|---|---|---|---|---|---|---|---|---|---|---|---|
| P1.0 | 1 | 1 | 0 | 1 | Audio band Tx level | | | | | | | | | | | Emph |
| P1.1 | 0 | 1 | 0 | 1 | 0 | | Audio band detect threshold | | | | | | Selcall detect bandwidth | | | |
| P1.2 | 0 | 1 | 0 | 1 | 0 | Programmable Selcall Repeat Tone | | | | | | | | | | |
| P1.3 | 0 | 1 | 0 | 1 | 0 | Programmable Selcall Tone 0 | | | | | | | | | | |
| P1.4 | 0 | 1 | 0 | 1 | 0 | Programmable Selcall Tone 1 | | | | | | | | | | |
| P1.5 | 0 | 1 | 0 | 1 | 0 | Programmable Selcall Tone 2 | | | | | | | | | | |
| P1.6 | 0 | 1 | 0 | 1 | 0 | Programmable Selcall Tone 3 | | | | | | | | | | |
| P1.7 | 0 | 1 | 0 | 1 | 0 | Programmable Selcall Tone 4 | | | | | | | | | | |
| P1.8 | 0 | 1 | 0 | 1 | 0 | Programmable Selcall Tone 5 | | | | | | | | | | |
| P1.9 | 0 | 1 | 0 | 1 | 0 | Programmable Selcall Tone 6 | | | | | | | | | | |
| P1.10 | 0 | 1 | 0 | 1 | 0 | Programmable Selcall Tone 7 | | | | | | | | | | |
| P1.11 | 0 | 1 | 0 | 1 | 0 | Programmable Selcall Tone 8 | | | | | | | | | | |
| P1.12 | 0 | 1 | 0 | 1 | 0 | Programmable Selcall Tone 9 | | | | | | | | | | |
| P1.13 | 0 | 1 | 0 | 1 | 0 | Programmable Selcall Tone 10 | | | | | | | | | | |
| P1.14 | 0 | 1 | 0 | 1 | 0 | Programmable Selcall Tone 11 | | | | | | | | | | |
| P1.15 | 0 | 1 | 0 | 1 | 0 | Programmable Selcall Tone 12 | | | | | | | | | | |
| P1.16 | 0 | 1 | 0 | 1 | 0 | Programmable Selcall Tone 13 | | | | | | | | | | |
| P1.17 | 0 | 1 | 0 | 1 | 0 | Programmable Selcall Tone 14 | | | | | | | | | | |
| P1.18 | 0 | 1 | 0 | 1 | 0 | Reserved, set to zero | | | | | | | | | | |

**Block 2 – CTCSS and DCS Setup:**

| Bit: | 15 | 14 | 13 | 12 | 11 | 10 | 9 | 8 | 7 | 6 | 5 | 4 | 3 | 2 | 1 | 0 |
|---|---|---|---|---|---|---|---|---|---|---|---|---|---|---|---|---|
| P2.0 | 1 | 1 | 1 | 0 | CTCSS and DCS Tx level | | | | | | | | | | | |
| P2.1 | 0 | 1 | 1 | 0 | DCS 24 | 0 | CTCSS and DCS detect threshold | | | | | | CTCSS detect bandwidth | | | |
| P2.2 | 0 | 1 | 1 | 0 | DCS Code bits 11 – 0 | | | | | | | | | | | |
| P2.3 | 0 | 1 | 1 | 0 | DCS Code bits 23/22 – 12 | | | | | | | | | | | |
| P2.4 | 0 | 1 | 1 | 0 | Sub-audio drop out time | | | | 0 | | | | | | | |

**Block 3 – Reserved. Do not use.**

**Block 4 – Gain and Offset Setup:**

| Bit: | 15 | 14 | 13 | 12 | 11 | 10 | 9 | 8 | 7 | 6 | 5 | 4 | 3 | 2 | 1 | 0 |
|---|---|---|---|---|---|---|---|---|---|---|---|---|---|---|---|---|
| P4.0 | 1 | 0 | Fine Input Gain | | | | | | | | | | | | | |
| P4.1 | 0 | 0 | Reserved - set to '0' | | | | | | | | | | | | | |
| P4.2 | 0 | 0 | Fine Output Gain 1 | | | | | | | | | | | | | |
| P4.3 | 0 | 0 | Fine Output Gain 2 | | | | | | | | | | | | | |
| P4.4 | 0 | 0 | Output 1 Offset Control | | | | | | | | | | | | | |
| P4.5 | 0 | 0 | Output 2 Offset Control | | | | | | | | | | | | | |
| P4.6 | 0 | 0 | Ramp Rate Control | | | | | | | | | | | | | |
| P4.7 | 0 | 0 | Limiter Setting (all 1's = Vbias +/- 0.5 Vdd) | | | | | | | | | | | | | |
| P4.8 | 0 | 0 | Special Programming Register (Production Test Only) | | | | | | | | | | | | | |

### 1.6.20.1 PROGRAMMING REGISTER Block 0 – Modem Configuration:

**$C8 (P0.0-3) MSK Frame SYNC / SYNT and SYND**

| Bit: | 15 | 14 | 13 | 12 | 11 | 10 | 9 | 8 | 7 | 6 | 5 | 4 | 3 | 2 | 1 | 0 |
|---|---|---|---|---|---|---|---|---|---|---|---|---|---|---|---|---|
| P0.0 | 1 | 1 | 0 | 0 | 0 | | | | MSK SYNC / SYNT LSB | | | | | | | |
| P0.1 | 0 | 1 | 0 | 0 | 0 | | | | MSK SYNC / SYNT MSB | | | | | | | |
| P0.2 | 0 | 1 | 0 | 0 | 0 | | | | MSK SYND LSB | | | | | | | |
| P0.3 | 0 | 1 | 0 | 0 | 0 | | | | MSK SYND MSB | | | | | | | |

Bits 7 to 0 set the three 16-bit Frame Sync patterns used in Rx MSK data. Bit 7 of the MSB is compared to the earliest received data. Note: SYNT is the bitwise inverse of SYNC. After a power on reset SYNC is set to $C4D7 (MPT) and SYND is set to $B433 (PAA), if Powerdown Control bit 4 is clear when signal processing is enabled (See section 1.6.7).

### 1.6.20.2 PROGRAMMING REGISTER Block 1 – Selcall Setup:

**$C8 (P1.0) Voice band tones Tx Level**

| Bit: | 15 | 14 | 13 | 12 | 11 | 10 | 9 | 8 | 7 | 6 | 5 | 4 | 3 | 2 | 1 | 0 |
|---|---|---|---|---|---|---|---|---|---|---|---|---|---|---|---|---|
| P1.0 | 1 | 1 | 0 | 1 | Voice band tones Tx level | | | | | | | | | | | Emph |

Bits 11 (MSB) to 1 (LSB) set the transmitted Selcall, DTMF, Audio Tone and MSK signal level (pk-pk) with a resolution of $V_{DD}$(A)/2048 per LSB (1.465mV per LSB at $V_{DD}$(A)=3V). Valid range for this value is 0 to 1536.

Bit 0 controls Rx Selcall de-emphasis. When set to '0' the signal going to the Selcall tone detector is not de-emphasised. When voice processing is enabled in the Mode register, de/pre-emphasis is enabled in the Audio & Device Address register and this bit (b0) is set to '1', signals going to the Selcall tone detector are de-emphasised in accordance with Figure 6.

**$C8 (P1.1) Selcall Detect Bandwidth and Audio Band Detect Threshold**

| Bit: | 15 | 14 | 13 | 12 | 11 | 10 | 9 | 8 | 7 | 6 | 5 | 4 | 3 | 2 | 1 | 0 |
|---|---|---|---|---|---|---|---|---|---|---|---|---|---|---|---|---|
| P1.1 | 0 | 1 | 0 | 1 | 0 | | Audio band detect threshold | | | | | | Selcall detect bandwidth | | | |

The 'detect threshold' bits (bits 9 to 4) set the minimum Selcall and/or MSK signal level that will be detected. The levels are set according to the formula:

$$\text{Minimum Level} = \text{Detect Threshold} \times 3.63\text{mV rms at } V_{DD}(A) = 3V$$

The Selcall detected bandwidth is set in accordance with the following table:

| | Bit 3 | Bit 2 | Bit 1 | Bit 0 | BANDWIDTH Will Decode | BANDWIDTH Will Not Decode |
|---|---|---|---|---|---|---|
| | 1 | 0 | 0 | 0 | ±1.1% | ±2.4% |
| Recommended for EEA ⇒ | **1** | **0** | **0** | **1** | **±1.3%** | **±2.7%** |
| | 1 | 0 | 1 | 0 | ±1.6% | ±2.9% |
| | 1 | 0 | 1 | 1 | ±1.8% | ±3.2% |

**$C8 (P1.2-17) Programmable Selcall Tones**

| Bit: | 15 | 14 | 13 | 12 | 11 | 10 | 9 | 8 | 7 | 6 | 5 | 4 | 3 | 2 | 1 | 0 |
|---|---|---|---|---|---|---|---|---|---|---|---|---|---|---|---|---|
| P1.2-17 | 0 | 1 | 0 | 1 | 0 | Programmable Selcall Tone | | | | | | | | | | |
| | | | | | | N (see below) | | | | | | | R (see below) | | | |

These words set the programmable Selcall tones used in transmit and receive. The frequency is set in bits 11-0 for each word according to the formula:

N = Integer part of (0.042666 x frequency)

R = (0.042666 x frequency - N) x 6000 / frequency (round to nearest integer)

Example: For 1010Hz, N = 43, R = 1. The programmed tones should only be set to frequencies between 400Hz and 3000Hz. It is possible to programme frequencies outside these limits but the programmed transmitter signal levels and accuracy and receiver thresholds and decode bandwidths may not be applicable – see section 1.8.1, AC parameters of the Selcall Tone Detector and of the Selcall Tone Encoder.

### 1.6.20.3 PROGRAMMING REGISTER Block 2 – CTCSS and DCS Setup:

**$C8 (P2.0) CTCSS and DCS TX LEVEL**

| Bit: | 15 | 14 | 13 | 12 | 11 | 10 | 9 | 8 | 7 | 6 | 5 | 4 | 3 | 2 | 1 | 0 |
|---|---|---|---|---|---|---|---|---|---|---|---|---|---|---|---|---|
| P2.0 | 1 | 1 | 1 | 0 | CTCSS and DCS Level | | | | | | | | | | | |

Bits 11 (MSB) to 0 (LSB) set the transmitted CTCSS or DCS sub-audio signal level (pk-pk) with a resolution of $V_{DD}(A)/16384$ per LSB (0.183mV per LSB at $V_{DD}(A)=3V$, giving a range 0 to 749.8mV pk-pk).

**$C8 (P2.1) CTCSS TONE BW AND LEVEL**

| Bit: | 15 | 14 | 13 | 12 | 11 | 10 | 9 | 8 | 7 | 6 | 5 | 4 | 3 | 2 | 1 | 0 |
|---|---|---|---|---|---|---|---|---|---|---|---|---|---|---|---|---|
| P2.1 | 0 | 1 | 1 | 0 | DCS 24 | 0 | CTCSS and DCS detect threshold | | | | | | CTCSS detect bandwidth | | | |

Bit 11, DCS 24, sets the length of DCS code transmitted or searched for. When this bit is set to '1' 24 bit codes are transmitted and decoded. When this bit is set to '0' 23 bit codes are used.

The 'detect threshold' bits (bits 9 to 4) set the minimum CTCSS or DCS signal level that will be detected. The levels are set according to the formula:

$$\text{Minimum Level} = \text{Detect Threshold} \times 2\text{mV rms at } V_{DD}(A) = 3V$$

The CTCSS detected tone bandwidth is set in accordance with the following table:

| | Bit 3 | Bit 2 | Bit 1 | Bit 0 | BANDWIDTH Will Decode | BANDWIDTH Will Not Decode |
|---|---|---|---|---|---|---|
| Recommended for Tone Cloning™ ⇒ | 0 | 1 | 1 | 0 | ±0.5% | ±1.8% |
| | 0 | 1 | 1 | 1 | ±0.8% | ±2.1% |
| Recommended for CTCSS ⇒ | **1** | **0** | **0** | **0** | **±1.1%** | **±2.4%** |
| | 1 | 0 | 0 | 1 | ±1.3% | ±2.7% |
| | 1 | 0 | 1 | 0 | ±1.6% | ±2.9% |
| | 1 | 0 | 1 | 1 | ±1.8% | ±3.2% |

**$C8 (P2.2-3) DCS CODE (LOWER) and DCS CODE (UPPER)**

| Bit: | 15 | 14 | 13 | 12 | 11 | 10 | 9 | 8 | 7 | 6 | 5 | 4 | 3 | 2 | 1 | 0 |
|---|---|---|---|---|---|---|---|---|---|---|---|---|---|---|---|---|
| P2.2 | 0 | 1 | 1 | 0 | DCS Data (bits 11-0) | | | | | | | | | | | |
| P2.3 | 0 | 1 | 1 | 0 | DCS Data (bits 23/22-12) | | | | | | | | | | | |

These words set the DCS code to be transmitted or searched for. The least significant bit (bit 0) of the DCS code is transmitted or compared first and the most significant bit is transmitted or compared last. Note that DCS Data bit 23 is only used when bit 11 (DCS 24) of P2.1 is set to '1'.

**$C8 (P2.4) SUBAUDIO DROP OUT TIME**

| Bit: | 15 | 14 | 13 | 12 | 11 | 10 | 9 | 8 | 7 | 6 | 5 | 4 | 3 | 2 | 1 | 0 |
|---|---|---|---|---|---|---|---|---|---|---|---|---|---|---|---|---|
| P2.4 | 0 | 1 | 1 | 0 | Subaudio Drop Out Time | | | | 0 | | | | | | | |

The Subaudio Drop Out Time defines the time that the sub-audio signal detection can drop out before loss of sub-audio is asserted. The period is set according to the formula:

$$\text{Time} = \text{Subaudio Drop Out Time} \times 8.0\text{ms} \qquad [\text{range 0 to 120ms}]$$

The setting of this register defines the maximum drop out time that the device can tolerate. The setting of this register also determines the de-response time, which is typically 90ms longer than the programmed drop out time.

#### 1.6.20.4 PROGRAMMING REGISTER Block 3 – Reserved

#### 1.6.20.5 PROGRAMMING REGISTER Block 4 – Gain and Offset Setup

**$C8 (P4.0) FINE INPUT GAIN**

| Bit: | 15 | 14 | 13 | 12 | 11 | 10 | 9 | 8 | 7 | 6 | 5 | 4 | 3 | 2 | 1 | 0 |
|---|---|---|---|---|---|---|---|---|---|---|---|---|---|---|---|---|
| P4.0 | 1 | 0 | Fine Input Gain (unsigned integer) | | | | | | | | | | | | | |

Gain = 20 × log([32768-IG]/32768)dB IG is the unsigned integer value in the 'Fine Input Gain' field

Fine input gain adjustment should be kept within the range 0 to -3.5dB.

**$C8 (P4.1) Reserved**

| Bit: | 15 | 14 | 13 | 12 | 11 | 10 | 9 | 8 | 7 | 6 | 5 | 4 | 3 | 2 | 1 | 0 |
|---|---|---|---|---|---|---|---|---|---|---|---|---|---|---|---|---|
| P4.1 | 0 | 0 | Reserved - set to '0' | | | | | | | | | | | | | |

This register is reserved and should be set to '0'.

**$C8 (P4.2-3) FINE OUTPUT GAIN 1 and FINE OUTPUT GAIN 2**

| Bit: | 15 | 14 | 13 | 12 | 11 | 10 | 9 | 8 | 7 | 6 | 5 | 4 | 3 | 2 | 1 | 0 |
|---|---|---|---|---|---|---|---|---|---|---|---|---|---|---|---|---|
| P4.2 | 0 | 0 | Fine Output Gain 1 (unsigned integer) | | | | | | | | | | | | | |
| P4.3 | 0 | 0 | Fine Output Gain 2 (unsigned integer) | | | | | | | | | | | | | |

Gain = 20 × log([32768-OG]/32768)dB OG is the unsigned integer value in the 'Fine Output Gain' field

Fine output gain adjustment should be kept within the range 0dB to -3.5dB.

**$C8 (P4.4-5) OUTPUT 1 OFFSET and OUTPUT 2 OFFSET**

| Bit: | 15 | 14 | 13 | 12 | 11 | 10 | 9 | 8 | 7 | 6 | 5 | 4 | 3 | 2 | 1 | 0 |
|---|---|---|---|---|---|---|---|---|---|---|---|---|---|---|---|---|
| P4.4 | 0 | 0 | 2's complement offset for MOD_1, resolution = $V_{DD}$(A)/65536 per LSB | | | | | | | | | | | | | |
| P4.5 | 0 | 0 | 2's complement offset for MOD_2, resolution = $V_{DD}$(A)/65536 per LSB | | | | | | | | | | | | | |

The programmed value is subtracted from the output signal. Can be used to compensate for inherent offsets in the output path via MOD_1 (Output 1 Offset) and MOD_2 (Output 2 Offset). It is recommended that the offset correction is kept within the range +/-50mV.

**$C8 (P4.6) RAMP RATE CONTROL**

| Bit: | 15 | 14 | 13 | 12 | 11 | 10 | 9 | 8 | 7 | 6 | 5 | 4 | 3 | 2 | 1 | 0 |
|---|---|---|---|---|---|---|---|---|---|---|---|---|---|---|---|---|
| P4.6 | 0 | 0 | Ramp Rate Up Control (RRU) | | | | | | | Ramp Rate Down control (RRD) | | | | | | |

The ramp-up rate and ramp-down rates can be independently programmed. The ramp rates apply to all the analogue output ports. They only affect those ports being turned on (ramp-up) or turned off (ramp down). The ramp rates should be programmed before ramping any outputs.

Time to ramp-up to full gain = (1 + RRU) × 1.333ms
Time to ramp down to zero gain = (1 + RRD) × 1.333ms

Ramp up starts from when transmit mode starts (Mode Control Register bit 1 set = '1'). Ramp down starts from when transmit mode is turned off (Mode Control Register bit 1 cleared = '0').

### $C8 (P4.7) TRANSMIT LIMITER CONTROL

| Bit: | 15 | 14 | 13 | 12 | 11 | 10 | 9 | 8 | 7 | 6 | 5 | 4 | 3 | 2 | 1 | 0 |
|---|---|---|---|---|---|---|---|---|---|---|---|---|---|---|---|---|
| P4.7 | 0 | 0 | Limiter Setting, resolution = $V_{DD}$(A)/16384 per LSB | | | | | | | | | | | | | |

This unsigned number sets the clipping point (maximum deviation from the centre value) for the MOD_1 and MOD_2 pins. The maximum setting ($1FFF) is +/- $V_{DD}$(A)/2 i.e. output limited from 0 to $V_{DD}$(A).

The limiter is set to maximum following a C-BUS Reset or a Power Up Reset. The limiter is applied to the composite inband and subaudio signal, not just the voice signal. The levels of internally generated signals must be limited by setting appropriate transmit levels.

### $C8 (P4.8) Special Programming Register – do not access.

## 1.7 Application Notes

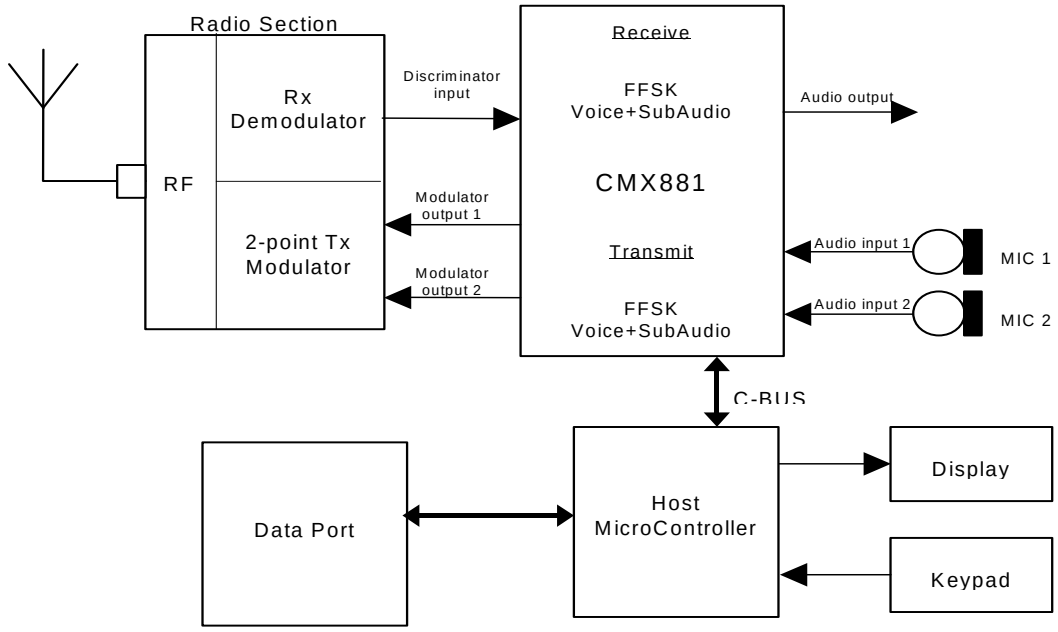


**Figure 13 Possible PMR Configuration**

### 1.7.1 CRC and Parity information

15 bit CRC is used with the inbuilt data packeting with the following generator polynomial:

$x^{15} + x^{14} + x^{13} + x^{11} + x^{4} + x^{2} + x^{0}$

A 15 bit remainder is calculated for previous bytes sent. When the CMX881 is instructed to send the CRC these 15 bits are added onto the end of the message with the least significant bit inverted.

The $16^{th}$ bit of the checksum is an even parity bit calculated from the message data and 15 bit CRC result (including the inverted last bit of the CRC).

In receive the 15 bit CRC is calculated and even parity is generated at each byte boundary. If the calculated receive CRC is zero and the parity bits match the CRC bit is set to indicate a correctly decoded message.

## 1.8 Performance Specification

### 1.8.1 Electrical Performance

The performance data are target figures, that may change subject to the outcome of device evaluation.

**Absolute Maximum Ratings**
Exceeding these maximum ratings can result in damage to the device.

| | Min. | Max. | Unit |
|---|---|---|---|
| Supply: $V_{DD}$(D)- $V_{SS}$(D) | –0.3 | 7.0 | V |
| $V_{DD}$(A)- $V_{SS}$(A) | –0.3 | 7.0 | V |
| Voltage on any pin to $V_{SS}$(D) | –0.3 | $V_{DD}$(D) + 0.3 | V |
| Voltage on any pin to $V_{SS}$(A) | –0.3 | $V_{DD}$(A) + 0.3 | V |
| Current into or out of $V_{DD}$(A), $V_{SS}$(A), $V_{DD}$(D) and $V_{SS}$(D) | –30 | +30 | mA |
| Current into or out of any other pin | –20 | +20 | mA |
| Voltage differential between power supplies: | | | |
| $V_{DD}$(D) and $V_{DD}$(A) | 0 | 0.3 | V |
| $V_{SS}$(D) and $V_{SS}$(A) | 0 | 50 | mV |

| D6 Package (SSOP) | Min. | Max. | Unit |
|---|---|---|---|
| Total Allowable Power Dissipation at Tamb = 25°C | | 1490 | mW |
| ... Derating | | 14.9 | mW/°C |
| Storage Temperature | –55 | +125 | °C |
| Operating Temperature | –40 | +85 | °C |

| E1 Package (TSSOP) | Min. | Max. | Unit |
|---|---|---|---|
| Total Allowable Power Dissipation at Tamb = 25°C | | 1110 | mW |
| ... Derating | | 11.1 | mW/°C |
| Storage Temperature | –55 | +125 | °C |
| Operating Temperature | –40 | +85 | °C |

**Operating Limits**
Correct operation of the device outside these limits is not implied.

| | Notes | Min. | Max. | Unit |
|---|---|---|---|---|
| Supply ($V_{DD}$ - $V_{SS}$) | | 2.7 | 5.5 | V |
| Operating Temperature | | –40 | +85 | °C |
| Clock/Xtal Frequency | 11 | 18.3 | 18.6 | MHz |

**Notes:** 11 Nominal clock frequency is 18.432MHz.

**Operating Characteristics**

For the following conditions unless otherwise specified:

External components as recommended in Figure 2.
Maximum load on digital outputs = 30pF.
Xtal Frequency = 18.432MHz ±0.01% (100ppm).
$V_{DD}$ = 2.7V to 5.5V; Tamb = –40°C to +85°C.
Signal levels are defined for Vdd = 3V.
Signal levels track with supply voltage, so scale accordingly
Reference Signal Level = 308mV rms at 1kHz with $V_{DD}$ = 3V.
Signal to Noise Ratio (SNR) in bit rate bandwidth.
Input stage gain = 0dB.
Output stage attenuation = 0dB.

| DC Parameters | Notes | Min. | Typ. | Max. | Unit |
|---|---|---|---|---|---|
| **Supply Current** | | | | | |
| $I_{DD}$(D) ($V_{DD}$ = 3.0V) | 21 | | 4.5 | 8.0 | mA |
| $I_{DD}$(A) ($V_{DD}$ = 3.0V) | 21 | | 1.0 | 2.0 | mA |
| $I_{DD}$(D) (All Power-saved) ($V_{DD}$ = 3.0V) | 21 | | 2.0 | 10 | µA |
| $I_{DD}$(A) (All Power-saved) ($V_{DD}$ = 3.0V) | 21 | | 2.0 | 10 | µA |
| **C-BUS Interface** | | | | | |
| Input Logic ‘1’ | | 70% | | | $V_{DD}$ |
| Input Logic ‘0’ | | | | 30% | $V_{DD}$ |
| Input Leakage Current (Logic ‘1’ or ‘0’) | 21 | –1.0 | | 1.0 | µA |
| Input Capacitance | | - | | 7.5 | pF |
| Output Logic ‘1’ ($I_{OH}$ = 120µA) | | 90% | | | $V_{DD}$ |
| Output Logic ‘0’ ($I_{OL}$ = 360µA) | | | | 10% | $V_{DD}$ |
| “Off” State Leakage Current | 21 | | | 10 | µA |
| IRQN (Vout = $V_{DD}$(D)) | 21 | –1.0 | | 1.0 | µA |
| REPLY_DATA (output HiZ) | 21 | –1.0 | | 1.0 | µA |
| **CLOCK_OUT** | | | | | |
| Output Logic ‘1’ ($I_{OH}$ = 120µA) | | 90% | | | $V_{DD}$ |
| ($I_{OH}$ = 1mA) | | 80% | | | $V_{DD}$ |
| Output Logic ‘0’ ($I_{OL}$ = 360µA) | | | | 10% | $V_{DD}$ |
| ($I_{OL}$ = -1.5mA) | | | | 15% | $V_{DD}$ |
| **CLOCK/XTAL** | 22 | | | | |
| Input Logic ‘1’ | | 70% | | | $V_{DD}$ |
| Input Logic ‘0’ | | | | 30% | $V_{DD}$ |
| Input current (Vin = $V_{DD}$) | | | | 40 | µA |
| Input current (Vin = $V_{SS}$) | | –40 | | | µA |
| **$V_{BIAS}$** | 23 | | | | |
| Output voltage offset wrt $V_{DD}$/2 ($I_{OL}$ < 1µA) | | -2% | | +2% | $V_{DD}$ |
| Output impedance | | | 22 | | kΩ |

**Notes:**
21 Tamb = 25°C, not including any current drawn from the device pins by external circuitry.
22 Characteristics when driving the CLOCK/XTAL pin with an external clock source.
23 Applies when utilising $V_{BIAS}$ to provide a reference voltage to other parts of the system. When using $V_{BIAS}$ as a reference, $V_{BIAS}$ must be buffered. $V_{BIAS}$ must always be decoupled with a capacitor as shown in Figure 3.

| AC Parameters | | Notes | Min. | Typ. | Max. | Unit |
|---|---|---|---|---|---|---|
| **CLOCK/XTAL Input** | | | | | | |
| 'High' pulse width | | 31 | 21 | | | ns |
| 'Low' pulse width | | 31 | 21 | | | ns |
| Input impedance (at 18.432MHz) | | | | | | |
| Powered-up | Resistance | | | 150 | | kΩ |
| | Capacitance | | | 20 | | pF |
| Powered-down | Resistance | | | 300 | | kΩ |
| | Capacitance | | | 20 | | pF |
| Clock frequency | | | | 18.432 | | MHz |
| Clock stability/accuracy | | | | | ±100 | ppm |
| Clock start up (from power-save) | | | | 400 | | ms |
| **CLOCK_OUT Output** | | | | | | |
| CLOCK/XTAL input to CLOCK_OUT timing: | | | | | | |
| (in high to out high) | | 32 | | 15 | | ns |
| (in low to out low) | | 32 | | 15 | | ns |
| 'High' pulse width | | 33 | 22 | 27.13 | 33 | ns |
| 'Low' pulse width | | 33 | 22 | 27.13 | 33 | ns |
| **$V_{BIAS}$** | | | | | | |
| Start up time (from power-save) | | | | 30 | | ms |
| **Microphone, Input_2 and Disc Inputs (MIC, INPUT_2, DISC)** | | | | | | |
| Input impedance | | 34 | | 1 | | MΩ |
| Input signal range | | 35 | 10 | | 90 | $\%V_{DD}$ |
| Feedback load resistance (pins 12, 14 & 16) | | | 80 | | | kΩ |
| Amplifier open loop voltage gain (I/P = 1mV rms at 100Hz) | | | | 60 | | dB |
| Unity gain bandwidth | | | | 1.0 | | MHz |
| **Programmable Input Gain Stage** | | 36 | | | | |
| Gain (at 0dB) | | | −0.5 | 0 | 0.5 | dB |
| Cumulative Gain Error (wrt attenuation at 0dB) | | | −1.0 | | 1.0 | dB |

**Notes:**

31 Timing for an external input to the CLOCK/XTAL pin.
32 CLOCK/XTAL input driven by external source.
33 18.432MHz XTAL fitted.
34 With no external components connected
35 After multiplying by gain of input circuit, with external components connected.
36 Gain applied to signal at output of buffer amplifier, pin 12, 14 or 16

| AC Parameters (cont.) | Notes | Min. | Typ. | Max. | Unit |
|---|---|---|---|---|---|
| **Modulator Outputs 1 and 2 and Audio Output (MOD_1, MOD_2, AUDIO)** | | | | | |
| Power-up to output stable | 37 | | 50 | 100 | µs |
| **Modulator Attenuators** | | | | | |
| Attenuation (at 0dB) | 39 | –1.0 | 0 | 1.0 | dB |
| Cumulative Attenuation Error (wrt attenuation at 0dB) | | –0.6 | | 0.6 | dB |
| Output Impedance Enabled | 38 | | 600 | | Ω |
| Output Impedance Disabled | 38 | | 500 | | kΩ |
| Output current range ($V_{DD}$ = 3.0V) | | -125 | | 125 | µA |
| Output voltage range | 40 | 0.5 | | $V_{DD}$–0.5 | V |
| Load resistance | | 20 | | | kΩ |
| **Audio Attenuator** | | | | | |
| Attenuation (at 0dB) | 39 | –1.0 | 0 | 1.0 | dB |
| Cumulative Attenuation Error (wrt attenuation at 0dB) | | –1.0 | | 1.0 | dB |
| Output Impedance Enabled | 38 | | 600 | | Ω |
| Output Impedance Disabled | 38 | | 500 | | kΩ |
| Output current range ($V_{DD}$ = 3.0V) | | -125 | | 125 | µA |
| Output voltage range | 40 | 0.5 | | $V_{DD}$–0.5 | V |
| Load resistance | | 20 | | | kΩ |

**Notes:**

37 Power-up refers to issuing a C-BUS command to turn on an output. These limits apply only if $V_{BIAS}$ is on and stable. At power supply switch-on, the default state is for all blocks, except the XTAL and C-BUS interface, to be in placed in power-save mode.

38 Small signal impedance, at $V_{DD}$ = 3.0V and Tamb = 25°C.

39 Wrt the signal at the feedback pin of the selected input port.

40 With output driving a 20kΩ load to $V_{DD}$/2.

| AC Parameters (cont.) | Notes | Min. | Typ. | Max. | Unit |
|---|---|---|---|---|---|
| **Auxiliary ADC (Signal Monitor)** | | | | | |
| **8 Bit ADC Mode** | | | | | |
| Resolution | | | 8 | | Bits |
| Input Range | | 10% | | 90% | $V_{DD}$(A) |
| Conversion time | 41 | | 20.8 | | µs |
| Input impedance | | | | | |
| Resistance | | | 10 | | MΩ |
| Capacitance | | | 5 | | pF |
| Zero error (input offset to give ADC output = 0) | | –20 | | +20 | mV |
| Integral Non-linearity | 42 | | | 2 | LSB |
| | 43 | | | 4 | LSB |
| Differential Non-linearity | 42 | | | 1 | LSB |
| | 43 | | | 3 | LSB |
| Source output impedance | 44 | | | 24 | kΩ |
| **Level Threshold Detect Mode** | | | | | |
| Threshold Resolution | | | 8 | | Bits |
| Upper threshold range (VTH) | 45 | VTL | | $V_{DD}$(A) | V |
| Lower threshold range (VTL) | 45 | $V_{SS}$(A) | | VTH | V |
| Signal Monitor change to IRQ | 46 | | | 120 | µs |
| Signal Monitor change to Receiver-Turn-On | 47 | | | 60 | µs |

**Notes:**

41 With clock frequency of 18.432MHz.

42 Vdd(A) >= 3.0V.

43 Vdd(A) < 3.0V.

44 Denotes output impedance of the driver of the Signal Monitor input, to ensure < 1 bit additional error under nominal conditions.

45 Upper threshold > Lower threshold

46 Time from Signal Monitor input rising above Upper Threshold or falling below Lower Threshold, to IRQN being asserted.

47 Time from Signal Monitor input rising above Upper Threshold to receiver path powering up, settling and starting automatic signal type identification.

| AC Parameters (cont.) | | Notes | Min. | Typ. | Max. | Unit |
|---|---|---|---|---|---|---|
| **Receiver Signal Type Identification** | | | | | | |
| Probability of correctly identifying signal type | (SNR = 12dB) | | | >>99.9 | | % |
| **CTCSS Detector** | | | | | | |
| Sensitivity | (Pure Tone) | 51 | | -26 | | dB |
| Response Time | (Composite Signal) | 52 | | 140 | 250 | ms |
| De-response Time | (Composite Signal) | 52, 55 | | 210 | | ms |
| Dropout immunity | | 55 | | 160 | | ms |
| Frequency Range | | | 60 | | 260 | Hz |
| **SELCALL Detector** | | | | | | |
| Sensitivity | (Pure Tone) | 53 | | -26 | | dB |
| Response Time | (Good Signal) | | | 35 | | ms |
| De-response Time | (Good Signal) | | | | 52 | ms |
| Dropout immunity | | | | | 20 | ms |
| Frequency Range | (Selcall) | 56 | 400 | | 3000 | Hz |
| **DCS Decoder** | | | | | | |
| Sensitivity | | 51 | 58 | | | mVp-p |
| Bit-Rate Sync Time | | | | 2 | | edges |
| **FFSK/MSK Decoder** | | | | | | |
| Signal Input Dynamic Range | | 54 | 100 | | 800 | mVrms |
| Bit Error Rate | (SNR = 20dB) | 54 | | <1 | | $10^{-8}$ |
| Receiver Synchronisation | (SNR = 12dB) | | | | | |
| Probability of bit 16 being correct | | | | >99.9 | | % |

**Notes:**

51 Sub-Audio Detection Level threshold set to 16mV.

52 Composite signal = 308mV rms at 1kHz + 75mV rms Noise + 31mV rms Sub-Audio signal. Noise bandwidth = 5kHz Band Limited Gaussian.

53 Selcall Tone Detection Level threshold set to 16mV.

54 $V_{DD}$ (A) = 3.0V, for a “101010101 ... 01” pattern measured at the input amplifier feedback pin (12). Signal level scales with $V_{DD}$ (A). See Figure 15 for variation of BER with SNR.

55 With sub-audio dropout time (P2.4) set to ≥120ms. The typical dropout immunity is approximately 40ms more than the programmed dropout immunity. The typical de-response time is approximately 90ms longer than the programmed dropout immunity. See section 1.6.20.3, P2.4

56 The device can decode in-band tones below the 400Hz lower limit but not necessarily within the selected bandwidth or with the selected threshold resolution. This can result in some CTCSS tones above approximately 160Hz being flagged in the Tone Status register as unrecognised in-band tones.
Some tones in the range 250Hz to 400Hz cannot be defined by the ‘in-band’ custom tones programming facility, but can be detected by selecting a valid close tone and using a suitably wide bandwidth setting.

| AC Parameters (cont.) | | | Notes | Min. | Typ. | Max. | Unit |
|---|---|---|---|---|---|---|---|
| **CTCSS Encoder** | | | | | | | |
| Frequency Range | | | | 60.0 | | 260 | Hz |
| Tone Frequency Accuracy | | | | | | ±0.3 | % |
| Tone Amplitude Tolerance | | | 61 | -1.0 | | +1.0 | dB |
| Total Harmonic Distortion | | | 62 | | 2.0 | 4.0 | % |
| **Selcall Encoder** | | | | | | | |
| Frequency Range | | | 65 | 400 | | 3000 | Hz |
| Tone Frequency Accuracy | | | | | | ±0.3 | % |
| Tone Amplitude Tolerance | | | 63 | -1.0 | | +1.0 | dB |
| Total Harmonic Distortion | | | 62 | | 2.0 | 4.0 | % |
| **DTMF Encoder** | | | | | | | |
| Output signal level | High tone | | | | 0 | | dB |
| | Low tone | (twist on) | 64 | | -2 | | dB |
| | | (twist off) | 64 | | 0 | | dB |
| Output distortion | | | | | 2 | 5 | % |
| **DCS Encoder** | | | | | | | |
| Bit Rate | | | | | 134.4 | | bits/s |
| Amplitude Tolerance | | | 61 | -1.0 | | +1.0 | dB |
| **FFSK/MSK Encoder** | | | | | | | |
| Output signal level | | | | | 775 | | mVrms |
| Output level variation | | | | -1.0 | | +1.0 | dB |
| Output distortion | | | | | | 5 | % |
| 3rd harmonic distortion | | | | | | 3 | % |
| Logic 1 freq | 1200baud and 2400baud | | | 1198 | 1200 | 1202 | Hz |
| Logic 0 freq | 1200baud | | | 1798 | 1800 | 1802 | Hz |
| | 2400baud | | | 2398 | 2400 | 2402 | Hz |
| Isochronous distortion (0 to 1 and 1 to 0) | | | | | | 40 | µs |

**Notes:**

61 $V_{DD}$(A) = 3.0V and TX Sub-Audio Level set to 88mV p-p (31mV rms).

62 Measured at MOD_1 or MOD_2 output.

63 $V_{DD}$(A) = 3.0V and Tx Audio Level set to 871mV p-p (308mV rms).

64 With respect to high tone level

65 'In-band tones between 400Hz and approximately 250Hz can be programmed, but the range is not contiguous and the transmitted tones may not be within the tone accuracy limits.

| AC Parameters (cont.) | Notes | Min. | Typ. | Max. | Unit |
|---|---|---|---|---|---|
| **Analogue Channel Audio Filtering** | | | | | |
| Pass-band (nominal bandwidth): | | | | | |
| Received voice | 71 | 300 | | 3000 | Hz |
| 12.5kHz channel transmitted voice | 72 | 300 | | 2550 | Hz |
| 25kHz channel transmitted voice | 73 | 300 | | 3000 | Hz |
| Pass-band Gain (at 1.0kHz) | | | 0 | | dB |
| Pass-band Ripple (wrt gain at 1.0kHz) | | -2 | | +0.5 | dB |
| Stop-band Attenuation | | 33.0 | | | dB |
| Residual Hum and Noise | 76 | | -50 | | dB |
| Pre-emphasis | 74 | | 6 | | dB/oct |
| De-emphasis | 75 | | –6 | | dB/oct |

**Notes:**

71 The receiver voice filter complies with the characteristic shown in Figure 5. The high pass filtering removes sub-audio components from the audio signal.

72 The 12.5kHz channel filter complies with the characteristic shown in Figure 9.

73 The 25kHz channel filter complies with the characteristic shown in Figure 8.

74 The pre-emphasis filter complies with the characteristic shown in Figure 10.

75 The de-emphasis filter complies with the characteristic shown in Figure 6.

76 Measured in a 30kHz bandwidth.

## C-BUS Timing

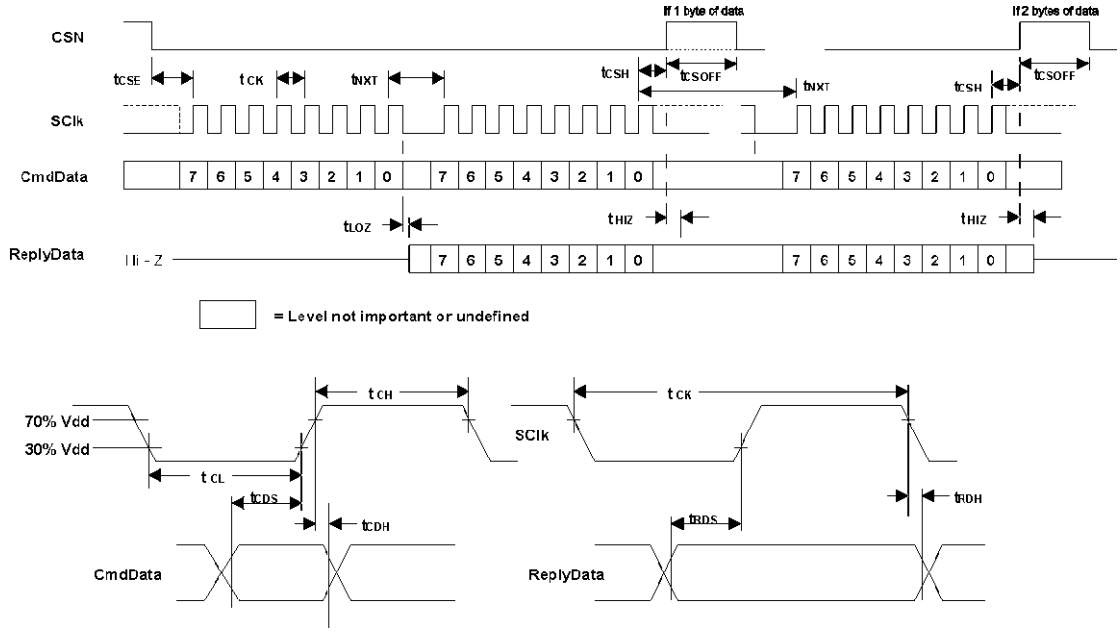


**Figure 14 C-BUS Timing**

| C-BUS Timing | | Notes | Min. | Typ. | Max. | Unit |
|---|---|---|---|---|---|---|
| $t_{CSE}$ | CSN Enable to SClk high time | | 100 | | | ns |
| $t_{CSH}$ | Last SClk high to CSN high time | | 100 | | | ns |
| $t_{LOZ}$ | SClk low to ReplyData Output Enable Time | | 0.0 | | | ns |
| $t_{HIZ}$ | CSN high to ReplyData high impedance | | | | 1.0 | µs |
| $t_{CSOFF}$ | CSN high time between transactions | | 1.0 | | | µs |
| $t_{NXT}$ | Inter-byte time | | 200 | | | ns |
| $t_{CK}$ | SClk cycle time | | 200 | | | ns |
| $t_{CH}$ | SClk high time | | 100 | | | ns |
| $t_{CL}$ | SClk low time | | 100 | | | ns |
| $t_{CDS}$ | Command Data setup time | | 75 | | | ns |
| $t_{CDH}$ | Command Data hold time | | 25 | | | ns |
| $t_{RDS}$ | Reply Data setup time | | 50 | | | ns |
| $t_{RDH}$ | Reply Data hold time | | 0 | | | ns |

**Notes:**
1. Depending on the command, 1 or 2 bytes of COMMAND DATA are transmitted to the peripheral MSB (Bit 7) first, LSB (Bit 0) last. REPLY DATA is read from the peripheral MSB (Bit 7) first, LSB (Bit 0) last.
2. Data is clocked into the peripheral on the rising SERIAL_CLOCK edge.
3. Commands are acted upon at the end of each command (rising edge of CSN).
4. To allow for differing µC serial interface formats C-BUS compatible ICs are able to work with SERIAL_CLOCK pulses starting and ending at either polarity.
5. Maximum 30pF load on IRQN pin and each C-BUS interface line.

These timings are for the latest version of C-BUS and allow faster transfers than the original C-BUS timing specification. The CMX881 can be used in conjunction with devices that comply with the slower timings, subject to system throughput constraints.

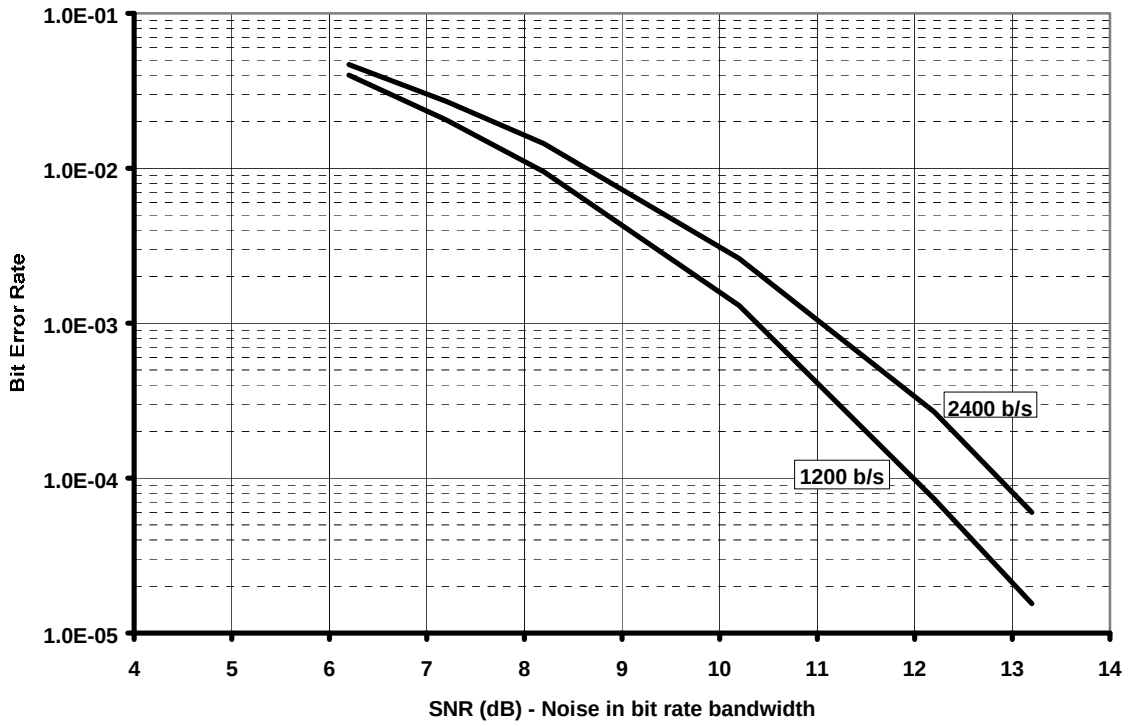


**Figure 15 Typical FFSK/MSK Bit Error Rate Graph**

### 1.8.2 Packaging

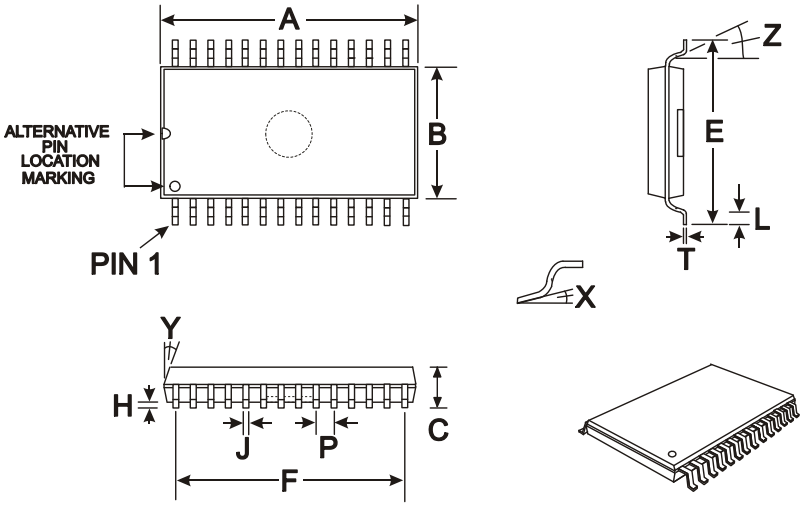


| | DIM. | MIN. | TYP. | MAX. |
|---|---|---|---|---|
| * | A | 9.90 | | 10.50 |
| * | B | 5.00 | | 5.60 |
| | C | 1.67 | | 2.00 |
| | E | 7.40 | | 8.20 |
| | F | | 8.45 | |
| | H | 0.05 | | 0.21 |
| | J | 0.22 | | 0.38 |
| | L | 0.55 | | 0.95 |
| | P | | 0.65 | |
| | T | 0.09 | | 0.25 |
| | X | 0° | | 8° |
| | Y | 7° | | 9° |
| | Z | 4° | | 12° |

NOTE :

* A & B are reference data and do not include mold deflash or protrusions.

All dimensions in mm
Angles are in degrees
Co-Planarity of leads within 0.1mm

**Figure 16 Mechanical Outline of 28-pin SSOP (D6): *Order as part no. CMX881D6***

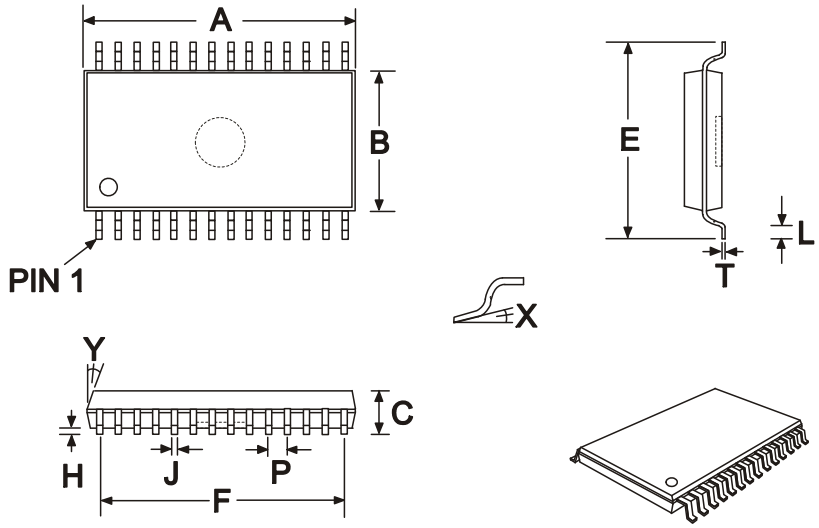


| | DIM. | MIN. | TYP. | MAX. |
|---|---|---|---|---|
| * | A | 9.60 | | 9.80 |
| * | B | 4.30 | | 4.50 |
| | C | -------- | | 1.20 |
| | E | 6.20 | | 6.60 |
| | F | | 8.45 | |
| | H | 0.05 | | 0.15 |
| | J | 0.17 | | 0.30 |
| | L | 0.45 | | 0.75 |
| | P | | 0.65 | |
| | T | 0.08 | | 0.20 |
| | X | 0° | | 8° |
| | Y | | 12° | |

NOTE :

* A & B are reference data and do not include mold deflash or protrusions.

All dimensions in mm
Angles are in degrees

**Figure 17 Mechanical Outline of 28-pin TSSOP (E1): *Order as part no. CMX881E1***

Handling precautions: This product includes input protection, however, precautions should be taken to prevent device damage from electro-static discharge. CML does not assume any responsibility for the use of any circuitry described. No IPR or circuit patent licences are implied. CML reserves the right at any time without notice to change the said circuitry and this product specification. CML has a policy of testing every product shipped using calibrated test equipment to ensure compliance with this product specification. Specific testing of all circuit parameters is not necessarily performed.


| CML Microcircuits (UK) Ltd<br>*COMMUNICATION SEMICONDUCTORS* | CML Microcircuits (USA) Inc.<br>*COMMUNICATION SEMICONDUCTORS* | CML Microcircuits (Singapore) Pte Ltd<br>*COMMUNICATION SEMICONDUCTORS* |
|---|---|---|
| **Tel:**<br>+44 (0)1621 875500<br>**Fax:**<br>+44 (0)1621 875600<br>**Sales:**<br>sales@cmlmicro.com<br><br>**Tech Support:**<br>techsupport@cmlmicro.com | **Tel:**<br>+1 336 744 5050<br>800 638 5577<br>**Fax:**<br>+1 336 744 5054<br>**Sales:**<br>us.sales@cmlmicro.com<br>**Tech Support:**<br>us.techsupport@cmlmicro.com | **Tel:**<br>+65 67450426<br>**Fax:**<br>+65 67452917<br>**Sales:**<br>sg.sales@cmlmicro.com<br>**Tech Support:**<br>sg.techsupport@cmlmicro.com |
| **- www.cmlmicro.com -** | | |