USB Audio Decoder LSI Series

AAC/WMA/MP3 +SD Memory Card + iPod

BU94601KV BU94603KV BU94604BKV

●Description

BU94601KV / BU94603KV / BU94604BKV are AAC+ WMA + MP3 decoder IC which contains USB host, SD card I/F, audio DAC, system controller, and regulator for internal CORE power supply.

●Features

- USB2.0 Full Speed host I/F function contained.
- Protocol conversion from I²C to USB HID or from USB HID to I²C. (Only BU94604BKV)
- SD card I/F function contained.
- I²C I/F function contained.
- FAT analysis function contained.
- MP3 decode function contained. (available for MPEG1, 2 and 2.5, Layer 1, 2 and 3)
- WMA decode function contained.
  (Except BU94601KV)
  Available for WMA9 standard and not available for DRM
- AAC decode function contained.
  (Except BU94601KV)
  Available for MPEG4 AAC-LC and not available for DRM
- Sample Rate Converter contained.
- System Controller contained.
- LED Controller contained.
- KEY matrix Controller contained.
- Stand Alone mode contained.
- External processor can control. (Slave mode)
- Audio DAC contained.
- Sound Effect function contained.
- Digital Audio Output(I²S, S/PDIF) function contained.
- File Name, Folder Name Sorting.
- ID3TAG and WMATAG and AACTAG Analysis.
- Reading a specified file data is possible from USB memory.
- LUN is selectable.
- Regulator for internal CORE power supply contained.
- VQFP64pin(0.5mm pitch)

●Applications

Audio products, etc

●Package

W(Typ.) x D(Typ.) x H(Max.)

VQFP64
12.00mm x 12.00mm x 1.60mm

●Line up

Part number	Format	iPod	Package		Ordering part number
BU94601KV	MP3	Not supported	VQFP64	Reel of 2000	BU94601KV-ZAE2
BU94603KV	AAC/WMA/MP3		VQFP64	Reel of 2000	BU94603KV-ZAE2
BU94604BKV	AAC/WMA/MP3	Supported	VQFP64	Reel of 2000	BU94604BKV-ZAE2

○Product structure : Silicon Monolithic integrated circuit ○Radiation resistance design is not arranged

© 2012 ROHM Co., Ltd. All rights reserved.

●**Basic circuit application diagram-part1**

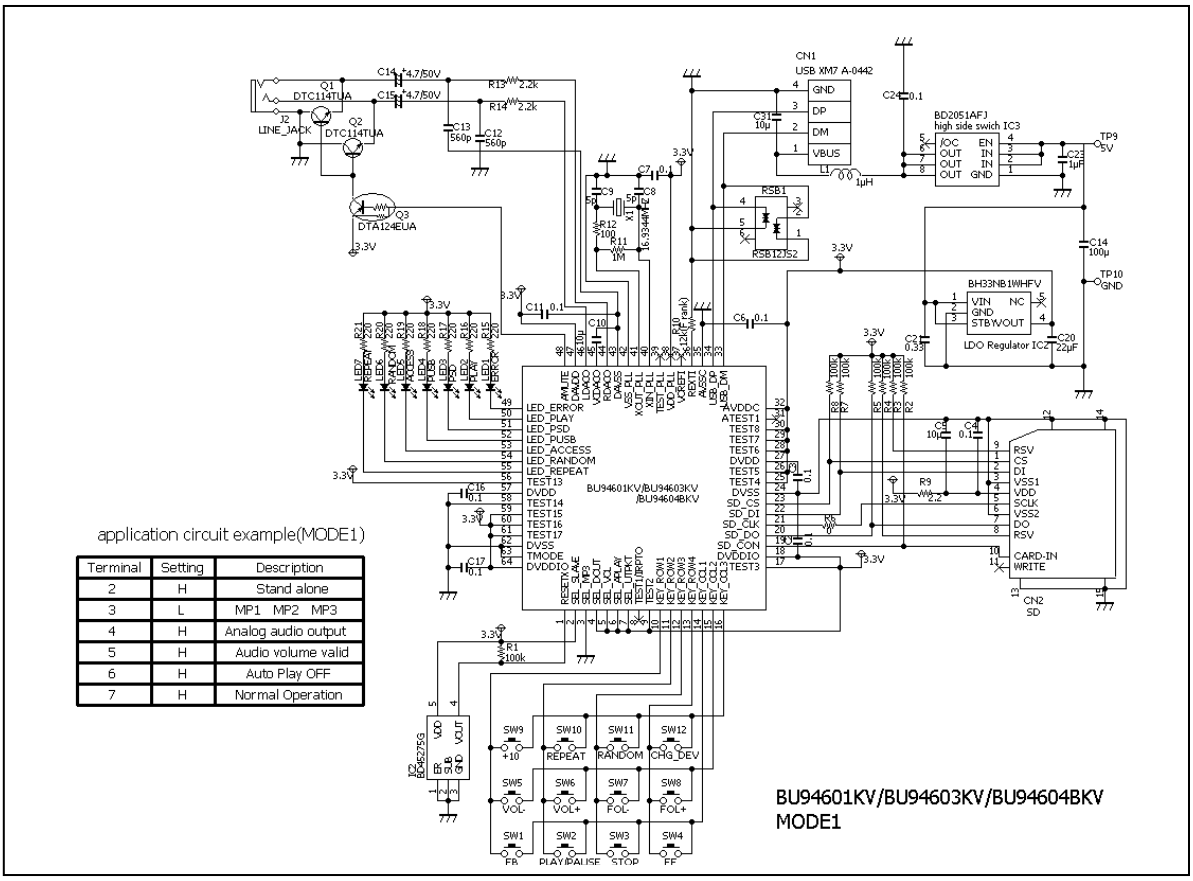

Terminal	Setting	Description
2	H	Stand alone
3	L	MP1 MP2 MP3
4	H	Analog audio output
5	H	Audio volume valid
6	H	Auto Play OFF
7	H	Normal Operation

Figure 1. an example of connection circuit application (BU94601KV/BU94603KV/BU94604BKV MODE1) *

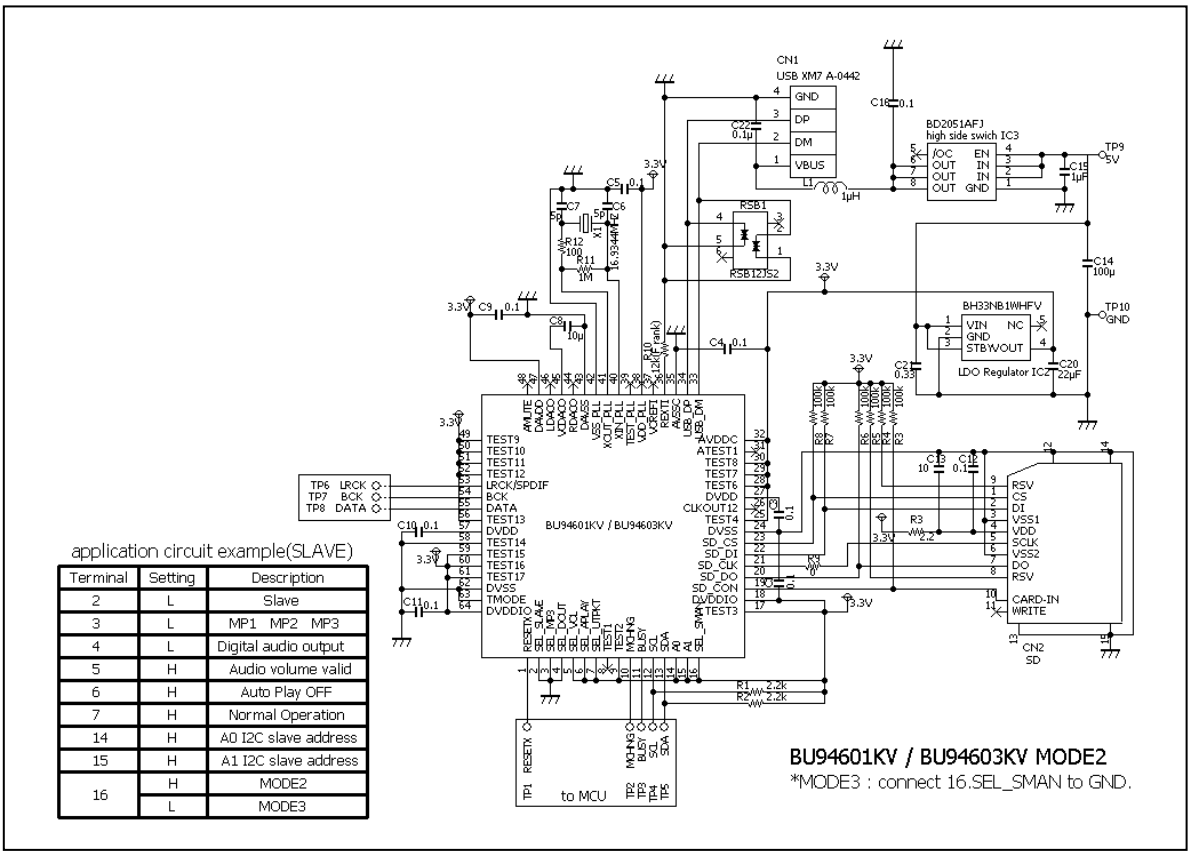

Terminal	Setting	Description
2	L	Slave
3	L	MP1 MP2 MP3
4	L	Digital audio output
5	H	Audio volume valid
6	H	Auto Play OFF
7	H	Normal Operation
14	H	A0 I2C slave address
15	H	A1 I2C slave address
16	H	MODE2
	L	MODE3

Figure 2. an example of connection circuit application (BU94601KV/BU94603KV MODE2/3) *

© 2012 ROHM Co., Ltd. All rights reserved.

●**Basic circuit application diagram-part2**

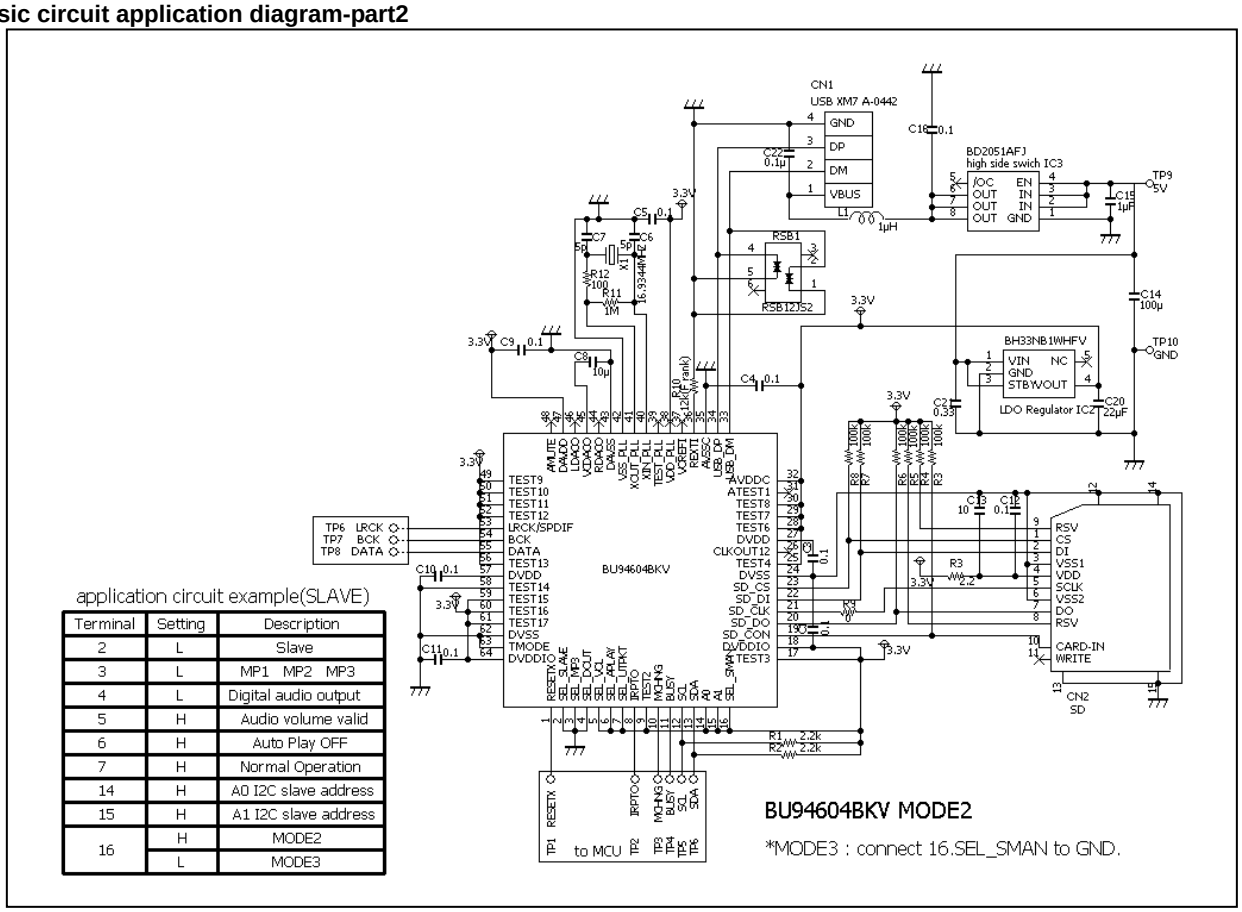

application circuit example(SLAVE)

Terminal	Setting	Description
2	L	Slave
3	L	MP1 MP2 MP3
4	L	Digital audio output
5	H	Audio volume valid
6	H	Auto Play OFF
7	H	Normal Operation
14	H	A0 I2C slave address
15	H	A1 I2C slave address
16	H	MODE2
	L	MODE3

Figure 3. an example of connection circuit application (BU94604BKV MODE2/3) *

This LSI has built in regulator for internal CORE power supply. DVDD terminal of 27PIN and 57PIN connect to bypass condenser. DVDD terminal of 27PIN and 57PIN don't connect to power supply.

The reference circuit and reference circuit parameters for crystal oscillator are shown above. The circuit parameters introduced above is not taking into consideration the environment in customer's systems or set's board. Therefore, ROHM is not guaranteed this content in any circuits. Please check the optimal circuit parameter in customer's actual systems or products with the oscillator manufacturer.

© 2012 ROHM Co., Ltd. All rights reserved.

●**Difference of BU94601KV/BU94603KV/BU94604BKV features**

Item	BU94601KV	BU94603KV	BU94604BKV
Package	VQFP64		
Number of pins	64pin		
Power supply	3.3V (inner 1.5V regulator)		
USB Host I/F	USB Full speed(12Mbps) USB mass storage class		
SD Card I/F	SPI mode SD, SDHC, MMC, mini-SDcard		
I^2C command I/F(Slave)	Supported		
Audio line output	Supported		
Digital audio output	I^2S SPDIF		
Sample rate converter	Supported		
clock	16.9344MHz		
Playable MP3 files	*.mp3,*.mp2,*.mp1		
Playable WMA files	Not supported	*.asf,*.wma	
Playable AAC files	Not supported	*.m4a,*.3gp,*.mp4	
iPod	Not supported		Supported*1

*1 For using of BU94604BKV, It is necessary to become a licensee of Apple Inc. regarding "Made for iPod/iPhone/iPad License".

© 2012 ROHM Co., Ltd. All rights reserved.

●**Block diagram**

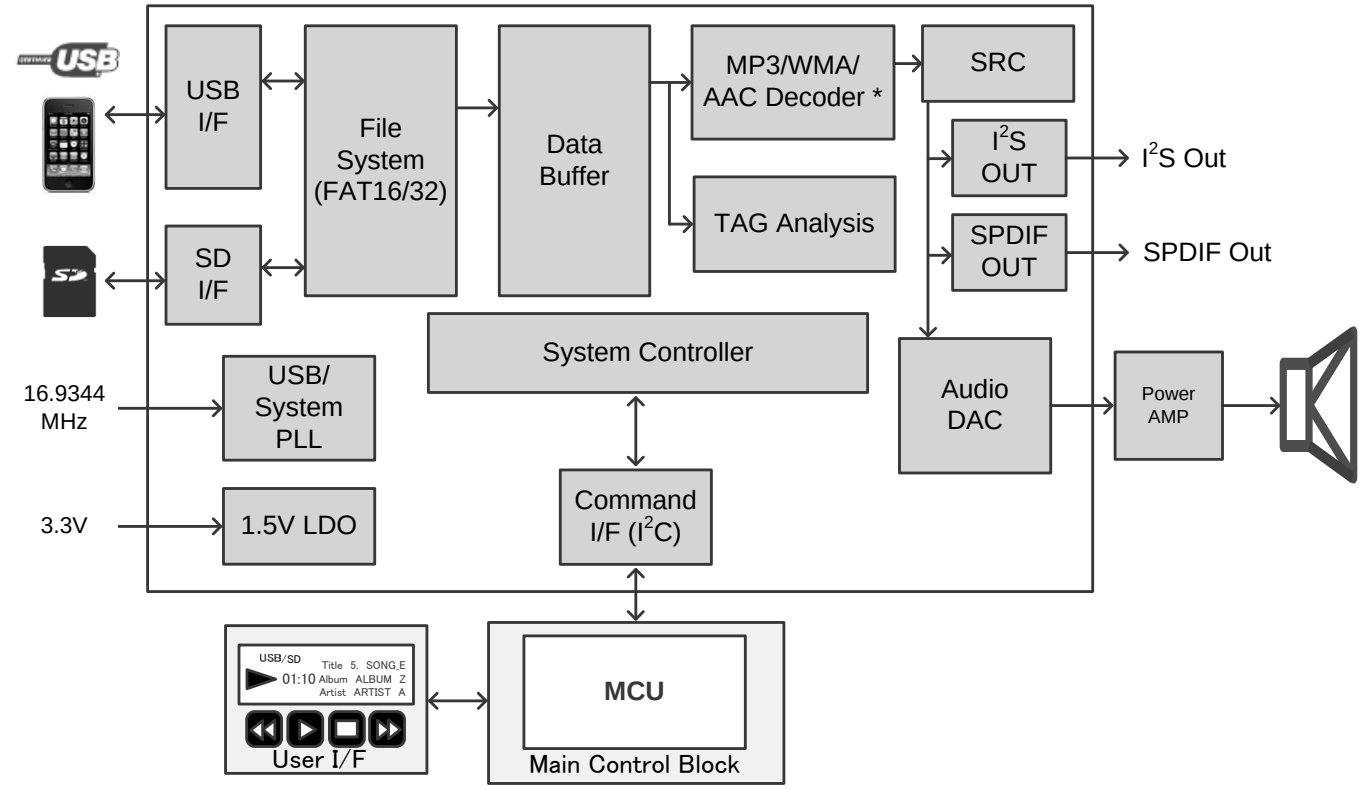

*BU94601KV contains only MP3 decoder

Figure 4. Block diagram

© 2012 ROHM Co., Ltd. All rights reserved.

●Arrangement of Terminals

BU94601KV / BU94603KV / BU94604BKV

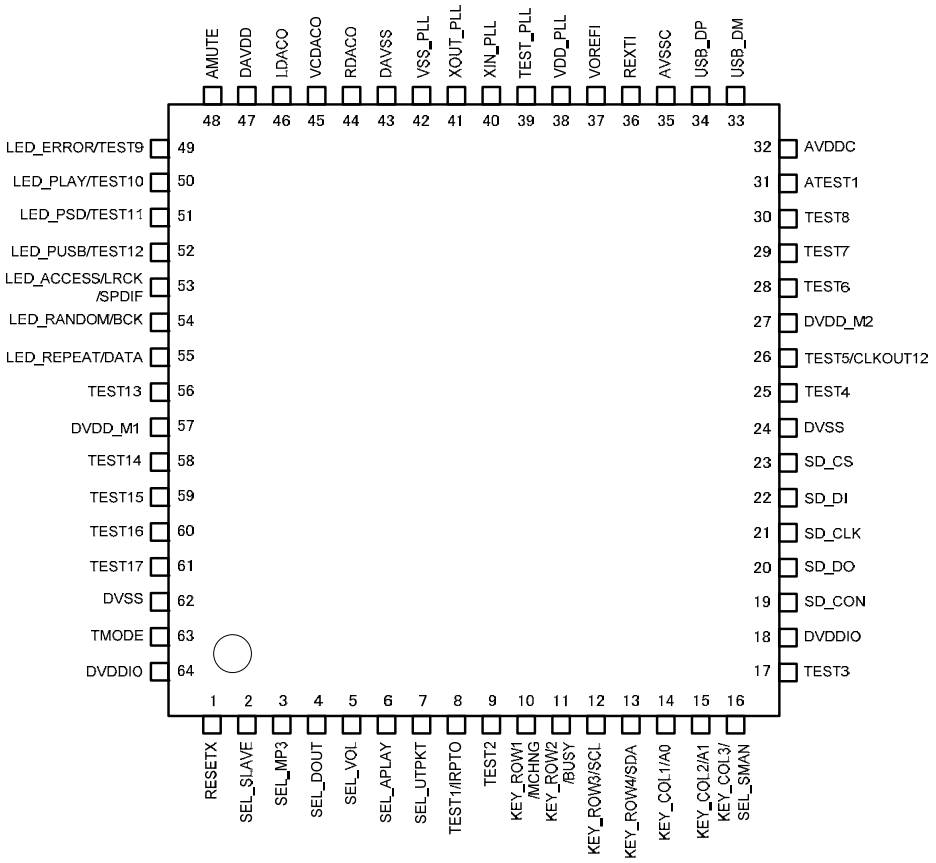

Figure 5. Arrangement of Terminals

© 2012 ROHM Co., Ltd. All rights reserved.

●**Description of Terminals**

	STAND ALONE MODE (MODE1)					SLAVE MODE (MODE2,MODE3)			
Pin No.	Signal Name	I/O Cir	I/O	Pull-Up/ Down (*7)	Function	Signal Name	I/O	Pull-Up/ Down (*7)	Function
1	RESETX	A	I	PU	H: Release RESET, L: RESET	←			
2	SEL_SLAVE	B	I	PU(*1)	H: STAND ALONE, L:SLAVE	←			
3	SEL_MP3	B	I	PU(*1)	H: PLAY MP3 ONLY, L: PLAY MP1,MP2 and MP3	←			
4	SEL_DOUT	B	I	PU(*1)	H: Audio Line Output, L: Digital Audio Output	←			
5	SEL_VOL	B	I	PU(*1)	H: Volume control valid, L: Volume control invalid	←			
6	SEL_APLAY	B	I	PU(*1)	H: Auto Play OFF , L: Auto Play	←			
7	SEL_UTPKT	B	I	PU(*1)	H: Normal Operation L: USB Test Packet Output	←			
8	TEST1 (*2)	B	O	-	OPEN (for TEST)	←			
	IRPTO (*3)	B	O	-	Device (Have 2 configuration or more) connection's interruption output terminal	←			
9	TEST2	-	I	PU	Pull-up to 3.3V system power supply (for TEST)	←			
10	KEY_ROW1	B	I	PU	KEY Input ROW1	MCHNG	O	-	Music change Output
11	KEY_ROW2	B	I	PU	KEY Input ROW2	BUSY	O	-	Command Operation Busy Flag
12	KEY_ROW3	B	I	PU	KEY Input ROW3	SCL	I	-	I^2C I/F Clock Input
13	KEY_ROW4	B	I	PU	KEY Input ROW4	SDA	I/O	-	I^2C I/F Data Input/Output
14	KEY_COL1	B	O	-	KEY Input COLUMN1	A0	I	-	I^2C I/F Slave Address Set0
15	KEY_COL2	B	O	-	KEY Input COLUMN2	A1	I	-	I^2C I/F Slave Address Set1
16	KEY_COL3	B	O	-	KEY Input COLUMN3	SEL_SMAN	I	PU(*1)	H: MODE2, L: MODE3
17	TEST3	B	I	PU	Pull-up to 3.3V system power supply (for TEST)	←			
18	DVDDIO	-	-	-	Connect to 3.3V System Power Supply	←			
19	SD_CON	B	I	-	SD I/F (*4)	←			
20	SD_DO	B	I	-	SD I/F (*4)	←			
21	SD_CLK	B	O	-	SD I/F	←			
22	SD_DI	B	O	-	SD I/F	←			
23	SD_CS	B	O	-	SD I/F	←			
24	DVSS	-	-	-	Connect to GND	←			
25	TEST4	-	I	PU	Pull-up to 3.3V system power supply (for TEST)	←			
26	TEST5	-	I	PU	Pull-up to 3.3V system power supply (for TEST)	CLKOUT12(*5)	I/O (*5)	PU(*5)	12MHz CLK Output.
27	DVDD_M2	-	-	-	Connect to 57PIN	←			
28	TEST6	-	I	-	Pull-up to 3.3V system power supply (for TEST)	←			
29	TEST7	-	I	-	Pull-up to 3.3V system power supply (for TEST)	←			
30	TEST8	-	I	-	Pull-up to 3.3V system power supply (for TEST)	←			
31	ATEST1	-	O	-	OPEN (for TEST)	←			
32	AVDDC	-	-	-	Connect to 3.3V System Power Supply	←			
33	USB_DM	C	I/O	-	USB DATA-	←			
34	USB_DP	C	I/O	-	USB DATA+	←			
35	AVSSC	-	-	-	Connect to GND	←			
36	REXTI	D	O	-	USB bias resistor(12kΩ) connecting terminal. Arrange the resistance of 12kΩ near PIN, and wiring on the PIN side doesn't cross with other signal lines.	←			

© 2012 ROHM Co., Ltd. All rights reserved.

37	VOREFI	-	O	-	OPEN (for TEST)	←			
38	VDD_PLL	-	-	-	Connect to 3.3V System Power Supply	←			
39	TEST_PLL	-	I	-	OPEN (for TEST)	←			
40	XIN_PLL	E	I	-	X'tal Input 16.9344MHz	←			
41	XOUT_PLL	E	O	-	Connect to X'tal 16.9344MHz	←			
42	VSS_PLL	-	-	-	Connect to GND	←			
43	DAVSS	-	-	-	Connect to GND	←			
44	RDACO	F	O	-	Audio DAC Line Output Rch	←			
45	VCDACO	I	O	-	Audio DAC Reference Voltage Output	←			
46	LDACO	F	O	-	Audio DAC Line Output Lch	←			
47	DAVDD	-	-	-	Connect to 3.3V System Power Supply	←			
48	AMUTE	G	O	-	Audio Mute Output (H:Mute Cancel, L:Mute)	←			
49	LED_ERROR	B	O	-	Error LED Output	TEST9	I	PU	Pull-up to 3.3V system power supply
50	LED_PLAY	B	O	-	Play LED Output	TEST10	I	PU	Pull-up to 3.3V system power supply
51	LED_PSD	B	O	-	Play SD Card LED Output	TEST11	I	PU	Pull-up to 3.3V system power supply
52	LED_PUSB	B	O	-	Play USB LED Output	TEST12	I	PU	Pull-up to 3.3V system power supply
53	LED_ACCESS	B	O	-	Memory Access LED Output	LRCK /SPDIF(*4)	I/O (*6)	PU(*6)	I^2S Output LR Clock / SPDIF Output
54	LED_RANDOM	B	O	-	Random Play LED Output	BCK(*4)	I/O (*6)	PU(*6)	I^2S Output Bit Clock
55	LED_REPEAT	B	O	-	Repeat Play LED Output	DATA(*4)	I/O (*6)	PU(*6)	I^2S Output LR DATA
56	TEST13	-	I	PU	Pull-up to 3.3V system power supply (for TEST)	←			
57	DVDD_M1	-	-	-	Connect to Bypass Condenser	←			
58	TEST14	F	I	-	Connect to GND	←			
59	TEST15	-	I	-	Pull-up to 3.3V system power supply (for TEST)	←			
60	TEST16	-	I	-	Pull-up to 3.3V system power supply (for TEST)	←			
61	TEST17	-	I	-	Pull-up to 3.3V system power supply (for TEST)	←			
62	DVSS	-	-	-	Connect to GND	←			
63	TMODE	H	I	-	Connect to GND	←			
64	DVDDIO	-	-	-	Connect to 3.3V System Power Supply	←			

*1 When L is input, Pull-UP turns OFF.
*2 BU94601KV / BU94603KV
*3 BU94604BKV
*4 When SD I/F is disused, pull-up to 3.3V system power supply.
*5 Enabled/Disabled can be selected using commands.
This pin becomes output and pull-up is OFF, only when 12MHz clock output is enable.
*6 In STAND ALONE MODE (MODE1),
When Audio Line output is selected (SEL_DOUT=H), LED output is enabled.
When the Digital Audio output is selected (SEL_DOUT=L), the I^2S format audio output is enabled.
In SLAVE MODE (MODE2, MODE3),
When the Analog Line output is selected (SEL_DOUT=H), these pins are TEST terminals.
When the Digital Audio output is selected (SEL_DOUT=L), I^2S or SPDIF is selectable.
See Chapter 4 . SEL_DOUT for further information.
*7 Input L level directly without resistance when you input L to the terminal with Pull-Up (about 33 kΩ).

© 2012 ROHM Co., Ltd. All rights reserved.

●Terminal equivalent circuit diagram

A	B	C	D
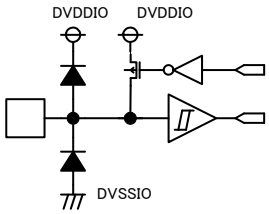	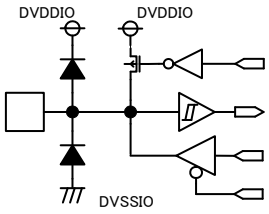	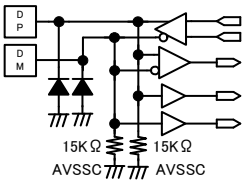	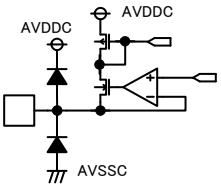
E	**F**	**G**	**H**
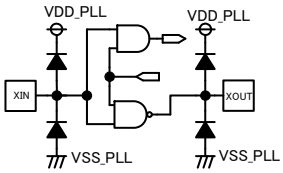	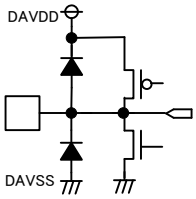	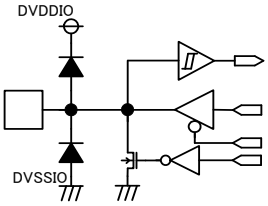	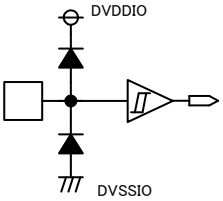
I			
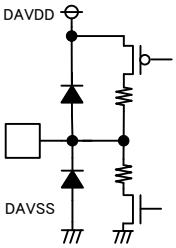			

© 2012 ROHM Co., Ltd. All rights reserved.

●Description of each block's movement-part1

- BU94601KV/BU94603KV/BU94604BKV are AAC+WMA+MP3 decoder IC in which a USB host I/F, SD memory card I/F, audio DAC and system control functions are built. Using a KEY or I²C interface command, the IC reads out a MP3 file written to a memory device having a USB I/F or a SD memory card. All the operations required before the data can be output to audio devices are incorporated into one chip. *BU94601KV supports only MP3.
- Supporting STAND ALONE MODE which is enabled by commands entered from the keyboard (hereinafter referred to as MODE1), AUTO SLAVE MODE which is enabled by commands entered from the master microcomputer, same as those entered from the keyboard, via the built-in I²C interface (hereinafter referred to as MODE2) and MANUAL SLAVE MODE which can send the memory device information to the master microcomputer via the I²C interface and completely control sequences such as a play sequence by the master microcomputer (hereinafter referred to as MODE3).
- I²C bus <-> USB protocol conversion function built into. *Only MODE2 and MODE3 of BU94604BKV.
- Supporting fast forward playing and fast backward playing with music.
- Supporting outputs folder names, file names, ID3TAG (V1.0, V1.1 V2.2 V2.3 and V2.4) information and WMA-TAG information and AAC-TAG(iTunes Meta-data) information via the I²C interface. This function is enabled only in MODE 2 and MODE 3.
- Supporting audio line output, digital audio output (I²S, SPDIF).
- Reading a specified file data is possible from USB memory. *Only a file that exists in root folder corresponds.

1. USB host I/F
   - Builds in the USB Full speed (12 Mbps) HOST control function.
   - Supports the USB mass storage class.
   - Convert the protocol from I²C from USB(HID) and USB(HID) to I²C when communicating with the master microcomputer.*
   - An isochronous IN transfer function to 192 byte/Frame is built into.*
   - Interrupt IN transfer function is built into.*
   - It doesn't correspond to external HUB.

   * Only the device with two CONFIGURATIONS or more. Only BU94604BKV.

2. SD card I/F
   - Supports the SPI mode.
   - Supports the MMC and mini-SD cards.
   - Supports the SDHC cards.
   - Supports the SD ver1.01 (file system).
   - Does not support CPRM.

3. I²C I/F
   - Communicates with the master microcomputer using an I²C interface format.
   - Supports the standard mode (100 kbps) and fast mode (400 kbps).
   - Supports a 7-bit address.
   - Can select four types of slave addresses.

4. Audio output
   - 1bit-DAC output
   - Builds in the digital soft mute function.
   - Supports digital audio output (I²S, SPDIF).
   - Builds in sound effects of POPS, JAZZ, ROCK, CLASSIC, R&B and BassBoost.*

   * Only audio line output is enabled.

© 2012 ROHM Co., Ltd. All rights reserved.

●Description of each block's movement-part2

5. FAT analysis
   - Supports FAT16 and FAT 32.
   - Supports VFAT (long file name).
   - Supports multi-partition up to 1.
   - The maximum number of playable folders within each folder is 65534.
   - The maximum number of playable files within each folder is 65534.
   - The maximum number of playable folders within each device is 65534.
   - The playable folder hierarchy is up to 8 layers containing the root directory.
   - The playable file extension supports *.m4a, *.3gp, and *.mp4 for AAC, *.wma and *.asf for WMA, *.mp3, *.mp2, and *.mp1 for MP3. For *.mp2 and *.mp1, play enabled/disabled can be selected. Upper case letters and lower case letters are not distinguished in the file extension. (BU94601KV supports only *.mp3, *.mp2, and *.mp1.)
   - Sorts and plays up to 100 folders and 100 files in the order of UNICODE.
   - Possible to obtain up to 64 bytes as the folder name or file name.
   - Supports 1 sector of 512, 1024, 2048 and 4096 bytes.
   - Playable file size is up to 2Gbyte-1 byte. Although a file over 2Gbyte is recognized as a playable file, 2Gbyte -1byte part of the file is playable.

6. MP3 decoder
   - Supports MPEG audio 1, 2 and 2.5.
   - Supports Layer 1, 2 and 3.
   - Supports sample rates 8k, 16k, 32k, 11.025k, 22.05k, 44.1k, 12k, 24k and 48kHz.
   - Supports bit rate 8 to 320 kbps and VBR (Variable Bit Rate). *Except free format.
   - Supports ID3TAG V1.0, V1.1, V2.2, V2.3 and V2.4.
     (Up to 64 bytes can be obtained for the names of album, artist, and title.)

7. WMA decoder (BU94601KV doesn't support.)
   - Supports Windows Media Audio 9 standard.
   - Not supports DRM.
   - Supports sample rates 8k, 16k, 32k, 11.025k, 22.05k, 44.1k, and 48kHz.
   - Supports bit rate 5 to 384 kbps and VBR (Variable Bit Rate). *Except free format.
   - Supports WMA-TAG.
     (Up to 64 bytes can be obtained for the names of album, artist, and title.)

8. AAC decoder (BU94601KV doesn't support.)
   - Supports MPEG4 AAC-LC encoded by iTunes.
   - Not supports DRM.
   - Supports sample rates 8k, 16k, 32k, 11.025k, 22.05k, 44.1k, 12k, 24k and 48kHz.
   - Supports bit rate 8 to 320 kbps and VBR (Variable Bit Rate).
   - Supports AAC-TAG(iTunes Meta-data).
     (Up to 64 bytes can be obtained for the names of album, artist, and title.)
   - The playable file extension supports *.m4a, *.3gp, and *.mp4
   - Based on 3GPP TS 26.244.
   - Supports file type of m4a, mp42, and 3gpX (numbers with arbitrary X).

   *About except for the file encoded by iTunes, when the stream of a gap or video data is included in the file, it may skip to the following music or skipping may be carried out.

9. Sample rate converter
   - Converts all the supported sample rates to 44.1 kHz using a poly-phase operation.

10. System controller
    - Controls all the system operations including KEY input, LED output, interface control with the master microcomputer, USB device access, SD card access, FAT analysis, sort function, MP3 decode, WMA decode and audio output.

© 2012 ROHM Co., Ltd. All rights reserved.

●Description of each block's movement-part3

11. KEY matrix controller
- Controls 12 types of KEY inputs: play/pause, stop, tune forward/fast forward playing, tune backward/fast backward playing, folder forward, folder backward, 10-tune forward, volume up, volume down, repeat play, random play and device selection.

12. LED controller
- Controls 7 types of LED outputs: play/pause, error, memory accessing, random playing, repeat playing, USB selection and SD selection

13. Control from the master microcomputer
- Control from the master microcomputer is enabled using the I^2C interface.
- Through the command operations, the following can be controlled: play, pause, stop, tune forward, tune backward, fast forward playing, fast backward playing, folder forward, folder backward, 10-tune forward, 10-tune backward, volume up, volume down, device selection, volume setting, repeat selection, random play, digital audio output setting, sound effect setting, resume data setting and direct tune selection data setting.
- Controls the following: playing status output, pause, stop, searching, error, folder number, file number within folder, play time information, number of total folders, number of total files, name of folder being played, name of file being played, ID3TAG (title, artist and album) , WMATAG (title, artist and album), AACTAG (title, artist and album),resume data and direct tune selection data (MODE3).

14. Function selection
- Selects MODE1 or MODE2/3 (SEL_SLAVE=H: MODE1, L: MODE2/3).
- Selects MPEG Audio Layer (SEL_MP3=H: play MP3 only, L: play MP1/MP2/MP3)
- Digital audio output selection (SEL_DOUT=H: output OFF, L: output ON)
- Sound volume operation selection (SEL_VOL=H: volume adjustable, L: volume not adjustable MAX output)
- Selects operation at power ON to check device (SEL_APLAY=H: stop, L: play). *Enabled in MODE 1 only.
- Selects MODE2 or MODE3 (SEL_SMAN=H: MODE2, L: MODE3). *Enabled in MODE 2/3 only.

15. File Read function in USB memory
- The specified data of file that exists in the root folder of the USB memory reading is possible.

* The file name corresponds only by 8.3 forms. (The wild-card cannot be used.)

© 2012 ROHM Co., Ltd. All rights reserved.

●Absolute maximum ratings (Ta = 25℃)

Parameter	Symbol	Limits	Unit	Comment
Supply voltage(Analog, I/O)	VDD1MAX	-0.3 to 4.5	V	DVDDIO, VDD_PLL, DAVDD, AVDDC
Input voltage	VIN	-0.3 to VDD1 + 0.3	V	
Storage temperature range	TSTG	-55 to 125	℃	
Operating temperature range	TOPR	-40 to 85	℃	
Power dissipation *1	PD	750	mW	

*1：In the case of use at Ta=25℃ or more, 7.5mW should be reduced per 1℃.
Radiation resistance design is not arranged.

●Operating conditions (Ta = 25℃)

Parameter	Symbol	Limits	Unit	Comment
Supply voltage(Analog, I/O)	VDD1	3.0 to 3.6	V	DVDDIO,VDD_PLL, DAVDD, AVDDC

●Electrical characteristics

(Unless specified, Ta=25℃,VDD1=3.3V, DVSS=AVSSC=VSS_PLL=DAVSS=0V, XIN_PLL=16.9344MHz)

Parameter	Symbol	Limits			Unit	Condition
		MIN.	TYP.	MAX.		
<Total >						
Circuit current (VDD1 USB1)	IDD1USB1	-	65	80	mA	*1 When USB memory is played.
Circuit current (VDD1 SD1)	IDD1SD1	-	35	50	mA	*1 When SD card is played.
<Digital block>						
H-Level input voltage	VIH	VDD1*0.7	—	VDD1	V	*3
L-Level input voltage	VIL	DVSS	—	VDD1*0.3	V	*3
H-Level output voltage1	VOH1	VDD1-0.4	—	VDD1	V	IOH=-1.6mA, *4
L-Level output voltage1	VOL1	0	—	0.4	V	IOL=1.6mA. *4
H-Level output voltage2	VOH2	VDD1-0.4	—	VDD1	V	IOH=-3.6mA, *5
L-Level output voltage2	VOL2	0	—	0.4	V	IOL=3.6mA, *5
H-Level output voltage3	VOH3	VDD1-0.4	—	VDD1	V	IOH=-0.6mA, *6
L-Level output voltage3	VOL3	0	—	0.4	V	IOL=0.6mA, *6
H-Level output voltage4	VOH4	VDD1-1.0	—	VDD1	V	IOH=-0.6mA, *7
L-Level output voltage4	VOL4	0	—	1.0	V	IOL=0.6mA, *7
<USB-HOST >						
H-Level input voltage	VIHUSB	VDD1*0.6	—	VDD1	V	*8
L-Level input voltage	VILUSB	AVSSC	—	VDD1*0.3	V	*8
Output impedance(H)	ZOH	22.0	45.0	60.0	Ω	*8
Output impedance(L)	ZOL	22.0	45.0	60.0	Ω	*8
H-Level output voltage	VOHUSB	VDD1-0.5	—	VDD1	V	*8
L-Level output voltage	VOLUSB	0	—	0.3	V	*8
Rise/Fall time	Tr/Tf	—	11	—	ns	*8, Output capacity 50pF
Voltage of crossing point	VCRS	—	VDD1/2	—	V	*8, Output capacity 50pF
Range of differential input	VDIFF	0.8	—	2.5	V	*8
Differential input sensitivity	VSENS	0.2	—	—	V	*8
Pull-down resistance	RPD	14.25	15.0	24.8	kΩ	*8
<Audio DAC>						
Distortion rate	THD	—	0.02	—	%	1kHz, 0dB, sine, *9
Dynamic range	DR	—	88	—	dB	1kHz, -60dB, sine, *9
S/N ratio	S/N	—	96	—	dB	*9
Max output level	VSMAX	—	0.92	—	Vrms	1kHz, 0dB, sine, no load, *9

*1 3.3V system I/O, Analog Power supply(VDD1), 1kHz, 0dB, sine-wave playing
*3 1-7, 9-17, 19-20, 25-26, 28-30, 40, 49-52, 56, 58-61, 63 pin
*4 8, 10-11, 14-16, 48-55 pin
*5 13 pin
*6 21-23, 26 pin
*7 41 pin
*8 33, 34 pin
*9 44, 46 pin

© 2012 ROHM Co., Ltd. All rights reserved.

●Application Information

1. Clock and reset

Clock

Signal name	I/O	Function	Remarks
XIN_PLL	I	X'tal (16.9344 MHz) connection input terminal	
XOUT_PLL	O	X'tal (16.9344 MHz) connection terminal	

Reset

Signal name	I/O	Function	Remarks
RESETX	I	System reset input terminal	

To disable a reset signal, continue L input for more than 5 us after all of the supply voltage reach the specified value and clock input from the oscillation I/O terminal becomes stable. (See Figure 6.)

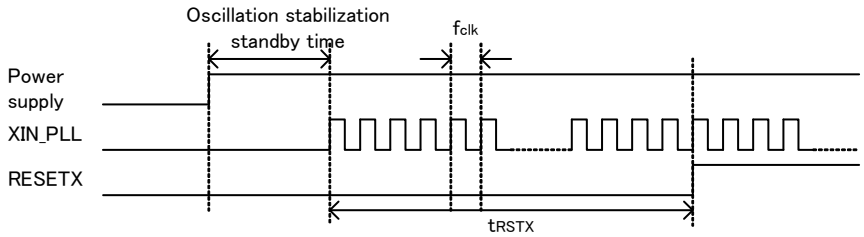

Figure 6 Reset Timing

Item	Symbol	Specification			Unit	Remarks
		min	typ	max		
Clock frequency	f_{CLK}	16.9302	16.9344	16.9386	MHz	
Reset L interval	t_{RSTX}	5	-	-	us	

2. SEL_SLAVE

MODE1/MODE2, 3 selection input signal

Signal name	I/O	Function	Remarks
SEL_SLAVE	I	Selects MODE1 or MODE2, 3.	H: MODE1, L: MODE2, 3

SEL_SLAVE selects MODE1 (STAND ALONE MODE) or MODE 2/3 (SLAVE MODE).
By selecting SEL_SLAVE, SLAVE mode terminal setting is enabled.
SEL_SLAVE is set only at power ON. Note that change of selection after power ON is ignored.

3. SEL_MP3

MPEG Audio Layer 1, 2, 3 play selection signal

Signal name	I/O	Function	Remarks
SEL_MP3	I	MPEG Audio Layer selection	H: Can play MP3 only.L: Can play MP1, MP2 and MP3.

SEL_MP3 allows you to select the layer of the MPEG audio to be played. When enabling all the files having mp1, mp2 or mp3 as the file extension to be played, enter L. When enabling mp3 only, enter H.
SEL_MP3 is set only at power ON. Note that change of election after power ON is ignored.

© 2012 ROHM Co., Ltd. All rights reserved.

4. SEL_DOUT

Audio output selection signal

Signal name	I/O	Function	Remarks
SEL_DOUT	I	Audio output selection	H: Line output, L: Digital output(I^2S, SPDIF)

This SEL_DOUT selects audio output signal.

Table 1. “Audio output” shows the audio outputs for each MODE.

Also table 2. ”I^2S_fs” shows the I^2S output formats for each MODE.

For command, see Chapter VII

"TEST terminal" needs to be pull-up to 3.3V power supply.

Table 1. Audio output

Pin No.	MODE1						MODE2,3								
	SEL_DOUT=H			SEL_DOUT=L			SEL_DOUT=H			SEL_DOUT=L					
										I2S			SPDIF ON		
	function	I/O	PU	function	I/O	PU	function	I/O	PU	function	I/O	PU	function	I/O	PU
44	Line Out Rch	O	OFF	HiZ	O	OFF	Line Out Rch	O	OFF	HiZ	O	OFF	HiZ	O	OFF
46	Line Out Lch	O	OFF	HiZ	O	OFF	Line Out Lch	O	OFF	HiZ	O	OFF	HiZ	O	OFF
53	LED_ACCESS	O	OFF	I2S LR CLOCK	O	OFF	TEST terminal	I	ON	I2S LR CLOCK	O	OFF	SPDIF	O	OFF
54	LED_RANDOM	O	OFF	I2S BIT CLOCK	O	OFF	TEST terminal	I	ON	I2S BIT CLOCK	O	OFF	TEST terminal	I	OFF
55	LED_REPEAT	O	OFF	I2S LRDATA	O	OFF	TEST terminal	I	ON	I2S LRDATA	O	OFF	TEST terminal	I	OFF

*PU・・・Pull-Up

Table 2. I^2S_fs

MODE1	32fs
MODE2/3	Can select 32fs, 48fs, 64fs by command.

SEL_DOUT is set only at power ON. Note that change of selection after power ON is ignored.

5. SEL_VOL

Sound volume operation selection signal

Signal name	I/O	Function	Remarks
SEL_VOL	I	Sound volume operation	H: Sound volume operation enabled, L: Sound volume operation disabled

SEL_VOL selects whether sound volume operation is to be enabled or disabled.

Sound volume operation is enabled when SEL_VOL=H.

Initial value of audio output is -24.1dB at power ON.

Sound volume operation is disabled when SEL_VOL=L. Audio output is fixed to 0dB.

Figure 7 shows the relationship between audio output and sound volume step.

SEL_VOL is set only at power ON. Note that change of selection after power ON is ignored.

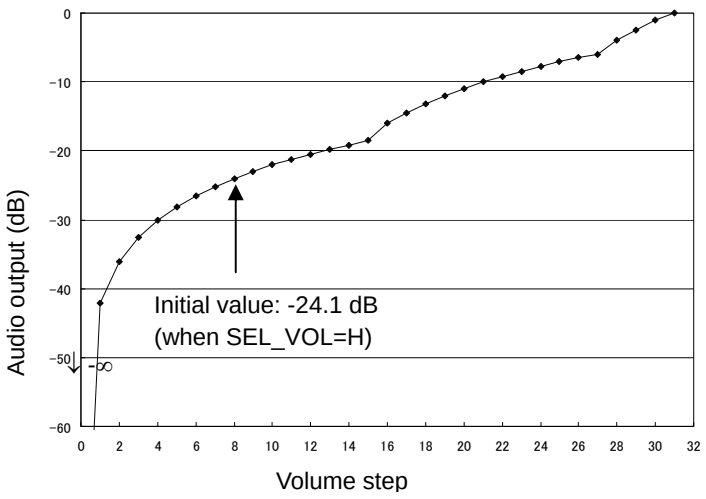

Figure 7 Volume Step Function

© 2012 ROHM Co., Ltd. All rights reserved.

6. SEL_APLAY

Auto play selection signal at power ON/device recognition

Signal name	I/O	Function	Remarks
SEL_APLAY	I	Auto play selection signal at device recognition	H: Stop after recognizing device, L: Play after recognizing device

SEL_APLAY selects whether the audio data in the memory is to be automatically played when a memory device (USB memory or SD card) is inserted at power ON or when the system recognizes the memory device inserted. SEL_APLAY can be selected only in MODE1. Since selection of SEL_APLAY is ignored in MODE2/3, select it from Pull-up. When MODE2/3 is selected, audio data is halted after the system recognizes a device.

7. SEL_UTPKT

USB test packet

Signal name	I/O	Function	Remarks
SEL_UTPKT	I	USB test packet send	H: Disabled, L: USB test packet send

A test packet signal is output from USB_DP terminal or USB_DM terminal when L is set to SEL_UTPKT at power ON.
Once enabled, SEL_UTPK keeps that state regardless of operation modes and sends out a test packet.
A test packet signal is continuously output until power turns OFF. Use SEL_UTPKT when evaluating the USB terminal. In other cases, use it from Pull-up.

8. Audio line output

Audio line output

Signal name	I/O	Function	Remarks
LDACO	O	Lch audio line output	-
RDACO	O	Rch audio line output	-

These signals are decoded MP3 music audio data line outputs.
They turn ON when the line output is selected by SEL_DOUT terminal.
Sample rate converter converts the sample rate 48kHz and 32kHz to 44.1kHz and outputted.

9. MUTE control output

Audio MUTE

Signal name	I/O	Function	Remarks
AMUTE	O	Audio mute control terminal	H: At audio output, L: At mute

This terminal outputs H at audio output and L at mute.
This signal can be used as flag for external amplifier when mute audio output at power ON or FF/FB (silence).
Figure 8 shows the operation waveform.

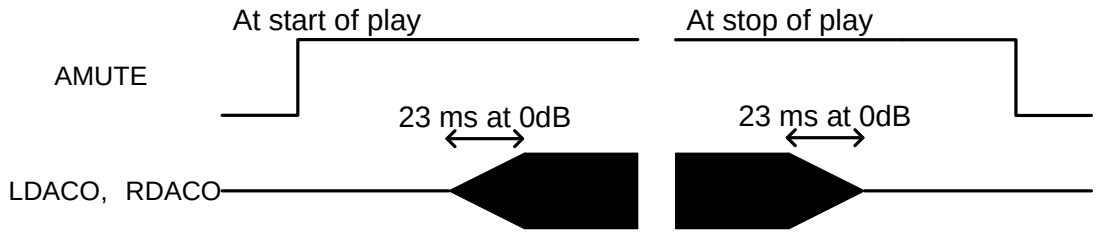

Figure 8 Waveform at Audio Mute

© 2012 ROHM Co., Ltd. All rights reserved.

10. KEY input format

3x4 matrix command input

Signal name	I/O	Function	Remarks
KEY_ROW1	I	KEY matrix I/O signal	-
KEY_ROW2	I		-
KEY_ROW3	I		-
KEY_ROW4	I		-
KEY_COL1	O		-
KEY_COL2	O		-
KEY_COL3	O		-

Configure a circuit for the matrix signals terminals for KEY commands as shown in the applied circuit diagram figure 9.

The operation corresponding to the key pressed over the circuit is performed.

Details of each operation are explained in Chapter 21.

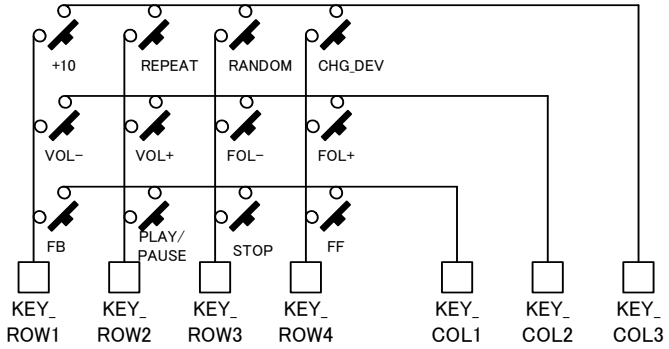

Figure 9 KEY Matrix Applied Circuit Diagram

11. I²C interface format

I²C serial interface

Signal name	I/O	Function	Remarks
SCL	I	I²C interface clock input	-
SDA	I/O	I²C interface data I/O	-
A0	I	Slave address selection terminal	Slave address [0] bit setting terminal
A1	I	Slave address selection terminal	Slave address [1] bit setting terminal

This is an I²C serial interface terminal. By inputting L to SEL_SLAVE terminal, the interface terminal becomes enabled.

The terminal supports slave I²C operation.

11.1 I²C protocol

When I²C bus is in IDLE, SDA and SCL are set to H by the external Pull-up resistance. When starting communications, the master sets SDA to L while SCL is set to H (Start condition). When ending communications, the master sets SDA to H while SCL is set to H (Stop condition). During transfer, SDA is changed only when SCL is set to L. Figure 10 shows Start condition, Stop condition of I²C.

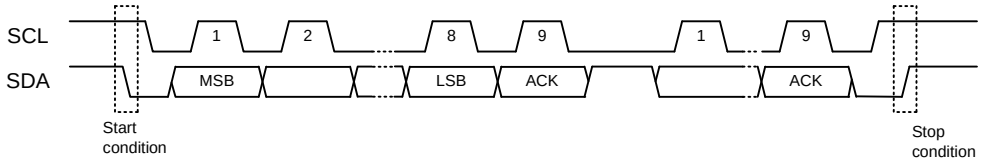

Figure 10 I²C start, stop condition

© 2012 ROHM Co., Ltd. All rights reserved.

11.2 Slave address

An I²C bus slave address corresponds to the 7-bit addressing mode. As shown in Table 3., you can select the slave address using input of A0 terminal and A1 terminal. Figure 11 shows the slave address transfer format.

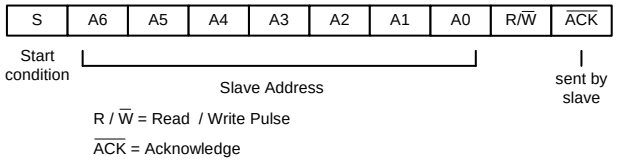

Figure 11 Slave Address Transfer Format

Table 3. Settable Slave Addresses

MSB A6	A5	A4	A3	A2	A1 terminal	LSB A0 terminal
1	0	0	0	0	0	0
1	0	0	0	0	0	1
1	0	0	0	0	1	0
1	0	0	0	0	1	1

11.3 Write protocol from master

To send a master command using an I²C bus, follow the transfer protocol shown in Figure 12. For details on each command, see Chapter of “Command operation”.

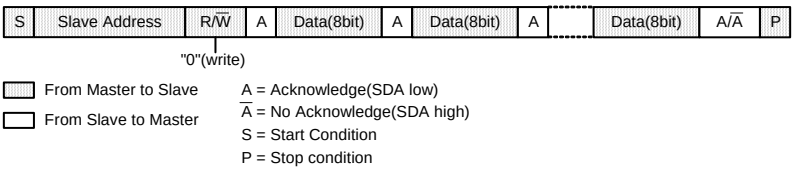

Figure 12 Command send protocol

11.4 Read protocol to master

To send reception data using an I²C bus from the slave to the master, follow the transfer protocol shown in Figure 13. First, transfer the status read command (step1). Then, input SCL clock of required bytes in step 2 to read the status.

When the device is BUSY at reception of device status or memory data, the I²C bus may possibly be occupied by the device during BUSY. This LSI transfers the bus to the master so as not to generate such bus occupation. However, as a BUSY state still exists inside of the system, appropriate data may not be transferred during BUSY. Therefore, the first byte of transfer data (Step2) is used to judge the transfer data is enabled/disabled. When specifying addresses from the master to the slave and the first byte of the transfer data immediately after data transfer is required is 0x00, transfer data from the slave is enabled. If the first byte is 0xFF, it shows the BUSY state. Therefore, the transfer data should be disabled. If this happens, retry command transfer at Step 1 to read out the status.

Figure 14 shows the relationship between the transfer data and BUSY.

* For further information on BUSY, see Chapter 17.

© 2012 ROHM Co., Ltd. All rights reserved.

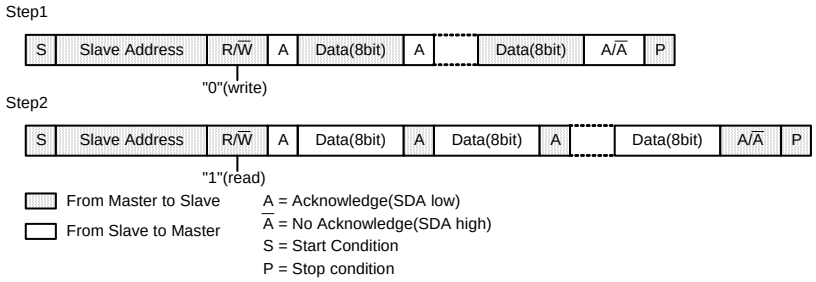

Figure 13 Status Reception Protocol

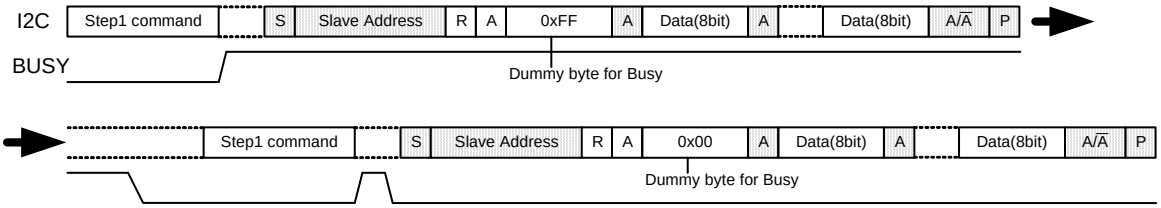

Figure 14 Relationship between Transfer Data and BUSY

11.5 I²C Bus line electrical specification and timing

SDA and SCL bus-line characteristic (Unless specified, Ta=25℃, VDD1=3.3V)

	Parameter	Code	Min.	Max.	Unit
1	SDA, SCL H input voltage	VIH	VDD*0.7	VDD	V
2	SDA, SCL L input voltage	VIL	DVSS	VDD*0.3	V
3	SDA H output voltage	VOH	VDD-0.4	VDD	V
4	SDA L output voltage	VOL	0	0.4	V
5	SCL clock frequency	fSCL	0	400	kHz
6	Bus-free-time between "Stop" condition and "Start" condition	tBUF	1.3	–	us
7	Hold time for "Start" condition After this, the first clock pulse is generated.	tHD;STA	0.6	–	us
8	LOW status hold-time of SCL clock	tLOW	1.3	–	us
9	HIGH status hold-time of SCL clock	tHIGH	0.6	–	us
10	Data-hold-time	tHD;DAT	0*	–	us
11	Date-setup-time	tSU;DAT	100	–	ns
12	Rising time of SDA and SCL signal	tR	20+0.1*Cb	300	ns
13	Fall time of SDA and SCL signal	tF	20+0.1*Cb	300	ns
14	Setup time of "Stop" condition	tSU;STO	0.6	–	us
15	Capacitive load of each bus-line	Cb	–	400	pF

The above-mentioned numerical values are all the values corresponding to $V_{IH\ min}$ and $V_{IL\ max}$ level.

*To exceed an undefined area on falling edged of SCL, transmission device should internally offer the hold-time of 300ns or more for SDA signal ($V_{IH\ min}$ of SCL signal).

Because the "Repeated Start" condition to send "Start" condition without sending "Stop" condition doesn't correspond, after sending "Start" condition, always send "Stop" condition.

Neither terminal SCL nor terminal SDA correspond to 5V tolerant.

© 2012 ROHM Co., Ltd. All rights reserved.

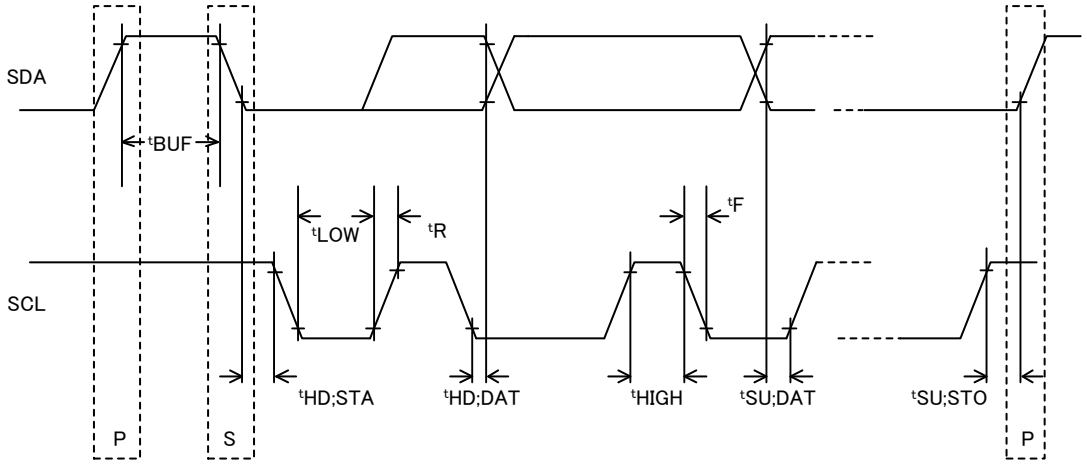

Figure 15 Timing chart

12. I²S format

I²S format

Signal name	I/O	Function	Remarks
LRCK	O	I²S Bit clock output (fs=44.1kHz)	-
BCK	O	I²S Bit clock output	-
DATA	O	I²S data output	-

This is digital audio interface terminal. By inputting L to SEL_DOUT terminal, the interface terminal becomes enabled. When selecting the I²S digital audio output, the output format varies depending on MODE. MODE2 allows you to select 32fs, 48fs or 64fs. *See Chapter 4.

Figures 16, 17 and 18 show the I²S format to be output.

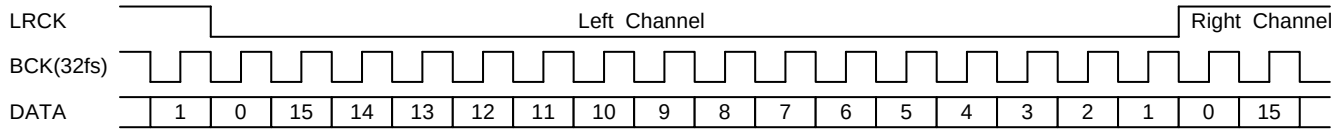

Figure 16 I²S Output Timing (32fs)

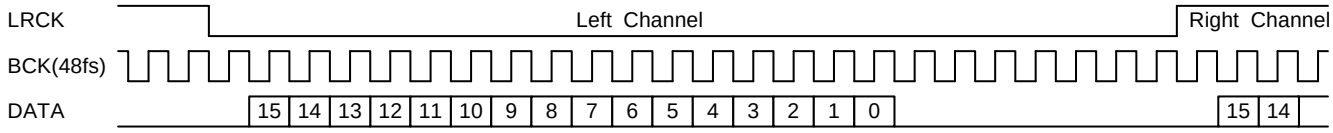

Figure 17 I²S Output Timing (48fs)

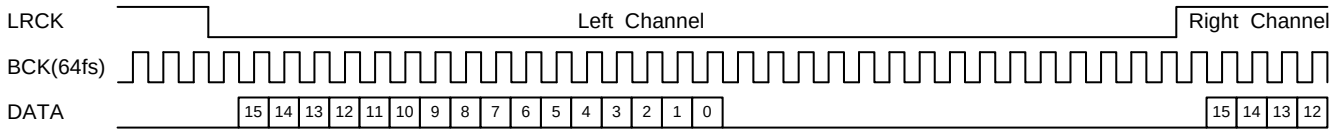

Figure 18 I²S Output Timing (64fs)

12.1 I²S Timing

48fs I²S format (Unless specified, Ta=25℃, VDD1=3.3V, Load : 20pF)

Parameter	Symbol	Min	Typ	Max	unit
BCK Clock Frequency	Tbck	-	472.4	-	ns
BCK Low time	Tbck1	216	236	-	ns
BCK High time	Tbck2	216	236	-	ns
LRCK Clock Frequency	Tlrck	-	44.1	-	kHz
LRCK Output delay	Tlrck1	-20	0	20	ns
DATA Output delay	Tda1	-20	0	20	ns
Output High Voltage	Voh	VDD1-0.4	-	-	V
Output Low Voltage	Vol	-	-	0.4	V

© 2012 ROHM Co., Ltd. All rights reserved.

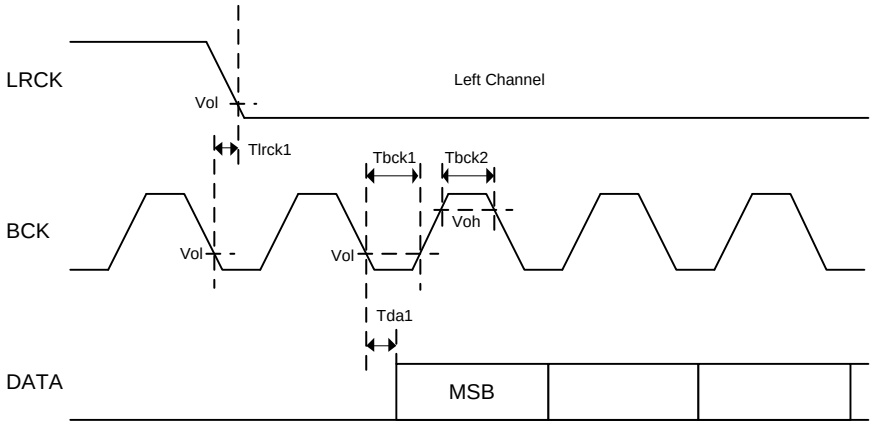

Figure 19 Timing chart

13. SPDIF format

SPDIF format

Signal name	I/O	Function	Remarks
SPDIF	O	SPDIF output	-

SPDIF output becomes enabled by setting SEL_DOUT terminal to L and setting this condition using the I²C command.

Figure20 shows the SPDIF digital audio signal output format.

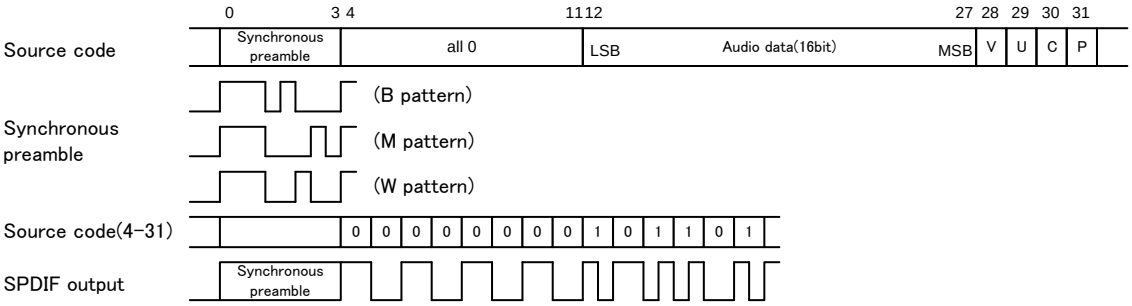

Figure 20 SPDIF Output Format

A sub-frame of SPDIF is composed of synchronous preamble, 16-bit audio data, V bit (validity flag), U bit (user data), C bit (channel status) and P bit (parity bit).

Output rate is fixed to 1X speed.

SPDIF outputs synchronous preamble (source code 0-3) as it is and others (source code 4-31) as bi-phase output.

It outputs L while the operation is stopped.

Synchronous preamble and C bit use 32 frames (≈4.4ms) as one cycle. Table 4. and Table 5 show these formats.

V bit is fixed to L. U bit uses 98 frames (≈13.3ms) as one cycle.

Table 4. Synchronous Preamble Pattern

	L0	R0	L1	R1	L2	R2	L3	R3	L4	R4	L5	R5
0	B	W	M	W	M	W	M	W	M	W	M	W
1	M	W	M	W	M	W	M	W	M	W	M	W
:	:	:	:	:	:	:	:	:	:	:	:	:
31	M	W	M	W	M	W	M	W	M	W	M	W

© 2012 ROHM Co., Ltd. All rights reserved.

Table 5. C Bit Format

	L0	R0	L1	R1	L2	R2	L3	R3	L4	R4	L5	R5
0	0		0		0		0		0		0	
1	0		0		1		0		0		0	
2	0		0		0		0		0		0	
3	0		0		1	0	0	1	0		0	
4	0		0		0		0		0		0	
5	0		0		0		0		0		0	
:	:		:		:		:		:		:	
31	0		0		0		0		0		0	

Table 6. U Bit Format

	L0	R0	L1	R1	L2	R2	L3	R3	L4	R4	L5	R5
0	0	0	0	0	0	0	0	0	0	0	0	0
1	0	0	0	0	0	0	0	0	0	0	0	0
2	1	0	0	0	0	0	0	0	0	0	0	0
3	1	0	0	0	0	0	0	0	0	0	0	0
:	:	:	:	:	:	:	:	:	:	:	:	:
97	1	0	0	0	0	0	0	0	0	0	0	0

P bit is set to 1 if the number of “1s” of source codes 4-30 is odd, and set to 0 if the number is even. Therefore, the number of source codes which turn to 1 for one data must be an odd value, SPDIF ends with L output and preamble output always starts in the same direction.

13.1 SPDIF Timing

(Unless specified, Ta=25℃, VDD1=3.3V, Load : 20pF)

Parameter	Symbol	Min	Typ	Max	unit
SPDIF Clock Frequency	Tck	-	2.822	-	MHz
SPDIF Clock High time	Tck1	150	177	-	ns
SPDIF Clock Low time	Tck2	150	177	-	
Output High Voltage	Voh	VDD1-0.4	-	-	V
Output Low Voltage	Vol	-	-	0.4	V

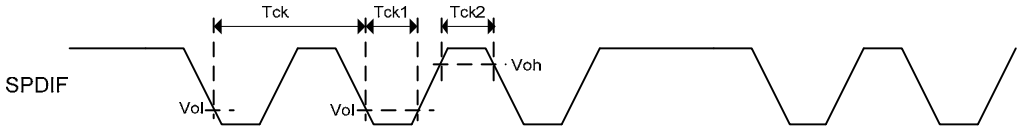

Figure 21 Timing chart

14. USB I/F

USB I/O I/F

Signal name	I/O	Function	Remarks
USB_DP	I/O	USB D+I/O terminal	-
USB_DM	I/O	USB D-I/O terminal	-
REXTI	O	USB bias resistance connection terminal	Connect resistance of 12kΩ ± 1% to GND.

Differential signals of USB_DP and USB_DM enable communications with USB devices.
REXTI terminals become bias resistance connection terminals of the USB-PHY block.

© 2012 ROHM Co., Ltd. All rights reserved.

15. SD I/F

SPI interface for SD memory card I/F

Signal name	I/O	Function	Remarks
SD_CS	O	SPI chip select	-
SD_CLK	O	SPI clock	-
SD_DI	O	SPI data input	-
SD_DO	I	SPI data output	-
SD_CON	I	SD card connect detection terminal	H: Not detecting SD card connection. L: Detecting SD card connection.

These I/F enable communication with SD memory cards through SD memory card slots.

Since SD memory card slot requires detecting insertion of SD memory card, use of slot equipped with SD memory card detecting terminal and connection to SD_CON terminal are required.

SD_CON terminal is pulled up within the device and detects SD memory card connection by L input.

15.1 SD I/F Timing

(Unless specified, Ta=25℃, VDD1=3.3V, Load : 20pF,10kΩ)

Parameter	Symbol	Min	Typ	Max	unit
SD_CS Setup time	Tcss	-	0.25	-	us
SD_CS Hold time	Tcsh	-	1.15	-	us
SD_CLK Clock Frequency	Tclk	-	4.23	-	MHz
SD_DI Output delay	Tod	-20	-	20	ns
SD_DO Data in Setup time	Tds	20	-	-	ns
SD_DO Data in Hold time	Tdh	120	-	-	ns
Output High Voltage	Voh	0.625*VDD1	-	-	V
Output Low Voltage	Vol	-	-	0.25*VDD1	V

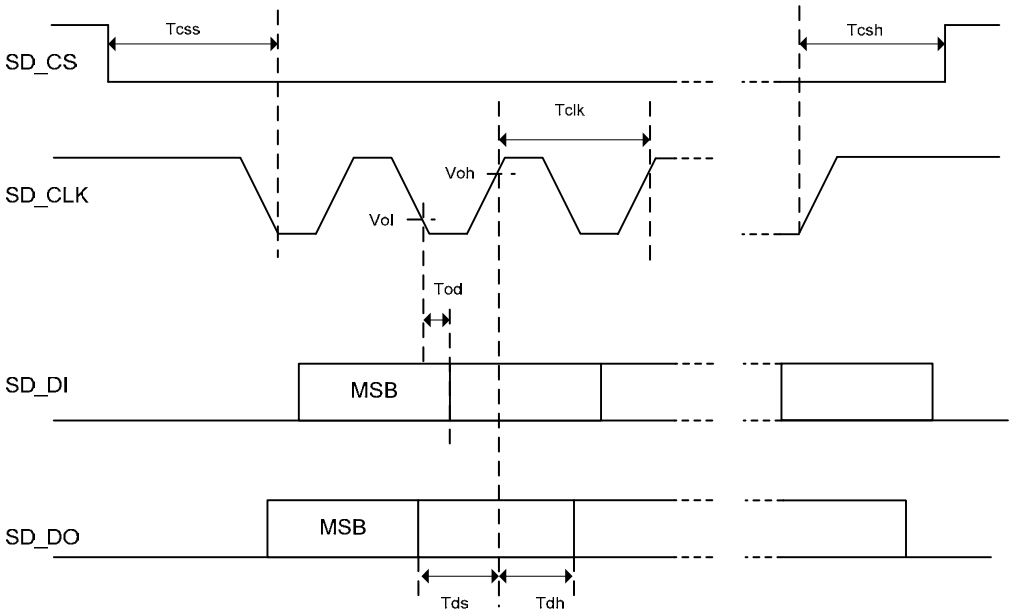

Figure 22 Timing chart of SPI for SD memory card

16. MCHNG

Playing sound tune number detection output

Signal name	I/O	Function	Remarks
MCHNG	O	Music tune number change detection output signal	H: Playing, L: Tune completed/stopped

This signal outputs change of file to be played during playing MP3 file in the memory device.

MCHNG correctly outputs "H" during MP3 decode sequence, outputs "L" during "STOP" status.

Connect it to the interruption port of the microcomputer.

© 2012 ROHM Co., Ltd. All rights reserved.

17. BUSY

BUSY state detection output

Signal name	I/O	Function	Remarks
BUSY	O	BUSY state detection output signal	H: Busy, L: Not Busy

This signal outputs to indicate that this LSI is in BUSY.

BUSY signal analyzes commands from the master and outputs H until the operation is executed.

This LSI ignores command input during BUSY. However, only the ABORT and STOP commands can be accepted even during BUSY, which can be executed. *See Chapter 11.

18. IRPTO

CONFIG outputs it for two more device connection state detection.

Signal name	I/O	Function	Remarks
IRPTO	O	USB CONFIG outputs it for two more device connection state detection.	H: Detection , L: Undetection.

When the USB device is chosen, output it to show that the USB device that two USB CONFIGURATION DESCRIPTOR or more has in this LSI is connected. The timing of an output is dependent on the connected USB device.

19. TEST terminal

By the terminal setting of TEST15, TEST16 and TEST17, It is possible to following function.

TEST15	TEST16	TEST17	Function
H	H	H	Full function effective
L	L	L	Only WMA and MP3 can play-back. The AAC file is disregarded. *1
H	L	L	The IRPTO function is invalidated. *2

*1 Except for BU94601KV

*2 Only BU94604BKV

© 2012 ROHM Co., Ltd. All rights reserved.

20. File detection

20.1 Function

- This function supports FAT16 and FAT32 file systems. (It does not support NTFS and FAT12.)
- The maximum number of playable files per folder

Table 7. Maximum Number of Playable Files

	Root folder	Sub folder
FAT16	512	65534
FAT32	65535	65534

The number of files described above contains unsupported files and folders. If unsupported files and folders exit within the folder and exceed the maximum number, all the supported files may not be played.

- Files less than 100 can be sorted by UNICODE in the FAT order within the folder. Files over 100 are sorted in the FAT order. Also, the folders can be sorted in the same manner and those over 100 are sorted in the FAT order.
- The searchable folder hierarchy is of 8 layers containing the root folder. Figure 23 shows an example of memory layers.

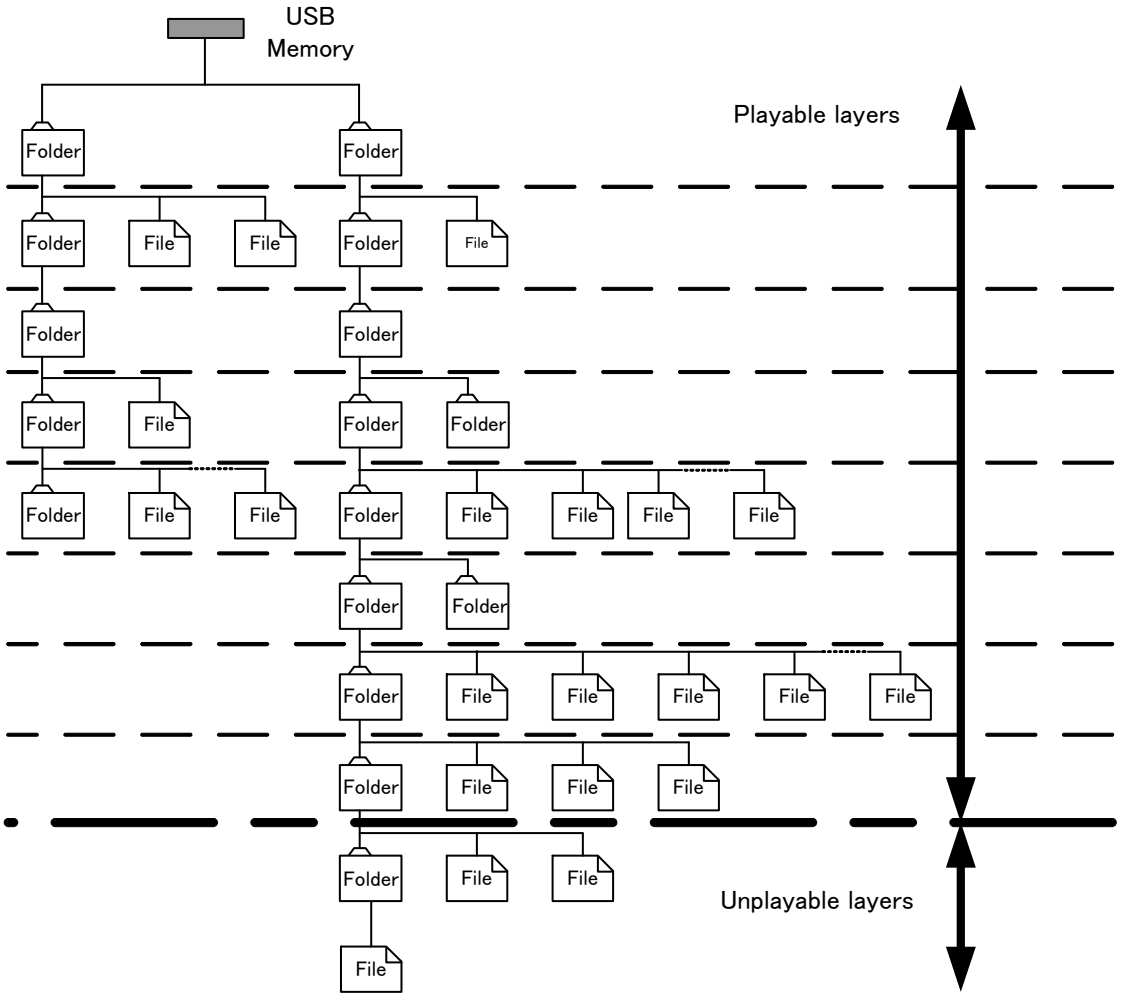

Figure 23 Example of Memory Layers

© 2012 ROHM Co., Ltd. All rights reserved.

20.2 Playable file (BU94601KV doesn't support AAC/WMA files)

The playable file extensions are *.M4A, *.3GP and *.MP4 for AAC files, *.WMA and *.ASF for WMA files, *.MP3, *.MP2 and *.MP1 for MP3 files. (Upper case letters and lower case letters are not distinguished.) Note that the file operation differs in the following cases:

(1) SEL_MP3: See SEL_MP3 for details.
(2) Attribute: AAC/WMA/MP3 file whose attribute is masked can be played. A file with system attributes cannot be played.
(3) Data destroyed file: When the data section of AAC/WMA/MP3 file is destroyed, the music data of the file can be played as much as possible rather than disabling to play the entire file. The section which cannot be played is muted. However, AMUTE terminal remains the H output level. When the header section of WMA and AAC file is destroyed, it plays next.
(4) File name: A file name and its size do not depend on playing.
(5) Extension: When file data is configured in the non-AAC format and its file extension is *.M4A, *.3GP and *.MP4 the state is play next. When file data is configured in the non-WMA format and its file extension is *.WMA, or *.ASF, the state is play next. When file data is configured in the non-MP3 format and its file extension is *.MP3, *.MP2 or *.MP1, the state is silent playing basically. If playable data can be read, only a part of the file can be played. The information on time required to output serial status also becomes uncertain. Then, partial output is done but the correct time information is not output.
(6) File size: When file size is "0", the file do not recognize at AAC/WMA/MP3 files.
(7) This LSI corresponds to the AAC file encoded by iTunes. The versions of iTunes checked operation are 4.*, 5.*, 6.*, and 7.0 to 7.5. The AAC file encoded with other software may cause fault, such as being in the middle of reproduction and skipping to next.
(8) When the extension of WMA file is *.ASF, this LSI corresponds to the ASF file of only an audio stream.

20.3 Playing sequence

The playing sequence of supported files is determined based on the following rules. See Figure24.

(1) Folders are sorted in the order written in FAT (in the order of FAT), and files 1 to 100 are sorted in the order of UNICODE. (*See Chapter 20.4.) Files over 100 are sorted in the order of FAT. Folders over 100 are sorted in the same manner.
Files are sorted following SEL_MP3. Folders are sorted including null folders and those in which supported files are not written. Within each folder, supported files over 100 and folders over 100 are played in the order written to the FAT directory entry.
Since how to write to the directory entry depends on the OS (Operating System) processing to write to the memory, you cannot understand the file playing sequence.
(2) When supported files exist in the root folder (the highest layer), the files are played first.
(3) When all the files in the root folder have been played, those in the folder under the root folder, if any, are played.
(4) When a folder is layered under that, files in the folder are played. When not, the master searches any other folders at the same layer and plays the one, if any.
(5) After playing all the files, the master returns to the root folder as described in (2) and start playing with the first sorted file.

20.4 Folder/file sort

Folders and files are sorted in the following sequence using this LSI.

(1) Obtain up to 100 files and 100 folders in the order written to FAT.
(2) Compare the obtained folder/file names up to 14 characters (including filename extensions) and sort them in the ascending order.*
(3) When the same strings are generated, follow the order written to FAT.
(4) For 101 or more folders and files, follow the order written to FAT.

* The processing of the file name and the folder name is shown in the following.

1)When the LFN(long file name) entry exists, folder/filename is processed as one character in two bytes.
2)When the LFN entry doesn't exist, the SFN(short file name) entry is processed as follows.
2-a) When character-code that appears first is ≧0x80 ,It's treated as the first byte of two byte character. Byte data afterwards is treated as the second byte of two byte character-code, and treated by two bytes as one character.
2-b) When the case that doesn't apply to 2-a) ,that is, the character-code appears first is installed within the range of 0x00-0x7F(US-ASCII) One byte is treated as one character. '0x00' is added and enhanced to Unicode.

Please confirm the specification of the FAT filesystem about details of LFN and SFN.

© 2012 ROHM Co., Ltd. All rights reserved.

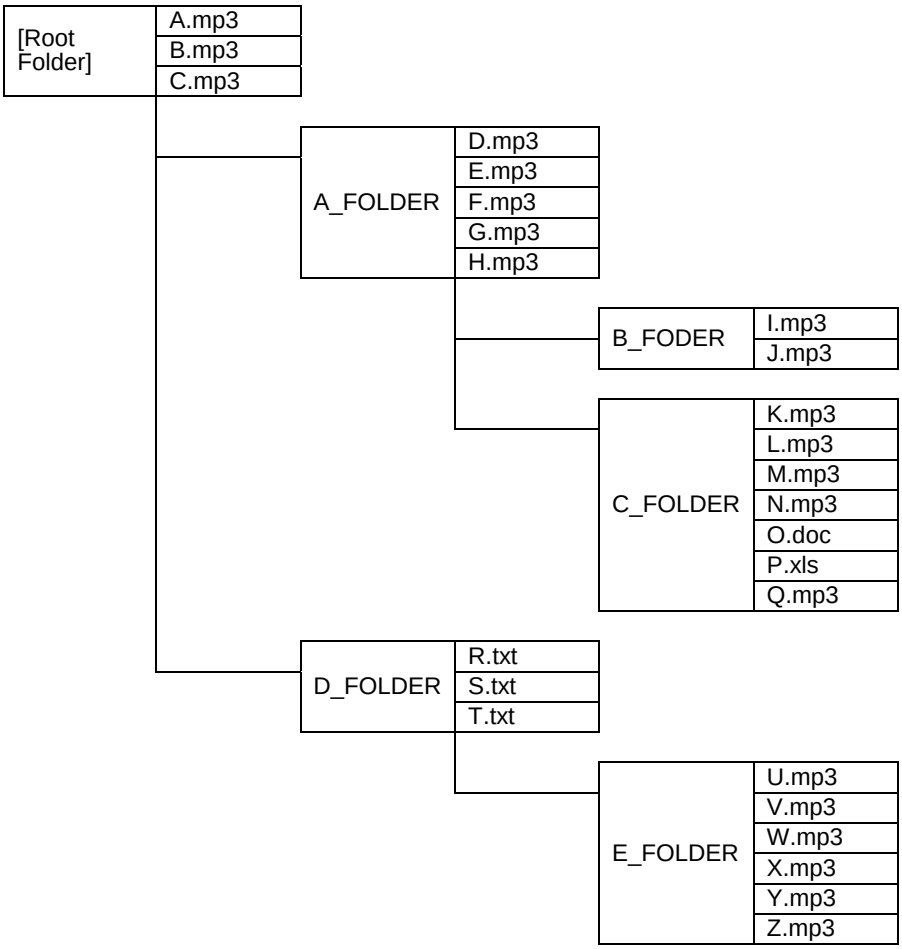

Figure 24 Configurations of Folders and Files within Memory Device

Table 8. MP3 File Playing Sequence for Folder/File Configuration as in Figure24

Playing sequence	File to be played	Remarks
1	A.mp3	· If MP3 files exist in the root folder, those files are played first. · Files are played in the ascending order of UNICODE by file name.
2	B.mp3	
3	C.mp3	
4	D.mp3	· After all MP3 files in the root folder are played, the master searches folders under that layer. · The master searches folders in the ascending order of UNICODE by folder name.
5	E.mp3	
6	F.mp3	
7	G.mp3	
8	H.mp3	
9	I.mp3	
10	J.mp3	
11	K.mp3	
12	L.mp3	
13	M.mp3	
14	N.mp3	
15	Q.mp3	· Non-MP3 files are ignored.
16	U.mp3	· After the master plays all MP3 files including those in the lower layers within A_FOLDER, it moves to a folder in the same layer as A_FOLDER to search MP3 files. · Since there is no MP3 file in D_FOLDER, the layers same as A_FOLDER, the master plays MP3 files in E_FOLDER under that.
17	V.mp3	
18	W.mp3	
19	X.mp3	
20	Y.mp3	
21	Z.mp3	

© 2012 ROHM Co., Ltd. All rights reserved.

20.5 Search within multi-drive and multi-partition

If a device is a multi-drive type or multi partition type, the LSI can recognize the drive by selecting LUN (Logical Unit Number) for the supporting FAT. (MODE2 and MODE3)

If particular LUN isn't selected, the LSI mounts the device whose LUN detected first. (default)

When the multi-card reader is connected, the LSI can recognize device which connected to the card-reader by selecting LUN. But after the device is mounted, it's impossible to recognize states whether the device connected to the card-reader is inserted or removed.

20.6 External HUB search

When the USB connector is connected to a HUB, and a FAT-supported drive is connected ahead of the HUB at mounting the USB for this LSI, only one drive is recognized.

The LSI does not support external HUBs, it cannot detect plugging/unplugging of the drive ahead of the HUB after the USB is mounted.

21. MODE1

21.1 KEY command operation

21.1.1 KEY SCAN (Single Mode)

KEY SCAN operates in the following sequence on the circuit configuration as shown in Figure 9.

(1) KEY_COL1 to 3 output waveforms at timing as shown in Figure25.

(2) By pressing KEY switch, KEY_ROW 1 to 4 are set to L at timing when KEY_COL 1 to 3 are L.

(3) When detecting L input from KEY_ROW 1 to 4 three times, the master judges that KEY has been pressed. Then, the master starts the KEY operation.

Figure 25 KEY SCAN Waveform.

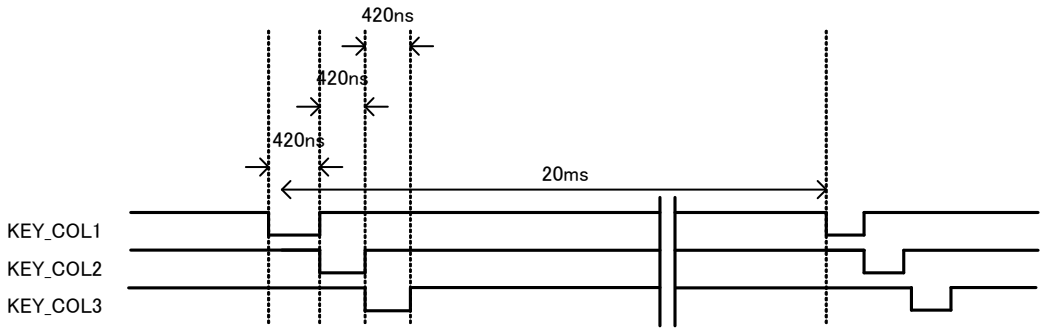

Figure 26 Operating Waveforms when KEY is Pressed

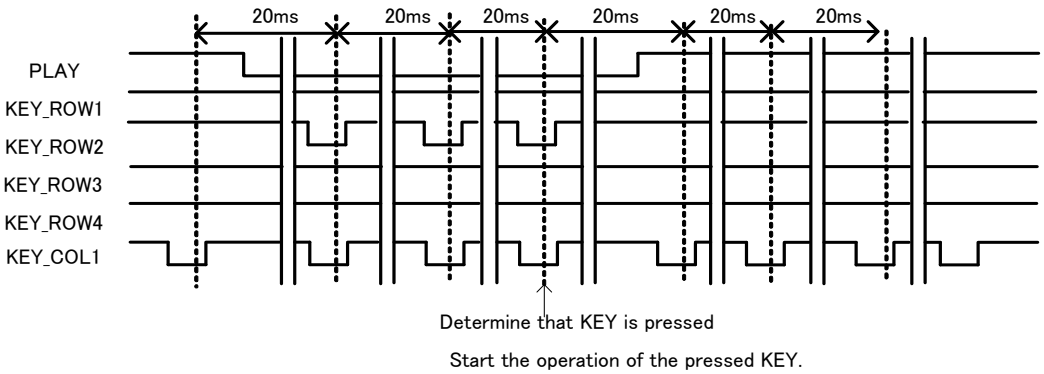

© 2012 ROHM Co., Ltd. All rights reserved.

21.1.2 KEY SCAN (Hold Mode)

KEY SCAN operates in the following sequence on the circuit configuration as shown in Figure 9 .

(1) KEY_COL1 to 3 output waveforms at timing as shown in Figure25.
(2) By pressing KEY switch, KEY_ROW 1 to 4 are set to L at timing when KEY_COL 1 to 3 are L.
(3) When detecting L input from KEY_ROW 1 to 4 three times, the master judges that KEY has been pressed. Then, the master starts judging status of held KEY.
(4) When pressed KEY's decision (L input from KEY_ROW 1 to 4 three times) is detected consecutive 15 times, the master judges that KEY Mode is Hold Mode.
(5) When KEY release is detected in judging status of hold KEY, the master judges that KEY Mode is Single Mode. Then, the master starts the KEY operation.
(6) When Hold Mode is detected, the master starts the KEY operation in Hold Mode. When KEY release is detected in Hold Mode, the master finish the KEY operation.

The keys corresponding to Hold Mode are FF, FB, VOL+, and VOL-.

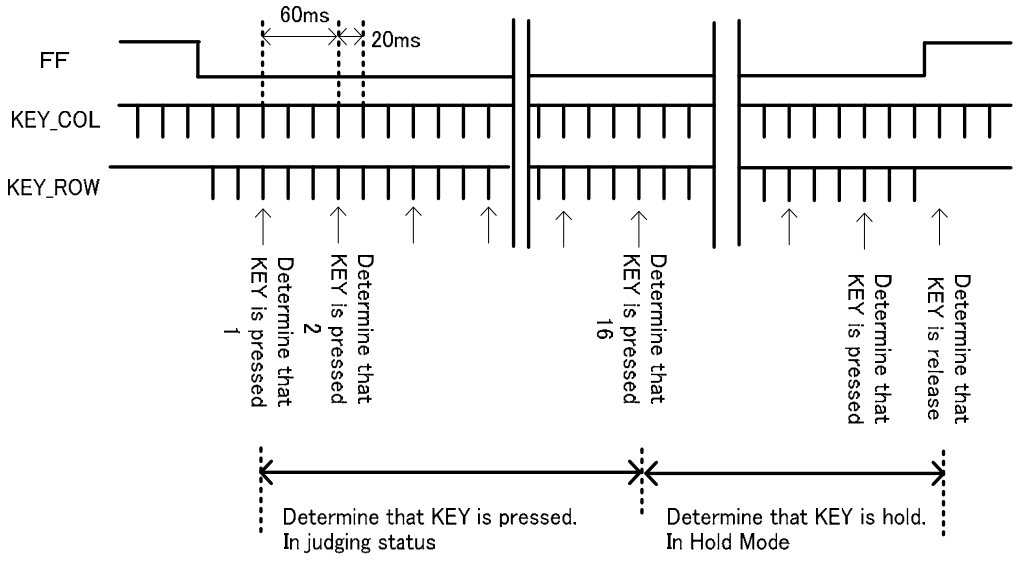

Figure 27 KEY SCAN Waveform.

Note 1: Based on the above sequence, the master determines that KEY is pressed and starts the operation of the pressed KEY, pressing multiple KEYs at the same time will produce different operations depending on the KEY combinations. Therefore, you cannot regulate the operation sequence correctly even simultaneously pressing multiple KEYs will not cause any problems. In Hold Mode, Other pressed KEY is disregarded.

Note 2: Because the KEY input does not have a buffering function, KEY inputs other than those described below are ignored.

© 2012 ROHM Co., Ltd. All rights reserved.

21.1.3 KEY operation

Table 9. shows the types and operations of KEYs.

Table 10. shows enabled/disabled states of KEY operations.

Table 9. KEY Commands and Operation Description

KEY COMMAND	OPERATION DESCRIPTION
PLAY/PAUSE	· When receiving “PLAY/PAUSE” key during stop, the master starts playing the first MP3 file sorted to the recognized device. · When receiving “PLAY/PAUSE” key during play, the master stops playing the MP3 file temporarily. When receiving PLAY/PAUSE key again, the master restarts playing the file.
STOP	· When receiving “STOP” key during play, pause or file search, the master stops playing, pausing or searching the MP3 file.
FF	· When receiving “FF” KEY (Single Mode) during play or pause, the master searches the next supported file in the order of sort of files being played or paused. Upon completion of searching, the master starts playing the file. · During play of the last file, the master returns to the first file in the order of sort and plays the file. · When receiving “FF” KEY (Hold Mode) during play or pause, the master starts fast forward playing the file. When "FF" KEY release is detected, the master return to normal playing. · When music finishes into "FF" KEY (Hold Mode), the master starts fast forward playing from top of the next file. However, when selecting “REPEAT” or “RANDOM”, master search next file by setup.
FB	· When receiving “FB” KEY (Single Mode) during play or pause, the master searches the previous supported file in the order of sort of files being played or paused. Upon completion of searching, the master starts playing the file. · During play of the first file, the master plays the last file in the order of sort. · When receiving "FB" KEY within 1sec from top of file playing, the master searches the previous supported file in the order of sort of files being played. Upon completion of searching, the master starts playing the file. When receiving "FB" KEY over 1sec from top of file playing, the master starts playing from top of the file. · When receiving “FB” KEY (Hold Mode) during play or pause, the master starts fast backward playing the file. When "FB" KEY release is detected, the master return to normal playing. · When music finishes into "FB" KEY (Hold Mode), the master starts fast backward playing from end of the previous file. However, when selecting “REPEAT” or “RANDOM”, master search previous file by setup.
FOL+	· When receiving “FOL+” KEY during play or pause, the master searches the supported files in the next folder in the order of sort of the folder in which the file being played or paused exists. Upon completion of search, the master plays the file. · During play of the file in the last folder in the order of sort, the master plays the first file in the order of sort.
FOL-	· When receiving “FOL-“ KEY during play or pause, the master searches the supported files in the next folder in the order of sort of the folder in which the file being played or paused exists. Upon completion of search, the master plays the file. · During play of the file in the first folder in the order of sort, the master plays the first file in the order of sort in the last folder.
+10	· When receiving “+10” KEY during play or pause, the master searches supported files 10 files next to the current one in the order of sort of the file being played or paused. Upon completion of search, the master starts playing the file. · When the remaining files are less than 10 during play of the current file, the master plays the first file.
VOL+/VOL-	· When receiving “VOL+/VOL-“ KEY while SEL_VOL terminal is set to H, the master controls sound volume. · Sound volume can be controlled at 32 steps from -∞ (minimum volume) to 0dB (maximum volume). · Since VOL+/VOL- KEY does not judge release of KEY, the master turns up or down volume step by step when determining press of the KEY. Therefore, VOL KEY can be held down.

© 2012 ROHM Co., Ltd. All rights reserved.

CHNG_DEV	· The master selects the device between USB memory and SD memory card. To do this, both devices should be connected or one device should correspond to the other (USB to SD or SD to USB). Otherwise, this key operation is ignored. · Stop after selecting the device at the top tune of the device. · REPEAT and RANDOM settings return to the initial values. · When inserting both USB Memory and SD Memory card, or neither USB Memory nor SD Memory card, the master precedes USB Memory.
REPEAT	· This key changes the mode of repeat. · Press of “REPEAT” KEY toggles like: “repeat all tunes in memory” → “repeat one tune” → “repeat within folder”. · When selecting “repeat within folder”, the master repeats files within the folder being played. The initial setting is “repeat all tunes in memory”.
RANDOM	· This key plays the range of ± 128 files from the current one being played in the order of sort at random. · “RANDOM” KEY is enabled to change mode only during play, pause or stop.

Table 10. KEY Operation Enabled/Disabled

	After recognizing device (Search or pause)		During play of device		Searching	Error	
	Recognize either USB or SD	Recognize both USB and SD	Recognize either USB or SD	Recognize both USB and SD		Recognize either USB or SD	Recognize both USB and SD
PLAY/ PAUSE	○	○	○	○	×	×	×
STOP	×	×	○	○	○	×	×
FF	×	×	○	○	×	×	×
FB	×	×	○	○	×	×	×
FOLDER+	×	×	○	○	×	×	×
FOLDER-	×	×	○	○	×	×	×
VOL+	○	○	○	○	×	○	○
VOL-	○	○	○	○	×	○	○
+10	×	×	○	○	×	×	×
CHNG_DEV	×	○	×	○	×	×	○
REPEAT	○	○	○	○	×	×	×
RANDOM	○	○	○	○	×	×	×

○ = Enabled × = Disabled

© 2012 ROHM Co., Ltd. All rights reserved.

21.2 LED operation

Seven types of LEDs used to display the LSI operation states are controlled.
Table 11. shows the types and states of LEDs.

Table 11. Types of LEDs and operation description

Types of LEDs	Operation description
LED_ERROR	Lights when an error occurs. This happens in the following cases: (1) Neither USB memory nor SD memory card is connected. No supported file exists even if these devices are connected. (2) Communication error or disconnection occurs in the memory being played.
LED_PLAY	Lights during play. Blinks during pause.
LED_PSD	Lights when SD memory card is connected and selected. Blinks when SD memory card is connected but SD memory card is not selected. Goes off when SD memory card is not connected.
LED_PUSB	Lights when USB memory is connected and selected. Blinks when USB memory is connected but USB memory card is not selected. Goes off when USB memory is not connected.
LED_ACCESS	Lights during access to USB memory or SD memory card.
LED_RANDOM	Lights during random play.
LED_REPEAT	Lights during folder repeat. Blinks during repeat of one tune. Goes off during repeat all tunes in memory

© 2012 ROHM Co., Ltd. All rights reserved.

22. MODE2

22.1 Command operation

You can operate commands via the I²C serial interface. When using the LSI in MODE2, it can be operated by setting SEL_SLAVE to L. The length of command to be sent varies depending on which command is selected.
Table 12. shows the command specifications.
Table 13. shows enabled/disabled state of each command.

Table 12. Command Operation Description

Command name	Command byte length	Command				Operation description
		1st	2nd	3rd	4th-	
PLAY	2	0x50	0x01	-	-	· When receiving “PLAY” command during stop, the master starts playing the file currently selected. The order sorted from the root folder is initially set. · When receiving “PLAY” command during pause, the master restarts playing the file from that point. · When a state which disables MP3 decoding for more than 5 seconds during play, status “DECO_ERR” is set to H. MP3 decoding is continued. · When receiving “PLAY” command during fast forward (or backward) playing, the master restarts normal playing the file from current point.
PAUSE			0x02	-	-	· When receiving “PAUSE” command during play, the master stops playing the files temporarily.
STOP			0x03	-	-	· When receiving “STOP” command during play, pause or file search, the master stops playing the file. · When receiving “STOP” command during fast forward (or backward) playing, the master stops playing the file. · “STOP” command can be received even during BUSY.
VOL+			0x04	-	-	· When SEL_VOL is set to H, “VOL+” command is enabled. · When receiving “VOL+” command, the master controls sound volume. · Sound volume can be controlled at 32 steps from -∞ (minimum volume) to 0dB (maximum volume).
VOL-			0x05	-	-	· When SEL_VOL is set to H, “VOL-“command is enabled. · When receiving “VOL-“command, the master controls sound volume. · Sound volume can be controlled at 32 steps from -∞ (minimum volume) to 0dB (maximum volume).
REPEAT			0x06	-	-	· This command selects the mode during repeat. · REPEAT command toggles like: “repeat all tunes in memory” → “repeat one tune” → “repeat within folder”. · When STATUS RPT_OFF is set as ON by "REPRAND" command, REPEAT command toggles like: “all play in memory” → “one file play” → “play within folder”. In this mode, it stops upon completion of playing. · When selecting “repeat within folder”, the master repeats files within the folder being played. · The initial setting is “repeat all tunes in memory”. · The last setting to “REPRAND”, “REPEAT” and “RANDOM” commands will be enabled. · This command is as same as the “REPEAT” command in MODE1.
RANDOM			0x07	-	-	· This key plays the range of ± 128 files from the current one being played in the order of sort at random. · When STATUS RPT_OFF is set as ON by "REPRAND" command, REPEAT command toggles like: “one random file play” → “all play with random in memory”. In this mode, it stops upon completion of playing. · The last setting to “REPRAND”, “REPEAT” and “RANDOM” commands will be enabled. · This command is as same as the “RANDOM” command in MODE1.

© 2012 ROHM Co., Ltd. All rights reserved.

CHNG_DEV			0x08	-	-	· The command selects the device between USB memory and SD memory card. To do this, both devices should be connected or one device should correspond to the other (USB to SD or SD to USB). Otherwise, this key operation is ignored. · Stop after selecting the device at the top tune of the device. · REPEAT and RANDOM settings return to the initial values.
ABORT			0x0C	-	-	· This command interrupts Tag analysis. · It interrupts Tag analysis only the file is being played.
SET_ RESUME_ INFO1	8	0x51	0x41	RESUME INFO 1byte-6byte		· This command sets byte 1 to 6 of 42-byte data obtained by “READ_RESUME_INFO”.
SET_ RESUME_ INFO2			0x42	RESUME INFO 7byte-12byte		· This command sets byte 7 to 12 of 42-byte data obtained by “READ_RESUME_INFO”.
SET_ RESUME_ INFO3			0x43	RESUME INFO 13byte-18byte		· This command sets byte 13 to 18 of 42-byte data obtained by “READ_RESUME_INFO”.
SET_ RESUME_ INFO4			0x44	RESUME INFO 19byte-24byte		· This command sets byte 19 to 24 of 42-byte data obtained by “READ_RESUME_INFO”.
SET_ RESUME_ INFO5			0x45	RESUME INFO 25byte-30byte		· This command sets byte 25 to 30 of 42-byte data obtained by “READ_RESUME_INFO”.
SET_ RESUME_ INFO6			0x46	RESUME INFO 31byte-36byte		· This command sets byte 31 to 36 of 42-byte data obtained by “READ_RESUME_INFO”.
SET_ RESUME_ INFO7			0x47	RESUME INFO 37byte-42byte		· This command sets byte 37 to 42 of 42-byte data obtained by “READ_RESUME_INFO”. When RESUME reproduction is possible, play started that music. When RESUME is impossible, play the head music of media is started. · About some kind of setting of Resume Play, see Application Note .
SET_ RESUME_ INFO8			0x48	RESUME INFO 37byte-42byte		· This command sets byte 37 to 42 of 42-byte data obtained by “READ_RESUME_INFO”. When RESUME reproduction is possible, it stops in the music. When RESUME is impossible, it stops at the head of media. · About some kind of setting of Resume Play, see Application Note.
FF	4	0x55	0x01	0x00	0x00	· When receiving FF command during play, pause or stop, the master searches the next supported file in the order of sort of the file being played or paused. · During play of the last file, the master returns to the first file in the order of sort. · Operation stops upon completion of search. · When TAG analysis is set by SEL_ID3 command, operation stops upon completion of TAG analysis.
FF&PLAY				0x01		· When receiving ”FF&PLAY” command during play, pause or stop, the master searches the next supported file in the order of sort of the file being played or paused. · During play of the last file, the master returns to the first file in the order of sort. · Operation starts playing, after completion of search. · When TAG analysis is set by SEL_ID3 command, the master plays the file upon completion of TAG analysis.
FFP_ON				0x02		· When receiving FFP_ON command during play, pause or stop, the master starts fast forward playing from current point. · When music finishes into that FFP_ON command is ON, the master starts fast forward playing from top of the next file. When setting “REPEAT” or “RANDOM”, master search next file by setup.
FFP_OFF				0x03		· When receiving FFP_OFF command during fast forward playing, the master restarts normal playing from current point.

© 2012 ROHM Co., Ltd. All rights reserved.

FB			0x02	0x00	0x00	· When receiving “FB” command during play, pause or stop within 1sec from top of file playing, the master searches the previous supported file in the order of sort of files being played or paused. When receiving “FB” command during play or pause over 1sec from top of file playing, the master searches top of present file. · The master returns to the last file during play of the first file within 1sec from top of file playing. · Upon completion of search, the operation stops. · When TAG analysis is set by SEL_ID3 command, operation stops upon completion of TAG analysis.
FB&PLAY				0x01		·· When receiving “FB&PLAY” command during play, pause or stop within 1sec from top of file playing, the master searches the previous supported file in the order of sort of files being played or paused. When receiving “FB&PLAY” command during play or pause over 1sec from top of file playing, the master searches top of present file. · The master returns to the last file during play of the first file within 1sec from top of file playing. · Operation starts playing, after completion of search. · When TAG analysis is set by SEL_ID3 command, the master plays the file upon completion of TAG analysis.
FBP_ON				0x02		· When receiving FBP_ON command during play, pause or stop, the master starts fast backward playing from current point. · When music finishes into that FBP_ON command is ON, the master starts fast backward playing from end of previous file. When setting “REPEAT” or “RANDOM”, master search previous file by setup.
FBP_OFF				0x03		· When receiving FBP_OFF command during fast backward playing, the master restarts normal playing from current point.
FOL+			0x03	0x00	0x00	· When receiving “FOL+” command during play, pause or stop, the master searches the next folder in the order of sort of the folder in which the file being played or paused exists. · The master returns to the first folder in the order of sort during play of the last folder. · The operation stops upon completion of search. · When TAG analysis is set by SEL_ID3 command, operation stops upon completion of TAG analysis.
FOL+&PLAY				0x01		· When receiving “FOL+&PLAY” command during play, pause or stop, the master searches the next folder in the order of sort of the folder in which the file being played or paused exists. · The master returns to the first folder in the order of sort during play of the last folder. · Operation starts playing, after completion of search. · When TAG analysis is set by SEL_ID3 command, the master plays the file upon completion of TAG analysis.
FOL-			0x04	0x00		· When receiving “FOL-“ command during play, pause or stop, the master search the next folder in the sort of the folder in which the file being played or paused exists. · During play of the first folder, the master returns to the last folder in the order of sort. · The operation stops upon completion of search. · When TAG analysis is set by SEL_ID3 command, operation stops upon completion of TAG analysis.
FOL-&PLAY				0x01		· When receiving “FOL-&PLAY“ command during play, pause or stop, the master searches the next folder in the order of sort of the folder in which the file being played or paused exists. · During play of the top folder, the master returns to the first folder in the order of sort. · Operation starts playing, after completion of search. · When TAG analysis is set by SEL_ID3 command, the master plays the file upon completion of TAG analysis.

© 2012 ROHM Co., Ltd. All rights reserved.

+10			0x05	0x00	0x00	· When receiving “+10” command during play, pause or stop, the master searches the supported file of the 10th tune in the order of sort of the file being played or paused. · When the remaining files to be played are less than 10 in the order of sort, the master returns to the first file. · The operation stops upon completion of search. · When TAG analysis is set by SEL_ID3 command, operation stops upon completion of TAG analysis.
+10&PLAY				0x01		· When receiving “+10&PLAY” command during play, pause or stop, the master searches the supported file of the 10th tune in the order of sort of the file being played or paused. · When the remaining files to be played are less than 10 in the order of sort, the master returns to the first file. · Operation starts playing, after completion of search. · When TAG analysis is set by SEL_ID3 command, the master plays the file upon completion of TAG analysis.
-10			0x06	0x00		· When receiving “-10” command during play, pause or stop, the master searches the supported file of the previous 10th tune in the order of sort of the file being played or paused. · When playing the top 10 or less files in the order of sort, the master returns to the first file. · The operation stops upon completion of search. · When TAG analysis is set by SEL_ID3 command, operation stops upon completion of TAG analysis.
-10&PLAY				0x01		· When receiving “-10&PLAY” command during play, pause or stop, the master searches the supported file of the previous 10th tune in the order of sort of the file being played, paused or stopped. · When playing the top 10 or less files in the order of sort, the master returns to the first file. · Operation starts playing, after completion of search. · When TAG analysis is set by SEL_ID3 command, the master plays the file upon completion of TAG analysis.
USB_ MNT_READY	4	0x5D	0x0B	0x01	0x00	*Only BU94601KV/BU94603KV · This command prepares for USB memory mount. · Be sure to send this command when STATUS turns to USB_INS=H and BUSY=L..
SET_DOUT	4	0x51	0x20	0x00	0x58	· This command outputs digital audio data as I²S (32fs) format. · When SET_DOUT command is sent, SEL_DOUT terminal setting is ignored
					0x59	· This command outputs digital audio data as I²S (48fs) format. · When SET_DOUT command is sent, SEL_DOUT terminal setting is ignored
					0x5B	· This command outputs digital audio data as I²S (64fs) format. · When SET_DOUT command is sent, SEL_DOUT terminal setting is ignored
				0x01	0x01	· This command outputs digital audio data as SPDIF format. · When SET_DOUT command is sent, SEL_DOUT terminal setting is ignored
				0xFF	0x00	· This command stops digital audio output (I²S, SPDIF). · When SET_DOUT command is sent, SEL_DOUT terminal setting is ignored
SET_EQ * See Chapter 22.3.	2	0x52	0x00	-	-	This command turns OFF the EQ setting.
			0x01	-	-	POPS
			0x02	-	-	JAZZ
			0x03	-	-	ROCK
			0x04	-	-	CLASSIC
			0x05	-	-	R&B
			0x07	-	-	This command turns OFF the EQ setting.
			0x08	-	-	BASS BOOST1
			0x09	-	-	POPS+BASS BOOST1
			0x0A	-	-	JAZZ+BASS BOOST1
			0x0B	-	-	ROCK+BASS BOOST1

© 2012 ROHM Co., Ltd. All rights reserved.

			0x0C	-	-	CLASSIC+BASS BOOST1
			0x0D	-	-	R&B+BASS BOOST1
			0x0F	-	-	BASS BOOST2
SET_VOL	2	0x53	Setting value	-	-	· This command sets the sound volume to the 2nd byte value of the command. The setting value ranges 32 steps from 0x00 to 0x1F. Any value outside of the above range is ignored.
REPRAND	2	0x54	0x00	-	-	· This command repeats all the tunes within the memory. This is initially set. · The last setting to “REPRAND”, “REPEAT” and “RANDOM” commands will be enabled.
			0x01	-	-	· The command repeats playing the file within the folder being played. · The last setting to “REPRAND”, “REPEAT” and “RANDOM” commands will be enabled.
			0x02	-	-	· This command repeats playing the file being played. · The last setting to “REPRAND”, “REPEAT” and “RANDOM” commands will be enabled.
			0x03	-	-	· This command plays through the range of ±128 files in the order of the sort from the current one being played at random. · The last setting to “REPRAND”, “REPEAT” and “RANDOM” commands will be enabled.
			0x04	-	-	· This command plays all the tunes within the memory. STATUS RPT_OFF is set as ON. · It stops after the last file playing. · The last setting to “REPRAND”, “REPEAT” and “RANDOM” commands will be enabled.
			0x05	-	-	· This command plays all the tunes within the folder being played. STATUS RPT_OFF is set as ON. · It stops after the last file playing within the folder. · The last setting to “REPRAND”, “REPEAT” and “RANDOM” commands will be enabled.
			0x06	-	-	· This command plays one tunes. STATUS RPT_OFF is set as ON. · It stops after the file playing. · The last setting to “REPRAND”, “REPEAT” and “RANDOM” commands will be enabled.
			0x07	-	-	· This command plays through the range of ±128 files in the order of the sort from the current one being played at random. STATUS RPT_OFF is set as ON. · It stops after the file playing. · The last setting to “REPRAND”, “REPEAT” and “RANDOM” commands will be enabled.
SEL_ID3	2	0x56	0x00	-	-	· This command does not perform Tag analysis. · The file played immediately after set will be enabled first.
			0x01	-	-	· This command runs Tag analysis. · The file played immediately after set will be enabled first. · Upon completion of Tag analysis, the data is written to the status register.
SEL_TOC	2	0x57	0x00	-	-	· This command does not perform TOC analysis. · TOC analysis is not performed at initial setting.
			0x01	-	-	· When receiving the command, inserting into the device or changing the device, the master analyzes the total folders (including root directory) and total supported files within the device. · The number of total supported files conforms to SEL_MP3 terminal. · When receiving the command, only change from OFF to ON is executed. · Upon completion of TOC analysis, the master returns to the top tune of the device and stops. · After TOC analysis, the data is written to the status register.

© 2012 ROHM Co., Ltd. All rights reserved.

SEL_12MOUT	2	0x58	0x00	-	-	· This command stops 12MHz clock output from CLKOUT12 terminal.
			0x01	-	-	· This command enables 12 MHz clock output from CLKOUT12 terminal.
SEL_WDT	2	0x5A	0x00	-	-	· This command stops WDT.
			0x01	-	-	· This command writes “1” to STATUS WDT_RFLG.
SET_RPM	6	0x5B	0x00	setting		· This command set up playtime and skiptime for fast forward playing and fast backward playing. Fast forward and fast backward playing repeat this cycle by making {playtime(M) + skiptime(N) +error(O)} into 1 cycle. With an error, it depends on the cajoled error between the minimum decoding unit and playtime, and the real time which searches skiptime. Errors differ by every file and every composition in memory. · This command set up that playtime is M[15:0]=[4th byte, 3rd byte] and skiptime are N[15:0]=[6th byte and 5th byte]. Initial value set playtime is 300 mili second=M[15:0]=[4 th byte=x01, 3rd byte=x2C] and skiptime is 2100 mili second=N[15:0]=[6 th byte=x08, 5 th byte=x34]. When command set up to 0x0, setting value is initial value. The playtime should set up 300ms or more, and skiptime should set up below (playtime x16).
SET_ RPM_ATT	4	0x5B	0x01	setting	0x00	· This command set up the attenuation level under fast forward and backward playing. An attenuation level serves as (-6dB X [3rd byte]). A setup can be specified from 0x00 to 0x10.As for an initial value, 0x02=-12dB is set up. It becomes equivalent to MUTE by setup of 0x10.
SET_ UPLOAD_ FILE1	8	0x51	0x51	NAME[0:5]		Specify the part of the first half of the file name of the file for File Read Function. *Bury it by 0x20 when the file name(NAME) doesn't come up to eight bytes.
SET_ UPLOAD_ FILE2	8	0x51	0x52	NAME[6:7] EXT[0:2]		Specify the part of the latter half of the file name of the file for File Read Function. *Bury it by 0x20 when the file name(NAME) doesn't come up to eight bytes. Bury it by 0x00 when the file extension doesn't come up to three bytes. It targets neither the file name comparison since 0x00 of the end in the comparison.
UPLOAD_ END	2	0x51	0x53	-	-	The File Read function is ended. Transmit after completing the file reading.
SET_TOUT_M	4	0x5D	0x07	0xYY	0xXX	The ACK timeout of the command under memory mount is set up. The set point x100 (msec) is timeout. At the time, XX is upper byte and YY is lower byte. An initial value is 30 sec (YY=0x2C, XX=0x01), and maximum value is 60 sec (YY=0x58, XX=0x02).If set point is over the maximum value, this command is ignored. Mount ERROR will be carried out if a timeout occur.
SET_TOUT_C	4	0x5D	0x08	0xYY	0xXX	The ACK timeout of the commands at the time of PLAY or STOP or PAUSE (except during mount) is set up. The set point x100 (msec) is timeout. At the time, XX is upper byte and YY is lower byte. An initial value is 5 sec (YY=0x32, XX=0x00), and maximum value is 60 sec (YY=0x58, XX=0x02). If set point is over the maximum value, this command is ignored. Communication ERROR will be carried out if a timeout occur.

© 2012 ROHM Co., Ltd. All rights reserved.

SET_ USB_R_ WAIT	4	0x5D	0x09	0xXX	0x00	The wait time after bus reset is set up at the time of USB memory recognition. The set point (XX) x200 (msec) is wait time. An initial value is 600 msec (XX=0x03), and maximum value is 51.2 sec (XX=0xFF).
GET_ VENDOR	2	0x5F	0x16	-	-	A vendor code and Product ID are stored in COMAREA. Please read COMAREA after GET_VENDOR command transmission and acquire code data. Offset 0x20 : Vendor code Lower byte 0x21 : Vendor code Upper byte 0x22 : Product code Lower byte 0x23 : Product code Upper byte
FORCE_ DISCON_USB	2	0x5D	0x02	-	-	Force mounted USB memory to be disconnected.
FORCE_ CON_USB	2	0x5D	0x0A	-	-	Mounts USB memory again, which Mount ERROR occurred.
FORCE_ DISCON_SD	4	0x5D	0x0C	0x01	0x00	Force SD memory to be disconnected, which Mount ERROR occurred
FORCE_ CON_SD	4	0x5D	0x0C	0x00	0x00	Mounts SD memory again, which was disconnected by FORCE_DISCON_SD command.
SET_LUN	4	0x5D	0x0D	setting	0x00	LUN, which USB memory mounts, is specified. LUN specified at the time of USB connection mounts. When another LUN is already mounted, it re-mounts to specified LUN. When not specifying LUN, effective LUN becomes an AUTO setup and LUN detected first is mounted at the time of USB memory connection. (Initial value)
RESET_LUN	2	0x5D	0x0E	-	-	Effective LUN is set to AUTO and LUN detected first comes to be mounted at the time of USB memory connection.

© 2012 ROHM Co., Ltd. All rights reserved.

Table 13. Command Enabled/Disabled in Various States

	After recognizing device, search or pause		During play of device		Searching	During FFP	During FBP	Error	
	Recognize either USB or SD	Recognize either USB or SD	Recognize either USB or SD	Recognize both USB and SD				Recognize either USB or SD	Recognize both USB and SD
PLAY	○	○	×	×	×	○	○	×	×
PAUSE	×	×	○	○	×	○	○	×	×
STOP	×	×	○	○	○	○	○	×	×
VOL+	○	○	○	○	×	○	○	○	○
VOL-	○	○	○	○	×	○	○	○	○
REPEAT	○	○	○	○	×	○	○	×	×
RANDOM	○	○	○	○	×	○	○	×	×
CHNG_DEV	×	○	×	○	×	○	○	×	○
ABORT	×	×	×	×	○	×	×	×	×
SET_RESUME_INFO1-8	○	○	○	○	×	×	×	×	×
FF	○	○	○	○	×	×	×	×	×
FF&PLAY	○	○	○	○	×	×	×	×	×
FFP_ON	×	×	○	○	×	○	○	×	×
FFP_OFF	×	×	×	×	×	○	×	×	×
FB	○	○	○	○	×	×	×	×	×
FB&PLAY	○	○	○	○	×	×	×	×	×
FBP_ON	×	×	○	○	×	○	○	×	×
FBP_OFF	×	×	×	×	×	×	○	×	×
FOL+	○	○	○	○	×	×	×	×	×
FOL+&PLAY	○	○	○	○	×	×	×	×	×
FOL-	○	○	○	○	×	×	×	×	×
FOL-&PLAY	○	○	○	○	×	×	×	×	×
+10	○	○	○	○	×	×	×	×	×
+10&PLAY	○	○	○	○	×	×	×	×	×
-10	○	○	○	○	×	×	×	×	×
-10&PLAY	○	○	○	○	×	×	×	×	×
USB_MNT_READY	○	○	○	○	○	○	○	○	○
SET_DOUT	○	○	○	○	×	○	○	○	○
SET_EQ	○	○	○	○	×	○	○	○	○
SET_VOL	○	○	○	○	×	○	○	○	○
REPRAND	○	○	○	○	×	○	○	×	×
SEL ID3	○	○	○	○	×	○	○	×	×
SEL_TOC	○	○	○	○	×	○	○	×	×
SEL 12MOUT	○	○	○	○	×	○	○	○	○
SET_WDT	○	○	○	○	×	○	○	○	○
SET_RPM	○	○	○	○	×	○	○	○	○
SET_RPM_ATT	○	○	○	○	×	○	○	○	○
SET_UPLOAD_FILE1	After recognizing the USB memory, only the halt condition is the command effective.								
SET_UPLOAD_FILE2									
UPLOAD_END									
SET_TOUT_M	○	○	○	○	×	○	○	○	○
SET_TOUT_C	○	○	○	○	×	○	○	○	○
SET_USB_RWAIT	○	○	○	○	×	○	○	○	○
GET_VENDOR	○	○	○	○	×	○	○	○	○
FORCE_DISCON_USB	○	○	○	○	○	○	○	×	×
FORCE_CON_USB	×	×	×	×	×	×	×	○	○

© 2012 ROHM Co., Ltd. All rights reserved.

FORCE_DISCON_SD	×	×	×	×	×	×	×	○	○
FORCE_CON_SD	×	×	×	×	×	×	×	○	○
SET_LUN	○	○	○	○	×	○	○	○	○
RESET_LUN	○	○	○	○	×	○	○	○	○

○= Enabled × = Disabled

© 2012 ROHM Co., Ltd. All rights reserved.

22.2 Status output

The operation information, such as internal status, play time information, folder information, file information, ID3Tag information, AACTag information and WMATag information, is output using an I²C interface.
Statuses as shown in Table 14. MODE 2 Status Register Map are output.
The status register has a ring buffer structure of OFFSET 0x00-0x7F. The OFFSET position is automatically incremented after reading byte data.
Status read specifies OFFSET of the status register map. There are two methods available: to read a desired number of bytes continuously from the OFFSET position and to read the data by one command without specifying the OFFSET position. Figure 15. shows the status output commands. Table 16. shows the enabled/disabled state of the status output commands.
Status register outputs a byte data of OFFSET 0x00-0x7F by "Little Endian" format. (Exception exists when using READ_ID3_TITLE, READ_ID3_ARTIST, and READ_ID3_ALBUM command. See Table 15. MODE2 Status Output Commands)

Table 14. MODE2 Status Register Map

OFFSET	Status	bit7 (MSB)	bit6	bit5	bit4	bit3	bit2	bit1	bit0 (LSB)
0x00	STATUS1	ERROR 0: No error 1: Error occurs	SEARCH 0: Search stop 1: Searching	SEL_ID3 0: ID3Tag OFF 1: ID3Tag ON	SEL_TOC 0: TOC display OFF 1: TOC display ON	DEC_ERR 0: No error 1: Error occurs	STOP 0: Not stopped 1. Stopping	PAUSE 0: Not paused 1: Pausing	Play 0: Not played 1: Playing
0x01	STATUS2	USBINS 0: USB not connected 1: USB connection detected	SDINS 0: SD not connected 1: SD connection detected	USBFILE Playable file within USB memory 0: Absent 1: Present	SDFILE Playable file within SD memory 0: Absent 1: Present	MDEVUSB USB memory 0: Not recognized 1: Recognized	MDEVSD SD memory 0: Not recognized 1: Recognized	PDEVUSB PDEVUSB USB memory 0: Stopping 1: Playing/Tag analyzing	PDEVSD PDEVUSB SD memory 0: Stopping 1: Playing/Tag analyzing
0x02	STATUS3	BUSY 0: Not BUSY 1: BUSY	MCHNG Tune number change detection 0: Tune ended/stopped 1: Playing/ stop before playing	0	ID3EXIST TAG information 0: Not exist 1: Exist	ID3RSID1 ID3Tag Version1 0: Absent 1: Present	ID3RSID2 ID3Tag Version2 0: Absent 1: Present	TINFUSB Total number of folders/files within USB memory 0: Not obtained 1: Obtained	TINFSD Total number of folders/files within SD memory 0: Not obtained 1: Obtained
0x03	STATUS4	0	0	0	0	RPT_OFF Setting after last file playing 0: repeat 1: stop	RANDOM Random play setting 0: OFF 1: ON	REP1 One-tune repeat setting 0: OFF 1: ON	REPFOL Folder repeat setting 0: OFF 1: ON
0x04	STATUS5	12MOUT 12 MHz clock output 0: OFF 1: ON	WDT_RFLG 0: after RESET	WMAPLAY Play file information * 0: MP3 1: WMA , 2: AAC 3:Device with 2 configurations or more		FBP Fast backward playing 0: OFF 1: ON	FFP Fast forward playing 0: OFF 1: ON	0	RES_ERR Resume error 0: No error 1: Error occurs
0x05	VOLINF	0	0	0	VOLINF Sound volume information [4: 0]				
0x06	EQINF	EQINF Equalizer setting information 0000: OFF 0001: POPS 0010: JAZZ 0011: ROCK 0100: CLASSIC 0101: R&B 1000: BASS BOOST 1001: POPS+BASS 1010: JAZZ+BASS 1011: ROCK+BASS 1100: CLASSIC+BASS 1101: R&B+BASS 1111 BASS BOOST2				0	0	0	0
0x07	PRECOM	PRECOM Previous Command information 0: normal 1: miss							
0x08	DOUT	HUB Detection Flag 0: Not Detection 1: Detection	Un Support device Detection Flag 0: Not Detection 1: Detection	Vendor code Detection Flag 0: Apple Not Detection 1: Apple Detection	0	0	0	0	DOUT Audio output 0: LINE output 1: I2S / SPDIF

© 2012 ROHM Co., Ltd. All rights reserved.

0x09	DOUTINF	DOUTINF I2S format status 0x58: 32fs(Initial value) 0x59: 48fs 0x5B: 64fs 0x00: OFF 0x01: SPDIF output	
0x0A	PFOLNL	PFOLNL Playing folder number lower-order byte [7:0]	
0x0B	PFOLNH	PFOLNH Playing folder number upper-order byte [15:8]	
0x0C	PFILENL	PFILENL Playing file number lower-order byte [7:0]	
0x0D	PFILENH	PFILENH Playing file number upper-order byte [15:8]	
0x0E	PSEC	Playing time second information [7:4]x10 sec.	Playing time second information [3:0]x1 sec.
0x0F	PMIN	Playing time minute information [7:4]x10 min.	Playing time minute information [3:0]x1 min.
0x10	TFOLUSBL	TFOLUSBL USB memory total folder number lower -order byte [7:0]	
0x11	TFOLUSBH	TFOLUSBH USB memory total folder number upper-order byte [15:8]	
0x12	TFILEUSBLL	TFILEUSBLL USB memory total file number lower -order byte [15:0] [7:0]	
0x13	TFILEUSBLH	TFILEUSBLH USB memory total file number upper-order byte [15:0] [15:8]	
0x14	TFILEUSBHL	TFILEUSBHL USB memory total file number lower -order byte [31:16] [23:16]	
0x15	TFILEUSBHH	TFILEUSBHH USB memory total file number upper-order byte [[31:16] [31:24]	
0x16	TFOLSDL	TFOLSDL SD memory total folder number lower -order byte [7:0]	
0x17	TFOLSDH	TFOLSDH SD memory total folder number upper-order byte [15:8]	
0x18	TFILESDL	TFILESDLL SD memory total file number lower -order byte [15:0] [7:0]	
0x19	TFILESDLH	TFILESDLH SD memory total file number upper-order byte [15:0] [15:8]	
0x1A	TFILESDHL	TFILESDHL SD memory total file number lower -order byte [31:16] [23:16]	
0x1B	TFILESDHH	TFILESDHH SD memory total file number upper-order byte [31:16] [31:24]	
0x1C	LANGL	LANGL Language code information lower -order byte [7:0]	
0x1D	LANGH	LANGH Language code information upper -order byte [15:8]	
0x20 | 0x7F	COMAREA	COMAREA Data common area The content varies depending on the status read command.	

* Play file information: The value is 0 when BU94601KV. “3: Device with 2 configurations or more” is supported only by BU94604BKV.

© 2012 ROHM Co., Ltd. All rights reserved.

Table 15. MODE2 Status Output Commands

Command name	Command		Status output bytes	Status
	1st byte	2nd byte		
READ_BUFF	0x5E	OFFSET	Optional	· The command outputs the desired bytes of data from the OFFSET position specified in the status register map. · Since the status register functions as a ring buffer of 0x00-0x7F, the master returns to 0x00 after OFFSET position 0x7F during data read.
READ_STATUS	0x5F	0x00	5	· This command outputs the data of OFFSET 0x00-0x04 in the status buffer.
READ_PLAY_INFO		0x01	6	· This command outputs the data of OFFSET 0x0A-0x0F in the status buffer.
READ_VOL		0x02	1	· This command outputs the data of OFFSET 0x05 in the status buffer.
READ_EQ		0x03	1	· This command outputs the data of OFFSET 0x06 in the status buffer.
READ_ID3_TITLE		0x04	64	· This command outputs the data of Tag Title. *1
READ_ID3_ARTIST		0x05	64	· This command outputs the data of Tag Artist.*1
READ_ID3_ALBUM		0x06	64	· This command outputs the data of Tag Album.*1
READ_FILE_NAME		0x07	64	· This command outputs the data of playing file name. see 20.4
READ_FOLDER_NAME		0x08	64	· This command outputs the data of folder name includes playing file. see 20.4
READ_RESUME_INFO * See Chapter 22.4.		0x09	42	· This command outputs the data to resume. see 22.4
READ_VERSION		0x10	1	· This command outputs the data of Firmware version.
READ_FILE_SIZE		0x11	4	· The size of a specified file of the File Read function is acquired. It outputs with LittleEndian. · When the file doesn't exist, "0xFF, 0xFF, 0xFF, and 0xFF" is output.
READ_FILE_DATA		0x12	96	· The file data of a specified file of the File Read function is read. · The 92byte data reading is possible by one time. · Four head bytes are file offsets. It outputs it with LittleEndian.
READ_LUN		0 x 17	1	· In case of AUTO detection mode of LUN,LUN of mounted USB memory can be read. · If LUN is specified using the "SET_LUN" command, specified LUN of mounted USB memory can be read. But if failed to mount, 0xFF is read. · Attention) When memory connected to multi-card reader is removed or re-inserted, LUN read by this command is NOT correct until mount of re-inserted media is completed.
READ_LUN_NUM		0 x 18	1	· Read the total of LUN of the USB memory which is connected now.

© 2012 ROHM Co., Ltd. All rights reserved.

READ_SET_LUN		0 x 19	1	· Read LUN specified by the "SET_LUN" command. In not setting up, 0xFF is read.

*1 : BOM(Byte Order Mark) might enter two head bytes according to ID3 data. Status register outputs byte data by "Big Endian" format when WMA tag reading.

Table 16. Command Enabled/Disabled in Various States

	After recognizing device (stopping after searching)	During play of device	Searching	Error
READ_BUFF	○	○	○	○
READ_STATUS	○	○	○	○
READ_PLAY_INFO	○	○	×	×
READ_VOL	○	○	×	○
READ_EQ	○	○	×	○
READ_ID3_TITLE	○	○	×	×
READ_ID3_ALBUM	○	○	×	×
READ_ID3_ARTIST	○	○	×	×
READ_FILE_NAME	○	○	×	×
READ_FOLDER_NAME	○	○	×	×
READ_RESUME_INFO	○	○	×	×
READ_VERSION	○	○	×	×
READ_FILE_SIZE	After recognizing the USB memory, only the halt condition is the command effective.			
READ_FILE_DATA				
READ_LUN	○	○	×	○
READ_LUN_NUM	○	○	×	○
READ_SET_LUN	○	○	×	○

○ = Enabled, × = Disabled

© 2012 ROHM Co., Ltd. All rights reserved.

22.3 Equalizer

You can select 5 types of equalizer and 2 types of BassBoost for the audio line output using a command (see Table 7). Combination of equalizer and BassBoost1 is available.
Clipping may occur by the combination of volume and equalizer setting.
Equalizer setting is enabled even when line output is not selected. No change of sound quality by the equalizer is found in digital outputs.
Figures 28 to 33 show the frequency characteristics of each filter.

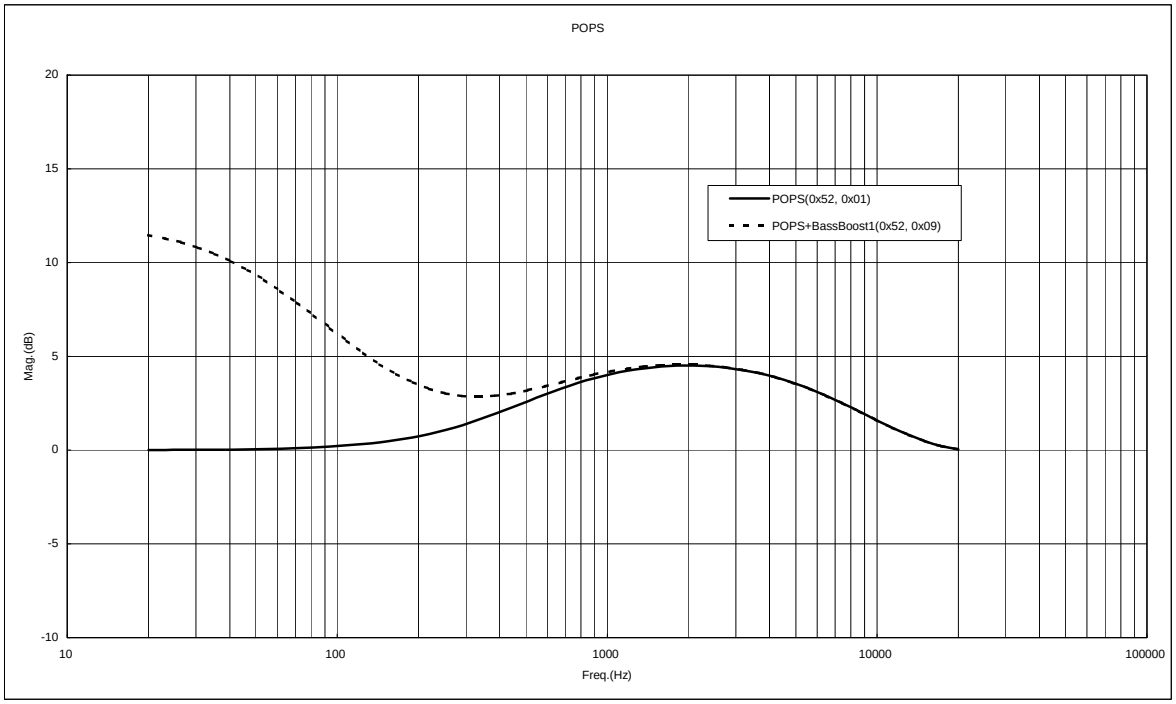

Figure 28 POPS Frequency Characteristics

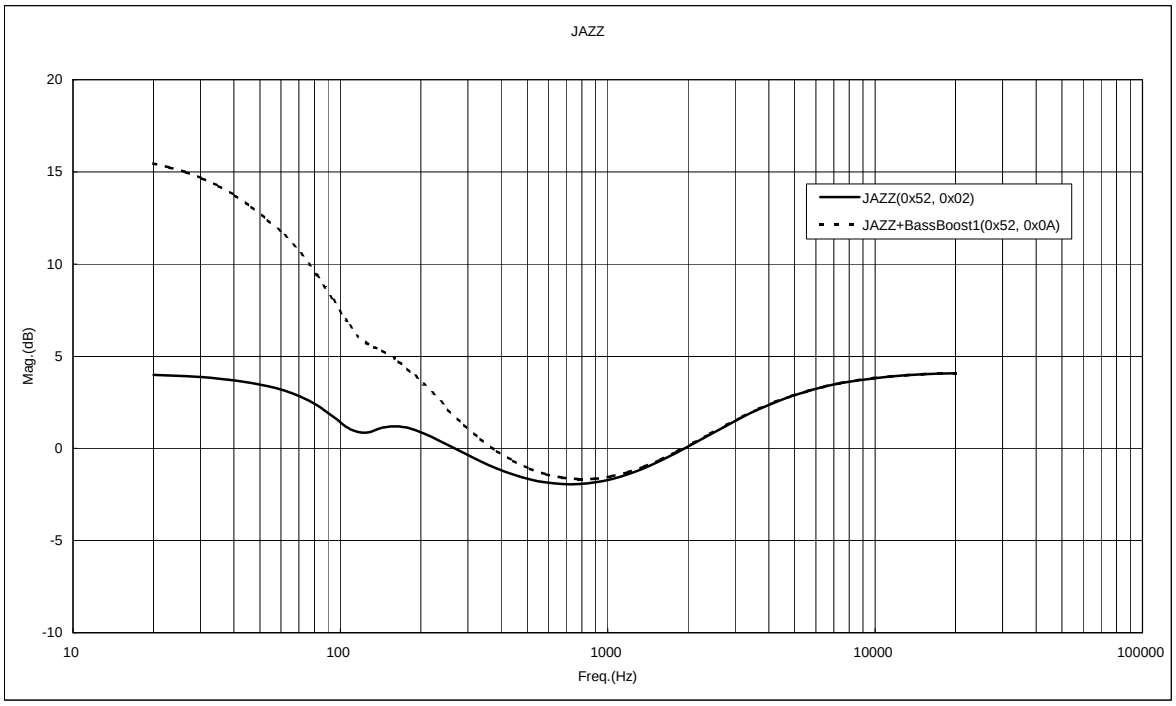

Figure 29 JAZZ Frequency Characteristics

© 2012 ROHM Co., Ltd. All rights reserved.

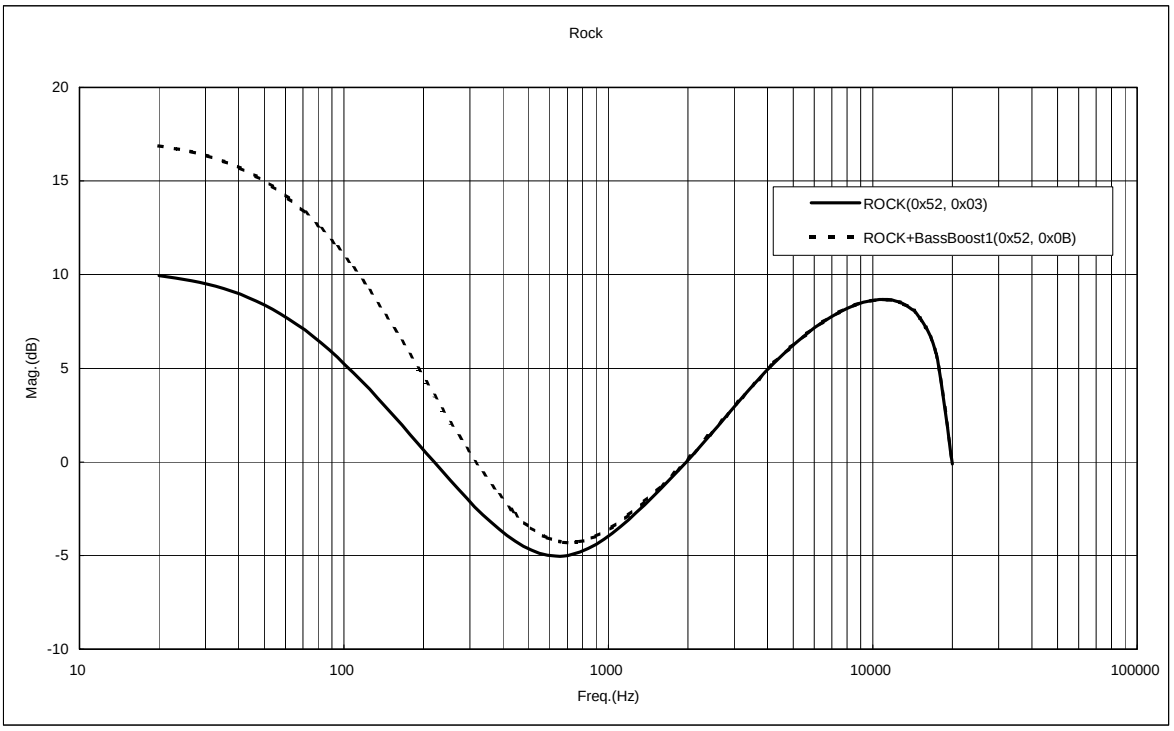

Figure 30 ROCK Frequency Characteristics

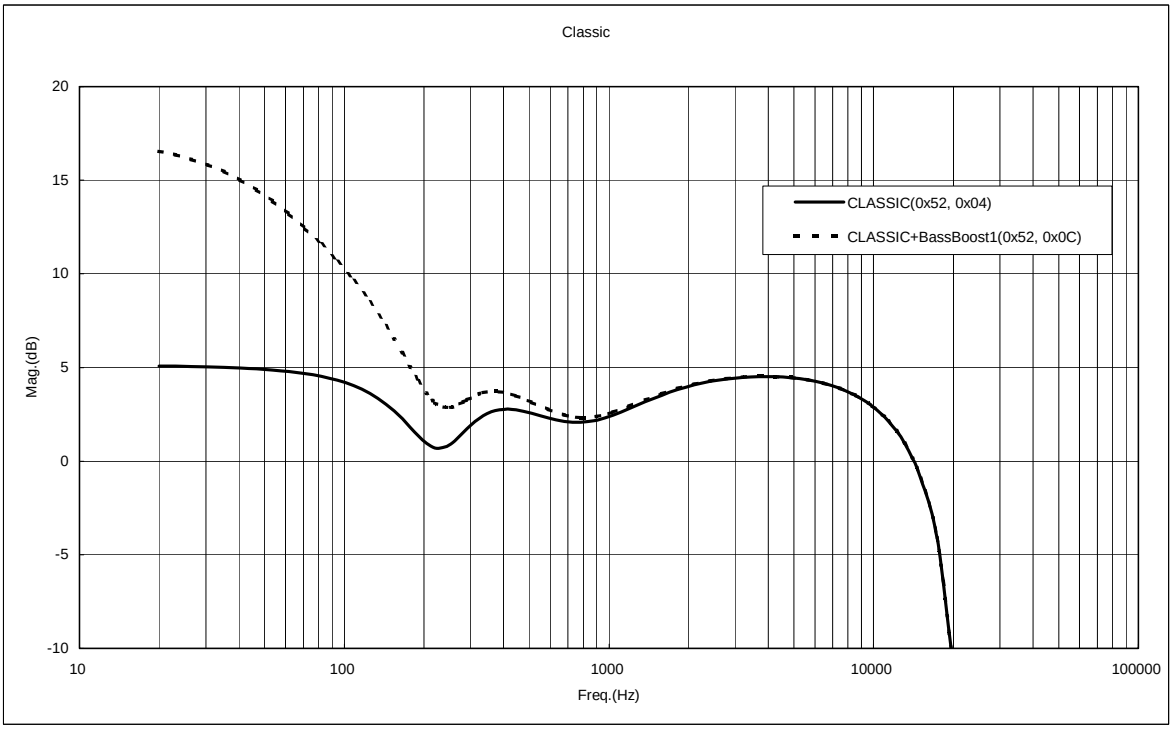

Figure 31 CLASSIC Frequency Characteristics

© 2012 ROHM Co., Ltd. All rights reserved.

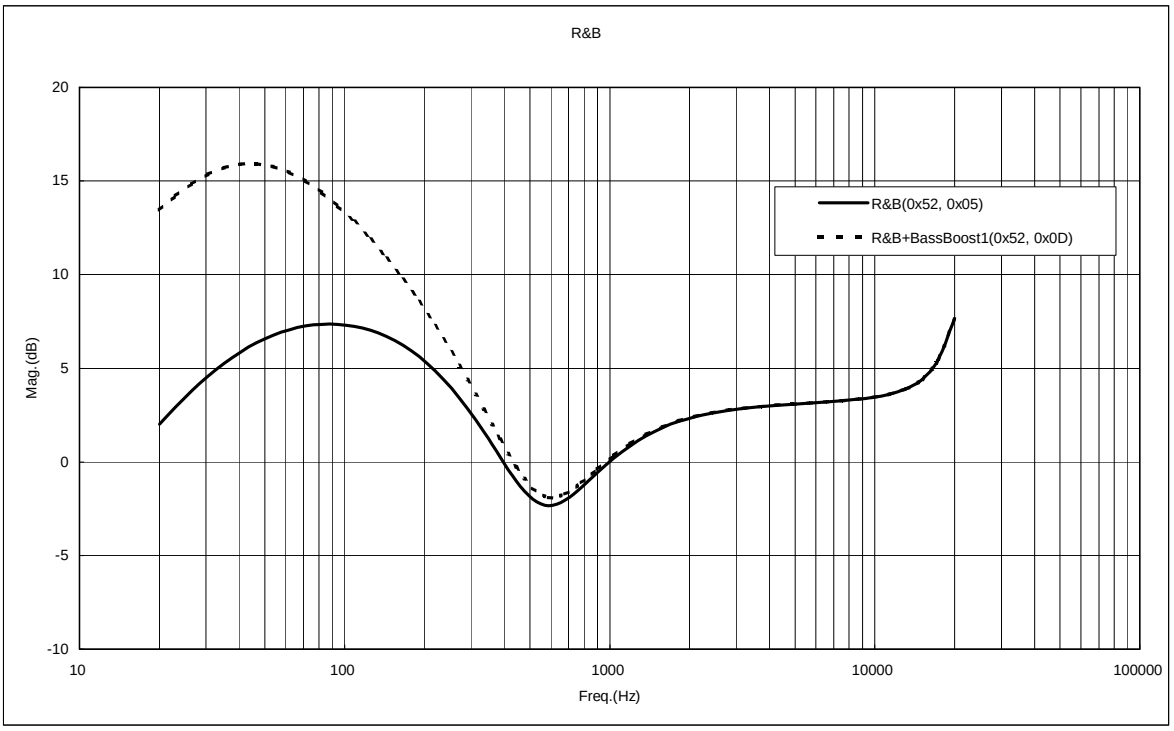

Figure 32 R&B

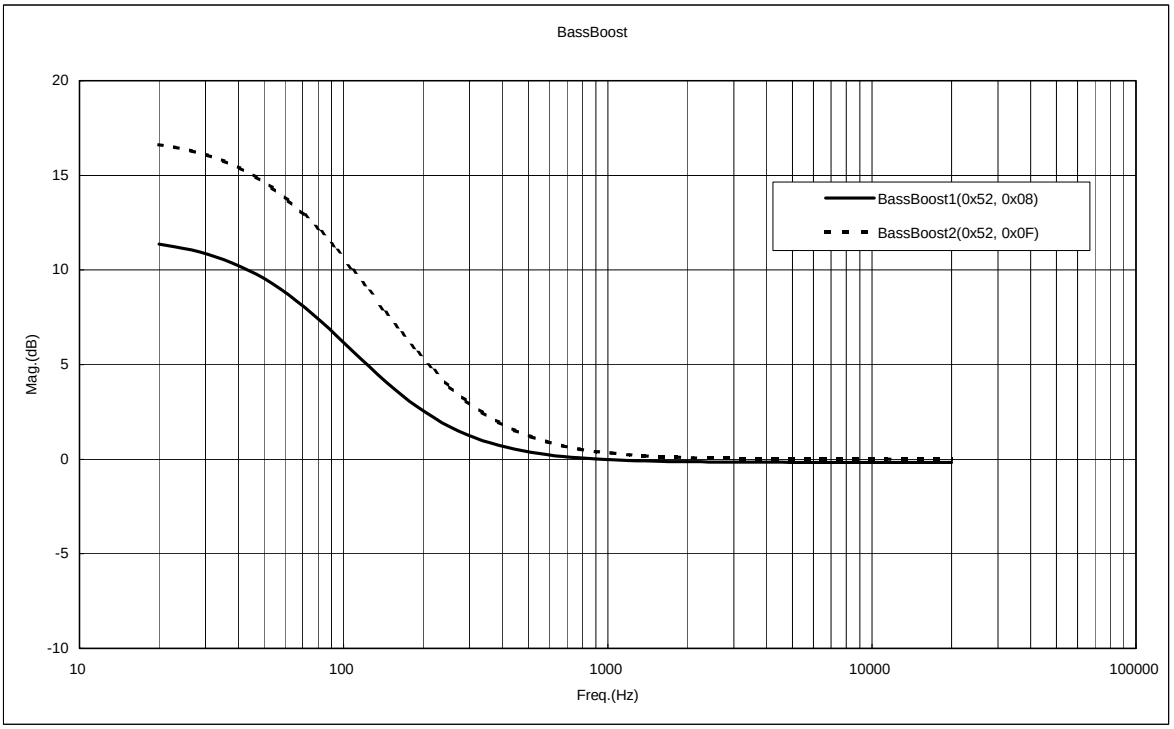

Figure 33 Bass Boost

© 2012 ROHM Co., Ltd. All rights reserved.

22.4 Resume information

This LSI outputs the information required to implement the resume function using the “READ_RESUME_INFO” command.

Table 17. shows the resume information status register structure.

Table 17. Resume Information Register Structure

Status OFFSET	Resume information
0x20-0x49	Resume Information data [42 bytes]

i.Resume Information data :

Shows the file’s information and play’s information now.

This is a number uniquely set to the LSI.

Since the above 42-byte resume information is used to execute resume play, do not change the contents before use. When you use changed contents, the action cannot assure.

You can implement the resume function by reading the resume information read using the “READ_RESUME_INFO” command and then writing the information using the “SET_RESUME_INFO1-7” command. After “SET_RESUME_INFO1-7” is all written, the LSI automatically searches and plays a resume file from the time, which read “READ_RESUME_INFO” command upon completion of writing of “SET_RESUME_INFO7”.

22.5 Language Code Information

This LSI outputs Language Code Information to Status register. (OFFSET=0x1C and 0x1D)

Table 18. shows the Language Code information status register structure.

Table 18. Language Code Information Register Structure

LANGH OFFSET=0x1D	LANGL OFFSET=0x1C	Language Code
0x00	0x00	ID3V1 TAG or ISO8859-1 (ID3V2 TAG)
0x00	0x01	UTF-16 (ID3V2 TAG)
0x00	0x02	UTF-16BE (ID3V2 TAG)
0x00	0x03	UTF-8 (ID3V2 TAG or AAC TAG iTunes Meta-data) *
0x00	0x49	UTF-16LE (WMA TAG) *

*BU94601KV doesn’t support WMA/AAC Tag.

© 2012 ROHM Co., Ltd. All rights reserved.

23. MODE3

MODE3 specifies and plays the file to be played by the master microcomputer by outputting the file/folder status information, written to USB memory or SD memory card, to the master microcomputer.

23.1 Command operation

The LSI sends commands to obtain the file/folder information in USB memory or SD memory card, to analyze ID3Tag, to analyze WMATag, to analyze AACTag, and to set a file to be played and start playing it.
Table 19. shows the commands available in MODE3. When sending a command other than listed below in MODE3, it is ignored.

Table 19. MODE3 Command

Command name	Command byte length	Command			Operation description
		1st	2nd	3rd-	
PAUSE	2	0x50	0x02	-	· When receiving “PAUSE” command during play, the master stops playing file temporarily.
STOP			0x03	-	· This command stops the operations of Tag analysis. · This command stops playing file and stop at top of this file.
VOL+			0x04	-	· When SEL_VOL is set to H, “VOL+” command is enabled. · When receiving “VOL+” command, the master controls sound volume. · Sound volume can be controlled at 32 steps from -∞ (minimum volume) to 0dB (maximum volume).
VOL-			0x05	-	· When SEL_VOL is set to H, “VOL-“command is enabled. · When receiving “VOL-“command, the master controls sound volume. · Sound volume can be controlled at 32 steps from -∞ (minimum volume) to 0dB (maximum volume).
CHNG_DEV			0x08	-	· The command selects the device between USB memory and SD memory card. To do this, both devices should be connected or one device should correspond to the other (USB to SD or SD to USB). Otherwise, this command is ignored. · After selecting the device, the LSI waits for a command.
GET_DIRECT			0x09	-	· This command obtains the folder information (*see 23.3) and file information (*see 23.3) for the folder set by SET_DIRECT. · Read the information using the status commands “READ_FOLDER_INFO” and “READ_FILE_INFO”. · The status of “ANA_END”, “FOLINF”, “FILINF”, “FOLFULL” and “FILFULL” are reset.
GET_NUMBER			0x0A	-	· This command obtains the number of files and folders for the folder set by SET_DIRECT. · Read the information using status command “READ_NUMBER”. · The number of unsupported files is ignored. · The statuses of “ANA_END” are reset.
GET_ID3			0x0B	-	· This command performs TAG analysis for the valid file set by SET_DIRECT. · The command also analyzes even if the folder is not specified. However, at the end of analysis, a status in which Tag information is not contained will be output. - The statuses of “ID3EXIST”, “ID3RSID1” and “ID3RSID2” are reset.

© 2012 ROHM Co., Ltd. All rights reserved.

ABORT			0x0C	-		· This command stops the operations of Tag analysis, folder analysis and file analysis. · The statuses of “ANA_END”, “FOLINF”, “FILINF”, “FOLFULL”, “FILFULL”, "ID3EXIST", "ID3RSID1" and "ID3RSID2" are reset.
PLAY_DIRECT			0x0D	-		· This command starts playing the AAC/WMA/MP3 file set by SET_DIRECT. · The command plays the file even when the preset file is not an supported file or when the folder is specified, the command plays the specified one. If MP3 decode disabled is detected for 5 seconds or longer, the command outputs status "DECO_ERR"=H.
USB_ MNT_READY	4	0x5D	0x0B	0x01	0x00	*Only BU94601KV/BU94603KV · This command prepares for USB device mount. · Be sure to send this command when STATUS turns to USB_INS=H and BUSY=L..
SET_DOUT	4	0x51	0x20	0x00	0x58	· This command outputs digital audio data as I^2S (32fs) format. · When SET_DOUT command is sent, SEL_DOUT terminal setting is ignored
					0x59	· This command outputs digital audio data as I^2S (48fs) format. · When SET_DOUT command is sent, SEL_DOUT terminal setting is ignored
					0x5B	· This command outputs digital audio data as I^2S (64fs) format. · When SET_DOUT command is sent, SEL_DOUT terminal setting is ignored
				0x01	0x01	· This command outputs digital audio data as SPDIF format. · When SET_DOUT command is sent, SEL_DOUT terminal setting is ignored
				0xFF	0x00	· This command stops digital audio output (I^2S, SPDIF). · When SET_DOUT command is sent, SEL_DOUT terminal setting is ignored
SET_NUMBER	6		0x21	0xXX		· This command sets the number of obtained folders for those set by SET_DIRECT. · Parameter: “Number of obtained folders: 2 bytes” + “Number of obtained files: 2 bytes”. By specifying “0”, all the folders and files are obtained.
SET_ RESUME_ INFO1	8	0x51	0x41	RESUME INFO 1byte-6byte		· This command sets byte 1 to 6 of 42-byte data obtained by “READ_RESUME_INFO”.
SET_ RESUME_ INFO2			0x42	RESUME INFO 7byte-12byte		· This command sets byte 7 to 12 of 42-byte data obtained by “READ_RESUME_INFO”.
SET_ RESUME_ INFO3			0x43	RESUME INFO 13byte-18byte		· This command sets byte 13 to 18 of 42-byte data obtained by “READ_RESUME_INFO”.
SET_ RESUME_ INFO4			0x44	RESUME INFO 19byte-24byte		· This command sets byte 19 to 24 of 42-byte data obtained by “READ_RESUME_INFO”.
SET_ RESUME_ INFO5			0x45	RESUME INFO 25byte-30byte		· This command sets byte 25 to 30 of 42-byte data obtained by “READ_RESUME_INFO”.
SET_ RESUME_ INFO6			0x46	RESUME INFO 31byte-36byte		· This command sets byte 31 to 36 of 42-byte data obtained by “READ_RESUME_INFO”.

© 2012 ROHM Co., Ltd. All rights reserved.

SET_ RESUME_ INFO7			0x47	RESUME INFO 37byte-42byte		· This command sets byte 37 to 42 of 42-byte data obtained by “READ_RESUME_INFO”. When RESUME reproduction is possible, play started that music. When RESUME is impossible, play the head music of media is started. · About some kind of setting of Resume Play, see Application Note.
SET_ RESUME_ INFO8			0x48	RESUME INFO 37byte-42byte		· This command sets byte 37 to 42 of 42-byte data obtained by “READ_RESUME_INFO”. When RESUME reproduction is possible, it stops in the music. When RESUME is impossible, it stops at the head of media. · About some kind of setting of Resume Play, see Application Note.
SET_EQ *See Chapter 22.3.	2	0x52	0x00	-		· This command turns OFF EQ setting.
			0x01	-		· POPS
			0x02	-		· JAZZ
			0x03	-		· ROCK
			0x04	-		· CLASSIC
			0x05	-		· R&B
			0x07	-		· This command turns OFF EQ setting.
			0x08	-		· BASS BOOST
			0x09	-		· POPS+BASS
			0x0A	-		· JAZZ+BASS
			0x0B	-		· ROCK+BASS
			0x0C	-		· CLASSIC+BASS
			0x0D	-		· R&B+BASS
			0x0F	-		· BASS BOOST2
SET_VOL		0x53	Setting value	-		· Set sound volume the second byte value of the command. The setting values are 32 steps ranging from 0x00 to 0x1F. · A value specified outside the above range will be ignored.
FFP_ON	4	0x55	0x01	0x02	0x00	. Start the fast-forwarding playback from a present playback position by this command of playbacking and pausing.
FFP_OFF				0x03	0x00	. Stop the fast-forwarding playback by this command fast-forwarding playback, and usually playback.
FBP_ON			0x02	0x02	0x00	. Start the rewinding playback from a present playback position by this command of playbacking and pausing.
FBP_OFF				0x03	0x00	. Stop the rewinding playback by this command rewinding playback, and usually playback.
SEL_12MOUT	2	0x58	0x00	-		· This command stops 12 MHz clock output from CLKOUT12 terminal.
			0x01	-		· This command enables 12 MHz clock output from CLKOUT12 terminal.
SET_DIRECT	8	0x59	0x00	0xXX		· This command specifies the current position of the folder/file by specifying the folder/file information access data (6 bytes). · Specify access data (6 bytes) at 0xXX. · By specifying “0”, the position is set to the root folder.
SET_WDT	2	0x5A	0x00	-		· This command stops Watch Dog Timer.
			0x01	-		· This command writes “1” to STATUS WDT_RFLG.

© 2012 ROHM Co., Ltd. All rights reserved.

SET_RPM	6	0x5B	0x00	setting		· This command set up playtime and skiptime for fast forward playing and fast backward playing. Fast forward and fast backward playing repeat this cycle by making {playtime(M) + skiptime(N) +error(O)} into 1 cycle. With an error, it depends on the cajoled error between the minimum decoding unit and playtime, and the real time which searches skiptime. Errors differ by every file and every composition in memory. · This command set up that playtime is M[15:0]=[4th byte, 3rd byte] and skiptime are N[15:0]=[6th byte and 5th byte]. Initial value set playtime is 300 mili second=M[15:0]=[4 th byte=x01, 3rd byte=x2C] and skiptime is 2100 mili second=N[15:0]=[6 th byte=x08, 5 th byte=x34]. When command set up to 0x0, setting value is initial value. The playtime should set up 300ms or more, and skiptime should set up below (playtime x16).
SET_RPM_ATT	4	0x5B	0x01	setting	0x00	· This command set up the attenuation level under fast forward and backward playing. An attenuation level serves as (-6dB X [3rd byte]). A setup can be specified from 0x00 to 0x10.As for an initial value, 0x02=-12dB is set up. It becomes equivalent to MUTE by setup of 0x10.
SET_ UPLOAD_FILE1	8	0x51	0x51	NAME[0:5]		Specify the part of the first half of the file name of the file for File Read Function. *Bury it by 0x20 when the file name(NAME) doesn't come up to eight bytes.
SET_ UPLOAD_FILE2	8	0x51	0x52	NAME[6:7] EXT[0:2]		Specify the part of the latter half of the file name of the file for File Read Function. *Bury it by 0x20 when the file name(NAME) doesn't come up to eight bytes. Bury it by 0x00 when the file extension doesn't come up to three bytes. It targets neither the file name comparison since 0x00 of the end in the comparison.
UPLOAD_END	2	0x51	0x53	-	-	The File Read function is ended. Transmit after completing the file reading.
SET_TOUT_M	4	0x5D	0x07	0xYY	0xXX	The ACK timeout of the command under memory mount is set up. The set point x100 (msec) is timeout. At the time, XX is upper byte and YY is lower byte. An initial value is 30 sec (YY=0x2C, XX=0x01), and maximum value is 60 sec (YY=0x58, XX=0x02).If set point is over the maximum value, this command is ignored. Mount ERROR will be carried out if a timeout occur.
SET_TOUT_C	4	0x5D	0x08	0xYY	0xXX	The ACK timeout of the commands at the time of PLAY or STOP or PAUSE (except during mount) is set up. The set point x100 (msec) is timeout. At the time, XX is upper byte and YY is lower byte. An initial value is 5 sec (YY=0x32, XX=0x00), and maximum value is 60 sec (YY=0x58, XX=0x02). If set point is over the maximum value, this command is ignored. Communication ERROR will be carried out if a timeout occur.
SET_USB_ R_WAIT	4	0x5D	0x09	0xXX	0x00	The wait time after bus reset is set up at the time of USB memory recognition. The set point (XX) x200 (msec) is wait time. An initial value is 600 msec (XX=0x03), and maximum value is 51.2 sec (XX=0xFF).

© 2012 ROHM Co., Ltd. All rights reserved.

GET_ VENDOR	2	0x5F	0x16	-	-	A vendor code and Product ID are stored in COMAREA. Please read COMAREA after GET_VENDOR command transmission and acquire code data. Offset 0x20：Vendor code Lower byte 0x21：Vendor code Upper byte 0x22：Product code Lower byte 0x23：Product code Upper byte
FORCE_ DISCON_USB	2	0x5D	0x02	-	-	Force mounted USB memory to be disconnected.
FORCE_ CON_USB	2	0x5D	0x0A	-	-	Mounts USB memory again, which Mount ERROR occurred.
FORCE_ DISCON_SD	4	0x5D	0x0C	0x01	0x00	Force SD memory to be disconnected, which Mount ERROR occurred
FORCE_ CON_SD	4	0x5D	0x0C	0x00	0x00	Mounts SD memory again, which was disconnected by FORCE_DISCON_SD command.
SET_LUN	4	0x5D	0x0D	setting	0x00	LUN, which USB memory mounts, is specified. LUN specified at the time of USB connection mounts. When another LUN is already mounted, it re-mounts to specified LUN. When not specifying LUN, effective LUN becomes an AUTO setup and LUN detected first is mounted at the time of USB memory connection. (Initial value)
RESET_LUN	2	0x5D	0x0E	-	-	Effective LUN is set to AUTO and LUN detected first comes to be mounted at the time of USB memory connection.

© 2012 ROHM Co., Ltd. All rights reserved.

Table 20. Command Enabled/Disabled in Various Statuses

	After recognizing device		* Analyzing	During play of device		Searching	Error	
	Recognize either USB or SD	Recognize both USB and SD		Recognize either USB or SD	Recognize both USB and SD		Recognize either USB or SD	Recognize both USB and SD
PAUSE	×	×	×	○	○	×	×	×
STOP	×	×	×	○	○	○	×	×
VOL+	○	○	×	○	○	×	○	○
VOL-	○	○	×	○	○	×	○	○
CHNG_DEV	×	○	×	×	○	×	×	○
GET_DIRECT	○	○	×	×	×	×	×	×
GET_NUMBER	○	○	×	×	×	×	×	×
GET_ID3	○	○	×	×	×	ー	×	×
ABORT	×	×	○	×	×	○	×	×
PLAY_DIRECT	○	○	×	×	×	×	×	×
USB_MNT_READY	○	○	×	○	○	○	○	○
SET_DOUT	○	○	×	○	○	×	○	○
SET_NUMBER	○	○	×	×	×	×	×	×
SET_RESUME_ INFO1-7	○	○	×	○	○	×	×	×
SET_EQ	○	○	×	○	○	×	○	○
SET_VOL	×	×	×	○	○	×	○	○
FFP_ON	×	×	×	○	○	×	×	×
FFP_OFF	×	×	×	○	○	×	×	×
FBP_ON	×	×	×	○	○	×	×	×
FBP_OFF	×	×	×	○	○	×	×	×
SEL 12MOUT	○	○	×	○	○	×	○	○
SET_DIRECT	○	○	×	×	×	×	×	×
SET_WDT	○	○	×	○	○	×	○	○
SET_RPM	○	○	×	○	○	×	×	×
SET_RPM_ATT	○	○	×	○	○	×	×	×
SET_UPLOAD_FILE1	After recognizing the USB memory, only the halt condition is the command effective.							
SET_UPLOAD_FILE2								
UPLOAD_END								
SET_TOUT_M	○	○	×	○	○	×	○	○
SET_TOUT_C	○	○	×	○	○	×	○	○
SET_USB_RWAIT	○	○	×	○	○	×	○	○
GET_VENDOR	○	○	×	○	○	×	○	○
FORCE_ DISCON_USB	○	○	○	○	○	○	×	×
FORCE_CON_USB	×	×	×	×	×	×	○	○
FORCE_DISCON_SD	×	×	×	×	×	×	○	○
FORCE_CON_SD	×	×	×	×	×	×	○	○
SET_LUN	○	○	×	○	○	×	○	○
RESET_LUN	○	○	×	○	○	×	○	○

○ = Enabled × = Disabled

* Analyzing shows the File/Folder information is being obtained after GET_DIRECT command is transmitted.

© 2012 ROHM Co., Ltd. All rights reserved.

23.2 Status output

The LSI outputs the operation information, such as internal status, play time information, folder information, file information ID3Tag information, AACTag information, and WMATag information, using the I²C interface.
The statuses as shown in Table 21. MODE3 status register map are output. There are two methods available: to read a desired number of bytes continuously from the OFFSET position and to read the data by one command without specifying the OFFSET position. Figure 23. shows the status output commands.
Table 23 shows the enabled/disabled state of the status commands.
The status register has a ring buffer structure of OFFSET 0x00-0x7F. The OFFSET position is automatically incremented after reading byte data.
Status register outputs a byte data of OFFSET 0x00-0x7F by "Little Endian" format. (Exception exists when using READ_ID3_TITLE, READ_ID3_ARTIST, and READ_ID3_ALBUM command. See Table 22. MODE3 Status Output Commands)

Table 21. MODE3 Status Output

Offset	Status	bit7 (MSB)	bit6	bit5	bit4	bit3	bit2	bit1	bit0 (LSB)
0x00	STATUS1	ERROR 0: No error 1: Error occurs	SEARCH 0: Search stop 1: Searching	0	0	DEC_ERR 0: No error 1: Error occurs	STOP 0: Not stopped 1. Stopping	PAUSE 0: Not paused 1: Pausing	Play 0: Not played 1: Playing
0x01	STATUS2	USBINS 0: USB not connected 1: USB connection detected	SDINS 0: SD not connected 1: SD connection detected	USBFILE Playable file within USB memory 0: Absent 1: Present	SDFILE Playable file within SD memory 0: Absent 1: Present	MDEVUSB USB memory 0: Not recognized 1: Recognized	MDEVSD SD memory 0: Not recognized 1: Recognized	PDEVUSB PDEVUSB USB memory 0: Stopping 1: Playing/ID3Tag analyzing	PDEVSD PDEVUSB SD memory 0: Stopping 1: Playing/ID3Tag analyzing
0x02	STATUS3	BUSY Command Busy 0: Not BUSY 1: BUSY	MCHNG Tune number change detection 0: Tune ended/stopped 1: Playing	0	ID3EXIST TAG information 0: Not exist 1. Exist	ID3RSID1 ID3Tag Version1 0: Absent 1: Present	ID3RSID2 ID3Tag Version2 0: Absent 1: Present	0	0
0x03	STATUS4	ANAEND 0: Analyzing 1: Analysis completed	FOLINF Folder information 0: Absent 1: Present	FOLFULL Folder buffer 0: Not FULL 1: FULL	FILEINF Folder information 0: Absent 1: Present	FILEFULL Folder buffer 0: Not FULL 1: FULL	0	0	0
0x04	STATUS5	12MOUT 12 MHz clock output 0: OFF 1: ON	WDT_RFLG 0:after RESET	WMAPLAY Play file information 0: MP3 1: WMA , 2: AAC 3:Device with 2 configurations or more		FBP Fast backward playing 0: OFF 1: ON	FFP Fast forward playing 0: OFF 1: ON	0	RES_ERR Resume error 0: No error 1: Error occurs
0x05	VOLINF	0	0	0	VOLINF Sound volume information [4: 0]				
0x06	EQINF	EQINF Equalizer setting information 0000: OFF 0001: POPS 0010: JAZZ 0011: ROCK 0100: CLASSIC 0101: R&B 1000: BASS BOOST 1001: POPS+BASS 1010: JAZZ+BASS 1011: ROCK+BASS 1100: CLASSIC+BASS 1101: R&B+BASS 1111 BASS BOOST2				0	0	0	0
0x07	PRECOM	PRECOM Previous Command information 0: normal 1: miss							
0x08	DOUT	HUB Detection Flag 0: Not Detection 1: Detection	Un Support device Detection Flag 0: Not Detection 1: Detection	Vendor code Detection Flag 0: Apple Not Detection 1: Apple Detection	0	0	0	0	DOUT Audio output 0: LINE output 1: I2S / SPDIF

© 2012 ROHM Co., Ltd. All rights reserved.

0x09	DOUTINF	DOUTINF I2S format status 0x58: 32fs(Initial value) 0x59: 48fs 0x5B: 64fs	
0x0A	PFOLNL	00h	
0x0B	PFOLNH	00h	
0x0C	PFILENL	00h	
0x0D	PFILENH	00h	
0x0E	PSEC	Playing time second information [7:4]x10 second.	Playing time second information [3:0]x1second.
0x0F	PMIN	Playing time minute information [7:4]x10 min.	Playing time minute information [3:0]x1 min.
0x10	TFOLL	TFOLL Current folder total folder number lower-order byte [7:0]	
0x11	TFOLH	TFOLH Current folder total folder number upper-order byte [15:8]	
0x12	TFILEL	TFILEL Current folder total file number lower-order byte [15:0] [7:0]	
0x13	TFILEH	TFILEH Current folder total file number upper-order byte [15:0] [15:8]	
0x14	RESFOLL	RESFOLL Remaining analysis folder number lower-order byte [7:0]	
0x15	RESFOLH	RESFOLH Remaining analysis folder number upper-order byte [15:8]	
0x16	RESFILEL	RESFILEL Remaining analysis file number lower-order byte [7:0]	
0x17	RESFILEH	RESFILEH Remaining analysis file number upper-order byte [15:8]	
0x18	SETFOLL	SETFOLL Folder acquisition setting value lower-order byte [7:0]	
0x19	SETFOLH	SETFOLH Folder acquisition setting value upper-order byte [15:8]	
0x1A	SETFILEL	SETFILEL File acquisition setting value lower-order byte [7:0]	
0x1B	SETFILEH	SETFILEH File acquisition setting value upper-order byte [15:8]	
0x1C	LANGL	LANGL Language code information lower -order byte [7:0]	
0x1D	LANGH	LANGH Language code information upper -order byte [15:8]	
0x20 | 0x7F	COMAREA	COMAREA Data common area The content varies depending on the status read command.	

* Play file information: The value is 0 when BU94601KV. “3: Device with 2 configurations or more” is supported only by BU94604BKV.

© 2012 ROHM Co., Ltd. All rights reserved.

Table 22. MODE3 Status Output Commands

Command name	Command		Status output bytes	Status
	1st byte	2nd byte		
READ_BUFF	0x5E	OFFSET	Optional	· This command outputs the specified OFFSET byte data from status buffer.
READ_STATUS	0x5F	0x00	5	· This command outputs OFFSET 0x00-0x04 of status buffer.
READ_PLAY_INFO		0x01	6	· This command outputs OFFSET 0x0A-0x0F of status buffer.
READ_VOL		0x02	1	· This command outputs OFFSET 0x05 of status buffer.
READ_EQ		0x03	1	· This command outputs OFFSET 0x06 of status buffer.
READ_ID3_TITLE		0x04	64	· This command outputs the data of Tag Title. *1
READ_ID3_ARTIST		0x05	64	· This command outputs the data of Tag Artist. *1
READ_ID3_ALBUM		0x06	64	· This command outputs the data of Tag Album. *1
READ_FILE_NAME		0x07	64	· This command outputs the data of playing file name. see 20.4
READ_FOLDER_NAME		0x08	64	· This command outputs the data of folder name includes playing AAC/WMA/MP3 file. see 20.4
READ_RESUME_INFO		0x09	42	. Acquire RESUME information in this command while being playbacking or pausing. . Set the data acquired in this command as it is when setting RESUME information by "SET_RESUME_INFO1-7".
READ_NUMBER		0x0A	4	· This command outputs OFFSET 0x10-0x13 of status buffer.
READ_REST_NUM		0x0B	4	· This command outputs OFFSET 0x14-0x17 of status buffer.
READ_SET_NUM		0x0C	4	· This command outputs OFFSET 0x18-0x1B of status buffer.
READ_FOLDER_INFO		0x0D	76	· This command outputs the result of folder analysis by "GET_DIRECT" command. see 23.3.
READ_FILE_INFO		0x0E	76	· This command outputs the result of file analysis by "GET_DIRECT" command. see 23.3.
READ_CLAS		0x0F	4	· This command outputs the data of file cluster number. Use to check file when "PLAY_DIRECT".
READ_VERSION		0x10	1	· This command outputs the data of Firmware version.
READ_FILE_SIZE		0x11	4	· The size of a specified file of the File Read function is acquired. It outputs With ittleEndian. · When the file doesn't exist, "0xFF, 0xFF, 0xFF, and 0xFF" is output.
READ_FILE_DATA		0x12	96	· The file data of a specified file of the File Read function is read. · The 92byte data reading is possible by one time. · Four head bytes are file offsets. It outputs with LittleEndian.

© 2012 ROHM Co., Ltd. All rights reserved.

READ_LUN		0x17	1	· In case of AUTO detection mode of LUN, LUN of mounted USB memory can beread. · If LUN is specified using the "SET_LUN" command, specified LUN of mounted USB memory can be read. But if failed to mount, 0xFF is read. · Attention) When memory connected to multi-card reader is removed or re-inserted, LUN read by this command is NOT correct until mount of re-inserted media is completed.
READ_LUN_NUM		0x18	1	· Read the total of LUN of the USB memory which is connected now.
READ_SET_LUN		0x19	1	· Read LUN specified by the "SET_LUN" command. In not setting up, 0xFF is read.

*1 : BOM(Byte Order Mark) might enter two head bytes according to ID3 data. Status register outputs byte data by "Big Endian" format when WMA tag reading.

© 2012 ROHM Co., Ltd. All rights reserved.

Table 23.

	After recognizing device	*1 Analyzing	During play of device	Searching	Error
READ_BUFF	○	○	○	○	○
READ_STATUS	○	○	○	○	○
READ_PLAY_INFO	○	×	○	×	○*2
READ_VOL	○	×	○	×	○
READ_EQ	○	×	○	×	○
READ_ID3_TITLE	○	×	○	×	×
READ_ID3_ ARTIST	○	×	○	×	×
READ_ID3_ALBUM	○	×	○	×	×
READ_FILE_NAME	○	×	○	×	×
READ_FOLDER_NAME	○	×	○	×	×
READ_RESUME_INFO	○	×	○	×	×
READ_NUMBER	○	×	×	×	×
READ_REST_NUM	○	×	×	×	×
READ_SET_NUM	○	×	×	×	×
READ_FOLDER_INFO	○	×	×	×	×
READ_FILE_INFO	○	×	×	×	×
READ_CLAS	○	×	×	×	×
READ_VERSION	○	×	×	×	×
READ_FILE_SIZE	After recognizing the USB memory, only the halt condition is the command effective.				
READ_FILE_DATA					
READ_LUN	○	×	○	×	○
READ_LUN_NUM	○	×	○	×	○
READ_SET_LUN	○	×	○	×	○

○ = Enabled × = Disabled
*1 Analyzing shows the File/Folder information is being obtained after GET_DIRECT command is transmitted.
*2"READ_PLAY_INFO" command when an error occurs can be received.
However, status output may not send correct data.

© 2012 ROHM Co., Ltd. All rights reserved.

23.3 Folder information/File information

For analysis performed by “GET_DIRECT” command, read 76 bytes from the status register “COMAREA (0x20-0x6B)” using status commands “READ_FOLDER_INFO” and “READ_FILE_INFO”. Each of the status register structures when “READ_FOLDER_INFO” and “READ_FILE_INFO” are sent is shown below.

(1) Folder information

When the folder is specified using “SET_DIRECT”, the LSI allows you to fetch the folder information in the specified folder from the memory device at “GET_DIRECT” and read folder information using “READ_FOLDER_INFO”.

Table 24. shows the status register structure.

Table 24. Folder Information Register Structure

Status OFFSET	Folder information
0x20-0x25	Access data [6 bytes]
0x26-0x27	Reserve [2 bytes]
0x28-0x2B	Cluster number [4 bytes]
0x2C-0x6B	Folder name [64 bytes]

i. Access data : Shows the position where the folder information is written in the memory.
ii. Reserve : All “0s” are output.
iii. Cluster number : Shows the cluster number where the folder information is written in the memory.
iv. Folder name : Outputs the folder name from the leftmost position.

(2) File information

When the folder is specified using “SET_DIRECT”, the LSI allows you to fetch the file information in the specified folder from the memory device at “GET_DIRECT” and read file information using “READ_FILE_INFO”.

Table 25. shows the status register structure.

Table 25. File Information Register Structure

Status OFFSET	File information
0x20-0x25	Access data [6 bytes]
0x26	Judge file type[1 bytes] *
0x27	Reserve [1bytes]
0x28-0x2B	Cluster number [4 bytes]
0x2C-0x6B	File name [64 bytes]

i.Access data : Shows the position where the file information is written in the memory.
ii. Judge file type : Output “0” when play MP3 file, output “1” when play WMA file, output “2” when play AAC file.
iii. Reserve : All “0s” are output.
iv. Cluster number : Shows the cluster number where the file information is written in the memory.
v. File name : Outputs the file name from the leftmost position.

* “Reserve [1bytes]” when BU94601KV.

23.4 Language Code Information

This LSI outputs Language Code Information to Status register. (OFFSET=0x1C and 0x1D)
See Chapter 22.5.

© 2012 ROHM Co., Ltd. All rights reserved.

24. Watchdog Timer

This system builds Watchdog timer(WDT) function.

After RESET, WDT function is enabled on MODE1, MODE2 and MODE3. WDT is enabled always on MODE1. On MODE2 and MODE3, WDT function can disable by command “SET_WDT”(0x5A,0x00). After WDT function is disabled, this function cannot enable until a reset from external pin.

When WDT function is enabled and system is hang-up, Watchdog Timer function generates RESET.

When you want to watch RESET of WDT from master micro controller, write command “SET_WDT”(0x5A,0x01). After write command “SET_WDT”(0x5A,0x01), status “WDT_RFLG” is “1”.

“WDT_RFLG” is bit6 of STATUS5(offset;x04). This status is “0” after RESET. Therefore, when this status returned to “0” from “1”, this system generated a reset.

25. IRPTO (Only BU94604BKV)

The device can be controlled about MODE2 and 3 about the device where two CONFIGURATION or more is detected at USB device connection Enumeration by the following commands.

25.1 Command operation

As for the command specification that can be used, it is table VII. It shows in 6.1.

Table 26. Command operation explanation

Command name	Command								bmRequestType	bRequest	wValue	wIndex	wLength
	1st	2nd	3rd	4th	5th	6th	7th	8th	Explanation				
GET_DESCRIPTOR	0x5C	0x00	0x00	0x00	—*1	—	—	—	0x80	0x06	0x0100	0x0000	0x0008
									Acquire the size of the device descriptor.				
			0x01	Set value	—	—	—	—	0x80	0x06	0x0100	0x0000	Set value
									Acquire the descriptor of the number of bytes for a set value.				
GET_CONFIG		0x01	0x00	Set value	—	—	—	—	0x80	0x06	0x02_ Set value	0x0000	0x0008
									Acquire the size of the configuration descriptor of the index of a set value.				
			0x01	Set value 1	Set value 2	—	—	—	0x80	0x06	0x02_ Set value 1	0x0000	Set value 2
									Acquire the configuration descriptor of the block of set value 2(one block 96 bytes) of the index of set value 1.				
SET_CONFIG		0x01	0x02	Set value	—	—	—	—	0x00	0x09	Set value	0x0000	0x0000
									Set it to the configuration of a set value. *2				
GET_STRING		0x02	0x00	0x00	0x00	0x00	—	—	0x80	0x06	0x0300	0x0000	0x0040
									Acquire language ID.				
				Set value 1	Set value 2	Set value 3	—	—	0x80	0x06	0x03_ Set value 1	Set value 2_3	0x0040
									Acquire the size of the string of the index of setting 1 of languages ID of set values 2 and 3.				
			0x01	Set value 1	Set value 2	Set value 3	Set value 4	—	0x80	0x06	0x03_ Set value 1	Set value 3_4	Set value 2
									Acquire the string of the size of index and set value 2 of set value 1 of languages ID of set values 3 and 4.				

© 2012 ROHM Co., Ltd. All rights reserved.

SET_DEVICE	0x5C	0x03	EP/IO	Type	wMaxPkt Lo byte	wMaxPkt Hi byte	bInterval	–	End point descriptor setting EP/IO ： D7（1：IN、0：OUT)、 D3-D0（Endpoint) Type ： 0x00(Control transfer)、 0x01（Isochronous transfer)、0x02（Bulk transfer)、0x03（Interrupt transfer) wMaxPkt ： Supported size of the maximum packet bInterval ： Polling interval *Begin polling on interrupt IN forwarding after it sets it.				
GET_HID_ REPORT		0x04	wValue Lo byte	wValue Hi byte	wIndex Lo byte	wIndex Hi byte	wLength Lo byte	wLength Hi byte	0x81	0x06	wVlaue	wIndex	wLength
									Acquire the HID report descriptor. *2				
SET_HID_ REPORT		0x05	wValue Lo byte	wValue Hi byte	wIndex Lo byte	wIndex Hi byte	wLength Lo byte	wLength Hi byte	0x21	0x09	wVlaue	wIndex	wLength
									SET_REPORT request command setting for HID class device.				
		0x06	0xN (N=0x01 to 0x0D)	DATA (N-1)*5	DATA (N-1)*5+1	DATA (N-1)*5+2	DATA (N-1)*5+3	DATA (N-1)*5+4	Data setting at SET_REPORT request command for HID class device.				
		0x06	0x0E	0x00	0x00	0x00	0x00	0x00	Transmission of SET_REPORT request command for HID class device. The SET_HID_REPORT command is completed by transmitting this command. *2				
GET_INT		0x07	0x00	0x00	–	–	–	–	Acquire the interrupt forwarding receive data.				
			0x01	0x00	–	–	–	–	Acquire the reception byte of HID REPORT. The reception byte acquires the size of the report acquired in HID_Report_Descriptor. An effective actual data size becomes below this size.				
SET_MASST		0x08	0x00	0x00	–	–	–	–	Transmit this command when you connect the connected device as a mass storage class device.				
SET_ISO_ START		0x09	0x00	0x00	–	–	–	–	Begin the isochronous IN forwarding data reproduction.				
SET_ISO_ STOP			0x01	0x00	–	–	–	–	Stop the isochronous IN forwarding data reproduction.				
SET_FS		0x0A	Set value	0x00	–	–	–	–	Change the sample rate. 0x00：32kHz、0x01：44.1kHz、0x02：48kHz				
GET_REPORT		0x0B	Set value	0x00	–	–	–	–	Acquire the report data of the block of a set value.				
SET_ INTERFACE		0x0C	wValue Lo byte	wValue Hi byte	wIndex Lo byte	wIndex Hi byte	–	–	0x01	0x0B	wValue	wIndex	0x0000
									Switch wValue to the interface of wIndex.				
SET_ VENDOR		0xFE	0x00	Set value 1	Set value 2	wValue Lo byte	wValue Hi byte	–	Set value 2	Set value 1	wVlaue	wIndex	wLength
			0x01	wIndex Lo byte	wIndex Hi byte	wLength Lo byte	wLength HI byte	–	USB device request.				
		0xFF	0xN (N=0x01 to 0x0D)	DATA (N-1)*5	DATA (N-1)*5+1	DATA (N-1)*5+2	DATA (N-1)*5+3	DATA (N-1)*5+4	Data setting for USB device request.				
			0x0E	0x00	0x00	0x00	0x00	0x00	Data transmission for USB device request. *2				

*1 ： The transmission of "－" is unnecessary.
*2 ： After confirming BUSY status L output, wait of 3ms is necessary when the command transmission is done.

© 2012 ROHM Co., Ltd. All rights reserved.

●Notes for use

(1)Power on Reset
Please keep the terminal RESETX at the Low level when the power supply starts. Please make the terminal RESETX High level after 5us after 3.3V system power supply and the oscillation of the system clock is steady. Moreover, please make the terminal RESETX Low level during 5us or more when resetting it while operating.

(2) About compatibility in USB memory device and SD memory card
According to the file structure and communication speed of an USB memory, SD memory card, this LSI might not play back correctly.

(3) About turning on the power supply
Current rush might flow momentarily by the order of turning on the power supply and the delay in IC with two or more power supplies, and note the capacity of the power supply coupling, the power supply, and width and drawing the GND pattern wiring.

(4) About absolute maximum rating
When the absolute maximum rating such as the applied voltage and the ranges of the operating temperature is exceeded, LSI might be destroyed. Please apply neither voltage nor the temperature that exceeds the absolute maximum rating. Please execute physical measures for safety such as fuse when it is thought to exceed the absolute maximum rating, and examine it so that the condition to exceed the absolute maximum rating is not applied to LSI.

(5) About GND Voltage
In any state of operation must be the lowest voltage about the voltage of the terminal GND. Please actually confirm the voltage of each terminal is not a voltage that is lower than the terminal GND including excessive phenomenon.

(6) About design of overheating malfunction preventive circuit
Please design overheating malfunction preventive circuit with an enough margin in consideration of a permissible loss in the state of using actually.

(7) About the short between terminals and the mounting by mistake
Please note the direction and the gap of position of LSI enough about LSI when you mount on the substrate.
LSI might be destroyed when mounting by mistake and energizing. Moreover, LSI might be destroyed when short-circuited
by entering of the foreign substances between the terminal and GND, between terminals, between the terminal and the power supply of LSI.

(8) About operation in strong electromagnetic field
Use in strong electromagnetic field has the possibility of malfunctioning and evaluate it enough, please.

(9) Playing time of MP3 file
The playing time when it can be acquired at the time of playing the MP3 file, may shift when fast forward playing, rewinding playing, and VBR playing.

(10) About WMA
Windows Media Audio is the music compression technology which Microsoft Corp. developed.
Windows Media is the registered trademark of U.S. Microsoft Corporation in the U.S., and other countries.

(11) About I^2C format I/F
Although this LSI has adopted the I^2C format, the level shifter circuit is not built in.
For this reason, level shifter is needed for connection with the device besides the range of operating power supply voltage of this LSI.

(12) About " Made for iPod / iPhone / iPad License "
For using of BU94604BKV, It is necessary to become a licensee of Apple Inc. regarding "Made for iPod/iPhone/iPad License"

Status of this document
The Japanese version of this document is the formal specification. A customer may use this translation version only for a reference to help reading the formal version. If there are any differences in translation version of this document, formal version takes priority.

© 2012 ROHM Co., Ltd. All rights reserved.

●Information about ordering part number

B	U	9	4	6	0	x	x	K	V	-	x	x	x	x

Part Number
BU94601KV (MP3 support)
BU94603KV (AAC/WMA/MP3 support)
BU94604BKV (AAC/WMA/MP3 + iPod support)

Package
KV: VQFP64

Packaging and forming specification
ZAE2: Reel-formed emboss taping
None: Tray, Tube

●External dimension

BU94601KV/BU94603KV/BU94604BKV (VQFP64)

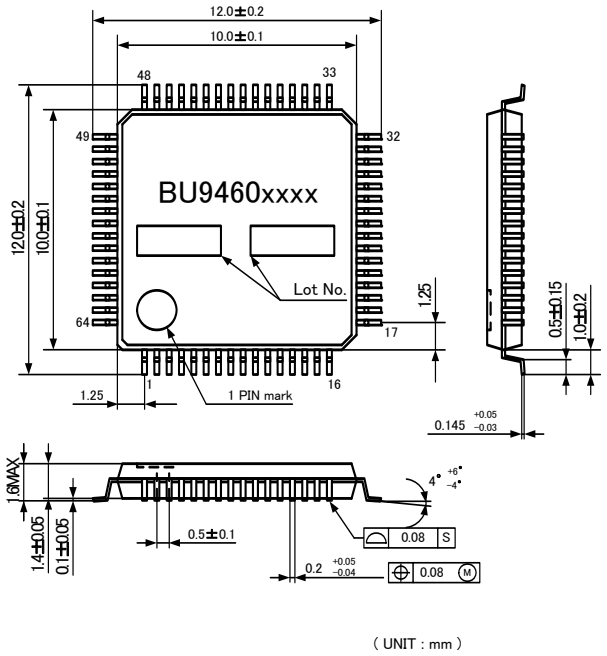

●Mark name image

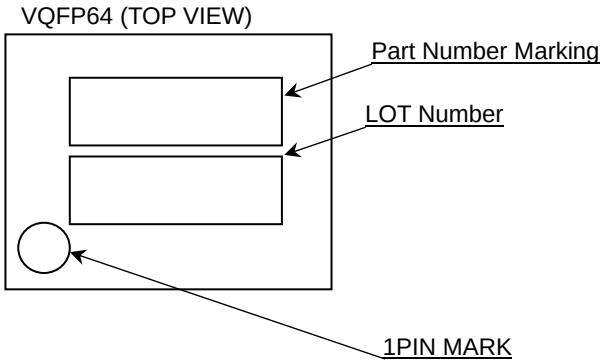

Part number	Part Number Marking	Ordering part number
BU94601KV	BU94601KV	BU94601KV-ZAE2
BU94603KV	BU94603KV	BU94603KV-ZAE2
BU94604BKV	BU94604BKV	BU94604BKV-ZAE2

© 2012 ROHM Co., Ltd. All rights reserved.

●**Revision history**

Date	Revision	Changes
12.Jul.2012	001	New Release

© 2012 ROHM Co., Ltd. All rights reserved.

Notice

Precaution on using ROHM Products

1. Our Products are designed and manufactured for application in ordinary electronic equipments (such as AV equipment, OA equipment, telecommunication equipment, home electronic appliances, amusement equipment, etc.). If you intend to use our Products in devices requiring extremely high reliability (such as medical equipment (Note 1), transport equipment, traffic equipment, aircraft/spacecraft, nuclear power controllers, fuel controllers, car equipment including car accessories, safety devices, etc.) and whose malfunction or failure may cause loss of human life, bodily injury or serious damage to property ("Specific Applications"), please consult with the ROHM sales representative in advance. Unless otherwise agreed in writing by ROHM in advance, ROHM shall not be in any way responsible or liable for any damages, expenses or losses incurred by you or third parties arising from the use of any ROHM's Products for Specific Applications.

(Note1) Medical Equipment Classification of the Specific Applications

JAPAN	USA	EU	CHINA
CLASSⅢ	CLASSⅢ	CLASSⅡb	CLASSⅢ
CLASSⅣ		CLASSⅢ	

2. ROHM designs and manufactures its Products subject to strict quality control system. However, semiconductor products can fail or malfunction at a certain rate. Please be sure to implement, at your own responsibilities, adequate safety measures including but not limited to fail-safe design against the physical injury, damage to any property, which a failure or malfunction of our Products may cause. The following are examples of safety measures:
   [a] Installation of protection circuits or other protective devices to improve system safety
   [b] Installation of redundant circuits to reduce the impact of single or multiple circuit failure

3. Our Products are designed and manufactured for use under standard conditions and not under any special or extraordinary environments or conditions, as exemplified below. Accordingly, ROHM shall not be in any way responsible or liable for any damages, expenses or losses arising from the use of any ROHM's Products under any special or extraordinary environments or conditions. If you intend to use our Products under any special or extraordinary environments or conditions (as exemplified below), your independent verification and confirmation of product performance, reliability, etc, prior to use, must be necessary:
   [a] Use of our Products in any types of liquid, including water, oils, chemicals, and organic solvents
   [b] Use of our Products outdoors or in places where the Products are exposed to direct sunlight or dust
   [c] Use of our Products in places where the Products are exposed to sea wind or corrosive gases, including Cl_2, H_2S, NH_3, SO_2, and NO_2
   [d] Use of our Products in places where the Products are exposed to static electricity or electromagnetic waves
   [e] Use of our Products in proximity to heat-producing components, plastic cords, or other flammable items
   [f] Sealing or coating our Products with resin or other coating materials
   [g] Use of our Products without cleaning residue of flux (even if you use no-clean type fluxes, cleaning residue of flux is recommended); or Washing our Products by using water or water-soluble cleaning agents for cleaning residue after soldering
   [h] Use of the Products in places subject to dew condensation

4. The Products are not subject to radiation-proof design.

5. Please verify and confirm characteristics of the final or mounted products in using the Products.

6. In particular, if a transient load (a large amount of load applied in a short period of time, such as pulse. is applied, confirmation of performance characteristics after on-board mounting is strongly recommended. Avoid applying power exceeding normal rated power; exceeding the power rating under steady-state loading condition may negatively affect product performance and reliability.

7. De-rate Power Dissipation (Pd) depending on Ambient temperature (Ta). When used in sealed area, confirm the actual ambient temperature.

8. Confirm that operation temperature is within the specified range described in the product specification.

9. ROHM shall not be in any way responsible or liable for failure induced under deviant condition from what is defined in this document.

Precaution for Mounting / Circuit board design

1. When a highly active halogenous (chlorine, bromine, etc.) flux is used, the residue of flux may negatively affect product performance and reliability.

2. In principle, the reflow soldering method must be used; if flow soldering method is preferred, please consult with the ROHM representative in advance.

For details, please refer to ROHM Mounting specification

© 2014 ROHM Co., Ltd. All rights reserved.

Precautions Regarding Application Examples and External Circuits

1. If change is made to the constant of an external circuit, please allow a sufficient margin considering variations of the characteristics of the Products and external components, including transient characteristics, as well as static characteristics.

2. You agree that application notes, reference designs, and associated data and information contained in this document are presented only as guidance for Products use. Therefore, in case you use such information, you are solely responsible for it and you must exercise your own independent verification and judgment in the use of such information contained in this document. ROHM shall not be in any way responsible or liable for any damages, expenses or losses incurred by you or third parties arising from the use of such information.

Precaution for Electrostatic

This Product is electrostatic sensitive product, which may be damaged due to electrostatic discharge. Please take proper caution in your manufacturing process and storage so that voltage exceeding the Products maximum rating will not be applied to Products. Please take special care under dry condition (e.g. Grounding of human body / equipment / solder iron, isolation from charged objects, setting of Ionizer, friction prevention and temperature / humidity control).

Precaution for Storage / Transportation

1. Product performance and soldered connections may deteriorate if the Products are stored in the places where:
   [a] the Products are exposed to sea winds or corrosive gases, including Cl2, H2S, NH3, SO2, and NO2
   [b] the temperature or humidity exceeds those recommended by ROHM
   [c] the Products are exposed to direct sunshine or condensation
   [d] the Products are exposed to high Electrostatic

2. Even under ROHM recommended storage condition, solderability of products out of recommended storage time period may be degraded. It is strongly recommended to confirm solderability before using Products of which storage time is exceeding the recommended storage time period.

3. Store / transport cartons in the correct direction, which is indicated on a carton with a symbol. Otherwise bent leads may occur due to excessive stress applied when dropping of a carton.

4. Use Products within the specified time after opening a humidity barrier bag. Baking is required before using Products of which storage time is exceeding the recommended storage time period.

Precaution for Product Label

QR code printed on ROHM Products label is for ROHM's internal use only.

Precaution for Disposition

When disposing Products please dispose them properly using an authorized industry waste company.

Precaution for Foreign Exchange and Foreign Trade act

Since our Products might fall under controlled goods prescribed by the applicable foreign exchange and foreign trade act, please consult with ROHM representative in case of export.

Precaution Regarding Intellectual Property Rights

1. All information and data including but not limited to application example contained in this document is for reference only. ROHM does not warrant that foregoing information or data will not infringe any intellectual property rights or any other rights of any third party regarding such information or data. ROHM shall not be in any way responsible or liable for infringement of any intellectual property rights or other damages arising from use of such information or data.:

2. No license, expressly or implied, is granted hereby under any intellectual property rights or other rights of ROHM or any third parties with respect to the information contained in this document.

Other Precaution

1. This document may not be reprinted or reproduced, in whole or in part, without prior written consent of ROHM.

2. The Products may not be disassembled, converted, modified, reproduced or otherwise changed without prior written consent of ROHM.

3. In no event shall you use in any way whatsoever the Products and the related technical information contained in the Products or this document for any military purposes, including but not limited to, the development of mass-destruction weapons.

4. The proper names of companies or products described in this document are trademarks or registered trademarks of ROHM, its affiliated companies or third parties.

© 2014 ROHM Co., Ltd. All rights reserved.

General Precaution

1. Before you use our Products, you are requested to carefully read this document and fully understand its contents. ROHM shall not be in any way responsible or liable for failure, malfunction or accident arising from the use of any ROHM's Products against warning, caution or note contained in this document.

2. All information contained in this document is current as of the issuing date and subject to change without any prior notice. Before purchasing or using ROHM's Products, please confirm the latest information with a ROHM sales representative.

3. The information contained in this document is provided on an "as is" basis and ROHM does not warrant that all information contained in this document is accurate and/or error-free. ROHM shall not be in any way responsible or liable for any damages, expenses or losses incurred by you or third parties resulting from inaccuracy or errors of or concerning such information.

© 2014 ROHM Co., Ltd. All rights reserved.

bu94601kv - Web Page

Part Number	bu94601kv
Package	VQFP64
Unit Quantity	1000
Minimum Package Quantity	1000
Packing Type	Taping
Constitution Materials List	inquiry
RoHS	Yes