Smart Power High-Side-Switch

Features

- Overload protection
- Current limitation
- Short circuit protection
- Thermal shutdown with restart
- Overvoltage protection (including load dump)
- Fast demagnetization of inductive loads
- Reverse battery protection with external resistor
- Open drain diagnostic output
- CMOS compatible input
- Loss of GND and loss of V_{bb} protection
- ESD - Protection
- Very low standby current
- AEC qualified
- Green product (RoHS compliant)

Product Summary

Overvoltage protection	$V_{bb(AZ)}$	41	V
Operating voltage	$V_{bb(on)}$	5...34	V
On-state resistance	R_{ON}	350	mΩ
Nominal load current	$I_{L(nom)}$	0.4	A

PG-DSO8

Application

- All types of resistive, inductive and capacitive loads
- µC compatible power switch for 12 V and 24 V DC applications
- Replaces electromechanical relays and discrete circuits

General Description

N channel vertical power FET with charge pump, ground referenced CMOS compatible input and diagnostic feedback, monolithically integrated in Smart SIPMOS® technology. Providing embedded protective functions.

Downloaded from Arrow.com.

Block Diagram

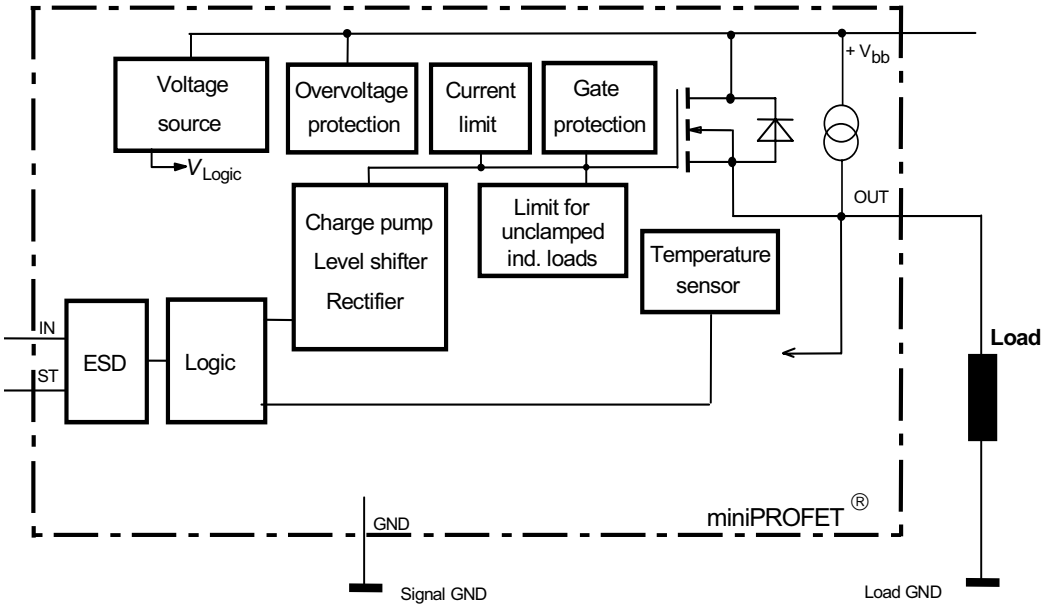

Pin	Symbol	Function
1	GND	Logic ground
2	IN	Input, activates the power switch in case of logic high signal
3	OUT	Output to the load
4	ST	Diagnostic feedback
5	Vbb	Positive power supply voltage
6	Vbb	Positive power supply voltage
7	Vbb	Positive power supply voltage
8	Vbb	Positive power supply voltage

Pin configuration

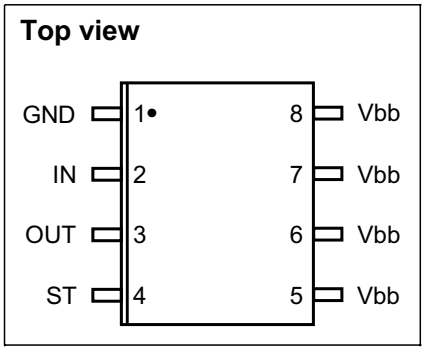

Downloaded from Arrow.com.

Maximum Ratings at T_j = 25°C, unless otherwise specified

Parameter	Symbol	Value	Unit
Supply voltage	V_{bb}	40	V
Supply voltage for full short circuit protection	$V_{bb(SC)}$	V_{bb}	
Continuous input voltage	V_{IN}	-10 ... +16	
Load current (Short - circuit current, see page 5)	I_L	self limited	A
Current through input pin (DC)	I_{IN}	± 5	mA
Operating temperature	T_j	-40 ...+150	°C
Storage temperature	T_{stg}	-55 ... +150	
Power dissipation [1)]	P_{tot}	1.5	W
Inductive load switch-off energy dissipation [1)2)] single pulse, (see page 9) Tj =150 °C, V_{bb} = 13.5 V, I_L = 0.3 A	E_{AS}	800	mJ
Load dump protection [2)] $V_{LoadDump}$ [3)]= V_A + V_S R_I=2Ω, t_d=400ms, V_{IN}= low or high, V_A=13,5V R_L = 45 Ω	$V_{Loaddump}$	60	V
Electro**s**tatic **d**ischarge voltage (Human Body Model) according to ANSI EOS/ESD - S5.1 - 1993 ESD STM5.1 - 1998 Input pin all other pins	V_{ESD}	 ± 1 ± 5	kV

Thermal Characteristics

Thermal resistance @ min. footprint	$R_{th(JA)}$	-	95	-	K/W
Thermal resistance @ 6 cm^2 cooling area [1)]	$R_{th(JA)}$	-	70	83	

[1]Device on 50mm*50mm*1.5mm epoxy PCB FR4 with 6 cm2 (one layer, 70µm thick) copper area for drain connection. PCB is vertical without blown air. (see page 17)

[2]not subject to production test, specified by design

[3]$V_{Loaddump}$ is setup without the DUT connected to the generator per ISO 7637-1 and DIN 40839 .
Supply voltages higher than $V_{bb(AZ)}$ require an external current limit for the GND pin, e.g. with a 150Ω resistor in GND connection. A resistor for the protection of the input is integrated.

Downloaded from Arrow.com.

Electrical Characteristics

Parameter and Conditions at T_j = -40...+150°C, V_{bb} = 13,5V, unless otherwise specified	Symbol	Values			Unit
		min.	typ.	max.	
Load Switching Capabilities and Characteristics					
On-state resistance T_j = 25 °C, I_L = 0.3 A, V_{bb} = 9...40 V T_j = 150 °C	R_{ON}	 - -	 250 450	 350 700	mΩ
Nominal load current Device on PCB [1)2)] T_C = 85 °C, $T_j \leq$ 150 °C	$I_{L(nom)}$	0.4	-	-	A
Turn-on time to 90% V_{OUT} R_L = 47 Ω, V_{IN} = 0 to 10 V	t_{on}	-	-	140	µs
Turn-off time to 10% V_{OUT} R_L = 47 Ω, V_{IN} = 10 to 0 V	t_{off}	-	-	170	
Slew rate on 10 to 30% V_{OUT}, R_L = 47 Ω	dV/dt_{on}	-	-	2	V/µs
Slew rate off 70 to 40% V_{OUT}, R_L = 47 Ω	$-dV/dt_{off}$	-	-	2	

Operating Parameters

Operating voltage	$V_{bb(on)}$	5	-	34	V
Undervoltage shutdown of charge pump	$V_{bb(under)}$	-	-	5	
Undervoltage restart of charge pump	$V_{bb(u\ cp)}$	-	-	5.5	
Standby current V_{IN} = 0 V	$I_{bb(off)}$	-	-	26	µA
Leakage output current (included in $I_{bb(off)}$)	$I_{L(off)}$	-	-	12	
Operating current V_{IN} = high	I_{GND}	-	-	1.3	mA

[1]Device on 50mm*50mm*1.5mm epoxy PCB FR4 with 6 cm2 (one layer, 70µm thick) copper area for drain connection. PCB is vertical without blown air. (see page 17)

[2]Nominal load current is limited by current limitation (see page 5)

Downloaded from Arrow.com.

Electrical Characteristics

Parameter and Conditions at T_j = -40...+150°C, V_{bb} = 13,5V, unless otherwise specified	Symbol	Values			Unit
		min.	typ.	max.	
Protection Functions[1]					
Initial peak short circuit current limit (pin 5 to 3) T_j = -40 °C, V_{bb} = 20 V T_j = 25 °C T_j = 150 °C	$I_{L(SCp)}$	 - - 0.4	 - 1.2 -	 2 - -	A
Repetitive short circuit current limit $T_j = T_{jt}$ (see timing diagrams)	$I_{L(SCr)}$	-	1	-	
Output clamp (inductive load switch off) at $V_{OUT} = V_{bb} - V_{ON(CL)}$, I_{bb} = 4 mA	$V_{ON(CL)}$	41	47	-	V
Overvoltage protection [2] I_{bb} = 4 mA	$V_{bb(AZ)}$	41	-	-	
Thermal overload trip temperature	T_{jt}	150	-	-	°C
Thermal hysteresis	ΔT_{jt}	-	10	-	K
Reverse Battery					
Reverse battery[3]	$-V_{bb}$	-	-	32	V
Drain-source diode voltage ($V_{OUT} > V_{bb}$) T_j = 150 °C	$-V_{ON}$	-	600	-	mV

[1] Integrated protection functions are designed to prevent IC destruction under fault conditions described in the data sheet. Fault conditions are considered as "outside" normal operating range. Protection functions are not designed for continuous repetitive operation.

[2] see also $V_{ON(CL)}$ in circuit diagram on page 8

[3] Requires a 150 Ω resistor in GND connection. The reverse load current through the intrinsic drain-source diode has to be limited by the connected load. Power dissipation is higher compared to normal operating conditions due to the voltage drop across the drain-source diode. The temperature protection is not active during reverse current operation! Input current has to be limited (see max. ratings page 3).

Downloaded from Arrow.com.

Electrical Characteristics

Parameter at T_j = -40...+150°C, V_{bb} = 13,5V, unless otherwise specified	Symbol	Values			Unit
		min.	typ.	max.	
Input and Status feedback					
Input turn-on threshold voltage	$V_{IN(T+)}$	-	-	2.2	V
Input turn-off threshold voltage	$V_{IN(T-)}$	0.8	-	-	
Input threshold hysteresis	$\Delta V_{IN(T)}$	-	0.3	-	
Off state input current V_{IN} = 0.7 V	$I_{IN(off)}$	1	-	30	µA
On state input current V_{IN} = 5 V	$I_{IN(on)}$	1	-	30	
Status output (open drain), Zener limit voltage I_{ST} = 1.6 mA	$V_{ST(high)}$	5.4	6.1	-	V
Status output (open drain), ST low voltage T_j = -40...+25 °C, I_{ST} = 1.6 mA T_j = 150 °C, I_{ST} = 1.6 mA	$V_{ST(low)}$	 - -	 - -	 0.4 0.6	
Status invalid after input slope [1]	$t_{d(ST)}$	-	300	600	µs
Input resistance (see page 8)	R_I	1.5	3.5	5	kΩ

Diagnostic Characteristics

Short circuit detection voltage	$V_{OUT(SC)}$	-	2.8	-	V
Open load detection voltage	$V_{OUT(OL)}$	-	3	-	
Openload detection current included in standby current $I_{bb(off)}$	$I_{L(OL)}$	-	5	-	µA

[1] no delay time after overtemperature switch off and short circuit in on-state

Downloaded from Arrow.com.

	Input level	Output level	Status
Normal operation	L H	L H	L L
Short circuit to GND	L H	L L *	L H
Short circuit to V_{bb} (in off-state)	L H	H H	H L
Overload	L H	L H **	L L
Overtemperature	L H	L L	L H
Open Load in off-state	L H	H H	H L

*) Out ="L": V_{OUT} < 2V typ.
**) Out ="H": V_{OUT} > 2V typ.

Downloaded from Arrow.com.

Terms

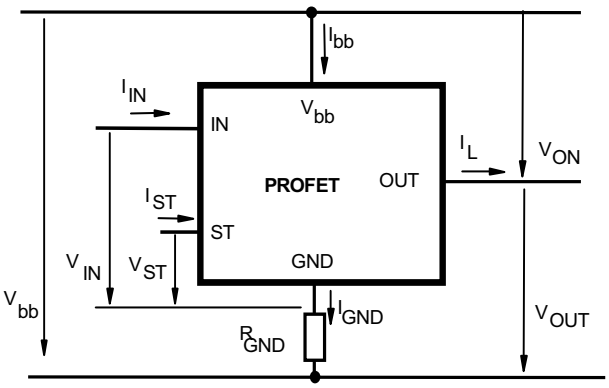

Inductive and overvoltage output clamp

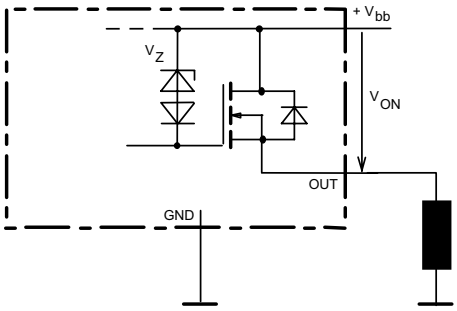

V_{ON} clamped to 47V typ.

Input circuit (ESD protection)

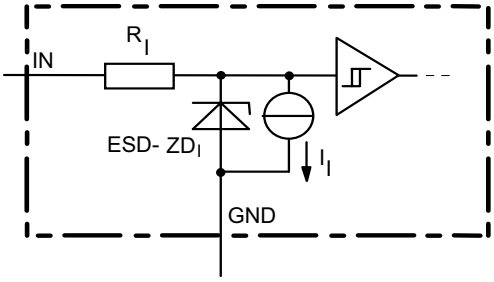

The use of ESD zener diodes as voltage clamp at DC conditions is not recommended

Overvoltage protection of logic part

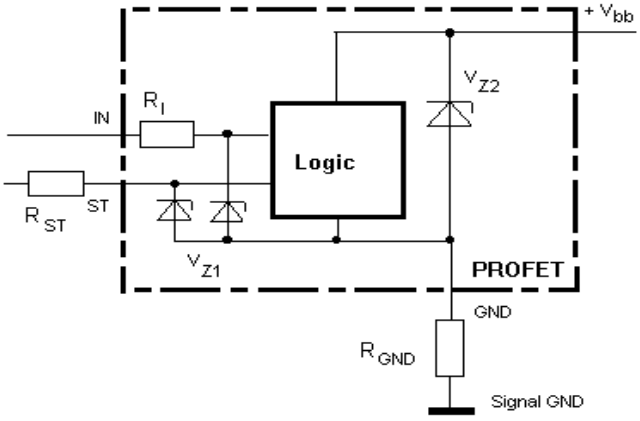

V_{Z1}=6.1V typ., V_{Z2}=$V_{bb(AZ)}$=47V typ.,
R_I=3.5 kΩ typ., R_{GND}=150Ω

Reverse battery protection

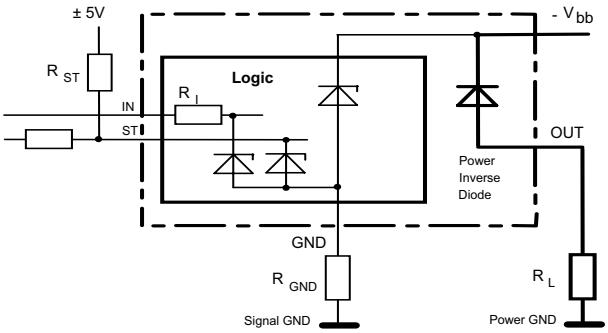

R_{GND}=150Ω, R_I=3.5kΩ typ.,
Temperature protection is not active during inverse current

Status output

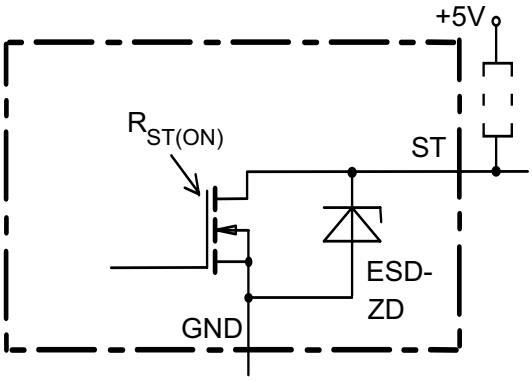

Downloaded from Arrow.com.

Open-load detection

OFF-state diagnostic condition:
V_{OUT} > 3V typ.; IN=low

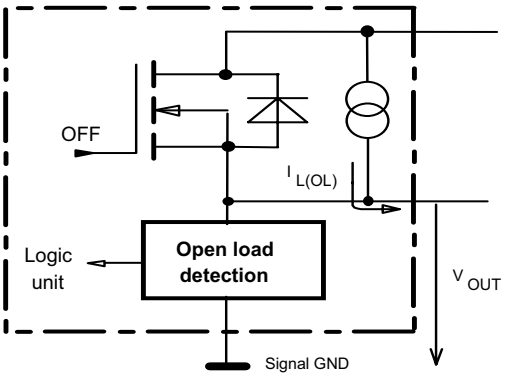

V_{bb} disconnect with charged inductive load

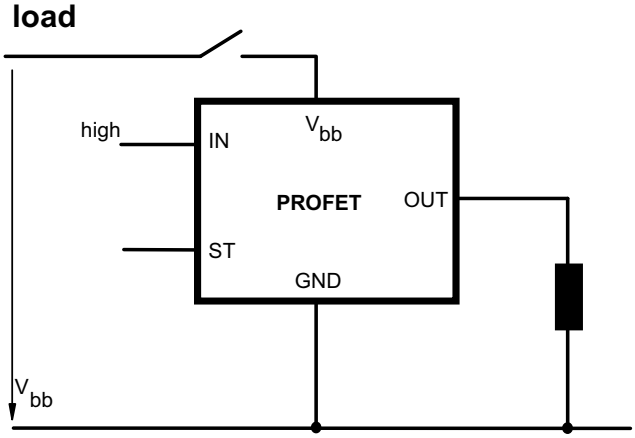

GND disconnect

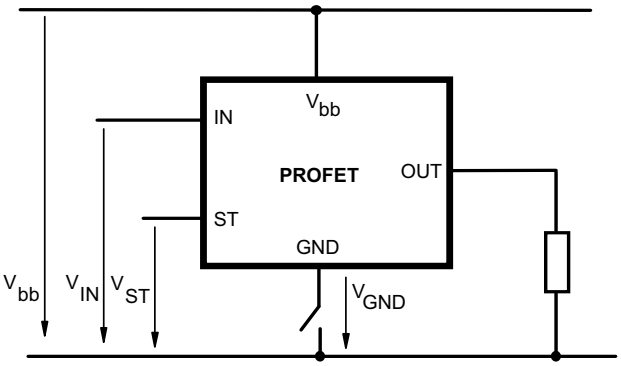

Inductive Load switch-off energy dissipation

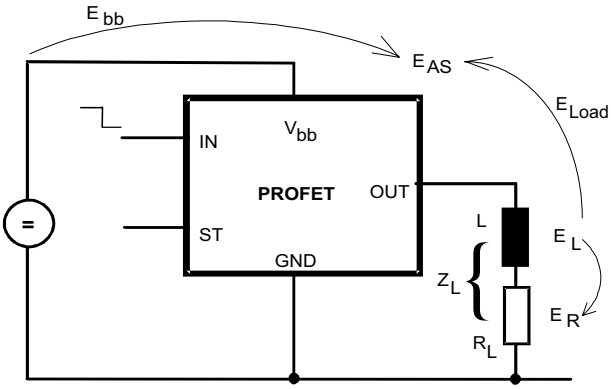

GND disconnect with GND pull up

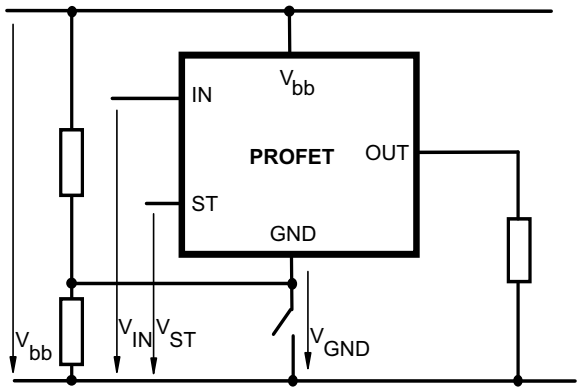

Energy stored in load inductance: $E_L = ½ * L * I_L^2$

While demagnetizing load inductance,
the enérgy dissipated in PROFET is
$E_{AS} = E_{bb} + E_L - E_R = V_{ON(CL)} * i_L(t)\,dt$,
with an approximate solution for $R_L > 0\Omega$:

$$E_{AS} = \frac{I_L * L}{2 * R_L} * (V_{bb} + |V_{OUT(CL)}|) * \ln\left(1 + \frac{I_L * R_L}{|V_{OUT(CL)}|}\right)$$

Downloaded from Arrow.com.

Typ. transient thermal impedance

Z_{thJA}=f(t_p) @ 6cm² heatsink area

Parameter: $D=t_p/T$

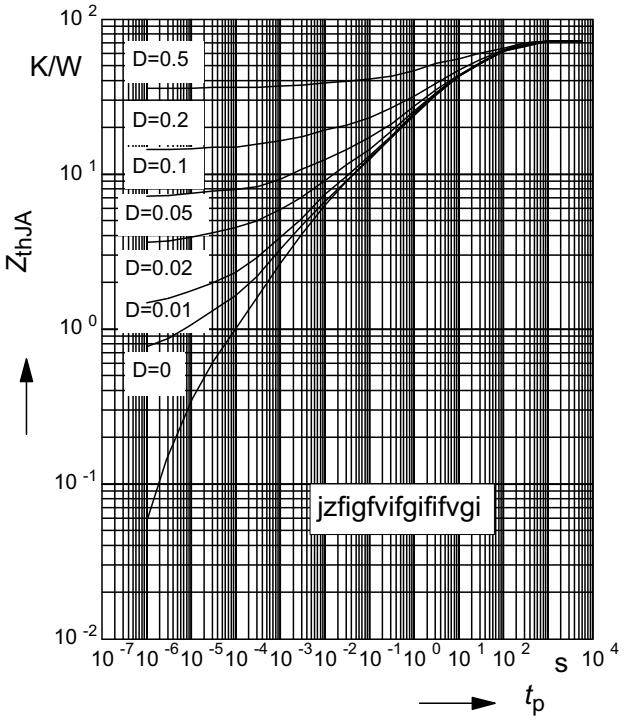

Typ. transient thermal impedance

Z_{thJA}=f(t_p) @ minimal footprint

Parameter: $D=t_p/T$

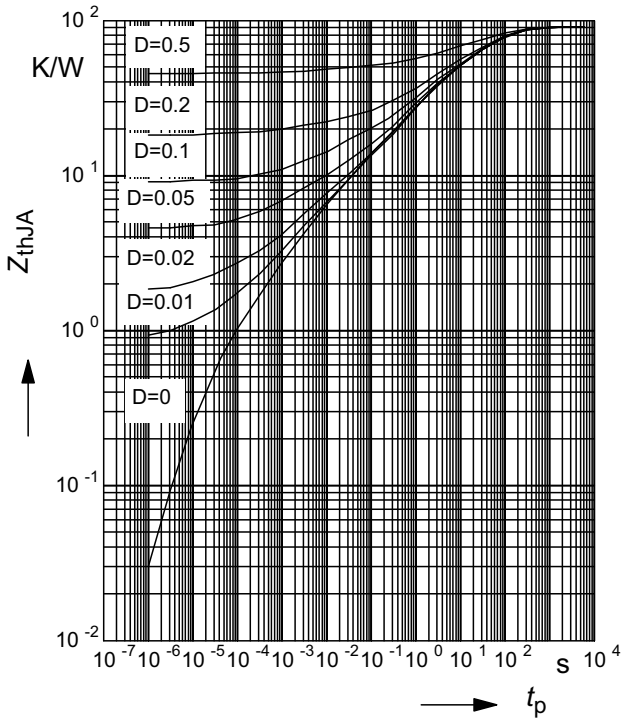

Typ. on-state resistance

R_{ON} = f(T_j) ; V_{bb} = 13,5V ; V_{in} = high

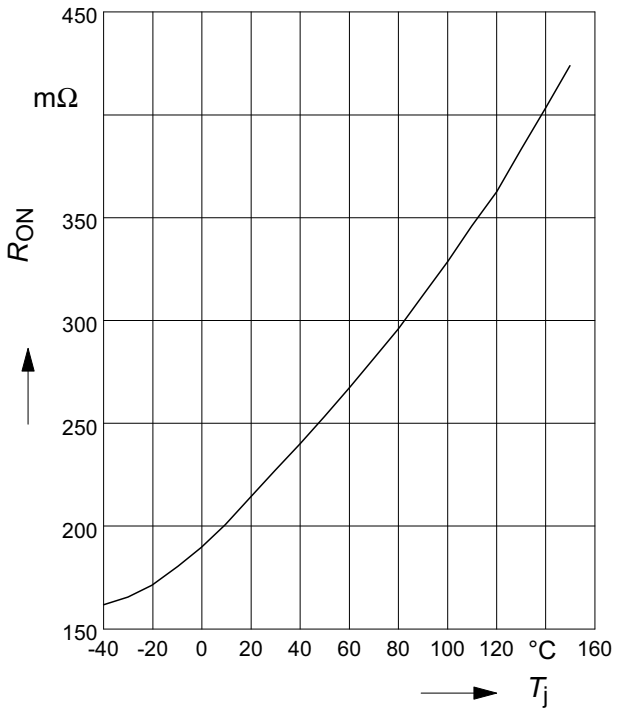

Typ. on-state resistance

R_{ON} = f(V_{bb}); I_L = 0.3A ; V_{in} = high

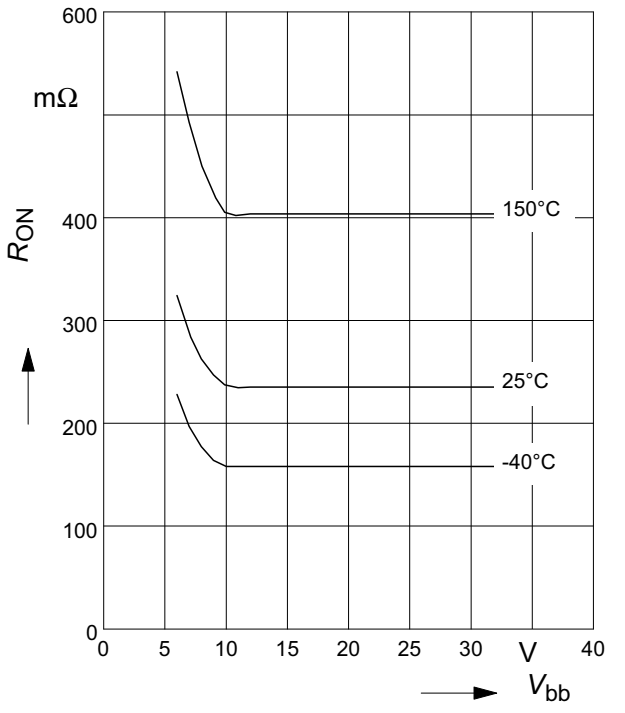

Downloaded from Arrow.com.

Typ. turn on time

t_{on} **= f(**T_j**)**; R_L = 47Ω

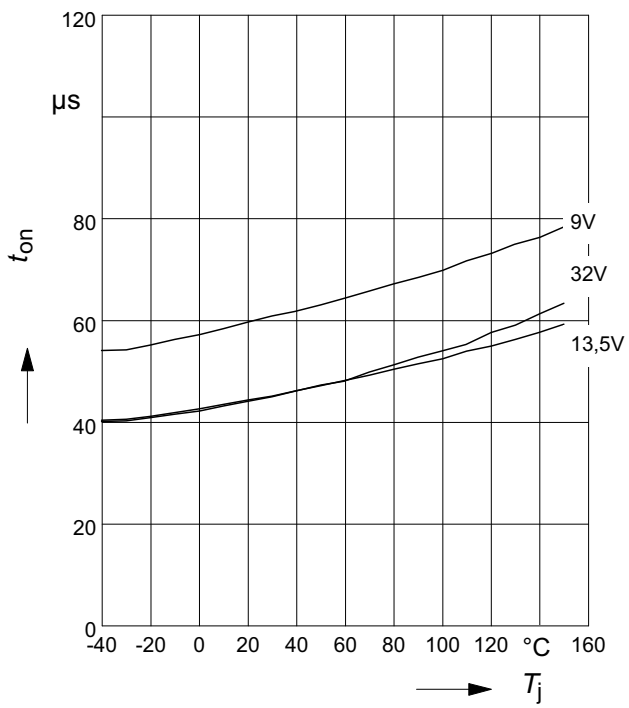

Typ. turn off time

t_{off} **= f(**T_j**)**; R_L = 47Ω

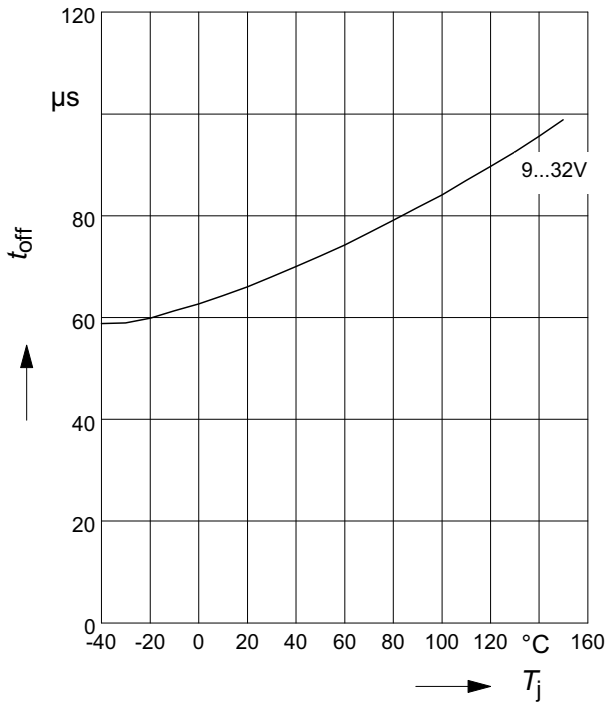

Typ. slew rate on

dV/dt_{on} **= f(**T_j**)** ; R_L = 47 Ω

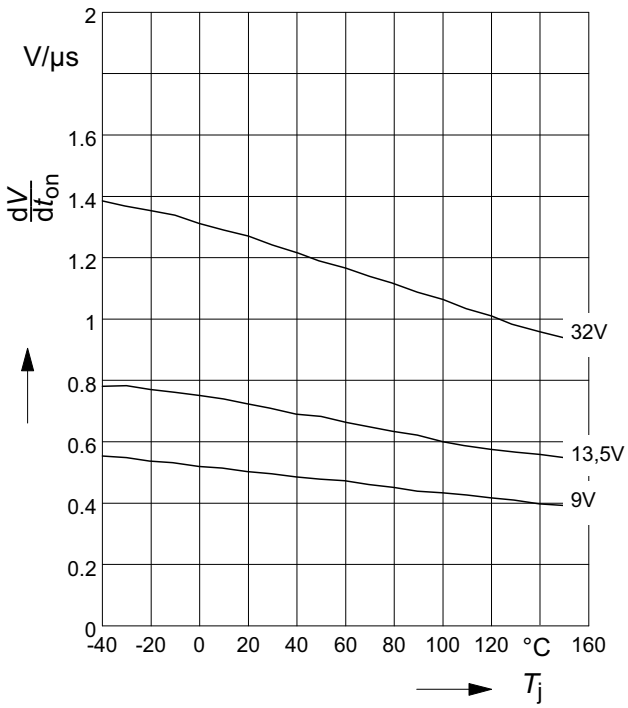

Typ. slew rate off

dV/dt_{off} **= f(**T_j**)**; R_L = 47 Ω

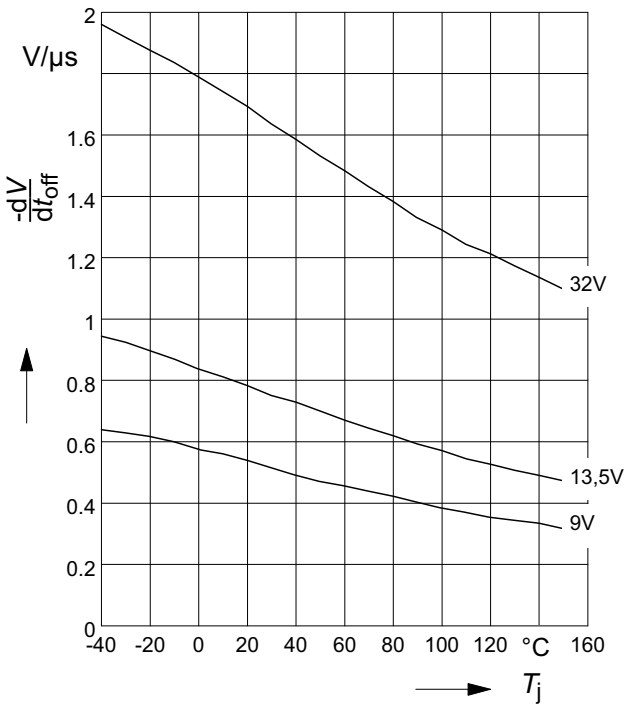

Downloaded from Arrow.com.

Typ. standby current

$I_{bb(off)}$ **= f(**T_j**)** ; V_{bb} = 32V ; V_{IN} = low

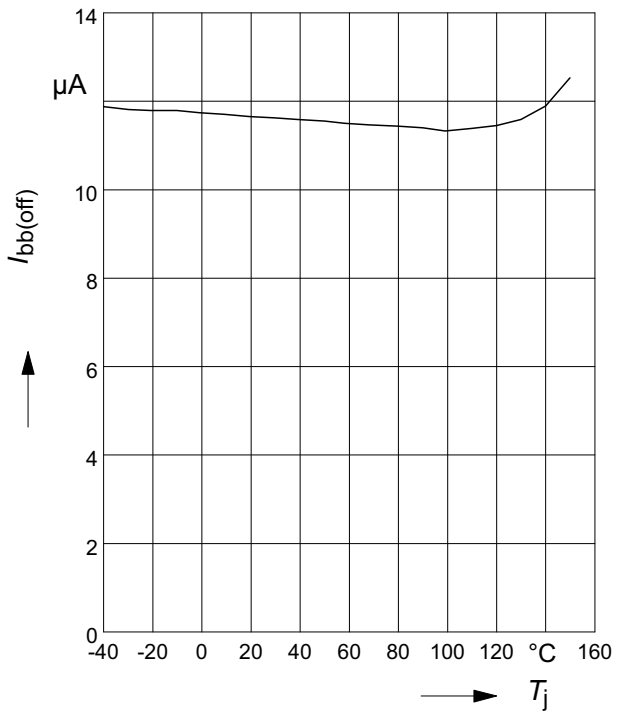

Typ. leakage current

$I_{L(off)}$ **= f(**T_j**)** ; V_{bb} = 32V ; V_{IN} = low

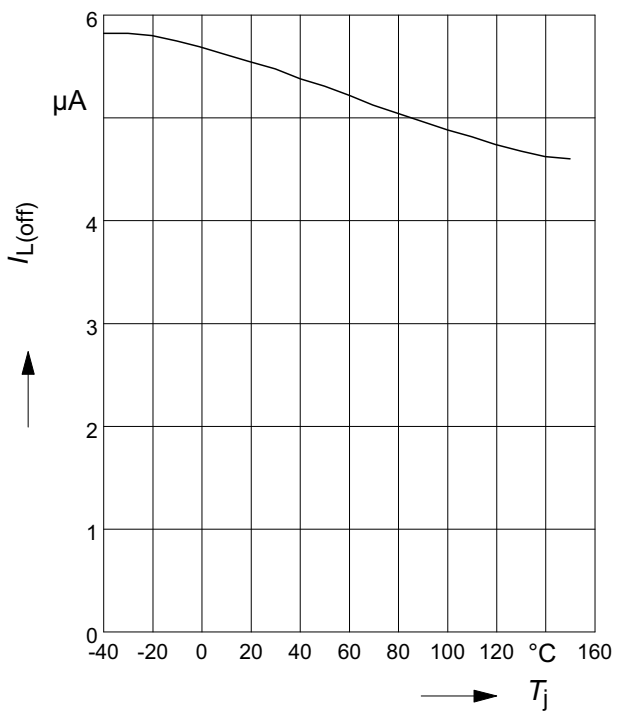

Typ. initial peak short circuit current limit

$I_{L(SCp)}$ **= f(**T_j**)** ; V_{bb} = 20V

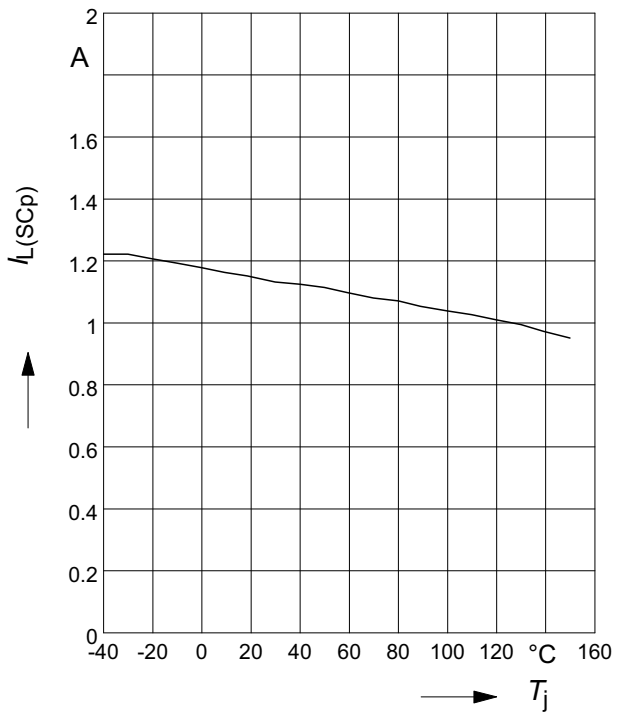

Typ. initial short circuit shutdown time

$t_{off(SC)}$ **= f(**$T_{j,start}$**)** ; V_{bb} = 20V

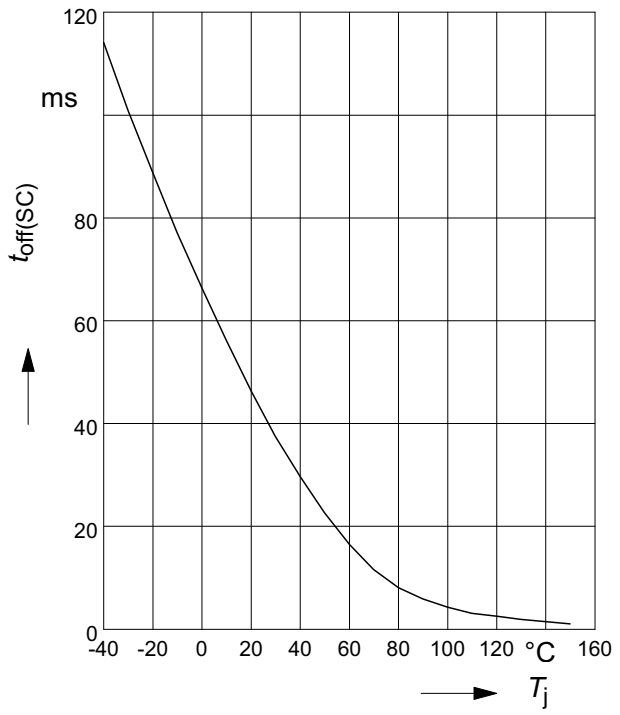

Downloaded from Arrow.com.

Typ. input current

$I_{IN(on/off)} = f(T_j)$; V_{bb} = 13,5V; V_{IN} = low/high

$V_{INlow} \leq 0{,}7V$; V_{INhigh} = 5V

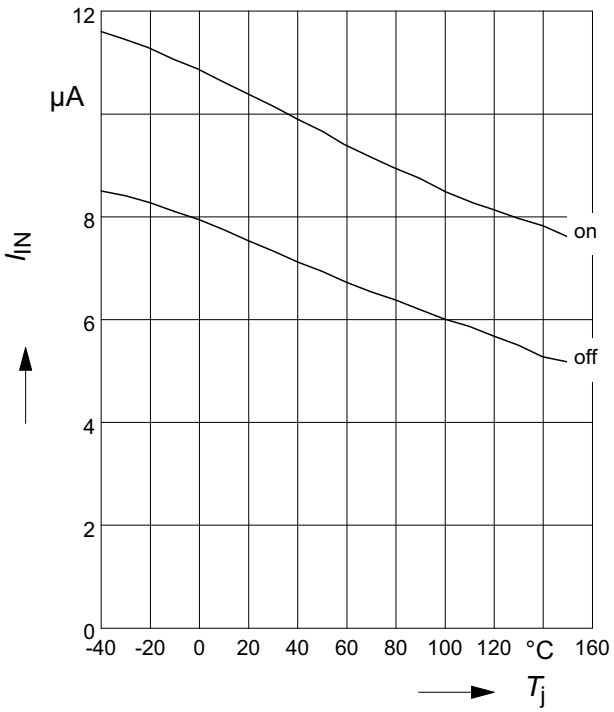

Typ. input current

$I_{IN} = f(V_{IN})$; V_{bb} = 13.5V

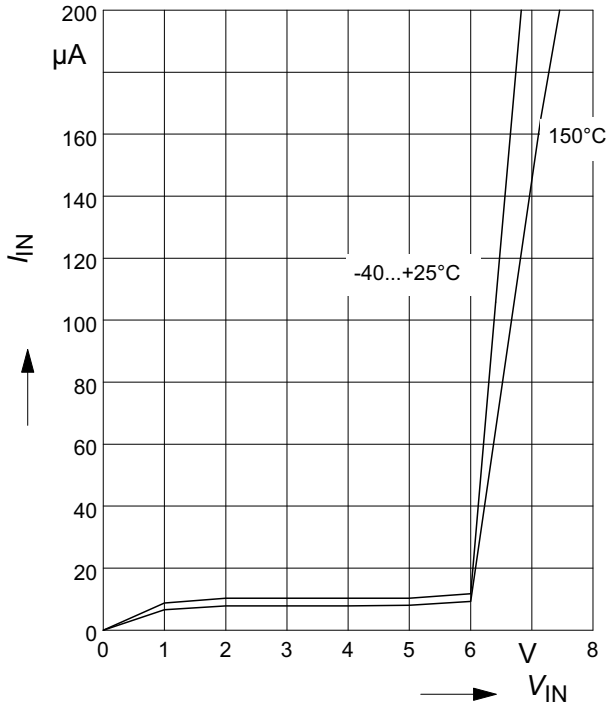

Typ. input threshold voltage

$V_{IN(th)} = f(T_j)$; V_{bb} = 13,5V

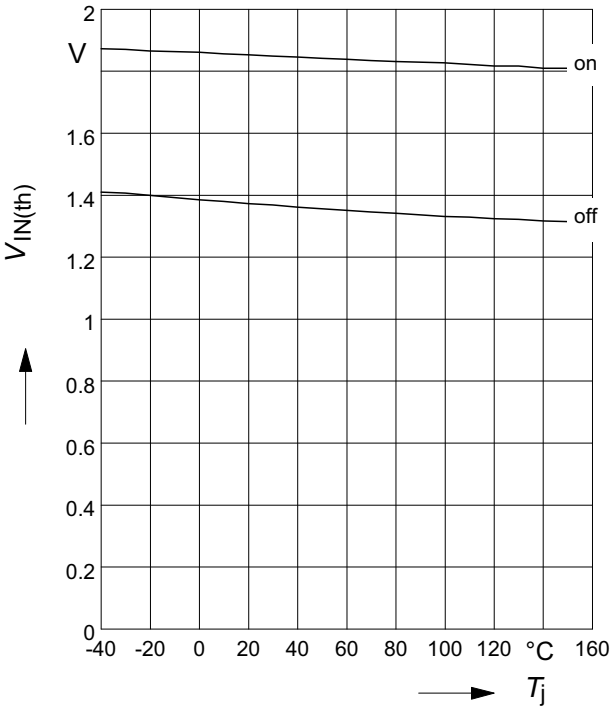

Typ. input threshold voltage

$V_{IN(th)} = f(V_{bb})$; T_j = 25°C

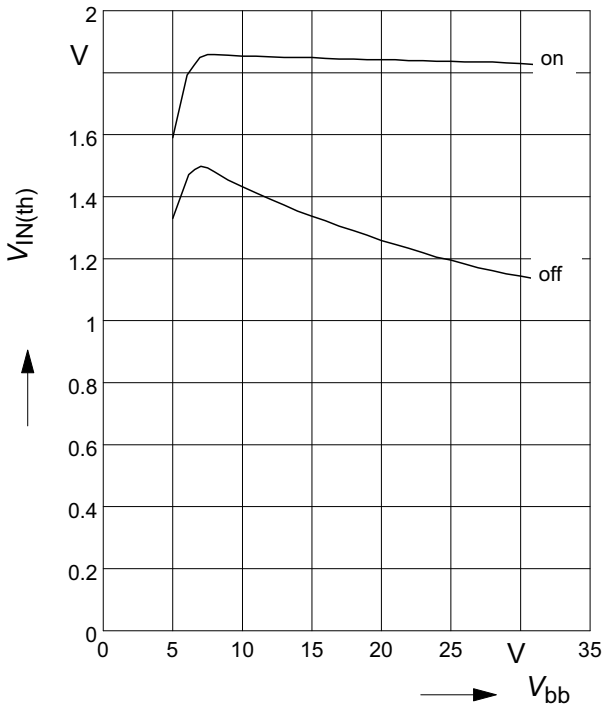

Downloaded from Arrow.com.

Timing diagrams

Figure 1a: Vbb turn on:

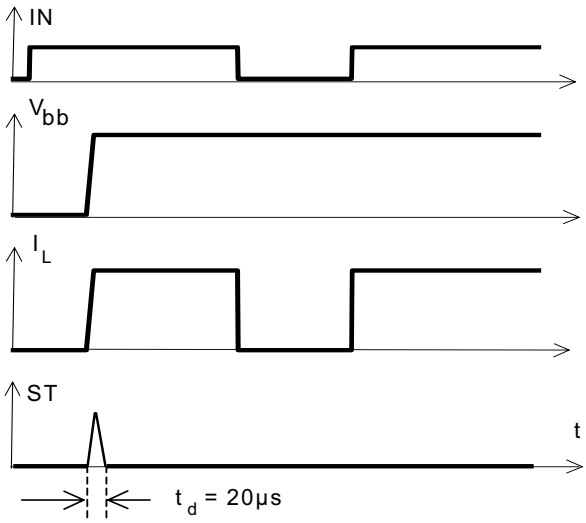

Invalid status during t_d

Figure 2b: Switching a lamp,

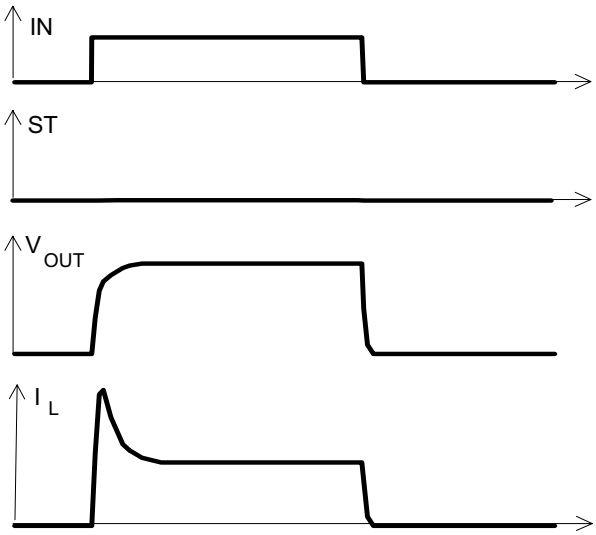

Figure 2a: Switching a resistive load, turn-on/off time and slew rate definition

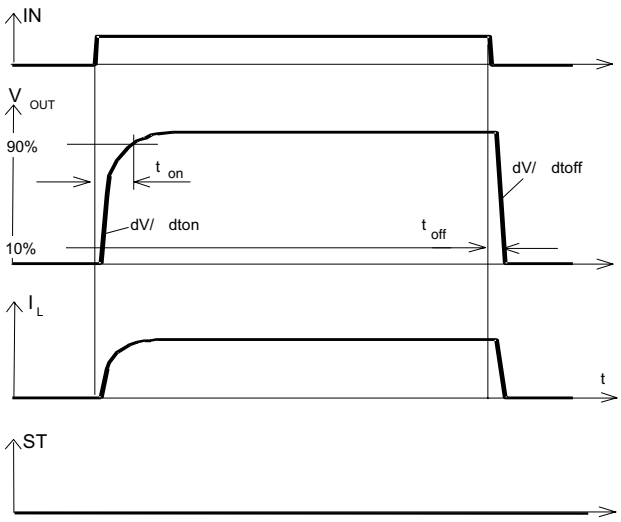

Figure 2c: Switching an inductive load

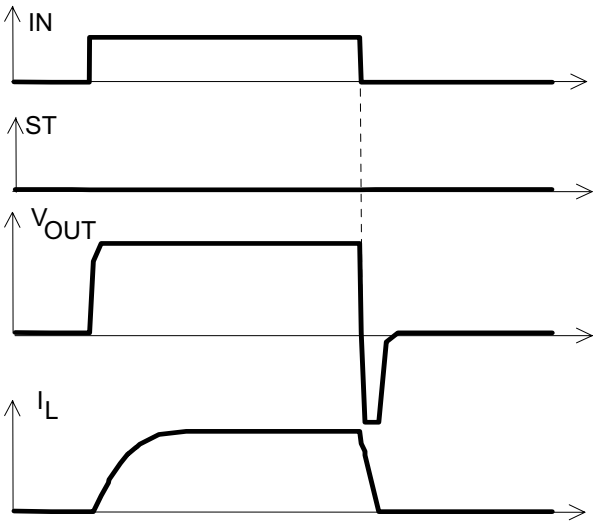

Downloaded from Arrow.com.

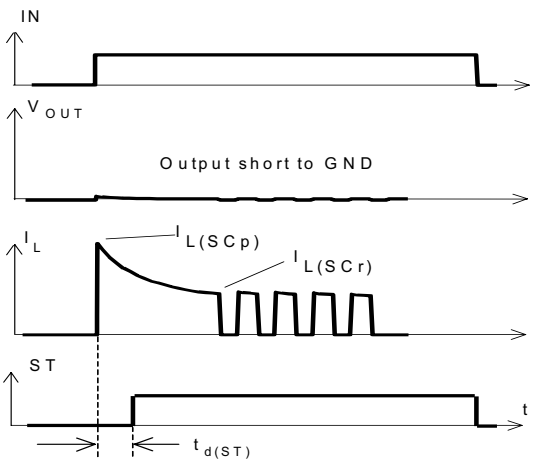

Heating up of the chip may require several milliseconds, depending on external conditions.

Figure 4: Overtemperature:
Reset if $T_j < T_{jt}$

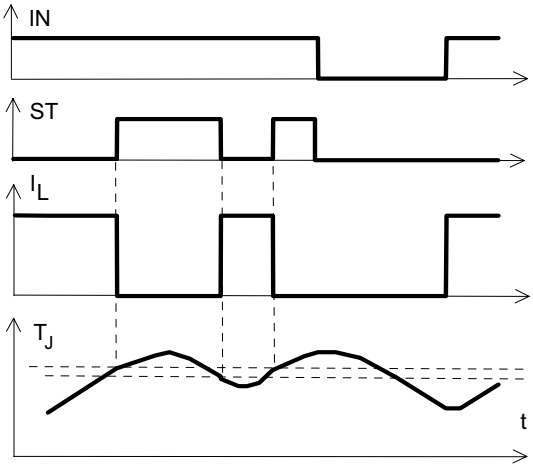

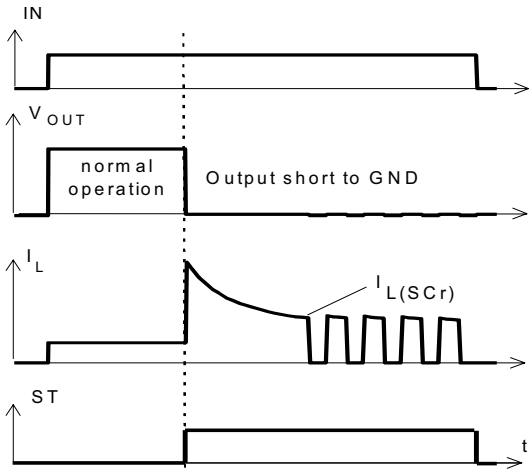

Figure 5: Undervoltage restart of charge pump

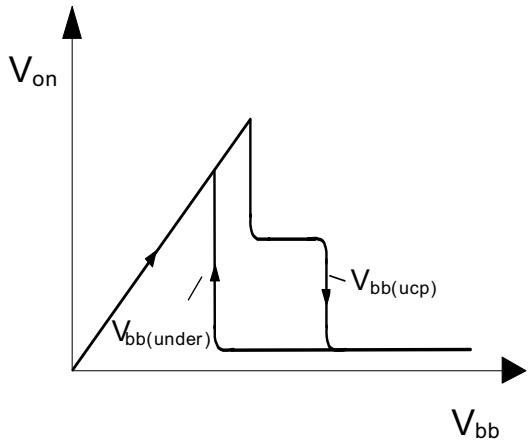

Downloaded from Arrow.com.

Package Outlines

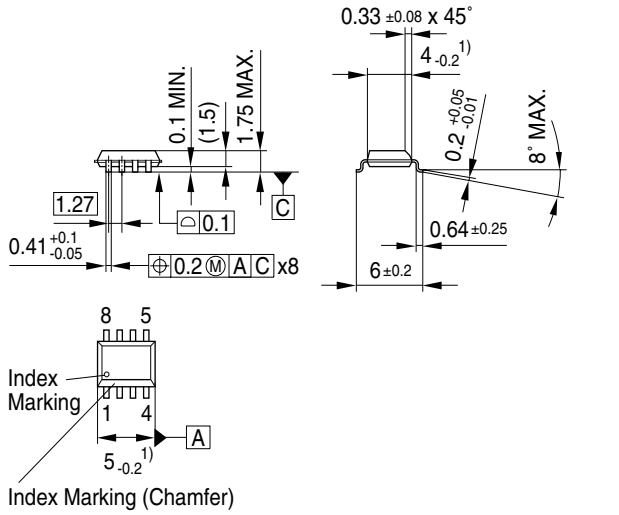

Figure 1 **PG-DSO-8-24** (Plastic Dual Small Outline Package) (RoHS-compliant)

To meet the world-wide customer requirements for environmentally friendly products and to be compliant with government regulations the device is available as a green product. Green products are RoHS-Compliant (i.e Pb-free finish on leads and suitable for Pb-free soldering according to IPC/JEDEC J-STD-020).

Please specify the package needed (e.g. green package) when placing an order

You can find all of our packages, sorts of packing and others in our Infineon Internet Page “Products”: **http://www.infineon.com/products**.

Dimensions in mm

Downloaded from Arrow.com.

Revision History

Version	Date	Changes
V1.1	2007-05-29	Creation of the green datasheet. First page : Adding the green logo and the AEC qualified Adding the bullet AEC qualified and the RoHS compliant features Package page Modification of the package to be green.

Downloaded from Arrow.com.

Edition 2007-05-29

Published by
Infineon Technologies AG
81726 Munich, Germany

© Infineon Technologies AG 5/29/07.
All Rights Reserved.

Legal Disclaimer

The information given in this document shall in no event be regarded as a guarantee of conditions or characteristics ("Beschaffenheitsgarantie"). With respect to any examples or hints given herein, any typical values stated herein and/or any information regarding the application of the device, Infineon Technologies hereby disclaims any and all warranties and liabilities of any kind, including without limitation warranties of non-infringement of intellectual property rights of any third party.

Information

For further information on technology, delivery terms and conditions and prices please contact your nearest Infineon Technologies Office (**www.infineon.com**).

Warnings

Due to technical requirements components may contain dangerous substances. For information on the types in question please contact your nearest Infineon Technologies Office.

Infineon Technologies Components may only be used in life-support devices or systems with the express written approval of Infineon Technologies, if a failure of such components can reasonably be expected to cause the failure of that life-support device or system, or to affect the safety or effectiveness of that device or system. Life support devices or systems are intended to be implanted in the human body, or to support and/or maintain and sustain and/or protect human life. If they fail, it is reasonable to assume that the health of the user or other persons may be endangered.

Downloaded from Arrow.com.