RF front-end solutions for mobile applications

Selection guide

www.infineon.com/rf

Contents

Introduction 4

Infineon's RF front-end system solutions 4

Overview of Infineon's RF front-end products 5

Antenna systems 6

Diversity path 8

Main path 10

Complementary wireless 12

LTE-U/LAA 14

Support material 16

Package information 18

Introduction

Infineon has been a leading semiconductor player in Mobile Communication since the days of Siemens AG, its parent company. Not only are we the world's largest LNA supplier, but also the ones who identified the need for – and created the first – LTE LNAs back in 2014. Furthermore, we're pioneers in LTE RF front-end and antenna tuning excellence, providing customers with new architecture proposals and highly qualified on-site support. Looking to the future, we're already a leading company in upcoming 5G applications such as mmW. As demonstrated by our tailor-made in-house technology development and in-house multi-site manufacturing to ensure a secure supply, we're highly committed to becoming the No. 1 player in radio frequency.

We support you by being the first to provide what applications truly need

- The world's first LTE LNA supplier with the highest market share to date worldwide
- Fastest market share growth in RF switches in 2015
- Fastest market share growth in antenna tuners in 2015

We support you with technological innovations dedicated to RF applications

- World's best SiGe:C technology enabling LNAs with the lowest NF, highest linearity and lowest power consumption
- In-house 130 nm RFCMOS technology enabling switches for complex technology with the smallest size and lowest insertion loss
- 2-layer leadframe package for complex systems and flexibility in design
- Continuous investment in future technologies, leading in mmW application

We support you with system know-how and technical support

- In-house system expert team with a background in smartphone design
- In-house system simulation capability
- Antenna expertise

Infineon's RF front-end system solutions

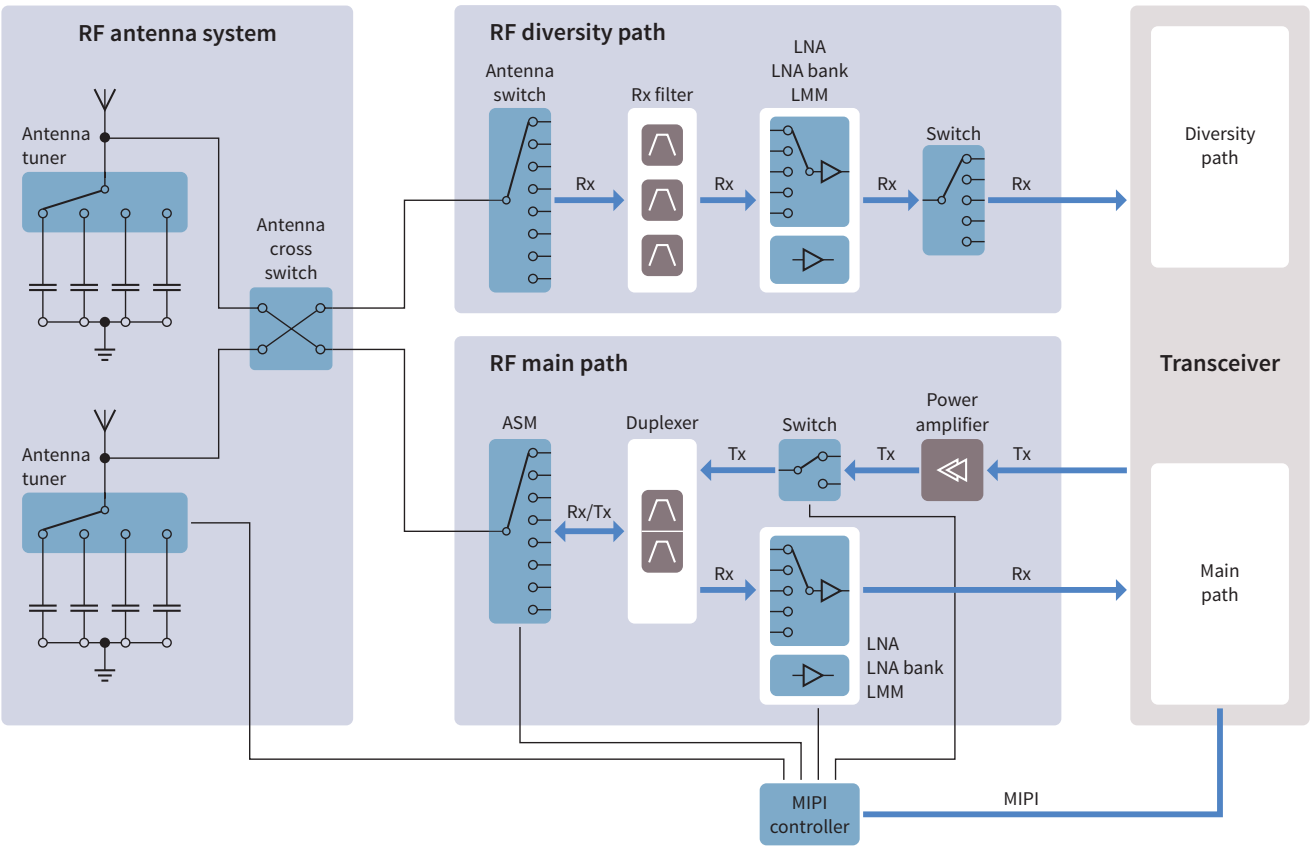

Overview of Infineon's RF front-end products

RF switches

Main path

High power
- BGS12PL6

High linearity
- BGS12PN10
- BGS13PN10
- BGS14PN10

Rx diversity

MIPI carrier aggregation
- BGSX28MA18
- BGSX210MA18
- BGSX212MA18
- BGS1414MN20
- BGS1515MN20
- BGS15MA12

MIPI
- BGS16MN14
- BGS18MN14
- BGS110MN20
- BGS15M2A12

GPIO
- BGS13GA14
- BGS14GA14
- BGS15GA14
- BGS16GA14
- BGS17GA14
- BGS18GA14
- BGS15AN16
- BGS22WL10

General purpose
- BGS12SN6
- BGS12S3N6
- BGS13S2N9
- BGS13SN8

LNA

LTE LNA
- BGA7L1N6
- BGA7M1N6
- BGA7H1N6
- BGA7L1BN6
- BGA7H1BN6

GPS LNA
- BGA824N6
- BGA524N6

Antenna devices

Antenna tuning
- BGSA11GN10
- BGSA12GN10
- BGSA13GN10
- BGSA14GN10
- BGSA133GN10
- BGSA131MN10
- BGSA132MN10
- BGSA14RN10
- BGSA20GN10

Antenna cross switches
- BGSX22GN10

LNA Multiplexer Modules (LMMs)
- BGM15LA12
- BGM15MA12
- BGM15HA12

MIPI controller
- BGAC600A11

www.infineon.com/rf

Antenna systems

RF antenna system – for improved signal quality and a longer battery life

A high-efficiency RF antenna needs space – something in short supply in today's smartphones. Outstanding signal quality and a long battery life go hand in hand with a good antenna. With Infineon by your side, you can overcome the challenges associated with antenna systems to create designs in tune with the needs of today.

Customer benefits

- A twenty-fold improvement in antenna radiation efficiency means
- Several hours of more talk time
- Several hours of more data browsing
- 5-bar signal strength wherever you go

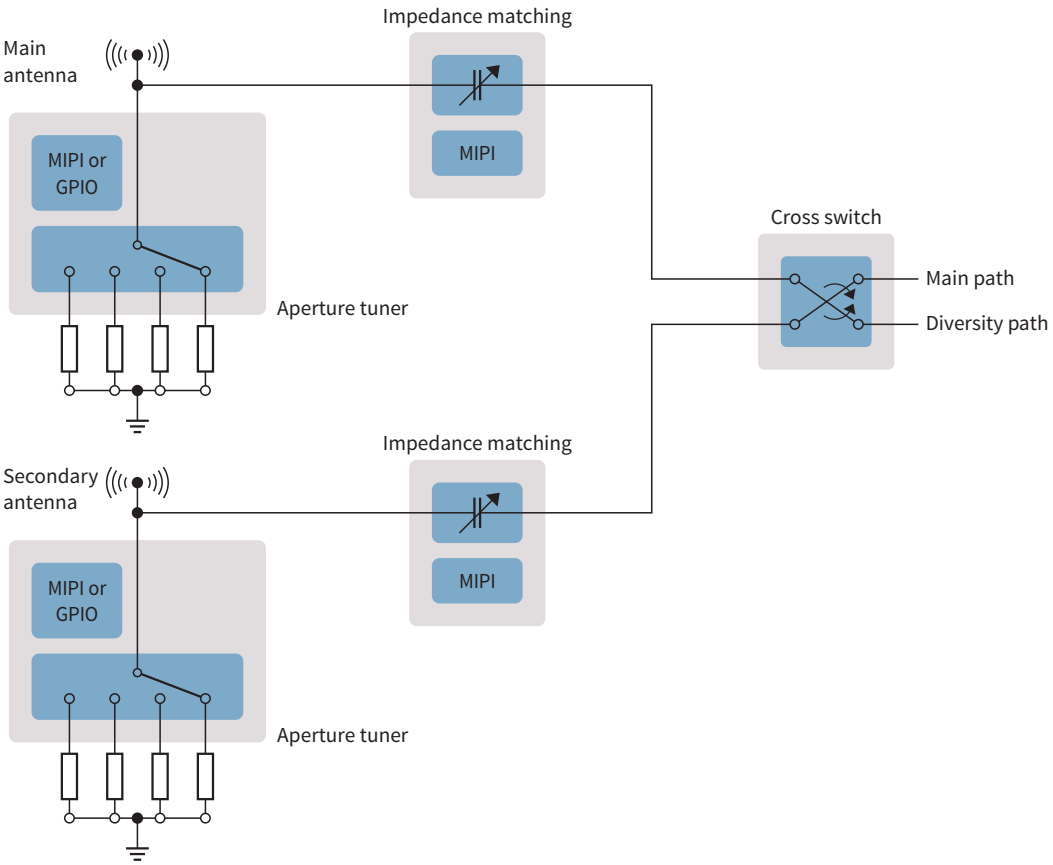

Infineon switches for antenna tuning

Product family	Type	R_{on} [Ω]	C_{off} [pF]	V_{RF} (max.) [V]	Ctrl
BGSA11GN10	2x SPST	0.38	0.25	36	GPIO (4 states)
BGSA12GN10	SP2T	1.60	0.12	48	GPIO (2 states)
BGSA13GN10	SP3T	0.8/1.4/1.6	0.30/0.16/0.12	48	GPIO (4 states)
BGSA14GN10	SP4T	1.60	0.12	48	GPIO (4 states)
BGSA133GN10	SP3T	0.5/1.0/1.0	0.6/0.3/0.3	44	GPIO (4 states)
BGSA131MN10	SP3T	0.5/1.0/1.0	0.6/0.3/0.3	44	MIPI (8 states)
BGSA132MN10	SP3T	0.5/1.0/1.0	0.6/0.3/0.3	44	MIPI (8 states)
BGSA14RN10	SP4T	0.95	0.30	44	GPIO (8 states)
BGSA20GN10	2x SPST	2.30	C1+C2	90	GPIO (4 states)

Infineon cross switches for antenna routing

Product family	Type	P_{max} [dBm]	I_L [dB]	Frequency [MHz]	Ctrl
BGSX22GN10	DPDXT	36	0.3–0.6	100-3800	GPIO

www.infineon.com/rf

Diversity path

Enhanced RF diversity signals for a better user experience

One of the biggest frustrations of modern life is having to constantly wait for videos, maps etc. to load on our smartphone

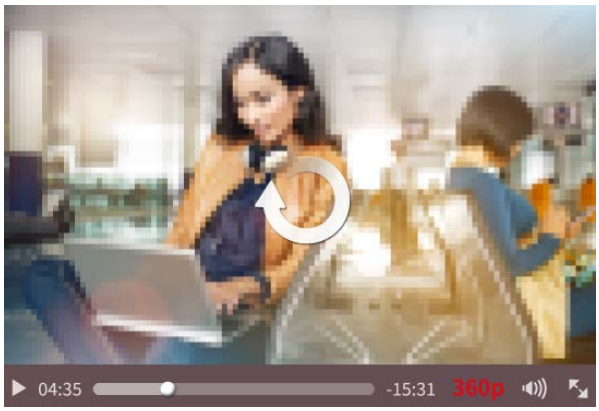

A satisfying user experience depends on the instant, smooth and reliable availability of data

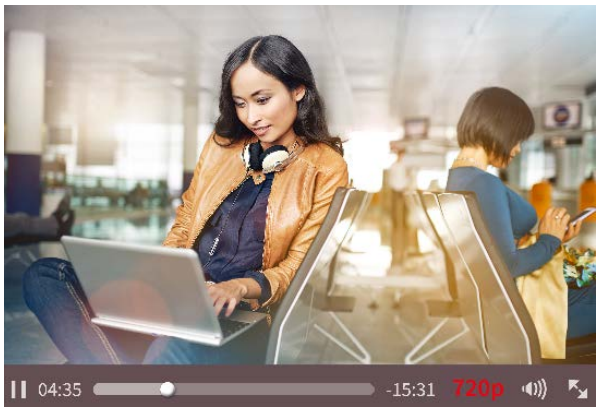

Adding a diversity path coupled with the following technologies could help to achieve the desired satisfying user experience.

Carrier aggregation

- Carrier aggregation increases system bandwidth but requires hardware support
- Up to 4x downlink carrier aggregation-capable chipsets and handsets are available on the market today
- Thanks to their direct mapping and cross ports capability, Infineon's **BGSX2xxMA18** MIPI-controlled switches support up to 4CA and many different band combinations
- Infineon's **BGS15MA12** with direct mapping can support up to 5CA

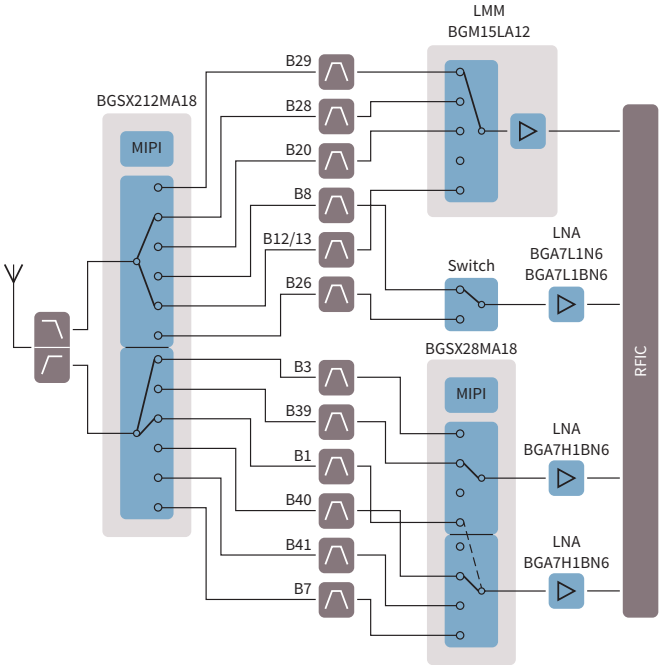

LNA (Low Noise Amplifier)

With more than 2 billion LTE LNAs shipped to date, Infineon is the world's first and foremost LTE LNA supplier. Infineon currently manufactures two LNA series:

LTE LNA without bypass			LTE LNA with bypass	
BGA7L1N6	BGA7M1N6	BGA7H1N6	BGA7L1BN6	BGA7H1BN6
Up to 0.5 dB better NF [1]			Up to 0.3 dB better NF [1]	
> 10 percent less current consumption [1]			> 15 percent less current consumption [1]	

1) Compared to competitors

Adding a low-noise amplifier could typically increase system SNR by 3 dB, thereby increasing the date rate by up to 80 percent.

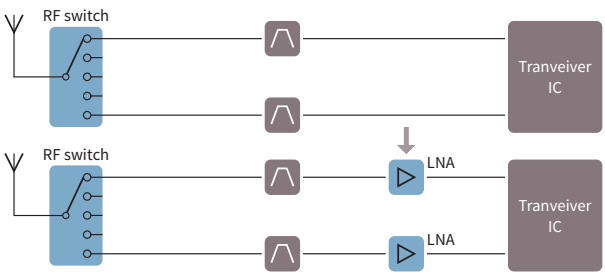

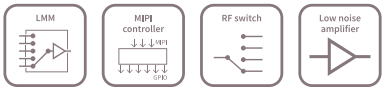

Infineon switches with MIPI for carrier aggregation

Product family	Type	Size [mm]	Frequency (max.) [GHz]	dBm
BGSX28MA18	DPX8T	2.0 x 2.4	3.8	27
BGSX210MA18	DPX10T	2.0 x 2.4	3.8	27
BGSX212MA18	DPX12T	2.0 x 2.4	3.8	27
BGS15MA12	SP5T	1.1 x 1.9	3.0	27
BGS1414MN20	DP8T	2.3 x 2.3	3.0	32
BGS1515MN20	DP10T	2.3 x 2.3	3.0	32

Infineon switches with MIPI

Product family	Type	Size [mm]	Frequency (max.) [GHz]	dBm
BGS110MN20	SP10T	2.3 x 2.3	3.0	32
BGS18MN14	SP8T	2.0 x 2.0	3.0	32
BGS16MN14	SP6T	2.0 x 2.0	3.0	32
BGS15M2A12	SP5T	1.1 x 1.9	3.0	32

Infineon switches with GIPIO

Product family	Type	Size [mm]	Frequency (max.) [GHz]	dBm
BGS13GA14	SP3T	2.0 x 2.0	6.0	28
BGS14GA14	SP4T	2.0 x 2.0	6.0	28
BGS15GA14	SP5T	2.0 x 2.0	6.0	28
BGS16GA14	SP6T	2.0 x 2.0	6.0	28
BGS17GA14	SP7T	2.0 x 2.0	6.0	28
BGS18GA14	SP8T	2.0 x 2.0	6.0	28
BGS15AN16	SP5T	2.3 x 2.3	3.0	32
BGS22WL10	DPDT	1.15 x 1.55	3.8	30

LNA Multiplexer Modules (LMMs) with MIPI

Product family	Type	Band	Gain [dB]	NF [dB]	Frequency [GHz]
BGM15LA12	SP5T	Low band	17.5	1.10	0.7–1.0
BGM15MA12	SP5T	Mid band	16.7	1.15	1.7–2.2
BGM15HA12	SP5T	High band	16.3	1.20	2.3–2.7

LTE LNA

Product family	Band	Size [mm]	Gain [dB]	NF [dB]	Frequency [GHz]
BGA7L1N6	Low band	1.1 x 0.7	13.0	0.6	0.7–1.0
BGA7M1N6	Mid band	1.1 x 0.7	13.0	0.6	1.7–2.2
BGA7H1N6	High band	1.1 x 0.7	13.0	0.6	2.3–2.7
BGA7L1BN6	Low band	1.1 x 0.7	16.1	0.6	0.7–1.0
BGA7H1BN6	Mid + High band	1.1 x 0.7	15.7	0.8	1.8–2.7

www.infineon.com/rf

Main path

Added value and increased performance with Infineon components

The RF main path simultaneously transmits and receives RF signals. However, the introduction of carrier aggregation – for both transmitting and receiving signals – is making RF designs more complex. RF components have to:

› Handle high-power signals
› Deliver best performance and
› Help to safe valuable battery energy

All our LNA and Switch solutions are designed to do just this

RF main path

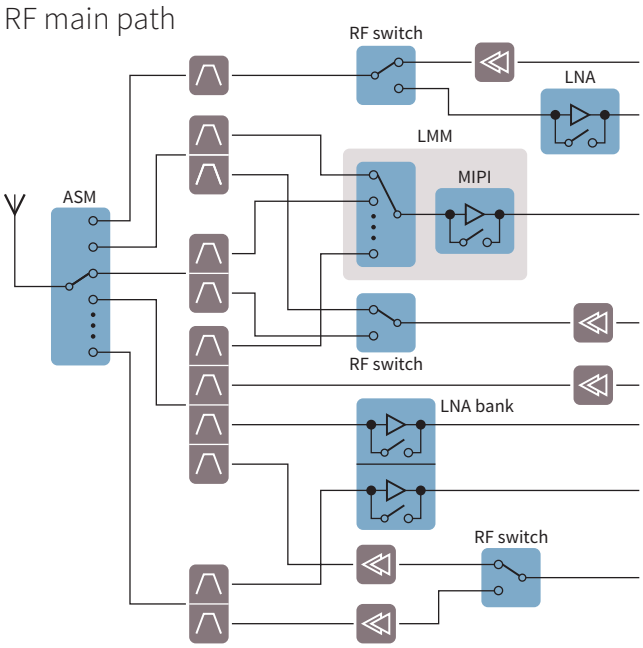

Main path switches

Our high-power switch family can handle very high transmitting signal levels of up to 38 dBm, while at the same time exhibiting low losses to conserve battery power. These switches feature proprietary RF CMOS technology and combine low loss characteristics with high linearity for uplink carrier aggregation, where two signals are transmitted simultaneously by a mobile device.

Low linearity component

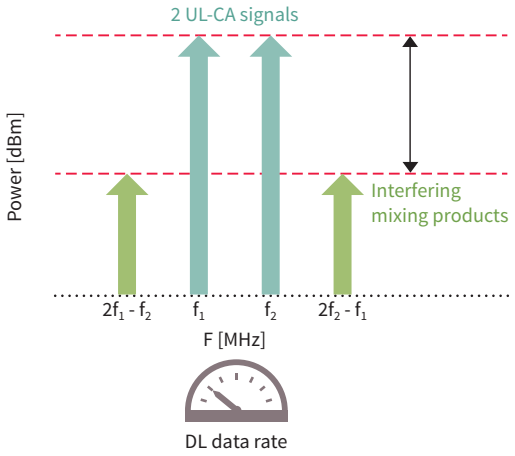

High linearity component

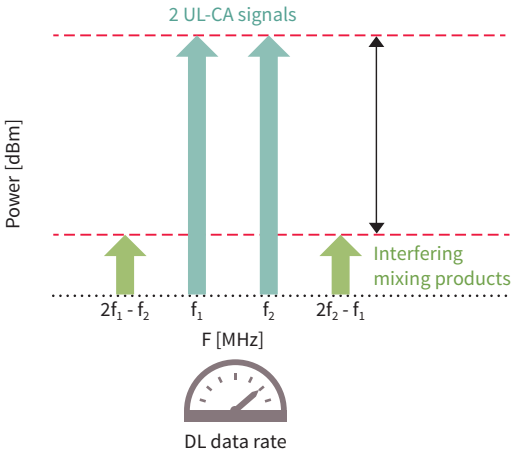

The product family is designed to provide maximum flexibility in RF-front-end design.

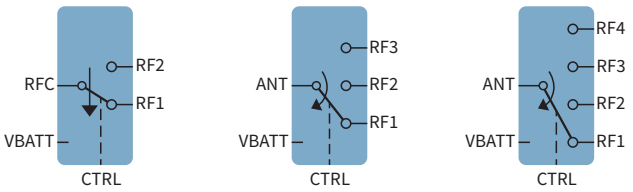

Main path modules

The Low-noise amplifier Multiplex Module (LMM) simplifies the RF-front-end design and helps to

- Reduce size
- Optimize costs
- Improve system performance
- Reduce time-to-market

The LMM components are combine the advantages of discrete RF-components and Front-End Modules (FEM) – the ideal choice for Downlink-Carrier Aggregation (DL-CA) and Uplink Carrier-Aggregation (UL-CA).

Added value of an integrated LNA + switch

- Up to 80 percent less number of routing lines + MIPI-controlled
- Up to 50 percent smaller
- Up to 60 percent BOM cost savings

Discrete RF front-end design

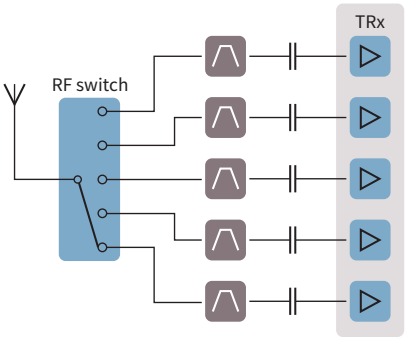

LMM RF front-end design

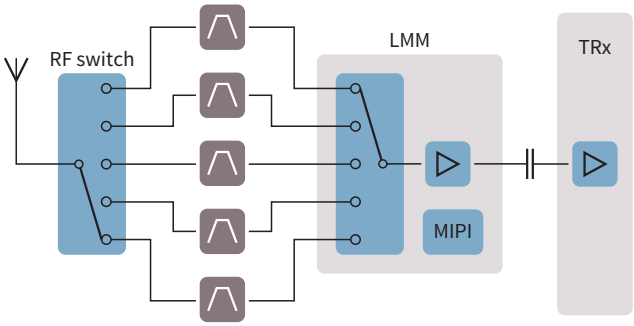

Infineon switches for high power/linearity

Product family	Type	Size [mm]	Frequency (max.) [GHz]	Power (max.) [dBm]
BGS12PL6	SPDT	0.7 x 1.1	3	35
BGS12PN10	SPDT	1.5 x 1.1	4	38
BGS13PN10	SP3T	1.5 x 1.1	4	38
BGS14PN10	SP4T	1.5 x 1.1	4	38

Infineon general-purpose switches SPDT/SP3T

Product family	Type	Size [mm]	Frequency (max.) [GHz]	Power (max.) [dBm]
BGS13S2N9	SP3T	1.15 x 1.15	2.7	30
BGS13SN8	SP3T	1.15 x 1.15	6.0	30
BGS12SN6	SPDT	0.7 x 1.1	6.0	30
BGS12S3N6	SPDT	0.65 x 0.98	6.0	30

LTE LNA for main path

Product family	Type	Size [mm]	Gain [dB]	NF [dB]	Frequency [GHz]
BGA7L1N6	w/o bypass	1.1 x 0.7	13.0	0.6	0.7–1.0
BGA7M1N6	w/o bypass	1.1 x 0.7	13.0	0.6	1.7–2.2
BGA7H1N6	w/o bypass	1.1 x 0.7	13.0	0.6	2.3–2.7
BGA7L1BN6	with bypass	1.1 x 0.7	16.1	0.6	0.7–1.0
BGA7H1BN6	with bypass	1.1 x 0.7	15.7	0.8	1.8–2.7

LNA Multiplexer Modules (LMMs) with MIPI

Product family	Type	Size [mm]	Gain [dB]	NF [dB]	Frequency [GHz]
BGM15LA12	SP5T + LNA	1.9 x 1.1	17.5	1.10	0.7–1.0
BGM15MA12	SP5T + LNA	1.9 x 1.1	16.7	1.15	1.7–2.2
BGM15HA12	SP5T + LNA	1.9 x 1.1	16.3	1.20	2.3–2.7

www.infineon.com/rf

Complementary wireless

Enhanced connectivity in mobile devices

Today's smartphones are veritable all-rounders. After all, they come equipped with a host of complementary wireless applications from WiFi and Bluetooth to GNSS and mobile TV. For today's designers, however, ensuring high-quality signals over larger coverage areas is proving a real challenge. This is something that can be overcome by improving system sensitivity in wireless applications.

Infineon's broad portfolio of solutions includes dedicated Low-Noise Amplifiers (LNA) and various switch solutions for specific wireless applications. Our LNA solutions and switches enable you to create designs with the lowest NF/IL, low current consumption, high linearity and fast switching times – all of which result in the highest possible system sensitivity.

Our end-to-end portfolio also provides the ultimate in design flexibility, offering compact footprints and high levels of integration. Explore our range of wireless applications and find the right solution for your specifications.

Customer benefits

- Improved Time to First Fix (TTFF) for navigation applications – even under the most extreme environmental conditions (urban and mountain environments)
- Better mobile TV reception – even in subways
- Fast WiFi connectivity in 2.4 GHz and 5 GHz frequency bands

GNSS

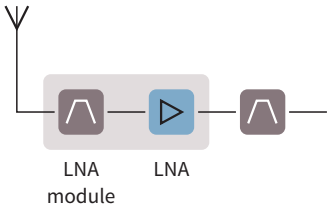

WiFi

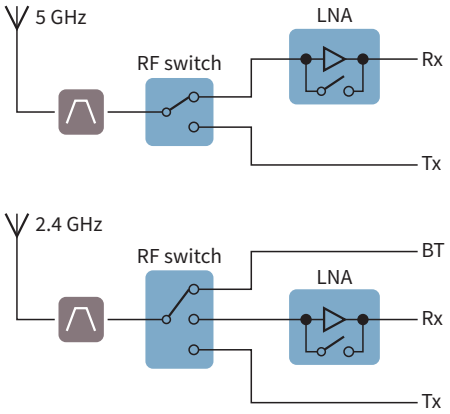

Mobile TV + FM radio

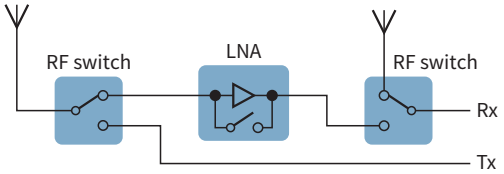

GNSS LNA

Product family	Size [mm]	Gain [dB]	Current mA]	NF [dB]
BGA824N6	1.1 x 0.7	17.1	3.9	< 0.55
BGA524N6	1.1 x 0.7	20.0	2.5	< 0.55

Mobile TV LNA

Product family	Size [mm]	Ctrl	Gain modes [dB]	Supply voltage [V]	Frequency [MHz]
BGA729N6	1.1 x 0.7	GPIO	16.3 / -4.0 / -20	1.5 to 3.3	70–1000

www.infineon.com/rf

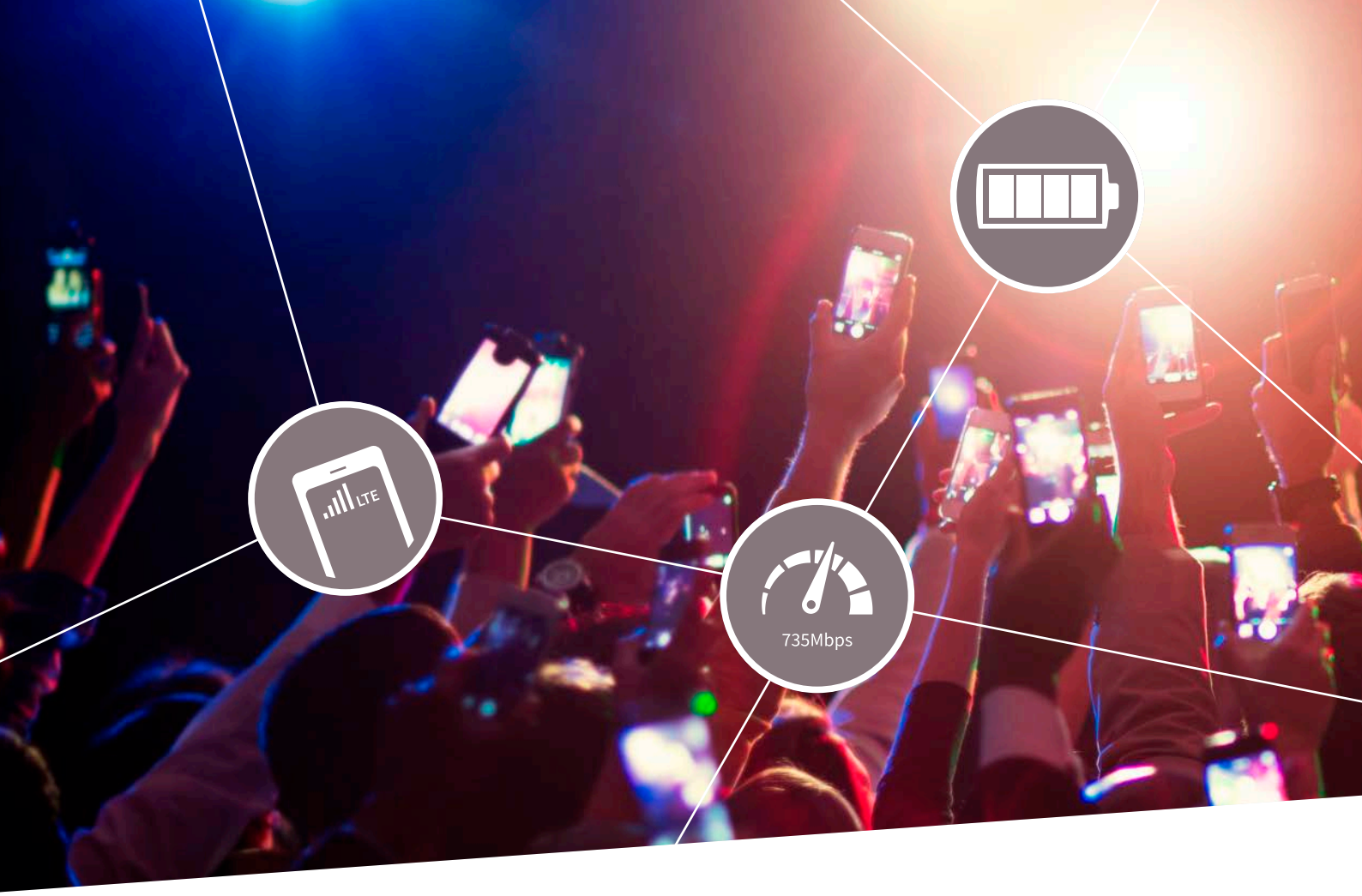

LTE-U/LAA

Taking data rates to the next level with 5–6 GHz unlicensed band

Motivation

Bandwidth is the most scarce resource in mobile communication. It's hard to get and the costs associated with a successful bid run into billions. Going for the unlicensed 5–6 GHz is a natural choice:

1. It's free.
2. It offers a very broad bandwidth.

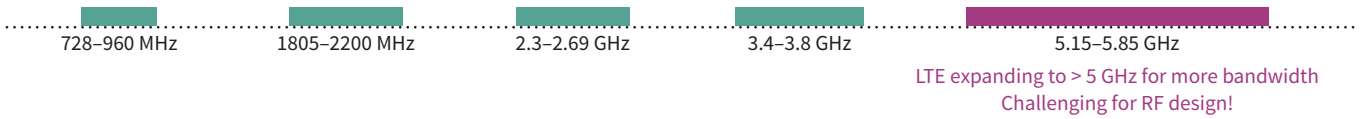

LTE expanding to > 5 GHz for more bandwidth
Challenging for RF design!

Challenge

Operating at a higher frequency presents RF design with a new challenge: the insertion loss associated with PCB trace, and the fact that the noise levels of the RFIC's internal LNA increase significantly (7 dB vs. 4 dB at high band). As a result, a lower SNR leads to a reduced data rate, which compromises the desired effect of LTE-U.

Solution

Adding an LNA to the circuit and placing it as close to the antenna as possible can help improve the SNR by 3 dB and help double the data rate.

In some customers' applications a low insertion loss switch is also required.

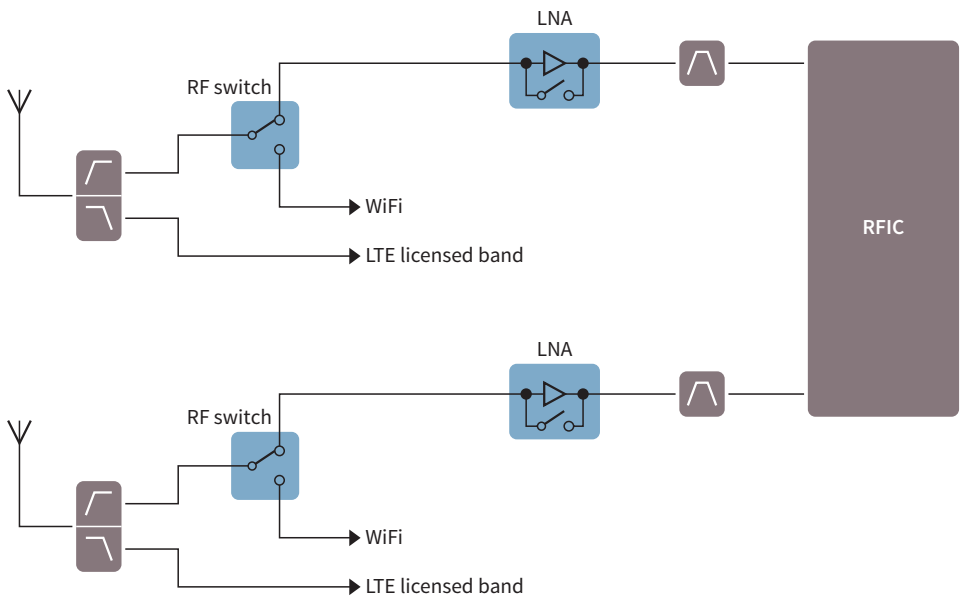

Infineon switches for application at up to 6 GHz

Product name	Type	Size [mm]	Frequency (max.) [GHz]	Power (max.) [dBm]
BGS12SN6	SPDT	0.7 x 1.1	6	30
BGS13GA14	SP3T	2.0 x 2.0	6	28
BGS14GA14	SP4T	2.0 x 2.0	6	28

www.infineon.com/rf

Support material

More detailed information on RF devices

www.infineon.com/mobile

www.infineon.com/mobiledevices

Datasheets/Application notes/Technical documents

www.infineon.com/rf

Component libraries for RF devices

Infineon Technologies provides Component Libraries for part of its product portfolio. This ensures convenient customer access to the latest model versions and a seamless integration into our customer's circuit and system simulators.

www.infineon.com/rfcomponentlibraries

Evaluation boards

www.infineon.com/rfevalboards

Package information

ATSLP-12-1,-4, -5		ATSLP-14		ATSLP-18-2,-3,-4	
12	1.9 x 1.1 x 0.6	14	2.0 x 2.0 x 0.6	18	2.0 x 2.4 x 0.6
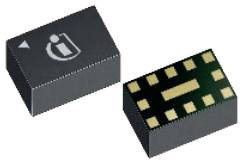 7:1		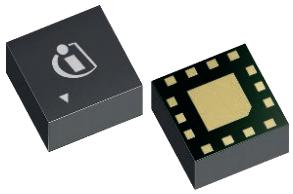 7:1		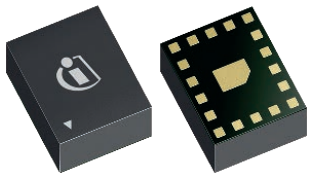 7:1	
TSLP-6-4		**TSLP-10-1**		**TSNP-6-2**	
6	1.1 x 0.7 x 0.31	10	1.55 x 1.15 x 0.39	6	1.1 x 0.7 x 0.375
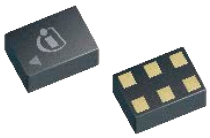 7:1		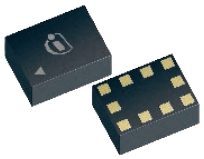 7:1		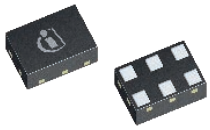 7:1	
TSNP-9-3		**TSNP-10-1**		**TSNP-14-3**	
9	1.1 x 1.1 x 0.375	10	1.5 x 1.1 x 0.375	14	2.0 x 2.0 x 0.77
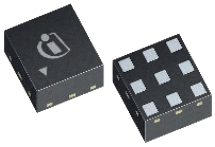 7:1		7:1		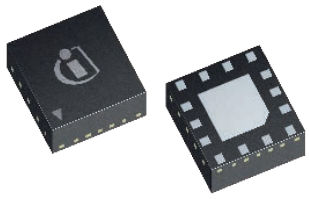 7:1	
TSNP-16-6		**TSNP-20-1**		**Package (JEITA-code)**	
16	2.3 x 2.3 x 0.73	20	2.3 x 2.3 x 0.73	X	L x W x H
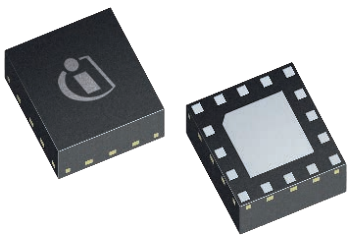 7:1		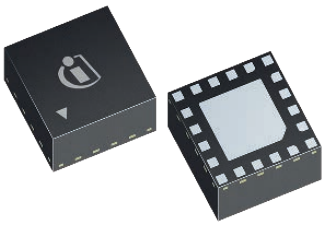 7:1		PIN-Count Scale 1:1 All dimensions in mm	

RoHS All products are available in green (RoHS compliant).

Footprints are recommendations only.
For detailed information please refer to our datasheets or www.infineon.com/packages.

Where to buy

Infineon distribution partners and sales offices:
www.infineon.com/WhereToBuy

Service hotline

Infineon offers its toll-free 0800/4001 service hotline as one central number, available 24/7 in English, Mandarin and German.

- Germany ..... 0800 951 951 951 (German/English)
- China, mainland ..... 4001 200 951 (Mandarin/English)
- India ..... 000 800 4402 951 (English)
- USA ..... 1-866 951 9519 (English/German)
- Other countries ..... 00* 800 951 951 951 (English/German)
- Direct access ..... +49 89 234-0 (interconnection fee, German/English)

* Please note: Some countries may require you to dial a code other than "00" to access this international number. Please visit www.infineon.com/service for your country!

Mobile product catalog

Mobile app for iOS and Android.

www.infineon.com

Published by
Infineon Technologies AG
81726 Munich, Germany

© 2016 Infineon Technologies AG.
All rights reserved.

Order number: B132-I0318-V1-7600-EU-EC-P
Date: 06 / 2016

Please note!
THIS DOCUMENT IS FOR INFORMATION PURPOSES ONLY AND ANY INFORMATION GIVEN HEREIN SHALL IN NO EVENT BE REGARDED AS A WARRANTY, GUARANTEE OR DESCRIPTION OF ANY FUNCTIONALITY, CONDITIONS AND/OR QUALITY OF OUR PRODUCTS OR ANY SUITABILITY FOR A PARTICULAR PURPOSE. WITH REGARD TO THE TECHNICAL SPECIFICATIONS OF OUR PRODUCTS, WE KINDLY ASK YOU TO REFER TO THE RELEVANT PRODUCT DATA SHEETS PROVIDED BY US. OUR CUSTOMERS AND THEIR TECHNICAL DEPARTMENTS ARE REQUIRED TO EVALUATE THE SUITABILITY OF OUR PRODUCTS FOR THE INTENDED APPLICATION.

WE RESERVE THE RIGHT TO CHANGE THIS DOCUMENT AND/OR THE INFORMATION GIVEN HEREIN AT ANY TIME.

Additional information
For further information on technologies, our products, the application of our products, delivery terms and conditions and/or prices, please contact your nearest Infineon Technologies office (www.infineon.com).

Warnings
Due to technical requirements, our products may contain dangerous substances. For information on the types in question, please contact your nearest Infineon Technologies office.

Except as otherwise explicitly approved by us in a written document signed by authorized representatives of Infineon Technologies, our products may not be used in any life-endangering applications, including but not limited to medical, nuclear, military, life-critical or any other applications where a failure of the product or any consequences of the use thereof can result in personal injury.

Mouser Electronics

Authorized Distributor

Click to View Pricing, Inventory, Delivery & Lifecycle Information:

Infineon:

BGSA14RN10E6327XTSA1 BGSA20GN10E6327XTSA1