Voltage Detector IC Series

Standard CMOS Voltage Detector IC

BD48xxx series BD49xxx series

●General Description

ROHM's BD48xxx and BD49xxx series are highly accurate, low-current Voltage Detector IC series. The family includes BD48xxx devices with N-channel open drain output and BD49xxx devices with CMOS output. The devices are available for specific detection voltages ranging from 2.3V to 6.0V in increments of 0.1V.

●Features

- High accuracy detection
- Ultra-low current consumption
- Two output types (Nch open drain and CMOS output)
- Wide Operating temperature range
- Very small and low height package
- Package SSOP5 is similar to SOT-23-5 (JEDEC)
- Package SSOP3 is similar to SOT-23-3 (JEDEC)

●Key Specifications

- Detection voltage: 2.3V to 6.0V (Typ.), 0.1V steps
- High accuracy detection voltage: ±1.0%
- Ultra-low current consumption: 0.9μA (Typ.)
- Operating temperature range: -40°C to +105°C

●Package

SSOP5: 2.90mm x 2.80mm x 1.25mm

SSOP3: 2.92mm x 2.80mm x 1.25mm

VSOF5: 1.60 mm x 1.60mm x 0.60mm

●Applications

Circuits using microcontrollers or logic circuits that require a reset.

●Typical Application Circuit

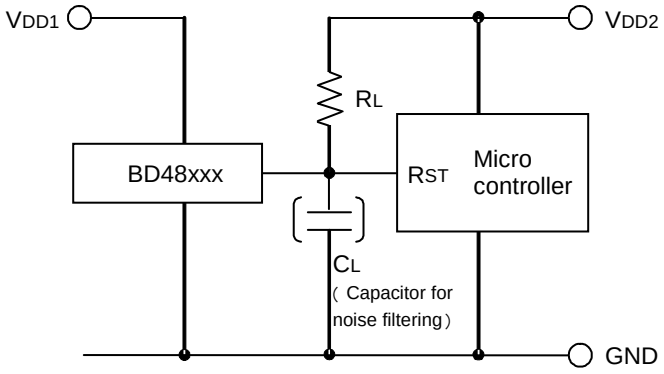

(Open Drain Output type)
BD48xxx series

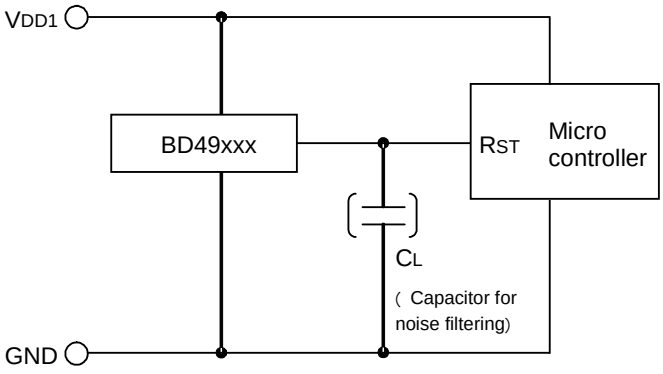

(CMOS Output type)
BD49xxx series

○Product structure : Silicon monolithic integrated circuit ○This product is not designed for protection against radioactive rays

© 2013 ROHM Co., Ltd. All rights reserved.

●**Connection Diagram**

SSOP5

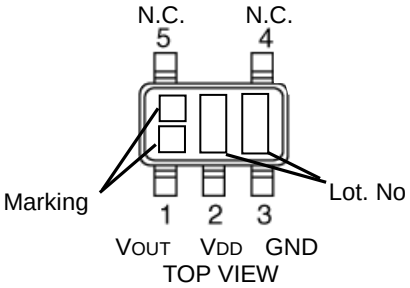

VSOF5

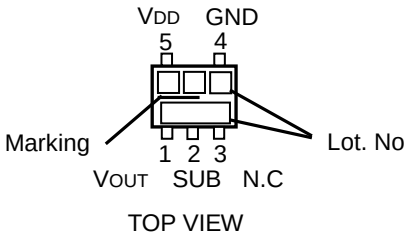

●**Pin Descriptions**

SSOP5		
PIN No.	Symbol	Function
1	VOUT	Reset Output
2	VDD	Power Supply Voltage
3	GND	GND
4	N.C.	Unconnected Terminal
5	N.C.	Unconnected Terminal

VSOF5		
PIN No.	Symbol	Function
1	VOUT	Reset Output
2	SUB	Substrate*
3	N.C.	Unconnected Terminal
4	GND	GND
5	VDD	Power Supply Voltage

*Connect the substrate to GND.

SSOP3(1pin GND)

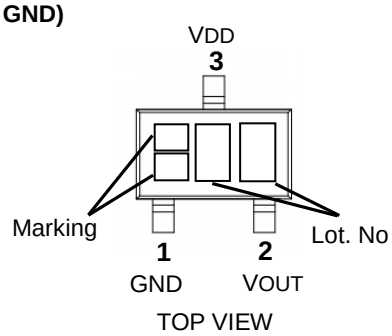

SSOP3(3pin GND)

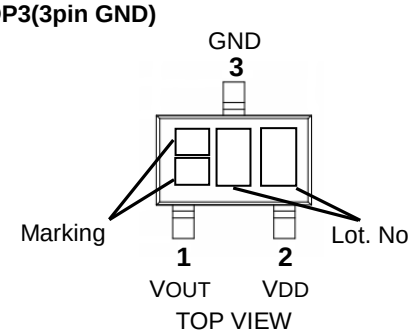

●**Pin Descriptions**

SSOP3-1		
PIN No.	Symbol	Function
1	GND	GND
2	VOUT	Reset Output
3	VDD	Power Supply Voltage

SSOP3-2		
PIN No.	Symbol	Function
1	VOUT	Reset Output
2	VDD	Power Supply Voltage
3	GND	GND

● **Ordering Information**

B D x x x x x x − T R

- Part Number
- Output Type
  48 : Open Drain
  49 : CMOS
- Package1
- Reset Voltage Value
  23 : 2.3V
  ⇩ 0.1V step
  60 : 6.0V
- Package2
- Packaging and forming specification
  Embossed tape and reel
  TR :The pin number 1is the upper right
  :SSOP5
  :VSOF5
  TL :The pin number 1is the upper left
  :SSOP3-1
  :SSOP3-2

Package1	Package2	Package name
E	G	SSOP5
K	G	SSOP3(1pin GND)
L	G	SSOP3(3pin GND)
Blank	FVE	VSOF5
Blank	G	SSOP5

Note: When ordering new SSOP5, select “E” for Package 1 and “G” for Package 2.

© 2013 ROHM Co., Ltd. All rights reserved.

SSOP5

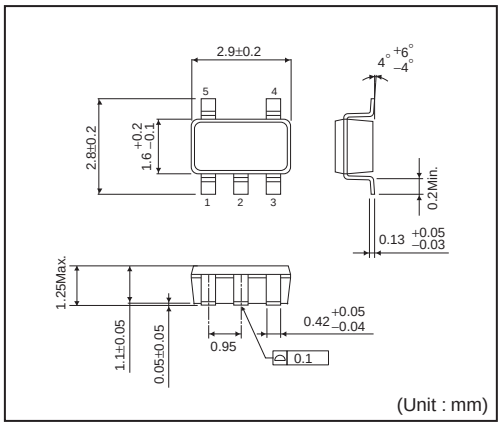

<Tape and Reel information>

Tape	Embossed carrier tape
Quantity	3000pcs
Direction of feed	TR (The direction is the 1pin of product is at the upper right when you hold reel on the left hand and you pull out the tape on the right hand)

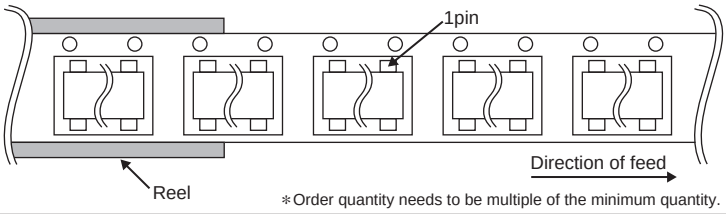

∗Order quantity needs to be multiple of the minimum quantity.

VSOF5

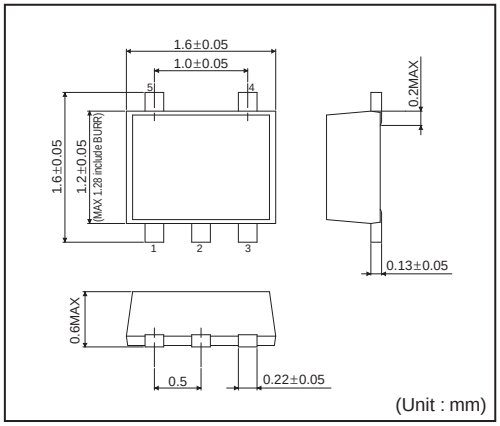

SSOP3

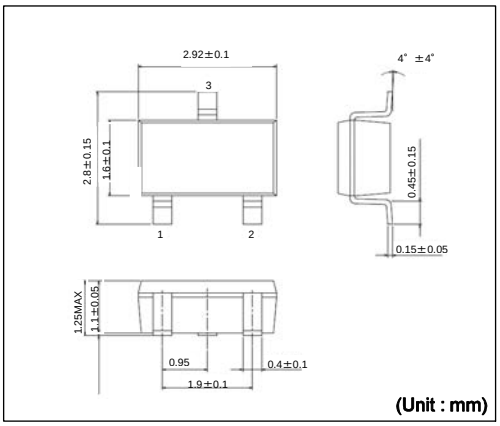

<Tape and Reel information>

Tape	Embossed carrier tape
Quantity	3000pcs
Direction of feed	TL (The direction is the 1pin of product is at the upper right when you hold reel on the left hand and you pull out the tape on the right hand)

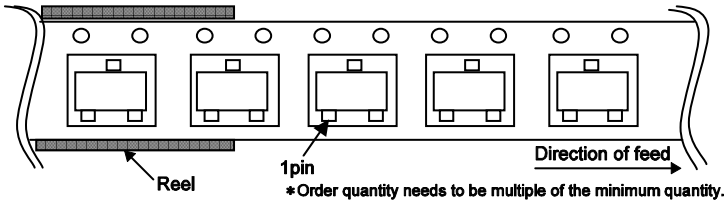

∗Order quantity needs to be multiple of the minimum quantity.

© 2013 ROHM Co., Ltd. All rights reserved.

●**Lineup**

Table 1. Lineup for VSOF5 and SSOP5 Package

Package Type	VSOF5 or SSOP5				SSOP5			
Output Type	Open Drain		CMOS		Open Drain		CMOS	
Detection Voltage	Marking	Part Number	Marking	Part Number	Marking	Part Number	Marking	Part Number
6.0V	EW	BD4860	GW	BD4960	Cm	BD48E60	Ff	BD49E60
5.9V	EV	BD4859	GV	BD4959	Ck	BD48E59	Fe	BD49E59
5.8V	EU	BD4858	GU	BD4958	Ch	BD48E58	Fd	BD49E58
5.7V	ET	BD4857	GT	BD4957	Cg	BD48E57	Fc	BD49E57
5.6V	ES	BD4856	GS	BD4956	Cf	BD48E56	Fb	BD49E56
5.5V	ER	BD4855	GR	BD4955	Ce	BD48E55	Fa	BD49E55
5.4V	EQ	BD4854	GQ	BD4954	Cd	BD48E54	Ey	BD49E54
5.3V	EP	BD4853	GP	BD4953	Cc	BD48E53	Er	BD49E53
5.2V	EN	BD4852	GN	BD4952	Cb	BD48E52	Ep	BD49E52
5.1V	EM	BD4851	GM	BD4951	Ca	BD48E51	En	BD49E51
5.0V	EL	BD4850	GL	BD4950	By	BD48E50	Em	BD49E50
4.9V	EK	BD4849	GK	BD4949	Br	BD48E49	Ek	BD49E49
4.8V	EJ	BD4848	GJ	BD4948	Bp	BD48E48	Eh	BD49E48
4.7V	EH	BD4847	GH	BD4947	Bn	BD48E47	Eg	BD49E47
4.6V	EG	BD4846	GG	BD4946	Bm	BD48E46	Ef	BD49E46
4.5V	EF	BD4845	GF	BD4945	Bk	BD48E45	Ee	BD49E45
4.4V	EE	BD4844	GE	BD4944	Bh	BD48E44	Ed	BD49E44
4.3V	ED	BD4843	GD	BD4943	Bg	BD48E43	Ec	BD49E43
4.2V	EC	BD4842	GC	BD4942	Bf	BD48E42	Eb	BD49E42
4.1V	EB	BD4841	GB	BD4941	Be	BD48E41	Ea	BD49E41
4.0V	EA	BD4840	GA	BD4940	Bd	BD48E40	Dy	BD49E40
3.9V	DV	BD4839	FV	BD4939	Bc	BD48E39	Dr	BD49E39
3.8V	DU	BD4838	FU	BD4938	Bb	BD48E38	Dp	BD49E38
3.7V	DT	BD4837	FT	BD4937	Ba	BD48E37	Dn	BD49E37
3.6V	DS	BD4836	FS	BD4936	Ay	BD48E36	Dm	BD49E36
3.5V	DR	BD4835	FR	BD4935	Ar	BD48E35	Dk	BD49E35
3.4V	DQ	BD4834	FQ	BD4934	Ap	BD48E34	Dh	BD49E34
3.3V	DP	BD4833	FP	BD4933	An	BD48E33	Dg	BD49E33
3.2V	DN	BD4832	FN	BD4932	Am	BD48E32	Df	BD49E32
3.1V	DM	BD4831	FM	BD4931	Ak	BD48E31	De	BD49E31
3.0V	DL	BD4830	FL	BD4930	Ah	BD48E30	Dd	BD49E30
2.9V	DK	BD4829	FK	BD4929	Ag	BD48E29	Dc	BD49E29
2.8V	DJ	BD4828	FJ	BD4928	Af	BD48E28	Db	BD49E28
2.7V	DH	BD4827	FH	BD4927	Ae	BD48E27	Da	BD49E27
2.6V	DG	BD4826	FG	BD4926	Ad	BD48E26	Cy	BD49E26
2.5V	DF	BD4825	FF	BD4925	Ac	BD48E25	Cr	BD49E25
2.4V	DE	BD4824	FE	BD4924	Ab	BD48E24	Cp	BD49E24
2.3V	DD	BD4823	FD	BD4923	Aa	BD48E23	Cn	BD49E23

© 2013 ROHM Co., Ltd. All rights reserved.

●**Lineup - continued**

Table 2. Lineup for SSOF3(1pin GND) and SSOP3(3pin GND) Package

Package Type	SSOP3(1pin GND)				SSOP3(3pin GND)			
Output Type	Open Drain		CMOS		Open Drain		CMOS	
Detection Voltage	Marking	Part Number	Marking	Part Number	Marking	Part Number	Marking	Part Number
6.0V	Cm	BD48K60	Ff	BD49K60	Kb	BD48L60	Np	BD49L60
5.9V	Ck	BD48K59	Fe	BD49K59	Ka	BD48L59	Nn	BD49L59
5.8V	Ch	BD48K58	Fd	BD49K58	Hy	BD48L58	Nm	BD49L58
5.7V	Cg	BD48K57	Fc	BD49K57	Hr	BD48L57	Nk	BD49L57
5.6V	Cf	BD48K56	Fb	BD49K56	Hp	BD48L56	Nh	BD49L56
5.5V	Ce	BD48K55	Fa	BD49K55	Hn	BD48L55	Ng	BD49L55
5.4V	Cd	BD48K54	Ey	BD49K54	Hm	BD48L54	Nf	BD49L54
5.3V	Cc	BD48K53	Er	BD49K53	Hk	BD48L53	Ne	BD49L53
5.2V	Cb	BD48K52	Ep	BD49K52	Hh	BD48L52	Nd	BD49L52
5.1V	Ca	BD48K51	En	BD49K51	Hg	BD48L51	Nc	BD49L51
5.0V	By	BD48K50	Em	BD49K50	Hf	BD48L50	Nb	BD49L50
4.9V	Br	BD48K49	Ek	BD49K49	He	BD48L49	Na	BD49L49
4.8V	Bp	BD48K48	Eh	BD49K48	Hd	BD48L48	My	BD49L48
4.7V	Bn	BD48K47	Eg	BD49K47	Hc	BD48L47	Mr	BD49L47
4.6V	Bm	BD48K46	Ef	BD49K46	Hb	BD48L46	Mp	BD49L46
4.5V	Bk	BD48K45	Ee	BD49K45	Ha	BD48L45	Mn	BD49L45
4.4V	Bh	BD48K44	Ed	BD49K44	Gy	BD48L44	Mm	BD49L44
4.3V	Bg	BD48K43	Ec	BD49K43	Gr	BD48L43	Mk	BD49L43
4.2V	Bf	BD48K42	Eb	BD49K42	Gp	BD48L42	Mh	BD49L42
4.1V	Be	BD48K41	Ea	BD49K41	Gn	BD48L41	Mg	BD49L41
4.0V	Bd	BD48K40	Dy	BD49K40	Gm	BD48L40	Mf	BD49L40
3.9V	Bc	BD48K39	Dr	BD49K39	Gk	BD48L39	Me	BD49L39
3.8V	Bb	BD48K38	Dp	BD49K38	Gh	BD48L38	Md	BD49L38
3.7V	Ba	BD48K37	Dn	BD49K37	Gg	BD48L37	Mc	BD49L37
3.6V	Ay	BD48K36	Dm	BD49K36	Gf	BD48L36	Mb	BD49L36
3.5V	Ar	BD48K35	Dk	BD49K35	Ge	BD48L35	Ma	BD49L35
3.4V	Ap	BD48K34	Dh	BD49K34	Gd	BD48L34	Ky	BD49L34
3.3V	An	BD48K33	Dg	BD49K33	Gc	BD48L33	Kr	BD49L33
3.2V	Am	BD48K32	Df	BD49K32	Gb	BD48L32	Kp	BD49L32
3.1V	Ak	BD48K31	De	BD49K31	Ga	BD48L31	Kn	BD49L31
3.0V	Ah	BD48K30	Dd	BD49K30	Fy	BD48L30	Km	BD49L30
2.9V	Ag	BD48K29	Dc	BD49K29	Fr	BD48L29	Kk	BD49L29
2.8V	Af	BD48K28	Db	BD49K28	Fp	BD48L28	Kh	BD49L28
2.7V	Ae	BD48K27	Da	BD49K27	Fn	BD48L27	Kg	BD49L27
2.6V	Ad	BD48K26	Cy	BD49K26	Fm	BD48L26	Kf	BD49L26
2.5V	Ac	BD48K25	Cr	BD49K25	Fk	BD48L25	Ke	BD49L25
2.4V	Ab	BD48K24	Cp	BD49K24	Fh	BD48L24	Kd	BD49L24
2.3V	Aa	BD48K23	Cn	BD49K23	Fg	BD48L23	Kc	BD49L23

© 2013 ROHM Co., Ltd. All rights reserved.

●Absolute Maximum Ratings

Parameter		Symbol	Limits	Unit
Power Supply Voltage		V_{DD}-GND	-0.3 to +10	V
Output Voltage	Nch Open Drain Output	V_{OUT}	GND-0.3 to +10	V
	CMOS Output		GND-0.3 to V_{DD}+0.3	
Output Current		Io	70	mA
Power Dissipation	SSOP5 *1*4	Pd	540	mW
	SSOP3 *2*4		700	
	VSOF5 *3*4		210	
Operating Temperature		Topr	-40 to +105	°C
Ambient Storage Temperature		Tstg	-55 to +125	°C

*1 Reduced by 5.4mW/°C when used over 25°C.
*2 Reduced by 7.0mW/°C when used over 25°C.
*3 Reduced by 2.1mW/°C when used over 25°C.
*4 When mounted on ROHM standard circuit board (70mm×70mm×1.6mm, glass epoxy board).

●Electrical Characteristics (Unless Otherwise Specified, Ta=-40 to 105°C)

Parameter	Symbol	Condition		Limit Min.	Limit Typ.	Limit Max.	Unit
Detection Voltage	V_{DET}	R_L=470kΩ, V_{DD}=H→L *1		V_{DET}(T) ×0.99	V_{DET}(T)	V_{DET}(T) ×1.01	V
		VDET=2.5V	Ta=+25°C	2.475	2.5	2.525	
			Ta=-40°C to 85°C	2.418	-	2.584	
			Ta=85°C to 105°C	2.404	-	2.597	
		VDET=3.0V	Ta=+25°C	2.970	3.0	3.030	
			Ta=-40°C to 85°C	2.901	-	3.100	
			Ta=85°C to 105°C	2.885	-	3.117	
		VDET=3.3V	Ta=+25°C	3.267	3.3	3.333	
			Ta=-40°C to 85°C	3.191	-	3.410	
			Ta=85°C to 105°C	3.173	-	3.428	
		VDET=4.2V	Ta=+25°C	4.158	4.2	4.242	
			Ta=-40°C to 85°C	4.061	-	4.341	
			Ta=85°C to 105°C	4.039	-	4.364	
		VDET=4.8V	Ta=+25°C	4.752	4.8	4.848	
			Ta=-40°C to 85°C	4.641	-	4.961	
			Ta=85°C to 105°C	4.616	-	4.987	
Output Delay Time "L→H"	t_{PLH}	C_L=100pF R_L=100kΩ *2 Vout=GND→50%		-	-	100	μs
Circuit Current when ON	I_{CC1}	V_{DD}=V_{DET}-0.2V *1	V_{DET}=2.3-3.1V	-	0.51	1.53	μA
			V_{DET}=3.2-4.2V	-	0.56	1.68	
			V_{DET}=4.3-5.2V	-	0.60	1.80	
			V_{DET}=5.3-6.0V	-	0.66	1.98	
Circuit Current when OFF	I_{CC2}	V_{DD}=V_{DET}+2.0V *1	V_{DET}=2.3-3.1V	-	0.75	2.25	μA
			V_{DET}=3.2-4.2V	-	0.80	2.40	
			V_{DET}=4.3-5.2V	-	0.85	2.55	
			V_{DET}=5.3-6.0V	-	0.90	2.70	
Operating Voltage Range	V_{OPL}	V_{OL}≤0.4V, Ta=25 to 105°C, R_L=470kΩ		0.95	-	-	V
		V_{OL}≤0.4V, Ta=-40 to 25°C, R_L=470kΩ		1.20	-	-	

V_{DET}(T) : Standard Detection Voltage(2.3V to 6.0V, 0.1V step)
R_L: Pull-up resistor to be connected between V_{OUT} and power supply.
C_L: Capacitor to be connected between V_{OUT} and GND.
Design Guarantee. (Outgoing inspection is not done on all products.)
*1 Guaranteed at Ta=25°C.
*2 t_{PLH}:V_{DD}=(V_{DET} typ.-0.5V)→(V_{DET} typ.+0.5V)

© 2013 ROHM Co., Ltd. All rights reserved.

●**Electrical Characteristics (Unless Otherwise Specified, Ta=-40 to 105°C) - continued**

Parameter	Symbol	Condition	Limit			Unit
			Min.	Typ.	Max.	
'Low'Output Voltage (Nch)	V_{OL}	V_{DD}=1.5V, I_{SINK} = 0.4 mA, V_{DET}=2.3-6.0V	-	-	0.5	V
		V_{DD}=2.4V, I_{SINK} = 2.0 mA, V_{DET}=2.7-6.0V	-	-	0.5	
'High'Output Voltage (Pch) (BD49Exxx Series)	V_{OH}	V_{DD}=4.8V, I_{SOURCE}=0.7 mA, V_{DET}(2.3V to 4.2V)	VDD-0.5	-	-	V
		V_{DD}=6.0V, I_{SOURCE}=0.9 mA,V_{DET}(4.3V to 5.2V)	VDD-0.5	-	-	
		V_{DD}=8.0V, I_{SOURCE}=1.1 mA,V_{DET}(5.3V to 6.0V)	VDD-0.5	-	-	
Leak Current when OFF (BD48xxx Series)	I_{leak}	V_{DD}=V_{DS}=10V *1	-	-	0.1	µA
Detection Voltage Temperature coefficient	$V_{DET}/\Delta T$	Ta=-40°C to 105°C (Designed Guarantee)	-	±100	±360	ppm/°C
Hysteresis Voltage	ΔV_{DET}	V_{DD}=L→H→L, R_L=470kΩ	V_{DET}×0.03	V_{DET}×0.05	V_{DET}×0.08	V

V_{DET}(T) : Standard Detection Voltage(2.3V to 6.0V, 0.1V step)
R_L: Pull-up resistor to be connected between V_{OUT} and power supply.
C_L: Capacitor to be connected between V_{OUT} and GND.
Design Guarantee. (Outgoing inspection is not done on all products.)
*1 Guaranteed at Ta=25°C.

© 2013 ROHM Co., Ltd. All rights reserved.

●**Block Diagrams**

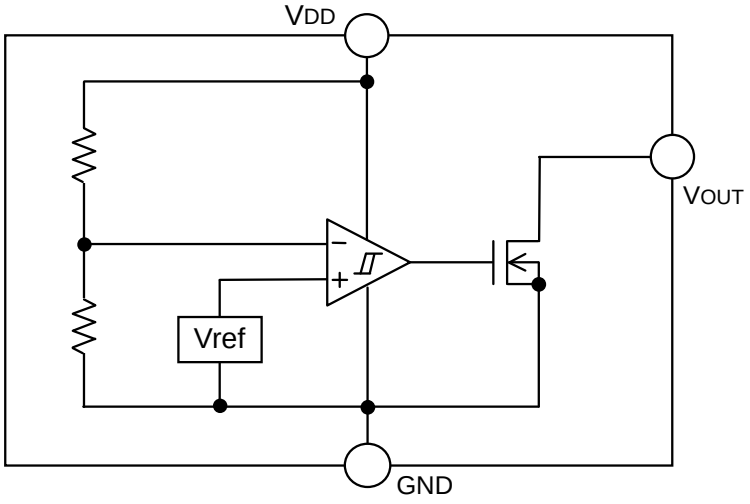

Fig.1 BD48xxx series

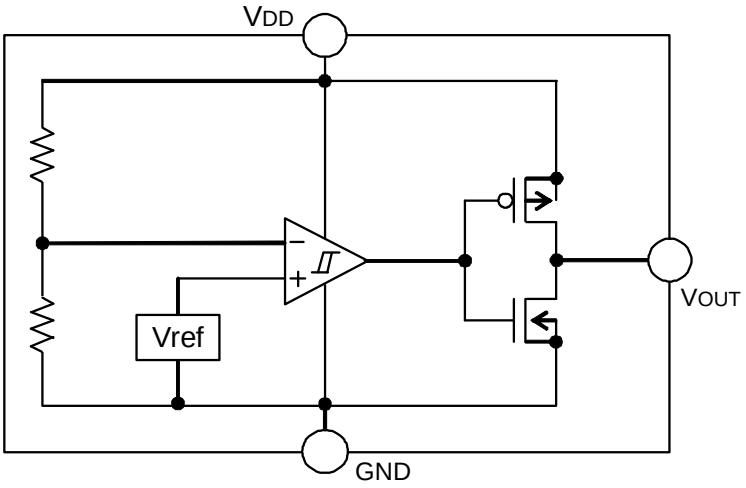

Fig.2 BD49xxx series

© 2013 ROHM Co., Ltd. All rights reserved.

●**Typical Performance Curves**

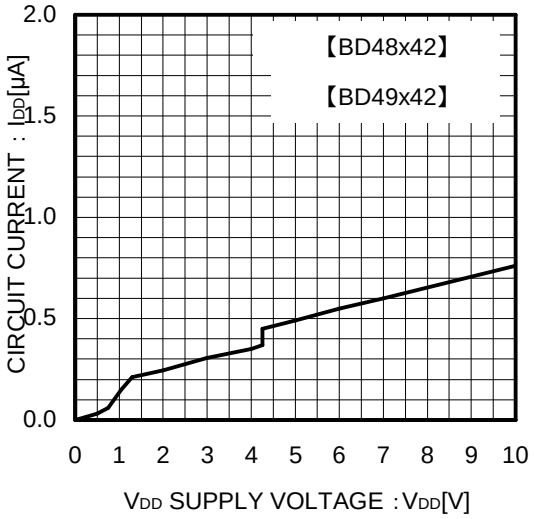

Fig.3 Circuit Current

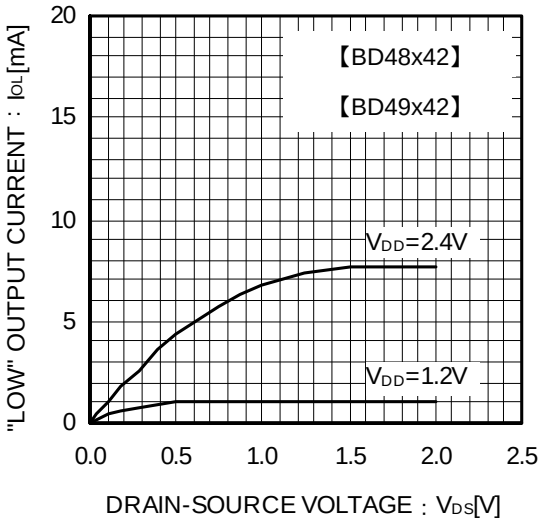

Fig.4 “Low” Output Current

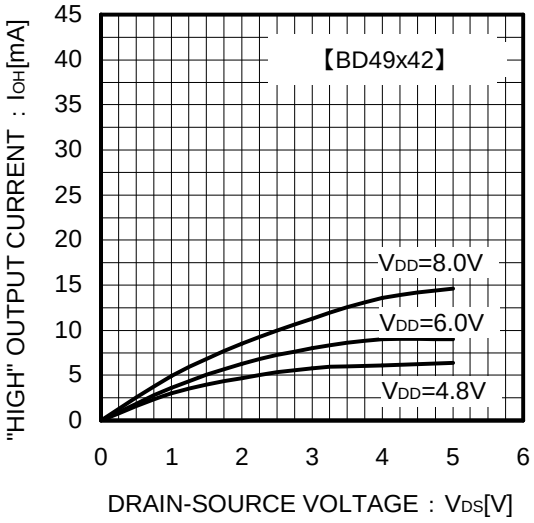

Fig.5 “High” Output Current

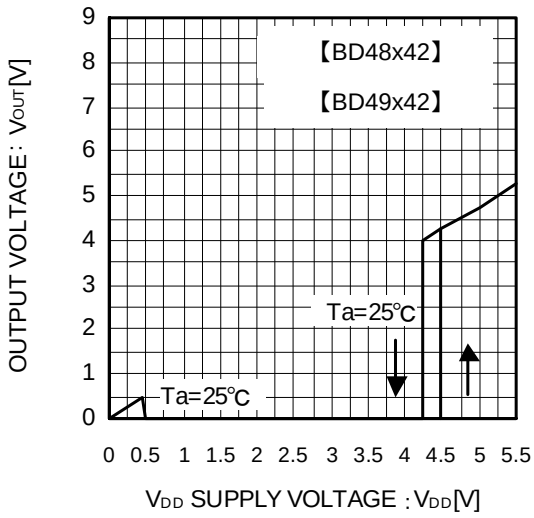

Fig.6 I/O Characteristics

© 2013 ROHM Co., Ltd. All rights reserved.

●**Typical Performance Curves – continued**

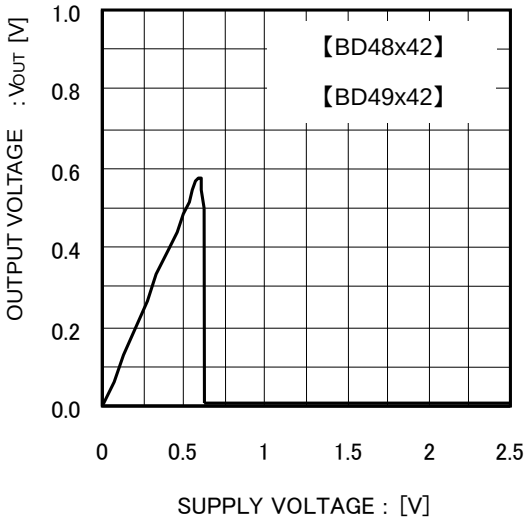

Fig.7 Operating Limit Voltage

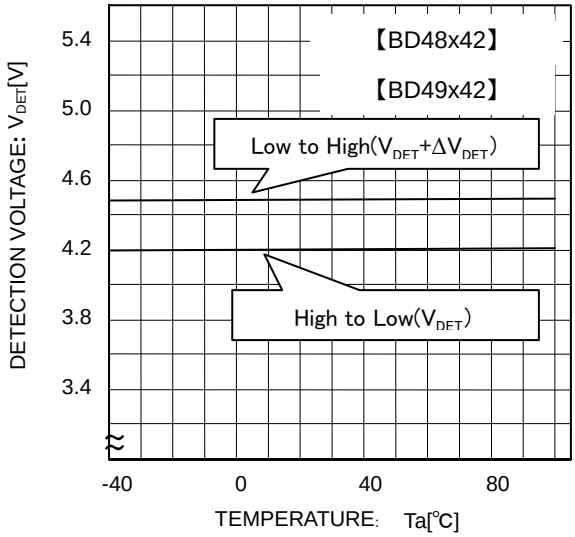

Fig.8 Detection Voltage Release Voltage

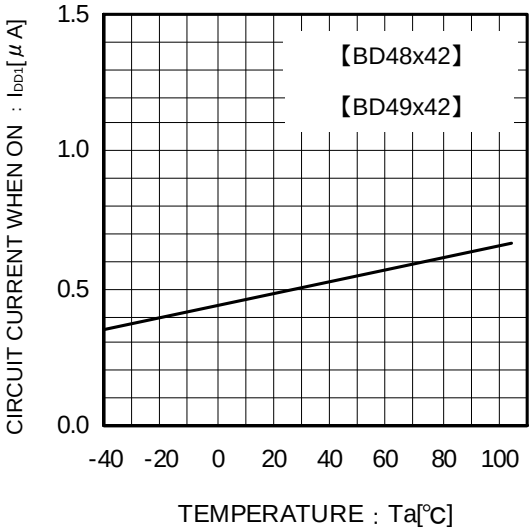

Fig.9 Circuit Current when ON

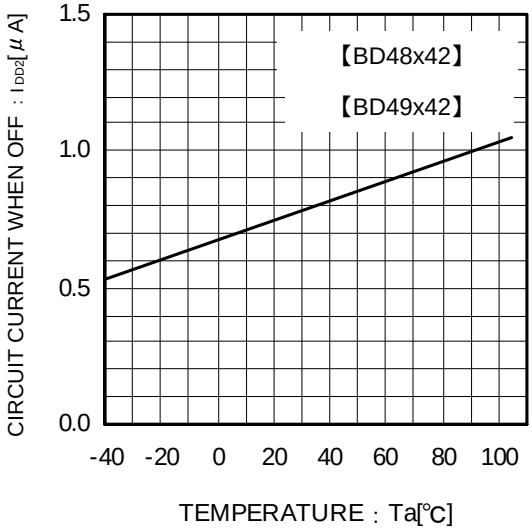

Fig.10 Circuit Current when OFF

© 2013 ROHM Co., Ltd. All rights reserved.

●**Typical Performance Curves – continued**

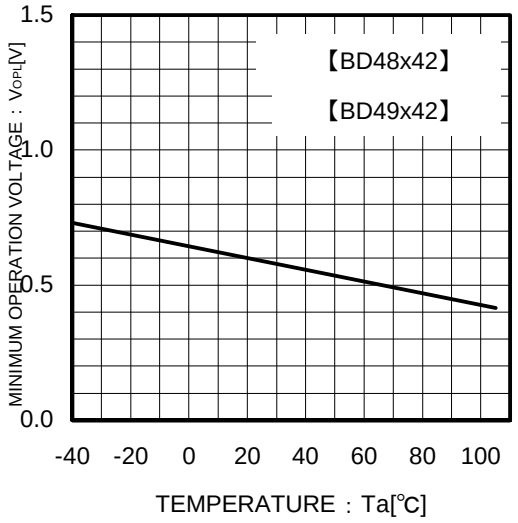

Fig.11 Operating Limit Voltage

© 2013 ROHM Co., Ltd. All rights reserved.

●Application Information

Explanation of Operation

For both the open drain type (Fig.12) and the CMOS output type (Fig.13), the detection and release voltages are used as threshold voltages. When the voltage applied to the V_{DD} pins reaches the appropriate threshold voltage, the V_{OUT} terminal voltage switches from either “High” to “Low” or from “Low” to “High”. Please refer to the Timing Waveform and Electrical Characteristics for information on hysteresis.

Because the BD48xxx series uses an open drain output type, it is necessary to connect a pull-up resistor to V_{DD} or another power supply if needed [The output “High” voltage (V_{OUT}) in this case becomes V_{DD} or the voltage of the other power supply].

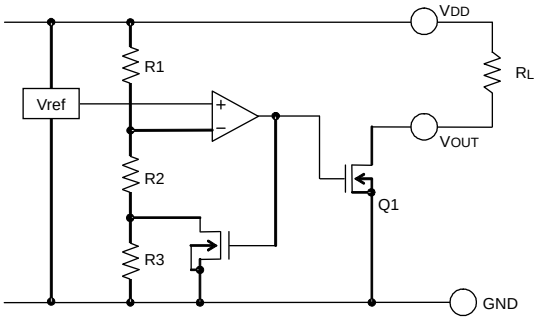

Fig.12 (BD48xxx series Internal Block Diagram)

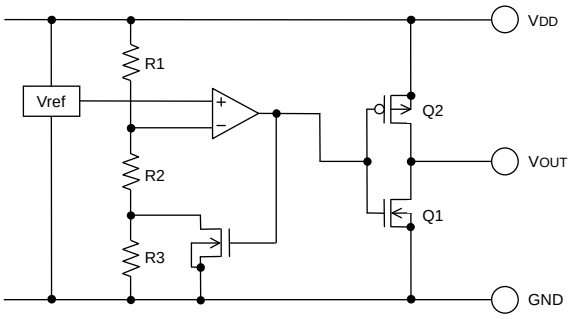

Fig.13 (BD49xxx series Internal Block Diagram)

Reference Data

Examples of Leading (t_{PLH}) and Falling (t_{PHL}) Output

Part Number	t_{PLH} (µs)	t_{PHL} (µs)
BD48x45	39.5	87.8
BD49x45	32.4	52.4
	V_{DD}=4.3V→5.1V	V_{DD}=5.1V→4.3V

*These data are for reference only.

The figures will vary with the application, so please check actual operating conditions before use.

Timing Waveform

Example: the following shows the relationship between the input voltages V_{DD} and the output voltage V_{OUT} when the input power supply voltage V_{DD} swept up and down (the circuits are those in Fig.12 and 13).

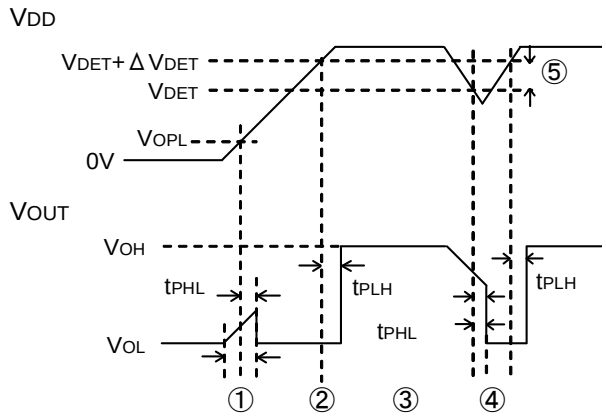

Fig.14 Timing Waveform

① When the power supply is turned on, the output is unstable from after over the operating limit voltage (V_{OPL}) until t_{PHL}. Therefore it is possible that the reset signal is not outputted when the rise time of V_{DD} is faster than t_{PHL}.

② When V_{DD} is greater than V_{OPL} but less than the reset release voltage (V_{DET} + ΔV_{DET}), the output voltages will switch to Low.

③ If V_{DD} exceeds the reset release voltage (V_{DET} + ΔV_{DET}), then V_{OUT} switches from L to H.

④ If V_{DD} drops below the detection voltage (V_{DET}) when the power supply is powered down or when there is a power supply fluctuation, V_{OUT} switches to L (with a delay of t_{PHL}).

⑤ The potential difference between the detection voltage and the release voltage is known as the hysteresis width (ΔV_{DET}). The system is designed such that the output does not toggle with power supply fluctuations within this hysteresis width, preventing malfunctions due to noise.

© 2013 ROHM Co., Ltd. All rights reserved.

●Circuit Applications

1) Examples of a common power supply detection reset circuit.

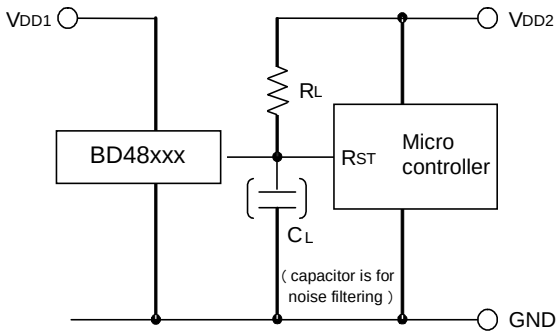

Fig.15 Open Drain Output Type

Application examples of BD48xxx series (Open Drain output type) and BD49xxx series (CMOS output type) are shown on the left.

CASE1: Power supply of the microcontroller (V_{DD2}) differs from the power supply of the reset detection IC (V_{DD1}).
Use an open drain output type (BD48xxx) device with a load resistance R_L attached as shown in figure 15.

CASE2: Power supply of the microcontroller (V_{DD1}) is same as the power supply of the reset detection IC (V_{DD1}).
Use a CMOS output type (BD49xxx) device or an open drain device with a pull up resistor between output and VDD1.

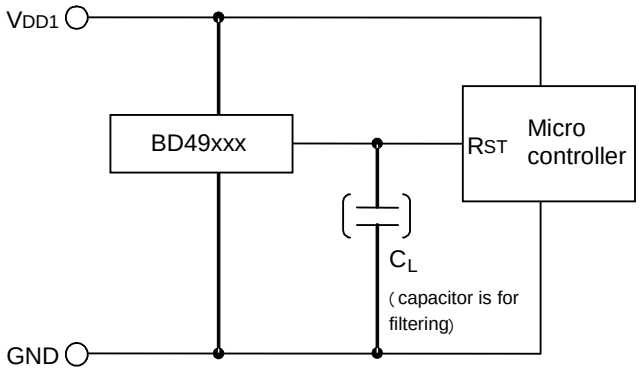

Fig.16 CMOS Output Type

When a capacitance C_L for noise filtering is connected to the V_{OUT} pin (the reset signal input terminal of the microcontroller), please take into account the rise and fall waveform of the output voltage (V_{OUT}).

The Electrical characteristics were measured using R_L= 470kΩ and C_L = 100pF.

2) The following is an example of a circuit application in which an OR connection between two types of detection voltage resets the microcontroller.

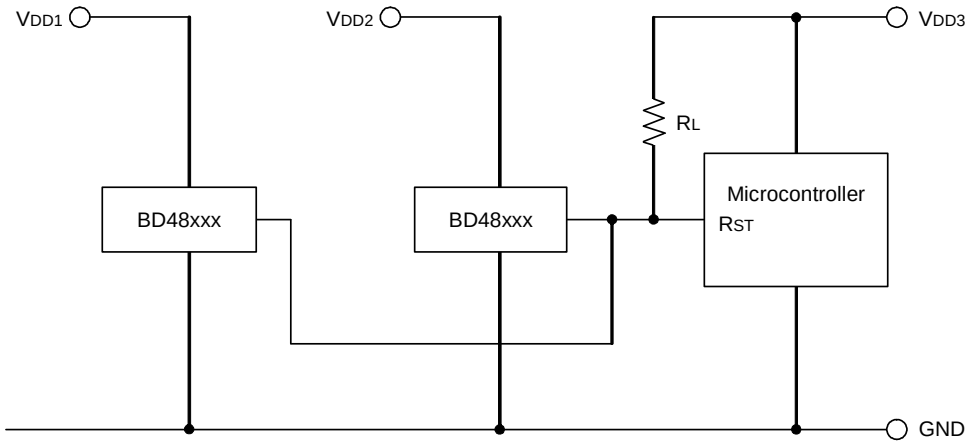

Fig.17

To reset the microcontroller when many independent power supplies are used in the system, OR connect an open drain output type (BD48xxx series) to the microcontroller's input with pull-up resistor to the supply voltage of the microcontroller (V_{DD3}) as shown in Fig. 17. By pulling-up to V_{DD3}, output "High" voltage of micro-controller power supply is possible.

© 2013 ROHM Co., Ltd. All rights reserved.

3) Examples of the power supply with resistor dividers

In applications wherein the power supply voltage of an IC comes from a resistor divider circuit, an in-rush current will flow into the circuit when the output level switches from “High” to “Low” or vice versa. In-rush current is a sudden surge of current that flows from the power supply (VDD) to ground (GND) as the output logic changes its state. This current flow may cause malfunction in the systems operation such as output oscillations, etc.

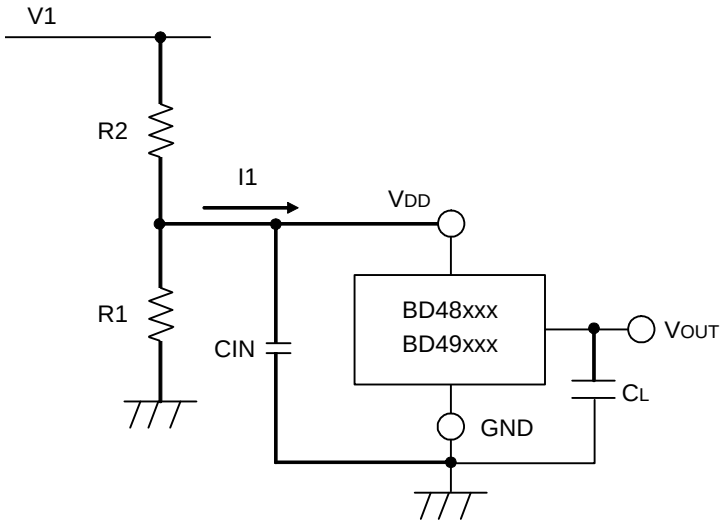

Fig.18

When an in-rush current (I1) flows into the circuit (Refer to Fig. 18) at the time when output switches from “Low” to “High”, a voltage drop of I1×R2 (input resistor) will occur in the circuit causing the VDD supply voltage to decrease. When the VDD voltage drops below the detection voltage, the output will switch from “High” to “Low”. While the output voltage is at “Low” condition, in-rush current will stop flowing and the voltage drop will be reduced. As a result, the output voltage will switches again from “Low” to “High” which causes an in-rush current and a voltage drop. This operation repeats and will result to oscillation.

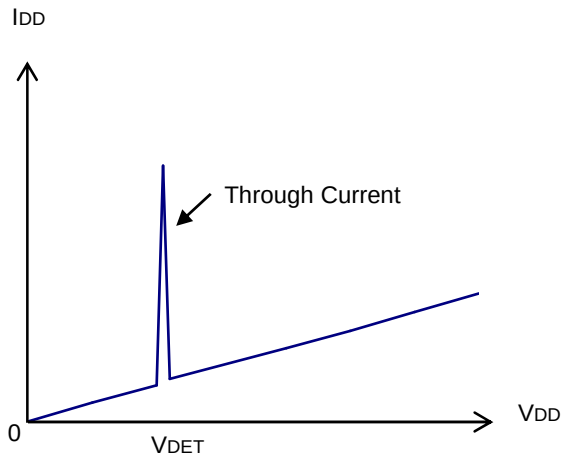

Fig.19 Current Consumption vs. Power Supply Voltage

© 2013 ROHM Co., Ltd. All rights reserved.

●Operational Notes

1) Absolute maximum ratings
Operating the IC over the absolute maximum ratings may damage the IC. The damage can either be a short circuit between pins or an open circuit between pins. Therefore, it is important to consider circuit protection measures, such as adding a fuse, in case the IC is operated over the absolute maximum ratings.

2) Ground Voltage
The voltage of the ground pin must be the lowest voltage of all pins of the IC at all operating conditions. Ensure that no pins are at a voltage below the ground pin at any time, even during transient condition.

3) Recommended operating conditions
These conditions represent a range within which the expected characteristics of the IC can be approximately obtained. The electrical characteristics are guaranteed under the conditions of each parameter.

4) Bypass Capacitor for Noise Rejection
To help reject noise, put a 1µF capacitor between V_{DD} pin and GND and 1000pF capacitor between V_{OUT} pin and GND. Be careful when using extremely big capacitor as transient response will be affected.

5) Short between pins and mounting errors
Be careful when mounting the IC on printed circuit boards. The IC may be damaged if it is mounted in a wrong orientation or if pins are shorted together. Short circuit may be caused by conductive particles caught between the pins.

6) Operation under strong electromagnetic field
Operating the IC in the presence of a strong electromagnetic field may cause the IC to malfunction.

7) The V_{DD} line impedance might cause oscillation because of the detection current.

8) A V_{DD} to GND capacitor (as close connection as possible) should be used in high V_{DD} line impedance condition.

9) Lower than the mininum input voltage puts the V_{OUT} in high impedance state, and it must be V_{DD} in pull up (V_{DD}) condition.

10) External parameters
The recommended parameter range for R_L is 10kΩ to 1MΩ. There are many factors (board layout, etc) that can affect characteristics. Please verify and confirm using practical applications.

11) Power on reset operation
Please note that the power on reset output varies with the V_{DD} rise time. Please verify the behavior in the actual operation.

12) Testing on application boards
When testing the IC on an application board, connecting a capacitor directly to a low-impedance output pin may subject the IC to stress. Always discharge capacitors completely after each process or step. The IC's power supply should always be turned off completely before connecting or removing it from the test setup during the inspection process. To prevent damage from static discharge, ground the IC during assembly and use similar precautions during transport and storage.

13) Rush current
When power is first supplied to the IC, rush current may flow instantaneously. It is possible that the charge current to the parasitic capacitance of internal photo diode or the internal logic may be unstable. Therefore, give special consideration to power coupling capacitance, power wiring, width of GND wiring, and routing of connections.

14) This IC has extremely high impedance terminals. Small leak current due to the uncleanness of PCB surface might cause unexpected operations. Application values in these conditions should be selected carefully. If 10MΩ leakage is assumed between the C_T terminal and the GND terminal, 1MΩ connection between the CT terminal and the V_{DD} terminal would be recommended. Also, if the leakage is assumed between the Vout terminal and the GND terminal, the pull up resistor should be less than 1/10 of the assumed leak resistance.

© 2013 ROHM Co., Ltd. All rights reserved.

Notice

Precaution on using ROHM Products

1. Our Products are designed and manufactured for application in ordinary electronic equipments (such as AV equipment, OA equipment, telecommunication equipment, home electronic appliances, amusement equipment, etc.). If you intend to use our Products in devices requiring extremely high reliability (such as medical equipment (Note 1), transport equipment, traffic equipment, aircraft/spacecraft, nuclear power controllers, fuel controllers, car equipment including car accessories, safety devices, etc.) and whose malfunction or failure may cause loss of human life, bodily injury or serious damage to property ("Specific Applications"), please consult with the ROHM sales representative in advance. Unless otherwise agreed in writing by ROHM in advance, ROHM shall not be in any way responsible or liable for any damages, expenses or losses incurred by you or third parties arising from the use of any ROHM's Products for Specific Applications.

(Note1) Medical Equipment Classification of the Specific Applications

JAPAN	USA	EU	CHINA
CLASSⅢ	CLASSⅢ	CLASSⅡb	CLASSⅢ
CLASSⅣ		CLASSⅢ	

2. ROHM designs and manufactures its Products subject to strict quality control system. However, semiconductor products can fail or malfunction at a certain rate. Please be sure to implement, at your own responsibilities, adequate safety measures including but not limited to fail-safe design against the physical injury, damage to any property, which a failure or malfunction of our Products may cause. The following are examples of safety measures:
   [a] Installation of protection circuits or other protective devices to improve system safety
   [b] Installation of redundant circuits to reduce the impact of single or multiple circuit failure

3. Our Products are designed and manufactured for use under standard conditions and not under any special or extraordinary environments or conditions, as exemplified below. Accordingly, ROHM shall not be in any way responsible or liable for any damages, expenses or losses arising from the use of any ROHM's Products under any special or extraordinary environments or conditions. If you intend to use our Products under any special or extraordinary environments or conditions (as exemplified below), your independent verification and confirmation of product performance, reliability, etc, prior to use, must be necessary:
   [a] Use of our Products in any types of liquid, including water, oils, chemicals, and organic solvents
   [b] Use of our Products outdoors or in places where the Products are exposed to direct sunlight or dust
   [c] Use of our Products in places where the Products are exposed to sea wind or corrosive gases, including Cl_2, H_2S, NH_3, SO_2, and NO_2
   [d] Use of our Products in places where the Products are exposed to static electricity or electromagnetic waves
   [e] Use of our Products in proximity to heat-producing components, plastic cords, or other flammable items
   [f] Sealing or coating our Products with resin or other coating materials
   [g] Use of our Products without cleaning residue of flux (even if you use no-clean type fluxes, cleaning residue of flux is recommended); or Washing our Products by using water or water-soluble cleaning agents for cleaning residue after soldering
   [h] Use of the Products in places subject to dew condensation

4. The Products are not subject to radiation-proof design.

5. Please verify and confirm characteristics of the final or mounted products in using the Products.

6. In particular, if a transient load (a large amount of load applied in a short period of time, such as pulse. is applied, confirmation of performance characteristics after on-board mounting is strongly recommended. Avoid applying power exceeding normal rated power; exceeding the power rating under steady-state loading condition may negatively affect product performance and reliability.

7. De-rate Power Dissipation (Pd) depending on Ambient temperature (Ta). When used in sealed area, confirm the actual ambient temperature.

8. Confirm that operation temperature is within the specified range described in the product specification.

9. ROHM shall not be in any way responsible or liable for failure induced under deviant condition from what is defined in this document.

Precaution for Mounting / Circuit board design

1. When a highly active halogenous (chlorine, bromine, etc.) flux is used, the residue of flux may negatively affect product performance and reliability.

2. In principle, the reflow soldering method must be used; if flow soldering method is preferred, please consult with the ROHM representative in advance.

For details, please refer to ROHM Mounting specification

© 2014 ROHM Co., Ltd. All rights reserved.

Precautions Regarding Application Examples and External Circuits

1. If change is made to the constant of an external circuit, please allow a sufficient margin considering variations of the characteristics of the Products and external components, including transient characteristics, as well as static characteristics.

2. You agree that application notes, reference designs, and associated data and information contained in this document are presented only as guidance for Products use. Therefore, in case you use such information, you are solely responsible for it and you must exercise your own independent verification and judgment in the use of such information contained in this document. ROHM shall not be in any way responsible or liable for any damages, expenses or losses incurred by you or third parties arising from the use of such information.

Precaution for Electrostatic

This Product is electrostatic sensitive product, which may be damaged due to electrostatic discharge. Please take proper caution in your manufacturing process and storage so that voltage exceeding the Products maximum rating will not be applied to Products. Please take special care under dry condition (e.g. Grounding of human body / equipment / solder iron, isolation from charged objects, setting of Ionizer, friction prevention and temperature / humidity control).

Precaution for Storage / Transportation

1. Product performance and soldered connections may deteriorate if the Products are stored in the places where:
   [a] the Products are exposed to sea winds or corrosive gases, including Cl2, H2S, NH3, SO2, and NO2
   [b] the temperature or humidity exceeds those recommended by ROHM
   [c] the Products are exposed to direct sunshine or condensation
   [d] the Products are exposed to high Electrostatic

2. Even under ROHM recommended storage condition, solderability of products out of recommended storage time period may be degraded. It is strongly recommended to confirm solderability before using Products of which storage time is exceeding the recommended storage time period.

3. Store / transport cartons in the correct direction, which is indicated on a carton with a symbol. Otherwise bent leads may occur due to excessive stress applied when dropping of a carton.

4. Use Products within the specified time after opening a humidity barrier bag. Baking is required before using Products of which storage time is exceeding the recommended storage time period.

Precaution for Product Label

QR code printed on ROHM Products label is for ROHM's internal use only.

Precaution for Disposition

When disposing Products please dispose them properly using an authorized industry waste company.

Precaution for Foreign Exchange and Foreign Trade act

Since our Products might fall under controlled goods prescribed by the applicable foreign exchange and foreign trade act, please consult with ROHM representative in case of export.

Precaution Regarding Intellectual Property Rights

1. All information and data including but not limited to application example contained in this document is for reference only. ROHM does not warrant that foregoing information or data will not infringe any intellectual property rights or any other rights of any third party regarding such information or data. ROHM shall not be in any way responsible or liable for infringement of any intellectual property rights or other damages arising from use of such information or data.:

2. No license, expressly or implied, is granted hereby under any intellectual property rights or other rights of ROHM or any third parties with respect to the information contained in this document.

Other Precaution

1. This document may not be reprinted or reproduced, in whole or in part, without prior written consent of ROHM.

2. The Products may not be disassembled, converted, modified, reproduced or otherwise changed without prior written consent of ROHM.

3. In no event shall you use in any way whatsoever the Products and the related technical information contained in the Products or this document for any military purposes, including but not limited to, the development of mass-destruction weapons.

4. The proper names of companies or products described in this document are trademarks or registered trademarks of ROHM, its affiliated companies or third parties.

© 2014 ROHM Co., Ltd. All rights reserved.

General Precaution

1. Before you use our Products, you are requested to carefully read this document and fully understand its contents. ROHM shall not be in any way responsible or liable for failure, malfunction or accident arising from the use of any ROHM's Products against warning, caution or note contained in this document.

2. All information contained in this document is current as of the issuing date and subject to change without any prior notice. Before purchasing or using ROHM's Products, please confirm the latest information with a ROHM sales representative.

3. The information contained in this document is provided on an "as is" basis and ROHM does not warrant that all information contained in this document is accurate and/or error-free. ROHM shall not be in any way responsible or liable for any damages, expenses or losses incurred by you or third parties resulting from inaccuracy or errors of or concerning such information.

© 2014 ROHM Co., Ltd. All rights reserved.