Automotive IPS series

1ch High-side switch

BD1Hx500 Series

Features

- Built-in overcurrent protection circuit
- Built-in Thermal Shut Down(TSD)
- Built-in Open Load Detection circuit(When Output is OFF)
- Possibility to control directly from CMOS logic IC
- Low standby current
- Built-in Under Voltage Lock Out circuit
- Built-in diagnostic(ST) output function
- Low On resistance of $R_{DS(ON)}$=500mΩ(Typ) (V_{DD}=12V, Ta=25°C, Io=0.25A)
- Monolithic power IC that has a built in control part (CMOS) and a power MOS FET on 1chip
- 1ch High-side switch for the mechanical relay coil drive
- AEC-Q100 qualified (1)
  (1) Grade 1

General Description

BD1HC/D500 Series is an Automotive 1ch High-Side switch.
It has a built-in overcurrent protection circuit, Thermal Shut Down (TSD) circuit, Open Load Detection circuit, Under Voltage Lock Out circuit, and has diagnostic (ST) output function at the time during abnormal detection.

Application

- For automotive (Air conditioner, body equipment, and meter, etc.)

Product Summary

Operating voltage	4V to 18V
On-state resistance (25°C, Typ)	500mΩ
Overcurrent limit (Typ)	1.45A
Active clamp energy (25°C)	33mJ

Package

HTSOP-J8	4.90mm x 6.00mm x 1.00mm
HSON8	2.90mm x 3.00mm x 0.60mm
MSOP8	2.90mm x 4.00mm x 0.90mm

HTSOP-J8 HSON 8 MSOP 8

Typical Application Circuit

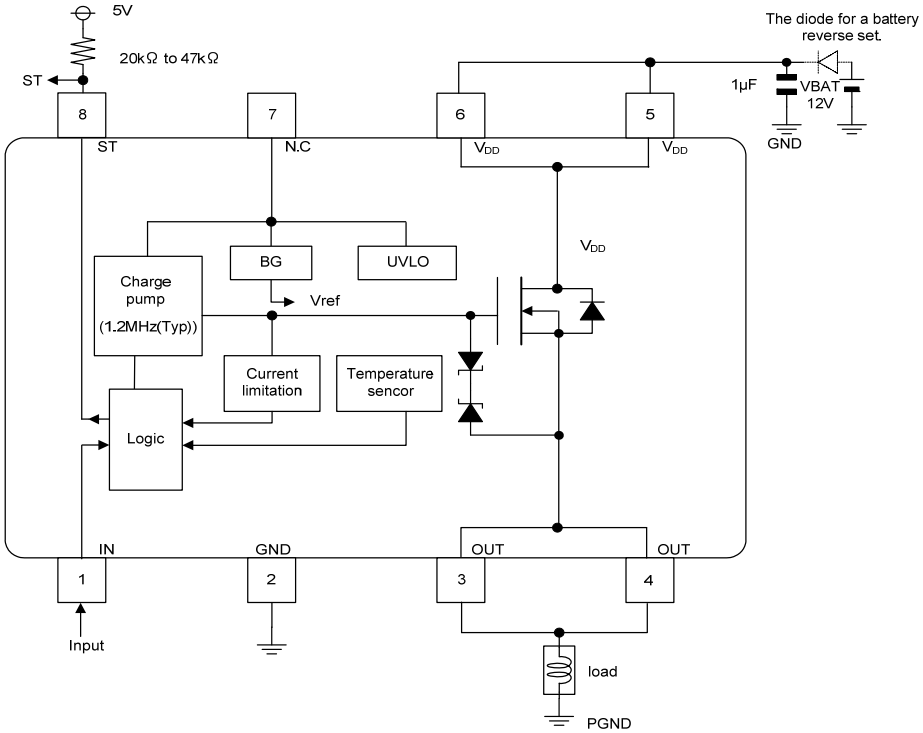

○Product structure : Silicon monolithic integrated circuit ○This product is not designed protection against radioactive rays

© 2015 ROHM Co., Ltd. All rights reserved.

Pin Descriptions

Pin	Symbol	Function
1	IN	Input terminal. The pull-down resistor is internally connected.
2	GND	Earth terminal.
3, 4	OUT	Output terminal. When the load becomes in a short-circuit state and if the current exceeds overcurrent detection value of 0.8A (Min) the current flowing in the output pin will be limited due IC protection.
5, 6	V_{DD}	Power-supply terminal.
7	N.C	N.C
8	ST	Self-diagnostic output terminal. "L" is becomes the output state during overcurrent, overheating and open load detection conditions. Please refer to Diagnostic Output Truth Table on page 5. The circuit is composed of an open drain N channel MOS.
Cooling Tab (1)	TAB	Since it has connected with sub of IC, please connect the heat dissipation metal to external GND potential. (HTSOP-J8,HSON8)

(1)MSOP8 does not have Cooling Tab.

Pin Configurations

HTSOP-J8
(TOP VIEW)

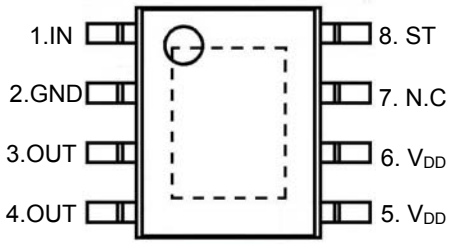

HSON8
(TOP VIEW)

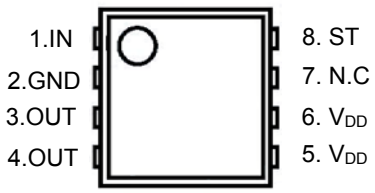

MSOP8
(TOP VIEW)

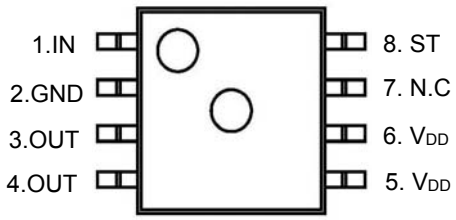

Product Line-up

Product Name	PKG	TSD Function	On-state Resistance (25°C, Typ)
BD1HC500EFJ-C	HTSOP-J8	Off-latch	500mΩ
BD1HC500HFN-C	HSON 8		
BD1HC500FVM-C	MSOP 8		
BD1HD500EFJ-C	HTSOP-J8	Self-restart	
BD1HD500HFN-C	HSON 8		
BD1HD500FVM-C	MSOP 8		

© 2015 ROHM Co., Ltd. All rights reserved.

Absolute Maximum Ratings

Parameter	Symbol	Rating	Unit
Voltage between drain and source	V_{DS}	44.5 (Internal limitation)	V
Power supply voltage	V_{DD}	40	V
Input voltage	V_{IN}	-0.3 to +12 (1)	V
Diagnostic output voltage	V_{ST}	-0.3 to +15 (1)	V
Output current (DC)	I_{OD}	0.8 (2)	A
Output current (Pulse)	I_{OP}	Internal limitation (3)	A
Diagnostic output current	I_{ST}	1	mA
Power Consumption	P_d	2.100 (HTSOP-J8) (4)	W
		1.750(HSON 8) (5)	
		0.587 (MSOP 8) (6)	
Operating temperature range	T_{opr}	$-40 \leq T_{opr} < +150$	°C
Storage temperature range	T_{stg}	-55 to +150	°C
Maximum junction temperature	T_{jmax}	150	°C
Active clamp energy (single pulse)	E_{AV}	33	mJ

Operating Voltage Ratings

Parameter	Symbol	Rating	Unit
Operating voltage	V_{DD}	4 to 18	V

(1) However, $V_{DD} \geq V_{IN}$
(2) However, exceed neither Pd nor ASO.
(3) Because of overcurrent protection circuit. (Refer to P11 Figure 20)
(4) IC mounted on ROHM standard board (70×70×1.6[mm], copper area 70×70[mm], glass epoxy 2 layer board). Derate by 16.8mW above 25°C
(5) IC mounted on ROHM standard board (70×70×1.6[mm], copper area 70×70[mm], glass epoxy 2 layer board). Derate by 14.0mW above 25°C
(6) IC mounted on ROHM standard board (70×70×1.6[mm], copper area 70×70[mm], glass epoxy 1 layer board). Derate by 4.7mW above 25°C.

Heat Dissipation Characteristic

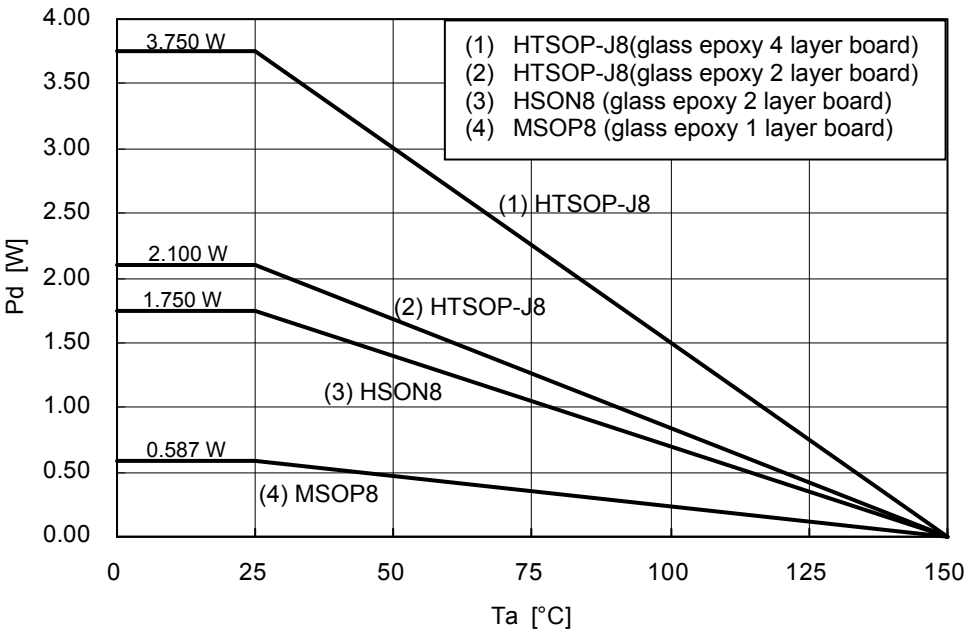

(HTSOP-J8) (1)IC mounted on ROHM standard board (70×70×1.6[mm], copper area 70×70[mm], glass epoxy 4 layer board). Derate by 30mW/°C above 25°C.
(2)IC mounted on ROHM standard board (70×70×1.6[mm], copper area 70×70[mm], glass epoxy 2 layer board). Derate by 16.8mW/°C above 25°C.
(HSON 8) (3)IC mounted on ROHM standard board (70×70×1.6[mm], copper area 70×70[mm], glass epoxy 2 layer board). Derate by 14.0mW/°C above 25°C.
(MSOP 8) (4)IC mounted on ROHM standard board (70×70×1.6[mm],copper area 70×70[mm], glass epoxy 1 layer board). Derate by 4.7mW/°C above 25°C.

© 2015 ROHM Co., Ltd. All rights reserved.

Electrical Characteristics (unless otherwise specified, V_{DD}=4V to 18V, -40°C ≤ T_j ≤ +150°C)

Parameter		Symbol	Target value			Unit	Conditions
			Min	Typ	Max		
[Power Supply Block]							
Standby current		I_{DDS1}	-	0.1	10	μA	V_{DD}=12V,V_{IN}=0V, V_{OUT}=0V,Tj=25°C
		I_{DDS2}	-	-	220	μA	V_{DD}=12V,V_{IN}=0V, V_{OUT}=0V,Tj=150°C
Operating current		I_{DD}	-	1.5	3.0	mA	V_{DD}=12V,V_{IN}=5V, V_{OUT}=open
Under Voltage Lock Out (UVLO) Threshold		V_{UVLO}	-	3.0	3.6	V	
[Input Block]							
H level input voltage		$V_{IN(H)}$	3.0	-	-	V	
L level input voltage		$V_{IN(L)}$	-	-	1.0	V	
Input hysteresis		$V_{IN(HYS)}$	-	0.3	-	V	
H level input current		$I_{IN(H)}$	-	50	100	μA	V_{IN}=5V
L level input current		$I_{IN(L)}$	-10	-	10	μA	V_{IN}=0V
[Power MOS Output]							
Output ON resistance		$R_{DS(ON)}$	-	500	650	mΩ	V_{DD}=12V,I_{OUT}=0.25A,Tj=25°C
		$R_{DS(ON)}$	-	900	1200	mΩ	V_{DD}=12V,I_{OUT}=0.25A,Tj=150°C
Output leak current		$I_{L(OFF)}$	-	-	5	μA	V_{IN}=0V, Tj=25°C
		$I_{L(OFF)}$	-	-	200	μA	V_{IN}=0V, Tj=150°C
Switching time		t_{ON}	-	13	25	μs	V_{DD}=12V ,R_L=47Ω,Tj=25°C Figure16
		t_{OFF}	-	9	25	μs	V_{DD}=12V ,R_L=47Ω,Tj=25°C Figure16
Slew rate on		dV/dt_{ON}	-	3	6	V/μs	V_{DD}=12V ,R_L=47Ω,Tj=25°C Figure16
Slew rate off		$-dV/dt_{OFF}$	-	3	6	V/μs	V_{DD}=12V ,R_L=47Ω,Tj=25°C Figure16
Output clamp voltage		V_{CL}	-8	-6.0	-4.5	V	V_{IN} =0V,I_{OUT}=100mA Figure17
[Diagnostic Output]							
Diagnostic output voltage	"L" level	V_{STL}	-	-	0.4	V	V_{IN}=5V,I_{ST}=0.1mA
Diagnostic output current	"H" level	I_{STH}	-	-	10	μA	V_{IN}=0V,V_{ST}=12V

© 2015 ROHM Co., Ltd. All rights reserved.

Electrical Characteristics (unless otherwise specified, V_{DD}=4V to 18V, -40°C ≤ T_j ≤ 150°C)

Parameter		Symbol	Target value			Unit	Conditions
			Min	Typ	Max		
[Protect Circuit]							
Overcurrent protection		I_{LIM}	0.8	1.45	2.0	A	
Diagnostic output delay time(OCP)	ON	t_{DHL}	-	20	100	μs	Diagnostic output delay time(OCP) Figure20
	OFF	t_{DLH}	-	100	200	μs	V_{DD}=12V, R_L=∞ to 4Ω Figure 20
Open Load Detection threshold (1)		V_{OPEN}	1.3	2.8	4.0	V	V_{IN} =0V
Open Load Detection delay time		T_{OPEN}	100	300	1000	μs	V_{IN} =5V to 0V Figure21

(1) In order to detect the voltage, an external resistance (R_{ext}) of 130kΩ (Typ) is required between V_{DD} and OUT pins. At worst condition, the following resistance is recommended.

V_{DD}	Rext
12 V	Under 200kΩ
6 V	Under 50kΩ
5 V	Under 25kΩ

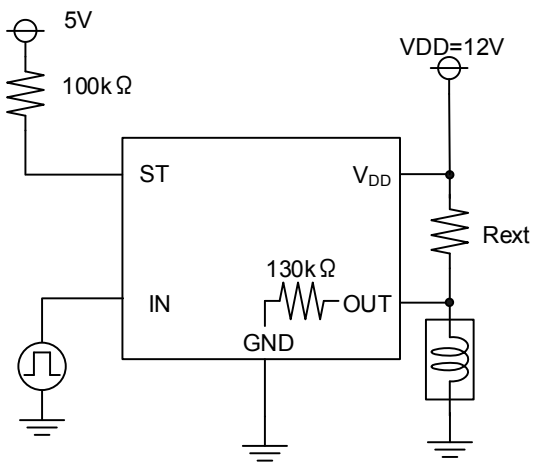

Terms

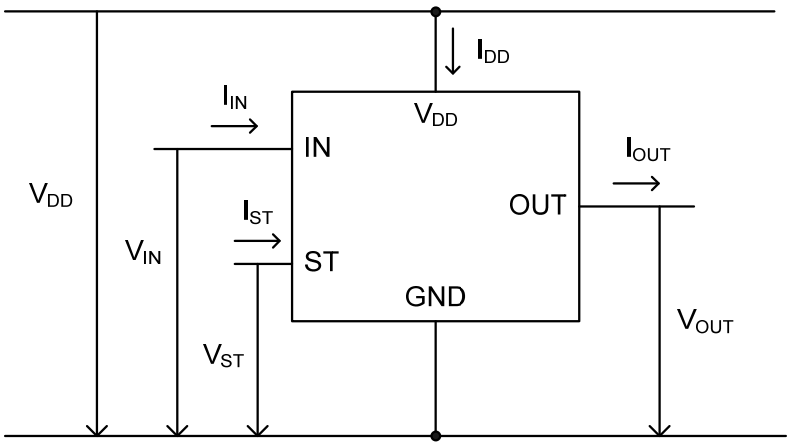

Figure 1. Terms

© 2015 ROHM Co., Ltd. All rights reserved.

Measuring circuit

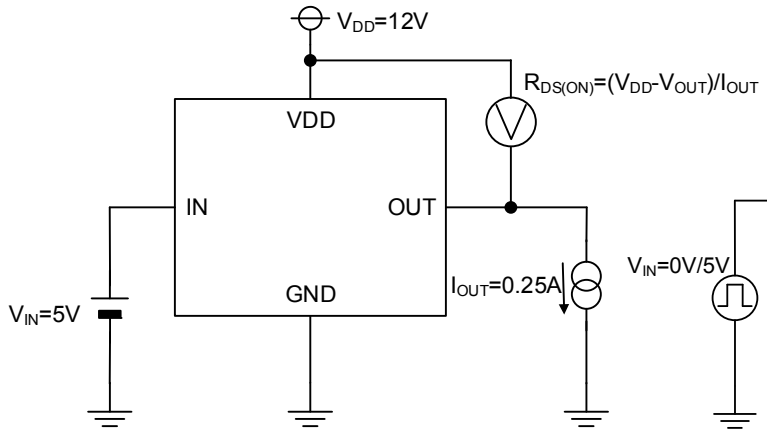

Figure 2. R_{ON} measuring circuit

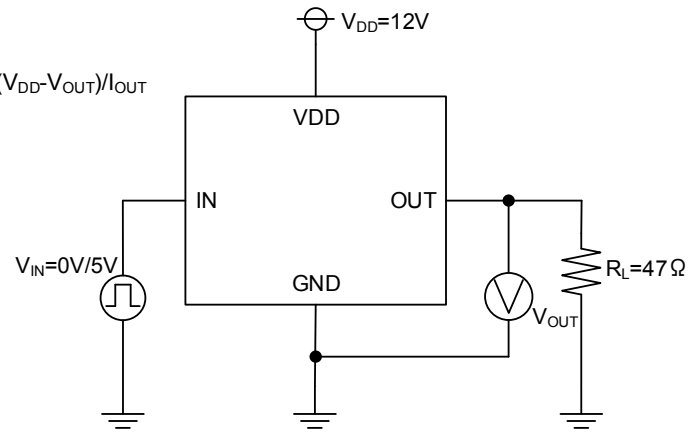

Figure 3. Switching time measuring circuit

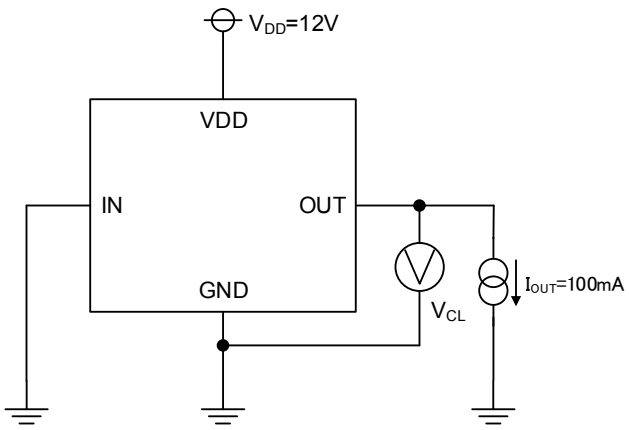

Figure 4. Output clamp voltage measuring circuit

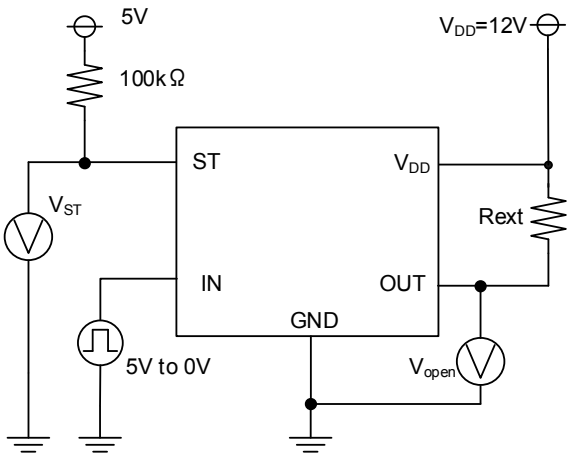

Figure 5. Open Load Detection threshold measuring circuit

© 2015 ROHM Co., Ltd. All rights reserved.

Diagnostic Output Truth Table

V_{IN}	Tj	OUTPUT		Mode	V_{ST}	Output state
		V_{OUT}	I_{OUT}			
H	Tj ≤ 175°C (Typ)	-	I_{OUT} < 1.45A(Typ)	Normal	H	ON
			I_{OUT} ≥ 1.45A(Typ)	Overcurrent protect	L	OFF (1)
	Tj > 175°C (Typ)	-	-	Overheating protect	L	OFF(1)
L	-	H (Over 2.8V(Typ))	-	Open protect	L	OFF(1)
		L	-	Stand by	H	OFF(1)

(1)OFF : 130kΩ(Typ) is built in between OUT and GND.

© 2015 ROHM Co., Ltd. All rights reserved.

Typical Performance Curves (unless otherwise specified, V_{DD}=12V, V_{IN}=5V, Tj=25°C)

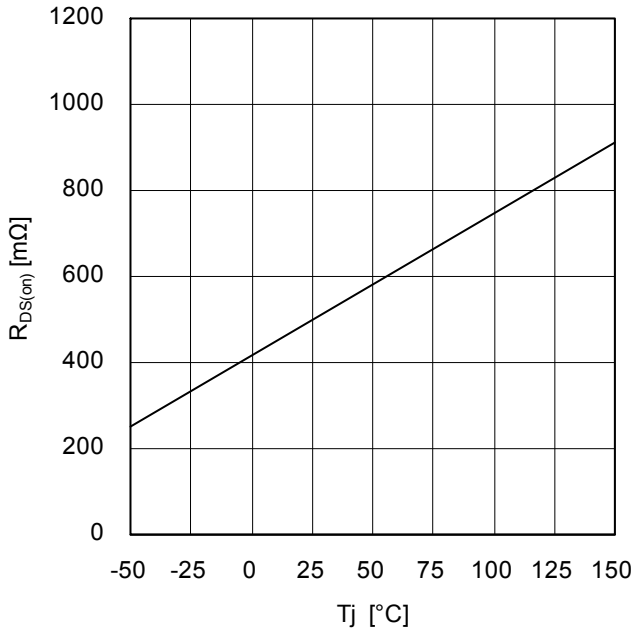

Figure 6. Output ON Resistance Characteristic [temperature characteristic]

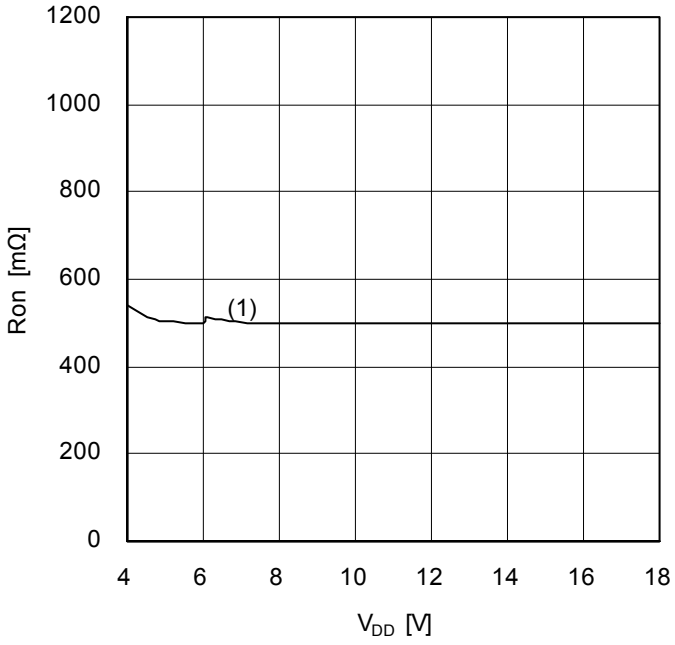

Figure 7. Output ON Resistance Characteristic [Power supply voltage characteristic]

(1)Since the reference voltage of a charge pump circuit changes at the time of reduced voltage, ON resistance changes about 3% in the 6.5V neighborhood.

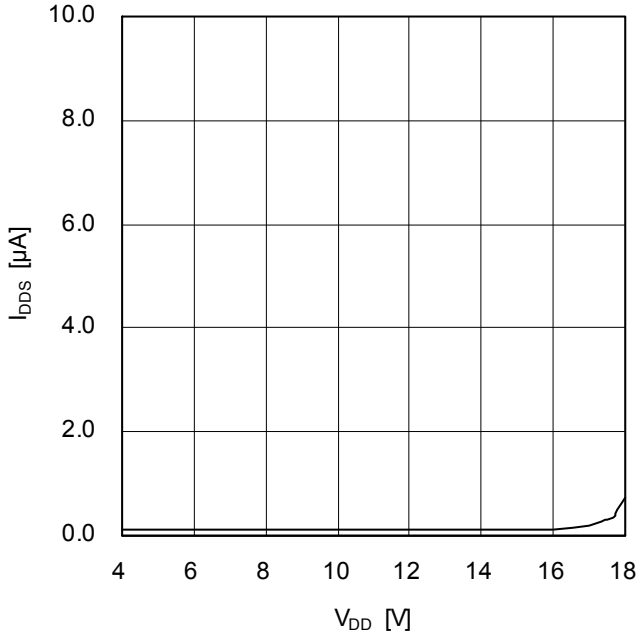

Figure 8. Standby Current Characteristic (V_{IN}=0V)

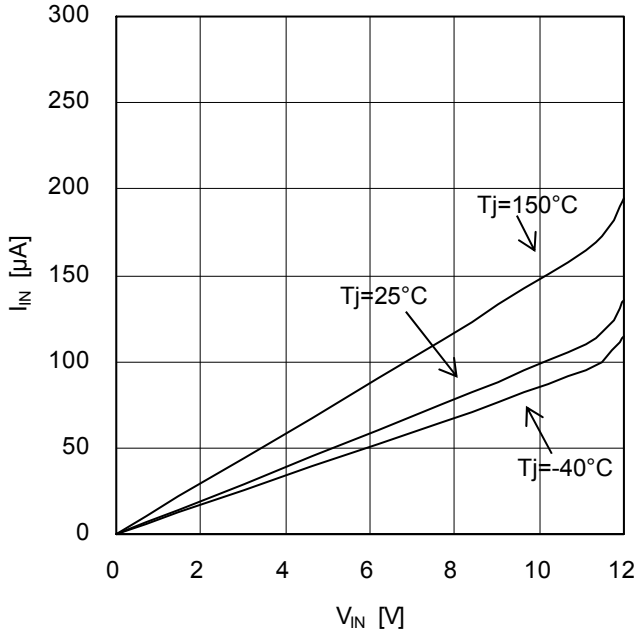

Figure 9. Input Current Characteristic

© 2015 ROHM Co., Ltd. All rights reserved.

Typical Performance Curves (unless otherwise specified, V_{DD}=12V, V_{IN}=5V, Tj=25°C)

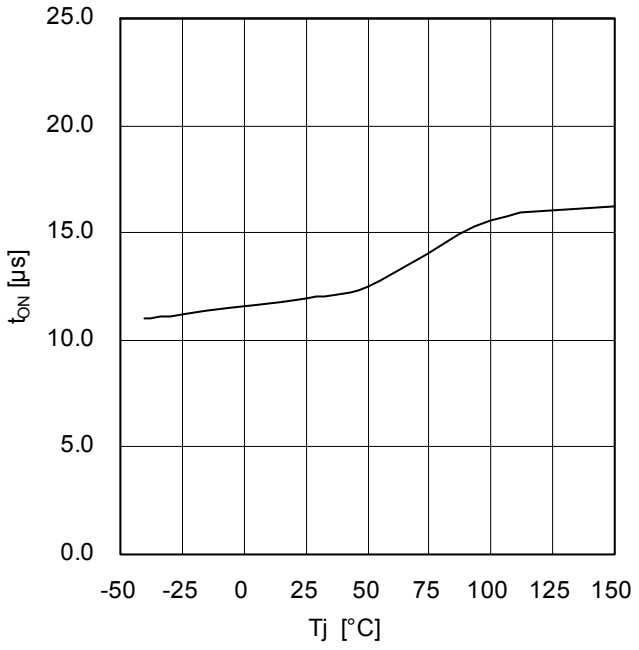

Figure 10. Switching Time (t_{ON})[temperature characteristic]

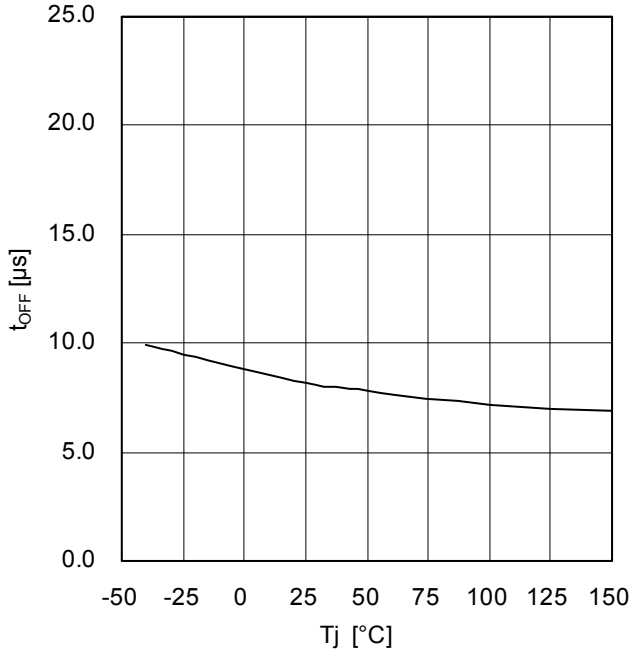

Figure 11. Switching Time (t_{OFF})[temperature characteristic]

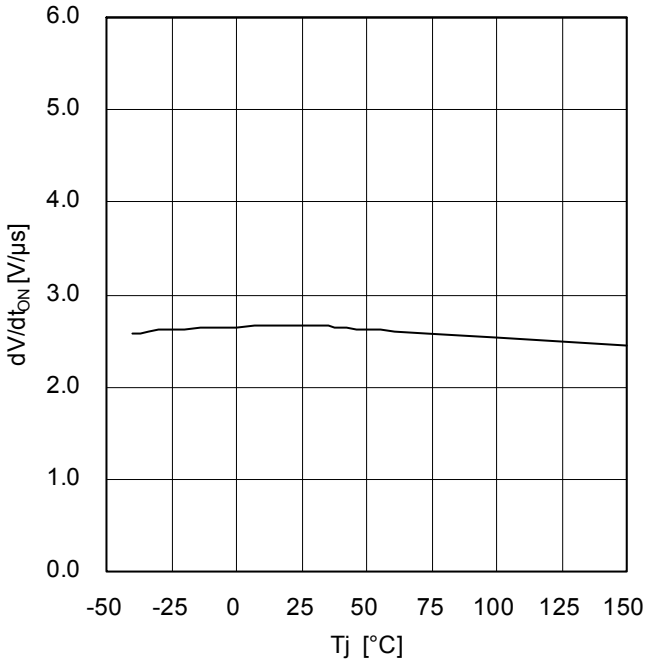

Figure 12. Slew Rate ON [temperature characteristic]

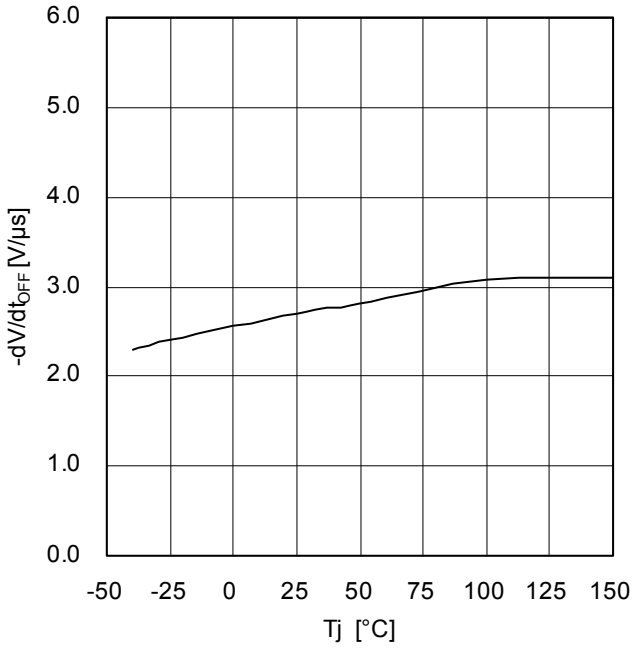

Figure 13. Slew Rate OFF [temperature characteristic]

© 2015 ROHM Co., Ltd. All rights reserved.

Typical Performance Curves (unless otherwise specified, V_{DD}=12V, V_{IN}=5V, Tj=25°C)

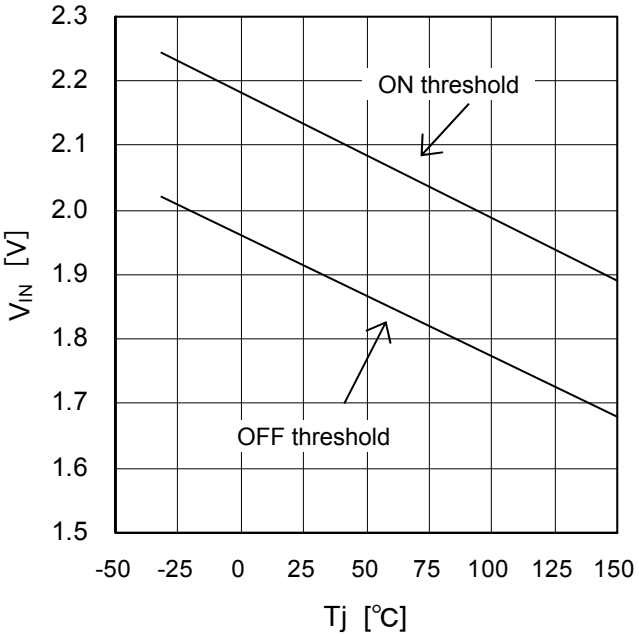

Figure 14. Input Voltage Threshold Characteristic

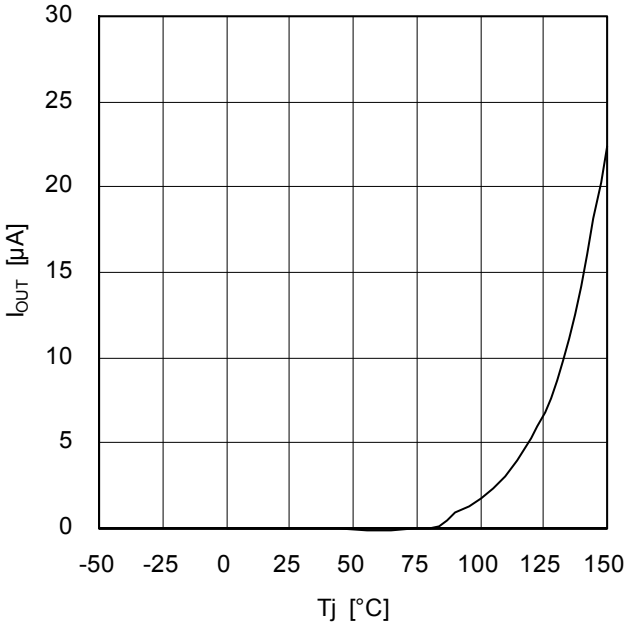

Figure 15. Output Leak Current [temperature characteristic] (V_{IN}=0V)

Switching time measuring

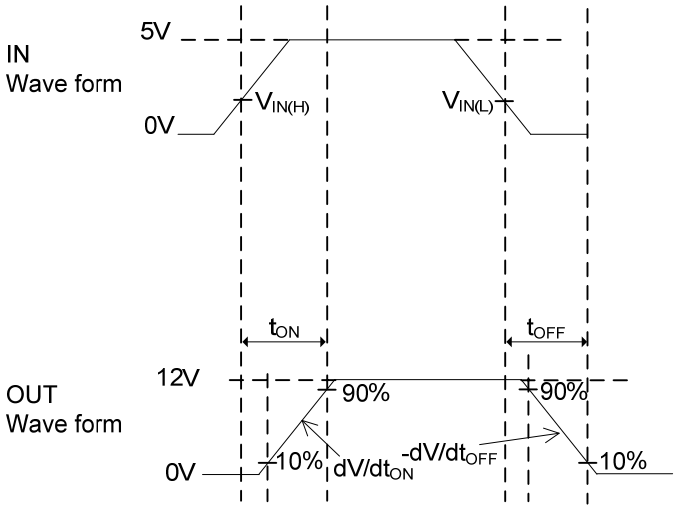

Figure 16. Switching time

Active clamp energy timing chart

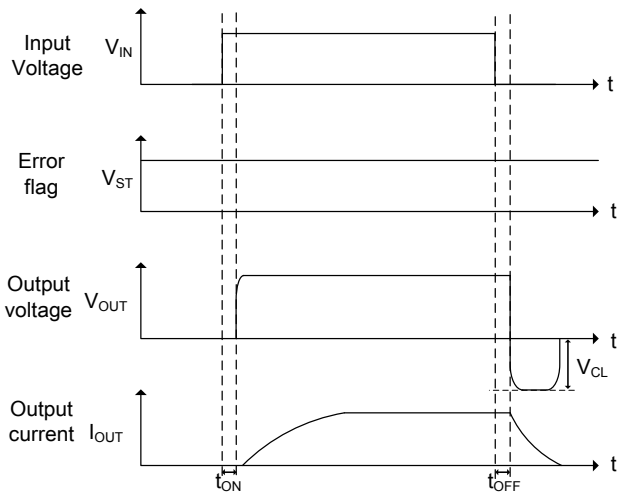

Figure 17. Active Clamp Energy Timing Chart

© 2015 ROHM Co., Ltd. All rights reserved.

Protect function timing chart

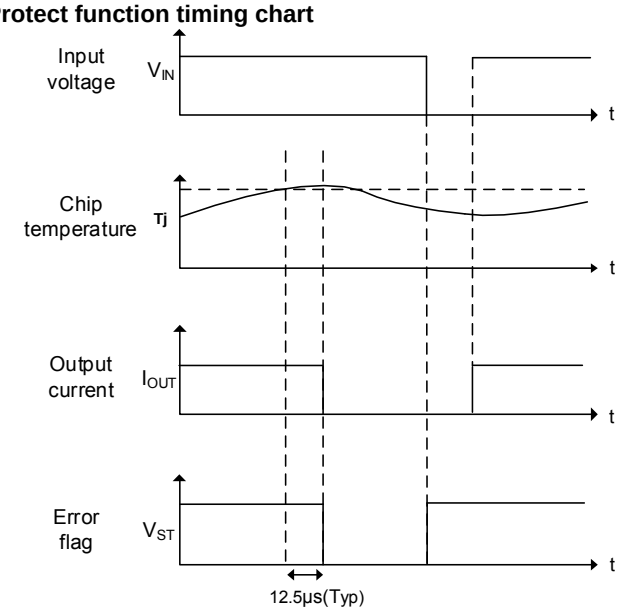

Figure 18. BD1HC500 Off-latch Overheat Protection Timing Chart

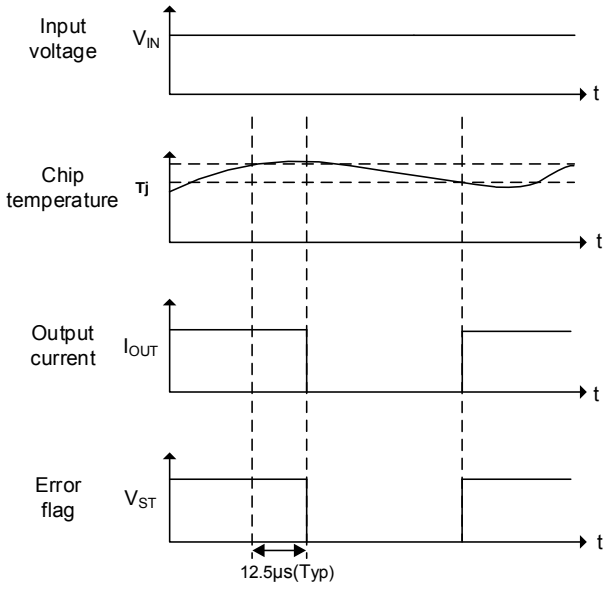

Figure 19. BD1HD500 Self-restart Overheat Protection Timing Chart

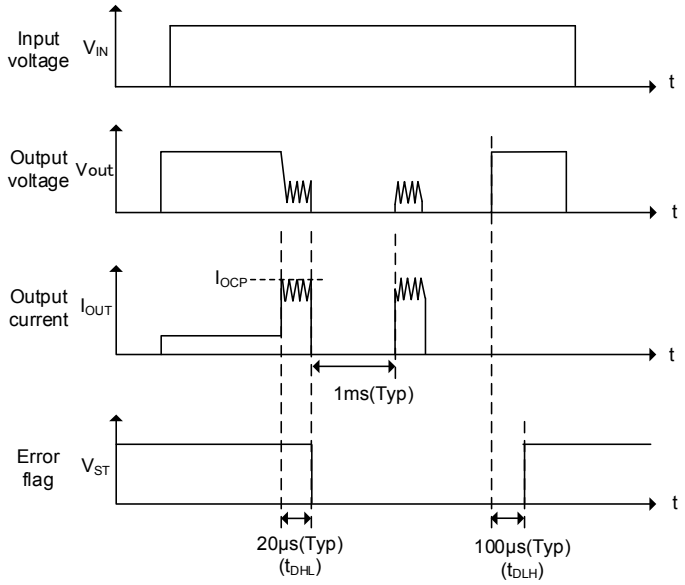

Figure 20. Overcurrent Protect Timing Chart

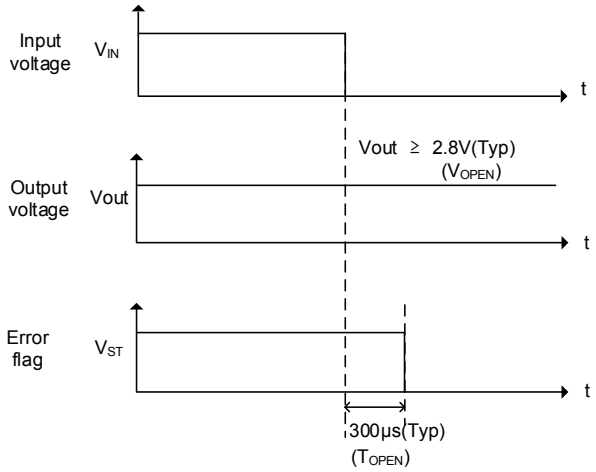

Figure 21. Open Load Detection Timing Chart

© 2015 ROHM Co., Ltd. All rights reserved.

I/O equivalence circuits

Pin	Symbol	I/O equivalence circuits
1	IN	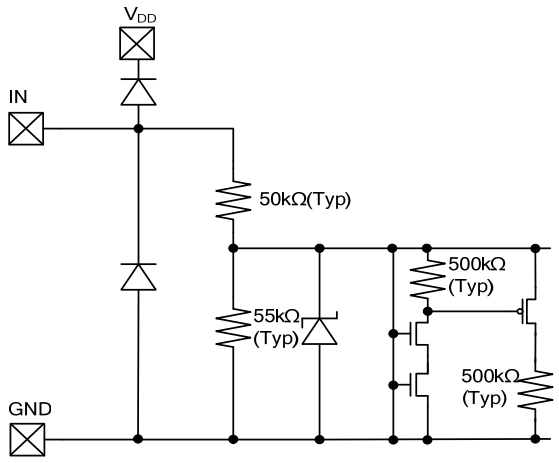
2	GND	
3, 4 5, 6	OUT V_{DD}	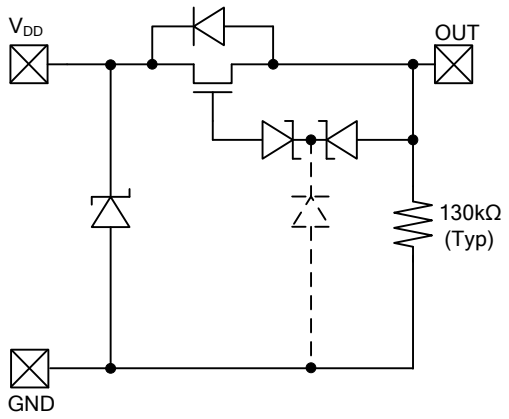
8	ST	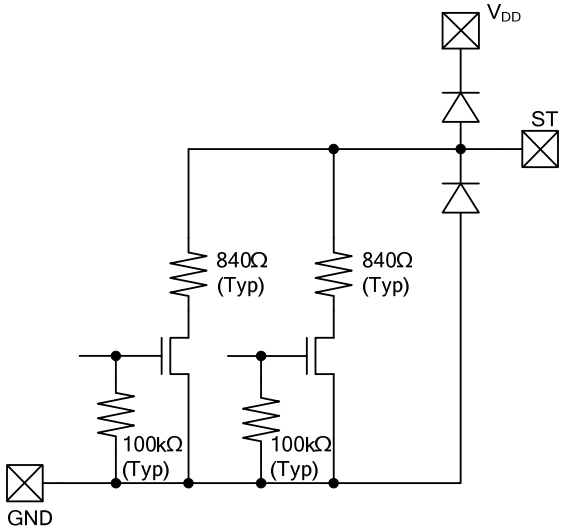
Cooling Tab	TAB	

© 2015 ROHM Co., Ltd. All rights reserved.

Ordering Information

B D 1 H x 5 0 0 F V M - CTR

Series
C:TSD Off-latch
D:TSD Self-restart

PKG
EFJ: HTSOP-J8
HFN:HSON8
FVM: MSOP8

Packaging and forming specification
E2:Embossed tape and reel
(HTSOP-J8)
TR:Embossed tape and reel
(MSOP 8,HSON 8)
C: High reliability

Marking Diagram

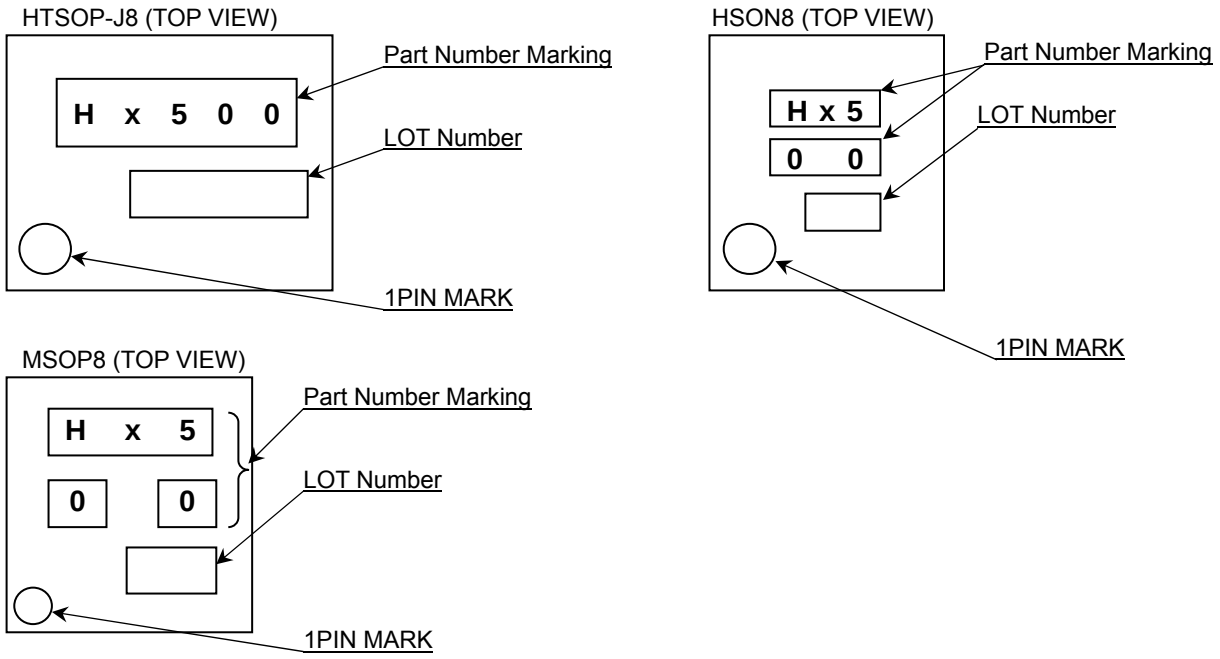

© 2015 ROHM Co., Ltd. All rights reserved.

Physical Dimension Tape and Reel Information

Package Name	HTSOP-J8

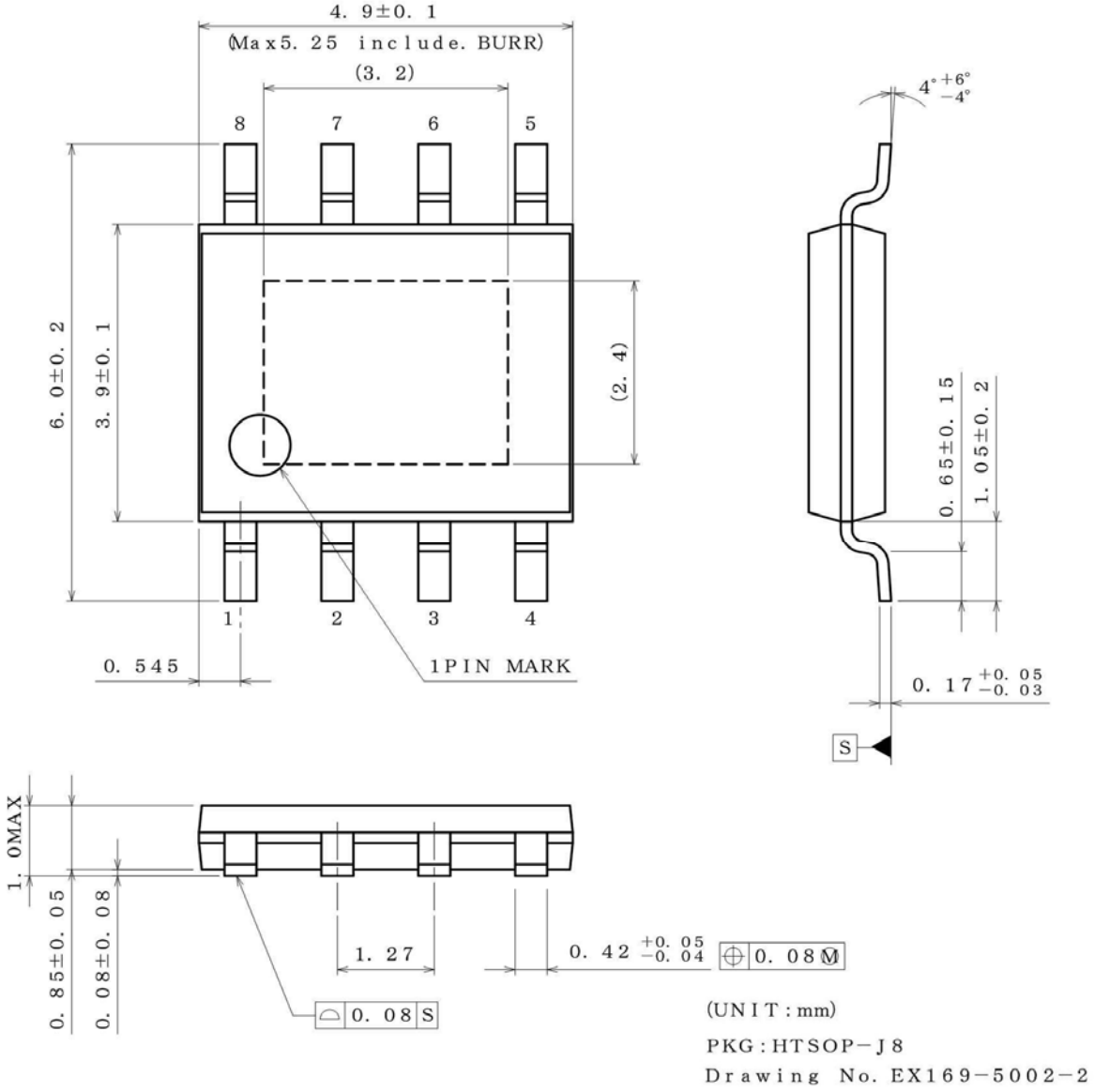

<Tape and Reel information>

Tape	Embossed carrier tape
Quantity	2500pcs
Direction of feed	E2 (The direction is the 1pin of product is at the upper left when you hold reel on the left hand and you pull out the tape on the right hand)

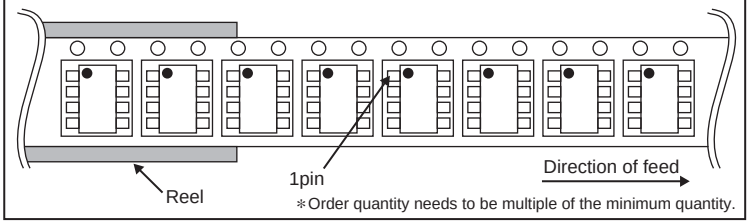

∗Order quantity needs to be multiple of the minimum quantity.

© 2015 ROHM Co., Ltd. All rights reserved.

Package Name	HSON8

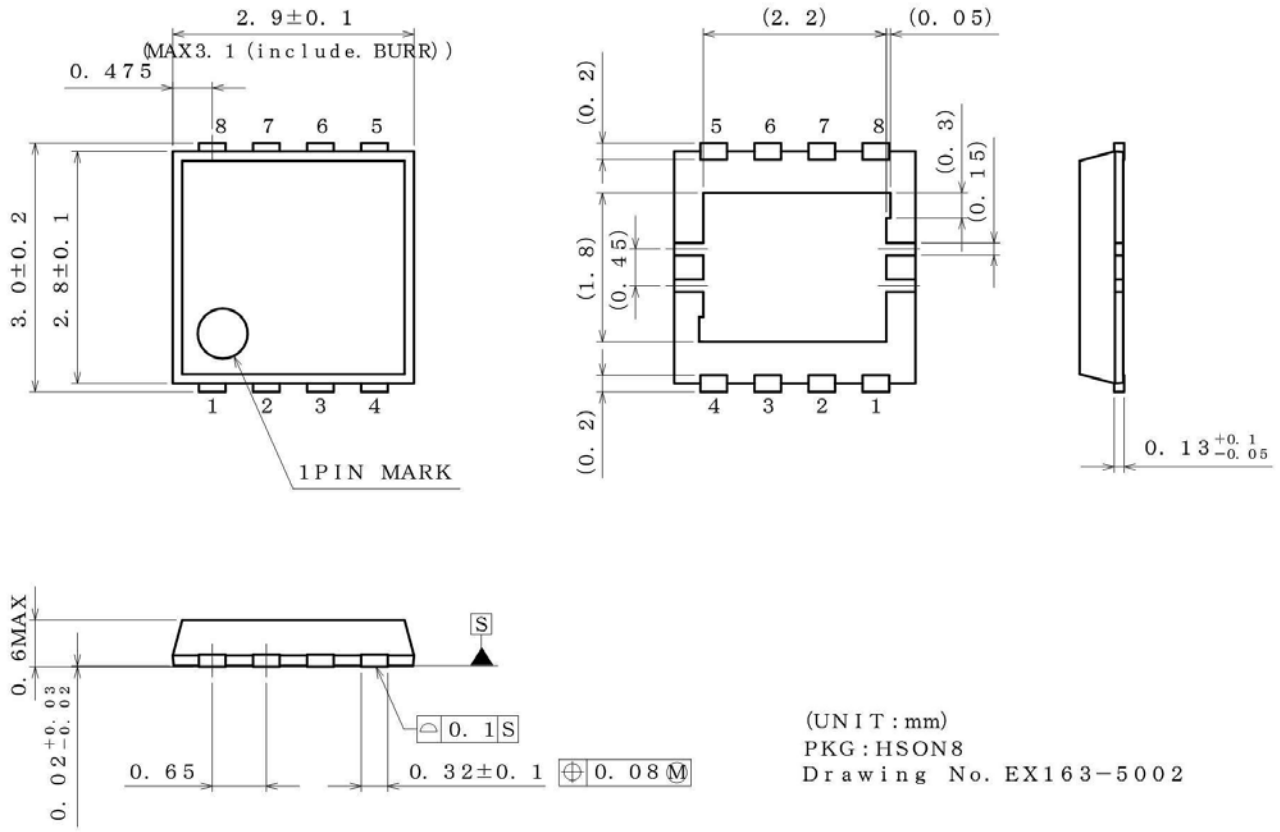

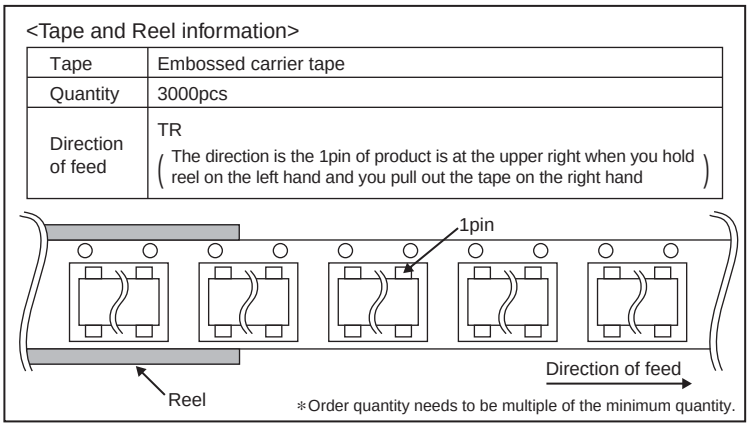

© 2015 ROHM Co., Ltd. All rights reserved.

Package Name	MSOP8

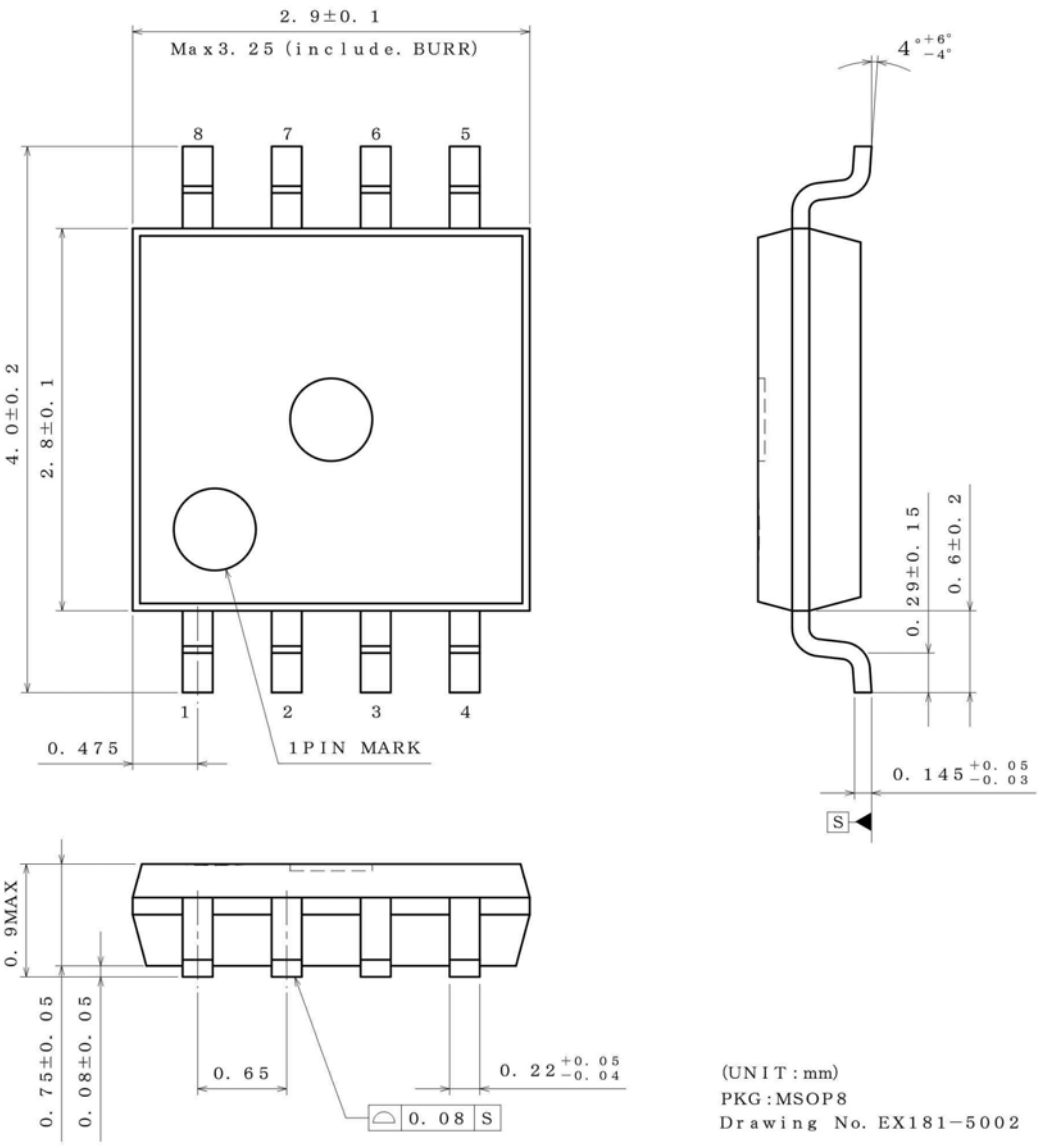

<Tape and Reel information>

Tape	Embossed carrier tape
Quantity	3000pcs
Direction of feed	TR (The direction is the 1pin of product is at the upper right when you hold reel on the left hand and you pull out the tape on the right hand)

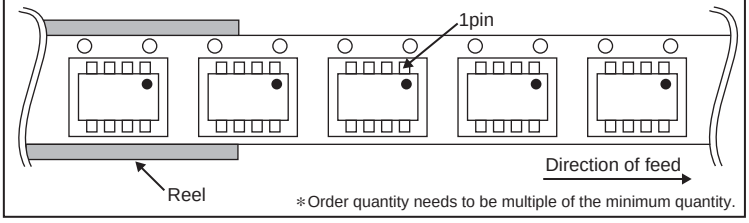

∗Order quantity needs to be multiple of the minimum quantity.

© 2015 ROHM Co., Ltd. All rights reserved.

Operational Notes

1) Absolute Maximum Ratings
Operating the IC over the absolute maximum ratings may damage the IC. In addition, it is impossible to predict all destructive situations such as short-circuit modes or open circuit modes. Therefore, it is important to consider circuit protection measures, like adding a fuse, in case the IC is expected to be operated in a special mode exceeding the absolute maximum ratings.
2) Reverse connection of power supply
Connecting the power supply in reverse polarity can damage the IC. Take precautions against reverse polarity when connecting the power supply, such as mounting an external diode between the power supply and the IC's power supply terminals.
3) Power supply line
Design the PCB layout pattern to provide low impedance ground and supply lines. Separate the ground and supply lines of the digital and analog blocks to prevent noise in the ground and supply lines of the digital block from affecting the analog block. Furthermore, connect a capacitor to ground at all power supply pins. Consider the effect of temperature and aging on the capacitance value when using electrolytic capacitors.
4) GND voltage
The voltage of the ground pin must be the lowest voltage of all pins of the IC at all operating conditions. Ensure that no pins are at a voltage below the ground pin at any time, even during transient condition.
5) Thermal consideration
Use a thermal design that allows for a sufficient margin by taking into account the permissible power dissipation (Pd) in actual operating conditions.
6) Short between pins and mounting errors
Be careful when mounting the IC on printed circuit boards. The IC may be damaged if it is mounted in a wrong orientation or if pins are shorted together. Short circuit may be caused by conductive particles caught between the pins.
7) TSD (Thermal Shut Down)
The IC incorporates a built-in thermal shutdown circuit, which is designed to turn off the IC when the internal temperature of the IC reaches a 175°C (with 25°C hysteresis). It is not designed to protect the IC from damage or guarantee its operation. Do not continue to operate the IC after this function is activated. Do not use the IC in conditions where this function will always be activated.
8) Overcurrent protection circuit (OCP)
The IC incorporates an over-current protection circuit that operates in accordance with the rated output capacity. This circuit protects the IC from damage when the load becomes shorted. It is also designed to limit the output current (without latching) in the event of more than 1.45A (Typ) current flow, such as from a large capacitor or other component connected to the output pin. This protection circuit is effective in preventing damage to the IC in cases of sudden and unexpected current surges. The IC should not be used in applications where the over current protection circuit will be activated continuously.
ST (8 PIN) will be set to 'L (abnormal condition)' if the current limit state continues to 20μs(Typ). Then, ST (8 PIN) will be set to 'H (normal condition)' if the current limit release until 1.1ms(Typ).
If current limit state continues, generation of heat, degradation, etc. of the IC can be considered. When the state of overcurrent still flows, compensate by setting the IC in standby mode applications using ST (8 PIN).
9) Testing on application boards
When testing the IC on an application board, connecting a capacitor directly to a low-impedance output pin may subject the IC to stress. Always discharge capacitors completely after each process or step. The IC's power supply should always be turned off completely before connecting or removing it from the test setup during the inspection process. To prevent damage from static discharge, ground the IC during assembly and use similar precautions during transport and storage.
10) Regarding input pins of the IC
This monolithic IC contains P+ isolation and P substrate layers between adjacent elements in order to keep them isolated. P-N junctions are formed at the intersection of the P layers with the N layers of other elements, creating a parasitic diode or transistor. For example (refer to figure below):
When GND > Pin A and GND > Pin B, the P-N junction operates as a parasitic diode.
When GND > Pin B, the P-N junction operates as a parasitic transistor.
Parasitic diodes inevitably occur in the structure of the IC. The operation of parasitic diodes can result in mutual interference among circuits, operational faults, or physical damage. Therefore, conditions that cause these diodes to operate, such as applying a voltage lower than the GND voltage to an input pin (and thus to the P substrate) should be avoided.

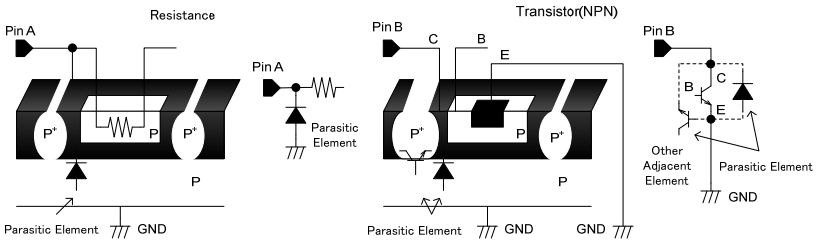

11) FIN (HTSOP-J8,HSON 8)
Since it has connected with sub of IC, please connect the heat dissipation metal to external GND potential.

Status of this document
The Japanese version of this document is the formal datasheet. A customer may use this translation version only as reference to help understand the formal version. If there are any differences, the formal version takes precedence.

© 2015 ROHM Co., Ltd. All rights reserved.

Revision History

Date	Revision	Changes
20.Sep.2013	001	New Release
15.Apr.2015	002	・P1. "AEC-Q100 qualified" is added in Features ・P1. "Product Summary" modify ・P1. Typical Application Circuit change from "V_{DD}" to "VBAT" ・P2. Pin Descriptions change from "FIN" to "Cooling Tab" and add Note(1) ・P3. Absolute Maximum Ratings delete "Ta" ・P3. Operating Voltage Ratings change Note(1) content ・P5. Electrical Characteristics modify circuit figure of "Note(1)" ・P7. Diagnostic Output Truth Table modify ・P11 . Change from "μsec" to "μs" at Protect function timing chart ・P12 . I/O equivalence circuits add "Cooling Tab"

© 2015 ROHM Co., Ltd. All rights reserved.

Notice

Precaution on using ROHM Products

1. If you intend to use our Products in devices requiring extremely high reliability (such as medical equipment (Note 1), aircraft/spacecraft, nuclear power controllers, etc.) and whose malfunction or failure may cause loss of human life, bodily injury or serious damage to property ("Specific Applications"), please consult with the ROHM sales representative in advance. Unless otherwise agreed in writing by ROHM in advance, ROHM shall not be in any way responsible or liable for any damages, expenses or losses incurred by you or third parties arising from the use of any ROHM's Products for Specific Applications.

(Note1) Medical Equipment Classification of the Specific Applications

JAPAN	USA	EU	CHINA
CLASSⅢ	CLASSⅢ	CLASSⅡb	CLASSⅢ
CLASSⅣ		CLASSⅢ	

2. ROHM designs and manufactures its Products subject to strict quality control system. However, semiconductor products can fail or malfunction at a certain rate. Please be sure to implement, at your own responsibilities, adequate safety measures including but not limited to fail-safe design against the physical injury, damage to any property, which a failure or malfunction of our Products may cause. The following are examples of safety measures:
   [a] Installation of protection circuits or other protective devices to improve system safety
   [b] Installation of redundant circuits to reduce the impact of single or multiple circuit failure

3. Our Products are not designed under any special or extraordinary environments or conditions, as exemplified below. Accordingly, ROHM shall not be in any way responsible or liable for any damages, expenses or losses arising from the use of any ROHM's Products under any special or extraordinary environments or conditions. If you intend to use our Products under any special or extraordinary environments or conditions (as exemplified below), your independent verification and confirmation of product performance, reliability, etc, prior to use, must be necessary:
   [a] Use of our Products in any types of liquid, including water, oils, chemicals, and organic solvents
   [b] Use of our Products outdoors or in places where the Products are exposed to direct sunlight or dust
   [c] Use of our Products in places where the Products are exposed to sea wind or corrosive gases, including Cl_2, H_2S, NH_3, SO_2, and NO_2
   [d] Use of our Products in places where the Products are exposed to static electricity or electromagnetic waves
   [e] Use of our Products in proximity to heat-producing components, plastic cords, or other flammable items
   [f] Sealing or coating our Products with resin or other coating materials
   [g] Use of our Products without cleaning residue of flux (even if you use no-clean type fluxes, cleaning residue of flux is recommended); or Washing our Products by using water or water-soluble cleaning agents for cleaning residue after soldering
   [h] Use of the Products in places subject to dew condensation

4. The Products are not subject to radiation-proof design.

5. Please verify and confirm characteristics of the final or mounted products in using the Products.

6. In particular, if a transient load (a large amount of load applied in a short period of time, such as pulse. is applied, confirmation of performance characteristics after on-board mounting is strongly recommended. Avoid applying power exceeding normal rated power; exceeding the power rating under steady-state loading condition may negatively affect product performance and reliability.

7. De-rate Power Dissipation (Pd) depending on Ambient temperature (Ta). When used in sealed area, confirm the actual ambient temperature.

8. Confirm that operation temperature is within the specified range described in the product specification.

9. ROHM shall not be in any way responsible or liable for failure induced under deviant condition from what is defined in this document.

Precaution for Mounting / Circuit board design

1. When a highly active halogenous (chlorine, bromine, etc.) flux is used, the residue of flux may negatively affect product performance and reliability.

2. In principle, the reflow soldering method must be used on a surface-mount products, the flow soldering method must be used on a through hole mount products. If the flow soldering method is preferred on a surface-mount products, please consult with the ROHM representative in advance.

For details, please refer to ROHM Mounting specification

© 2015 ROHM Co., Ltd. All rights reserved.

Precautions Regarding Application Examples and External Circuits

1. If change is made to the constant of an external circuit, please allow a sufficient margin considering variations of the characteristics of the Products and external components, including transient characteristics, as well as static characteristics.

2. You agree that application notes, reference designs, and associated data and information contained in this document are presented only as guidance for Products use. Therefore, in case you use such information, you are solely responsible for it and you must exercise your own independent verification and judgment in the use of such information contained in this document. ROHM shall not be in any way responsible or liable for any damages, expenses or losses incurred by you or third parties arising from the use of such information.

Precaution for Electrostatic

This Product is electrostatic sensitive product, which may be damaged due to electrostatic discharge. Please take proper caution in your manufacturing process and storage so that voltage exceeding the Products maximum rating will not be applied to Products. Please take special care under dry condition (e.g. Grounding of human body / equipment / solder iron, isolation from charged objects, setting of Ionizer, friction prevention and temperature / humidity control).

Precaution for Storage / Transportation

1. Product performance and soldered connections may deteriorate if the Products are stored in the places where:
   [a] the Products are exposed to sea winds or corrosive gases, including Cl2, H2S, NH3, SO2, and NO2
   [b] the temperature or humidity exceeds those recommended by ROHM
   [c] the Products are exposed to direct sunshine or condensation
   [d] the Products are exposed to high Electrostatic

2. Even under ROHM recommended storage condition, solderability of products out of recommended storage time period may be degraded. It is strongly recommended to confirm solderability before using Products of which storage time is exceeding the recommended storage time period.

3. Store / transport cartons in the correct direction, which is indicated on a carton with a symbol. Otherwise bent leads may occur due to excessive stress applied when dropping of a carton.

4. Use Products within the specified time after opening a humidity barrier bag. Baking is required before using Products of which storage time is exceeding the recommended storage time period.

Precaution for Product Label

QR code printed on ROHM Products label is for ROHM's internal use only.

Precaution for Disposition

When disposing Products please dispose them properly using an authorized industry waste company.

Precaution for Foreign Exchange and Foreign Trade act

Since concerned goods might be fallen under listed items of export control prescribed by Foreign exchange and Foreign trade act, please consult with ROHM in case of export.

Precaution Regarding Intellectual Property Rights

1. All information and data including but not limited to application example contained in this document is for reference only. ROHM does not warrant that foregoing information or data will not infringe any intellectual property rights or any other rights of any third party regarding such information or data.

2. ROHM shall not have any obligations where the claims, actions or demands arising from the combination of the Products with other articles such as components, circuits, systems or external equipment (including software).

3. No license, expressly or implied, is granted hereby under any intellectual property rights or other rights of ROHM or any third parties with respect to the Products or the information contained in this document. Provided, however, that ROHM will not assert its intellectual property rights or other rights against you or your customers to the extent necessary to manufacture or sell products containing the Products, subject to the terms and conditions herein.

Other Precaution

1. This document may not be reprinted or reproduced, in whole or in part, without prior written consent of ROHM.

2. The Products may not be disassembled, converted, modified, reproduced or otherwise changed without prior written consent of ROHM.

3. In no event shall you use in any way whatsoever the Products and the related technical information contained in the Products or this document for any military purposes, including but not limited to, the development of mass-destruction weapons.

4. The proper names of companies or products described in this document are trademarks or registered trademarks of ROHM, its affiliated companies or third parties.

© 2015 ROHM Co., Ltd. All rights reserved.

General Precaution

1. Before you use our Products, you are requested to carefully read this document and fully understand its contents. ROHM shall not be in any way responsible or liable for failure, malfunction or accident arising from the use of any ROHM's Products against warning, caution or note contained in this document.

2. All information contained in this document is current as of the issuing date and subject to change without any prior notice. Before purchasing or using ROHM's Products, please confirm the latest information with a ROHM sales representative.

3. The information contained in this document is provided on an "as is" basis and ROHM does not warrant that all information contained in this document is accurate and/or error-free. ROHM shall not be in any way responsible or liable for any damages, expenses or losses incurred by you or third parties resulting from inaccuracy or errors of or concerning such information.

© 2015 ROHM Co., Ltd. All rights reserved.