RFID Tag (Passive)

ART923X855406TX02

RoHS/RoHS II compliant

85.0 x 54.0 x 0.635mm

MSL level: Not Applicable

FEATURES:

- RoHS Compliant
- SMD Type
- High Gain

TYPICAL APPLICATIONS:

RFID systems for Logistic & Inventory Management of Retail, Pharmaceutical, Automotive Industries; Industrial automation, Contactless smart cards.

STANDARD SPECIFICATIONS:

Parameters	Min.	Typ.	Max.	Units	Note
Range of Receiving Frequency		902-928		MHz	
Frequency of Lowest Return Loss		915±1.5		MHz	(On TEST Plane)
Tag center frequency		915±5		MHz	(On Metal surface)
GAIN	3.0			dBi	(On70x70 GND Plane)
Polarization Model		Linear			(Right Hand Circular Polarization)
Impedance		ISO18000-6C/EPC		Ω	
Working Temperature		-40~ +85		˚C	
Storage Temperature		-40～+110		˚C	
Frequency Temperature Coefficient		0± 10		ppm/⊠	
Antenna Reading Range	6.0			m	

OUTLINE DIMENSION

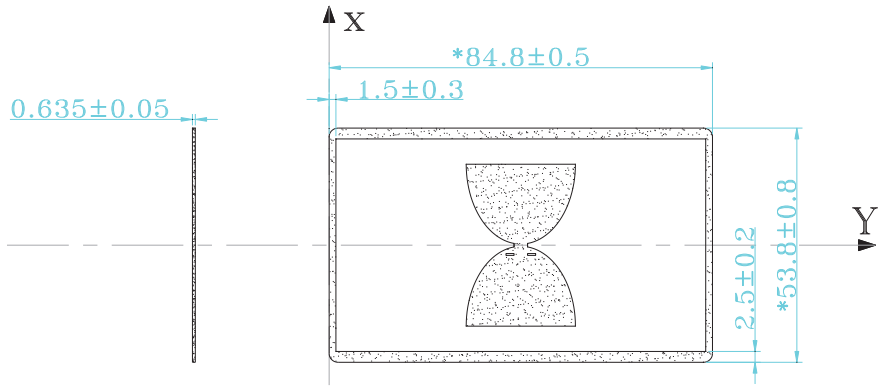

Other Tolerance: ±0.1mm

Unit: mm

RFID Tag (Passive)

ART923X855406TX02

RoHS/RoHS II compliant

85.0 x 54.0 x 0.635mm

PACKAGING

Each foam box contains 50pcs of Tag Antenna. There are 12 foam boxes per carton (outer box) with size 345*210*275mm

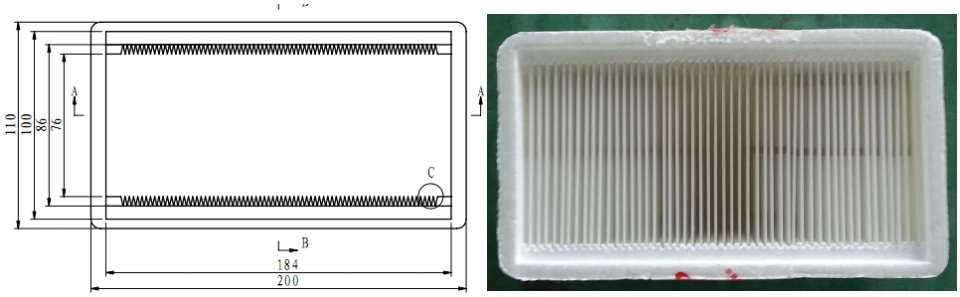

Tray

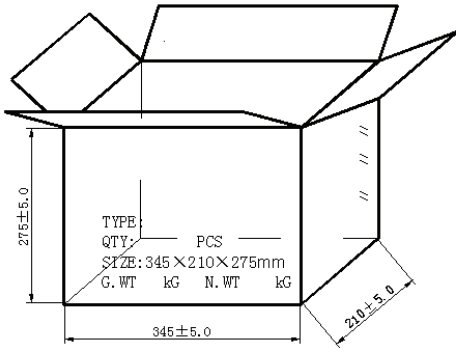

Outer Box

CAUTION:

(1) Do not apply excess mechanical stress to the component body or terminations. Do not attempt to re-form or bend the components as this will cause damage to the component.
(2) Do not expose the component to open flame.
(3) This specification applies to the functionality of the component as a single unit. Please insure the component is thoroughly evaluated in the application circuit.

NOTE:

1) The parts are manufactured in accordance with this specification. If other conditions and specifications which are required for this specification, please contact ABRACON for more information.
2) ABRACON will supply the parts in accordance with this specification unless we receive a written request to modify prior to an order placement.
3) In no case shall ABRACON be liable for any product failure from in appropriate handling or operation of the item beyond the scope of this specification.
4) When changing your production process, please notify ABRACON immediately.
5) ABRACON Corporation's products are COTS – Commercial-Off-The-Shelf products; suitable for Commercial, Industrial and, where designated, Automotive Applications. ABRACON's products are not specifically designed for Military, Aviation, Aerospace, Life-dependant Medical applications or any application requiring high reliability where component failure could result in loss of life and/or property. For applications requiring high reliability and/or presenting an extreme operating environment, written consent and authorization from ABRACON Corporation is required. Please contact ABRACON Corporation for more information.
6) All specifications and Marking will be subject to change without notice.

ATTENTION: Abracon Corporation's products are COTS – Commercial-Off-The-Shelf products; suitable for Commercial, Industrial and, where designated, Automotive Applications. Abracon's products are not specifically designed for Military, Aviation, Aerospace, Life-dependant Medical applications or any application requiring high reliability where component failure could result in loss of life and/or property. For applications requiring high reliability and/or presenting an extreme operating environment, written consent and authorization from Abracon Corporation is required. Please contact Abracon Corporation for more information.

Mouser Electronics

Authorized Distributor

Click to View Pricing, Inventory, Delivery & Lifecycle Information:

ABRACON:
ART923X855406TX02