750 MHz, 3.8 mA 10 ns Switching Multiplexers

AD8180/AD8182

FEATURES
Fully Buffered Inputs and Outputs
Fast Channel Switching: 10 ns
High Speed
- **> 750 MHz Bandwidth (–3 dB)**
- **750 V/µs Slew Rate**
- **Fast Settling Time of 14 ns to 0.1%**

Low Power: 3.8 mA (AD8180), 6.8 mA (AD8182)
Excellent Video Specifications ($R_L \geq 1$ kΩ)
- **Gain Flatness of 0.1 dB Beyond 100 MHz**
- **0.02% Differential Gain Error**
- **0.02° Differential Phase Error**

Low Glitch: < 35 mV
Low All-Hostile Crosstalk of –80 dB @ 5 MHz
High "OFF" Isolation of –90 dB @ 5 MHz
Low Cost
Fast Output Disable Feature for Connecting Multiple Devices

APPLICATIONS
Pixel Switching for "Picture-In-Picture"
Switching in LCD and Plasma Displays
Video Switchers and Routers

FUNCTIONAL BLOCK DIAGRAM

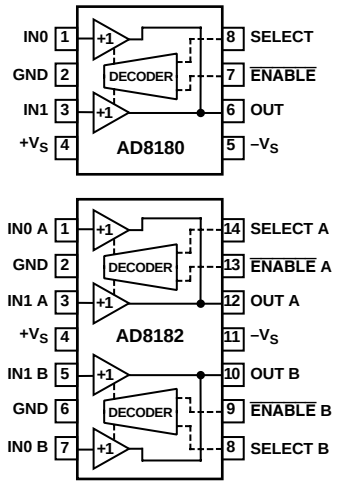

Table I. Truth Table

SELECT	$\overline{\text{ENABLE}}$	OUTPUT
0	0	IN0
1	0	IN1
0	1	High Z
1	1	High Z

PRODUCT DESCRIPTION

The AD8180 (single) and AD8182 (dual) are high speed 2-to-1 multiplexers. They offer –3 dB signal bandwidth greater than 750 MHz along with slew rate of 750 V/µs. With better than 80 dB of crosstalk and isolation, they are useful in many high speed applications. The differential gain and differential phase error of 0.02% and 0.02°, along with 0.1 dB flatness beyond 100 MHz make the AD8180 and AD8182 ideal for professional video multiplexing. They offer 10 ns switching time making them an excellent choice for pixel switching (picture-in-picture) while consuming less than 3.8 mA (per 2:1 mux) on ±5 V supply voltages.

Both devices offer a high speed disable feature allowing the output to be configured into a high impedance state. This allows multiple outputs to be connected together for cascading stages while the "OFF" channels do not load the output bus. They operate on voltage supplies of ±5 V and are offered in 8- and 14-lead plastic DIP and SOIC packages.

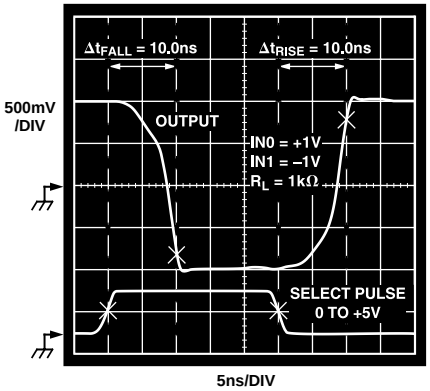

Figure 1. AD8180/AD8182 Switching Characteristics

REV. B

Information furnished by Analog Devices is believed to be accurate and reliable. However, no responsibility is assumed by Analog Devices for its use, nor for any infringements of patents or other rights of third parties which may result from its use. No license is granted by implication or otherwise under any patent or patent rights of Analog Devices.

One Technology Way, P.O. Box 9106, Norwood, MA 02062-9106, U.S.A.
Tel: 781/329-4700 World Wide Web Site: http://www.analog.com
Fax: 781/326-8703
© Analog Devices, Inc., 2000

AD8180/AD8182–SPECIFICATIONS (@ T_A = +25°C, V_S = ±5 V, R_L = 2 kΩ unless otherwise noted)

Parameter		Conditions	AD8180A/AD8182A Min	Typ	Max	Units
SWITCHING CHARACTERISTICS						
Channel Switching Time[1]		Channel-to-Channel				
50% Logic to 10% Output Settling		IN0 = +1 V, IN1 = –1 V; R_L = 1 kΩ		5		ns
50% Logic to 90% Output Settling		IN0 = +1 V, IN1 = –1 V; R_L = 1 kΩ		10		ns
50% Logic to 99.9% Output Settling		IN0 = +1 V, IN1 = –1 V; R_L = 1 kΩ		14		ns
$\overline{\text{ENABLE}}$ to Channel ON Time[2]		SEL = 0 or 1				
50% Logic to 90% Output Settling		IN0 = +1 V, –1 V or IN1 = –1 V, +1 V; R_L = 1 kΩ		10.5		ns
$\overline{\text{ENABLE}}$ to Channel OFF Time[2]		SEL = 0 or 1				
50% Logic to 90% Output Settling		IN0 = +1 V, –1 V or IN1 = –1 V, +1 V; R_L = 1 kΩ		11		ns
Channel Switching Transient (Glitch)[3]		All Inputs Are Grounded, R_L = 1 kΩ		±25 /±35		mV
DIGITAL INPUTS						
Logic "1" Voltage		SEL and $\overline{\text{ENABLE}}$ Inputs	2.0			V
Logic "0" Voltage		SEL and $\overline{\text{ENABLE}}$ Inputs			0.8	V
Logic "1" Input Current		SEL, $\overline{\text{ENABLE}}$ = +4 V		10	200	nA
Logic "0" Input Current		SEL, $\overline{\text{ENABLE}}$ = +0.4 V		2	3	µA
DYNAMIC PERFORMANCE						
–3 dB Bandwidth (Small Signal)[4]	AD8180R	V_{IN} = 50 mV rms, R_L = 5 kΩ	750	930		MHz
	AD8182R	V_{IN} = 50 mV rms, R_L = 5 kΩ	640	780		MHz
–3 dB Bandwidth (Large Signal)	AD8180R	V_{IN} = 1 V rms, R_L = 5 kΩ	120	150		MHz
	AD8182R	V_{IN} = 1 V rms, R_L = 5 kΩ	110	135		MHz
0.1 dB Bandwidth[4, 5]		V_{IN} = 50 mV rms, R_L = 5 kΩ, R_S = 0 Ω		100		MHz
	AD8180R	V_{IN} = 50 mV rms, R_L = 1 kΩ–5 kΩ, R_S = 150 Ω		210		MHz
	AD8182R	V_{IN} = 50 mV rms, R_L = 1 kΩ–5 kΩ, R_S = 125 Ω		210		MHz
Slew Rate		2 V Step		750		V/µs
Settling Time to 0.1%		2 V Step		14		ns
DISTORTION/NOISE PERFORMANCE						
Differential Gain		f = 3.58 MHz, R_L = 1 kΩ		0.02	0.04	%
Differential Phase		f = 3.58 MHz, R_L = 1 kΩ		0.02	0.04	Degrees
All Hostile Crosstalk[6]	AD8180R	f = 5 MHz, R_L = 1 kΩ		–80		dB
		f = 30 MHz, R_L = 1 kΩ		–65		dB
	AD8182R	f = 5 MHz, R_L = 1 kΩ		–78		dB
		f = 30 MHz, R_L = 1 kΩ		–63		dB
OFF Isolation[7]	AD8180R	f = 5 MHz, R_L = 30 Ω		–89		dB
	AD8182R	f = 5 MHz, R_L = 30 Ω		–93		dB
Voltage Noise		f = 10 kHz–30 MHz		4.5		nV/√Hz
Total Harmonic Distortion		f_C = 10 MHz, V_O = 2 V p-p, R_L = 1 kΩ		–78		dBc
DC/TRANSFER CHARACTERISTICS						
Voltage Gain[8]		V_{IN} = ±1 V, R_L = 2 kΩ		0.982		V/V
		V_{IN} = ±1 V, R_L = 10 kΩ	0.986	0.993		V/V
Input Offset Voltage				1	12	mV
		T_{MIN} to T_{MAX}			15	mV
Input Offset Voltage Matching		Channel-to-Channel		0.5	4	mV
Input Offset Drift				11		µV/°C
Input Bias Current				1	5	µA
		T_{MIN} to T_{MAX}			7	µA
Input Bias Current Drift				12		nA/°C
INPUT CHARACTERISTICS						
Input Resistance			1	2.2		MΩ
Input Capacitance		Channel Enabled (R Package)		1.5		pF
		Channel Disabled (R Package)		1.5		pF
Input Voltage Range				±3.3		V
OUTPUT CHARACTERISTICS						
Output Voltage Swing		R_L = 500 Ω[9]	±3.0	±3.1		V
Short Circuit Current				30		mA
Output Resistance		Enabled		27		Ω
		Disabled	1	10		MΩ
Output Capacitance		Disabled (R Package)		1.7		pF
POWER SUPPLY						
Operating Range			±4		±6	V
Power Supply Rejection Ratio	+PSRR	$+V_S$ = +4.5 V to +5.5 V, $–V_S$ = –5 V	54	57		dB
	–PSRR	$–V_S$ = –4.5 V to –5.5 V, $+V_S$ = +5 V	45	51		dB
Quiescent Current		All Channels "ON"		3.8/6.8	4.5/8	mA
		T_{MIN} to T_{MAX}			4.75/8.5	mA
		All Channels "OFF"		1.3/2	2/3	mA
		T_{MIN} to T_{MAX}			2/3	mA
		AD8182, One Channel "ON"		4		mA
OPERATING TEMPERATURE RANGE			–40		+85	°C

NOTES

[1]$\overline{\text{ENABLE}}$ pin is grounded. IN0 = +1 V dc, IN1 = –1 V dc. SELECT input is driven with 0 V to +5 V pulse. Measure transition time from 50% of the SELECT input value (+2.5 V) and 10% (or 90%) of the total output voltage transition from IN0 channel voltage (+1 V) to IN1 (–1 V), or vice versa.

[2]$\overline{\text{ENABLE}}$ pin is driven with 0 V to +5 V pulse (with 3 ns edges). State of $\overline{\text{SELECT}}$ input determines which channel is activated (i.e., if SELECT = Logic 0, IN0 is selected). Set IN0 = +1 V dc, IN1 = –1 V dc, and measure transition time from 50% of $\overline{\text{ENABLE}}$ pulse (+2.5 V) to 90% of the total output voltage change. In Figure 5, Δt_{OFF} is the disable time, Δt_{ON} is the enable time.

[3]All inputs are grounded. SELECT input is driven with 0 V to +5 V pulse. The outputs are monitored. Speeding the edges of the SELECT pulse increases the glitch magnitude due to coupling via the ground plane. Removing the SELECT input termination will lower glitch, as does increasing R_L.

[4]Decreasing R_L lowers the bandwidth slightly. Increasing C_L lowers the bandwidth considerably (see Figure 19).

[5]A resistor (R_S) placed in series with the mux inputs serves to optimize 0.1 dB flatness, but is not required. Increasing output capacitance will increase peaking and reduce bandwidth (see Figure 20.)

[6]Select input which is not being driven (i.e., if SELECT is Logic 1, input activated is IN1); drive all other inputs with V_{IN} = 0.707 V rms and monitor output at f = 5 and 30 MHz. R_L = 1 kΩ (see Figure 13).

[7]Mux is disabled (i.e., $\overline{\text{ENABLE}}$ = Logic 1) and all inputs are driven simultaneously with V_{IN} = 0.446 V rms. Output is monitored at f = 5 and 30 MHz. R_L = 30 Ω to simulate R_{ON} of one enabled mux within a system (see Figure 14). In this mode the output impedance is very high (typ 10 MΩ), and the signal couples across the package; the load impedance determines the crosstalk.

[8]Voltage gain decreases for lower values of R_L. The resistive divider formed by the mux enabled output resistance (27 Ω) and R_L causes a gain which decreases as R_L decreases (i.e., the voltage gain is approximately 0.97 V/V (3% gain error) for R_L = 1 kΩ).

[9]Larger values of R_L provide wider output voltage swings, as well as better gain accuracy. See Note 8.

Specifications subject to change without notice.

ABSOLUTE MAXIMUM RATINGS[1]

Supply Voltage . . . . . 12.6 V
Internal Power Dissipation[2]
AD8180 8-Lead Plastic DIP (N) . . . . . 1.3 Watts
AD8180 8-Lead Small Outline (R) . . . . . 0.9 Watts
AD8182 14-Lead Plastic DIP (N) . . . . . 1.6 Watts
AD8182 14-Lead Small Outline (R) . . . . . 1.0 Watts
Input Voltage . . . . . $\pm V_S$
Output Short Circuit Duration . . . . . Observe Power Derating Curves
Storage Temperature Range
N and R Package . . . . . –65°C to +125°C
Lead Temperature Range (Soldering 10 sec) . . . . . +300°C

NOTES

[1]Stresses above those listed under Absolute Maximum Ratings may cause permanent damage to the device. This is a stress rating only; functional operation of the device at these or any other conditions above those indicated in the operational section of this specification is not implied. Exposure to absolute maximum rating conditions for extended periods may affect device reliability.

[2]Specification is for device in free air: 8-Lead Plastic DIP Package: θ_{JA} = 90°C/W; 8-Lead SOIC Package: θ_{JA} = 155°C/W; 14-Lead Plastic Package: θ_{JA} = 75°C/W; 14-Lead SOIC Package: θ_{JA} = 120°C/W, where $P_D = (T_J - T_A)/\theta_{JA}$.

ORDERING GUIDE

Model	Temperature Range	Package Description	Package Option
AD8180AN	–40°C to +85°C	8-Lead Plastic DIP	N-8
AD8180AR	–40°C to +85°C	8-Lead SOIC	SO-8
AD8180AR-REEL	–40°C to +85°C	13" Reel SOIC	SO-8
AD8180AR-REEL7	–40°C to +85°C	7" Reel SOIC	SO-8
AD8182AN	–40°C to +85°C	14-Lead Plastic DIP	N-14
AD8182AR	–40°C to +85°C	14-Lead Narrow SOIC	R-14
AD8182AR-REEL	–40°C to +85°C	13" Reel SOIC	R-14
AD8182AR-REEL7	–40°C to +85°C	7" Reel SOIC	R-14
AD8180-EB		Evaluation Board	
AD8182-EB		Evaluation Board	

MAXIMUM POWER DISSIPATION

The maximum power that can be safely dissipated by the AD8180 and AD8182 is limited by the associated rise in junction temperature. The maximum safe junction temperature for plastic encapsulated devices is determined by the glass transition temperature of the plastic, approximately +150°C. Exceeding this limit temporarily may cause a shift in parametric performance due to a change in the stresses exerted on the die by the package. Exceeding a junction temperature of +175°C for an extended period can result in device failure.

While the AD8180 and AD8182 are internally short circuit protected, this may not be sufficient to guarantee that the maximum junction temperature (+150°C) is not exceeded under all conditions. To ensure proper operation, it is necessary to observe the maximum power derating curves shown in Figures 2 and 3.

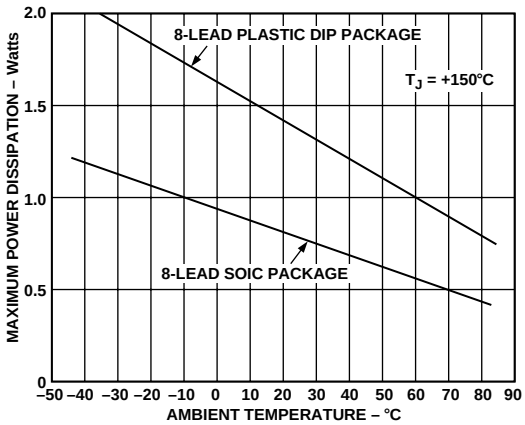

Figure 2. AD8180 Maximum Power Dissipation vs. Temperature

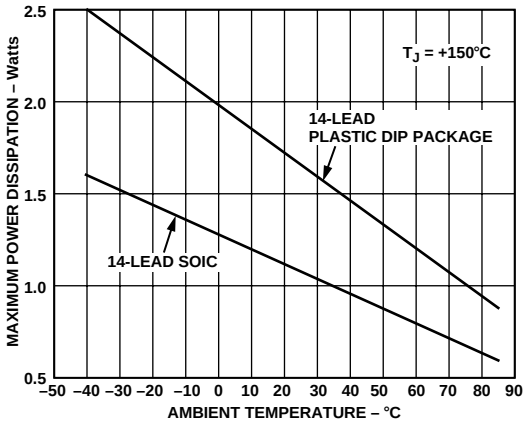

Figure 3. AD8182 Maximum Power Dissipation vs. Temperature

CAUTION

ESD (electrostatic discharge) sensitive device. Electrostatic charges as high as 4000 V readily accumulate on the human body and test equipment and can discharge without detection. Although the AD8180/AD8182 feature proprietary ESD protection circuitry, permanent damage may occur on devices subjected to high energy electrostatic discharges. Therefore, proper ESD precautions are recommended to avoid performance degradation or loss of functionality.

AD8180/AD8182–Typical Performance Curves

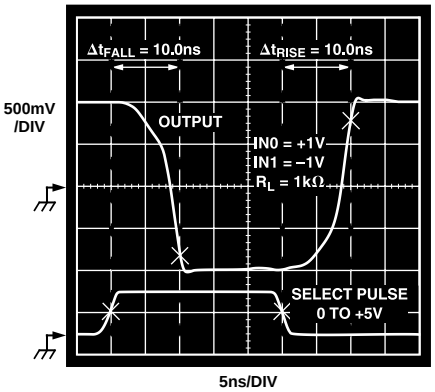

Figure 4. Channel Switching Characteristics

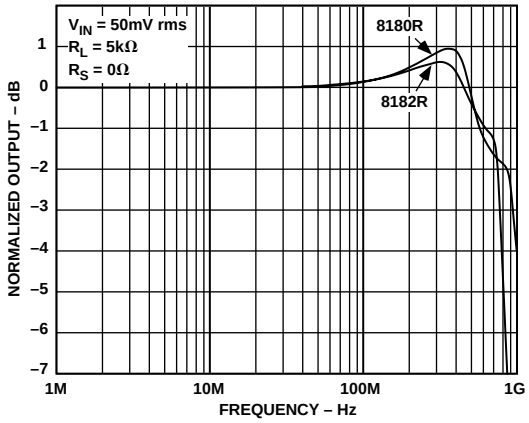

Figure 7. Small Signal Frequency Response

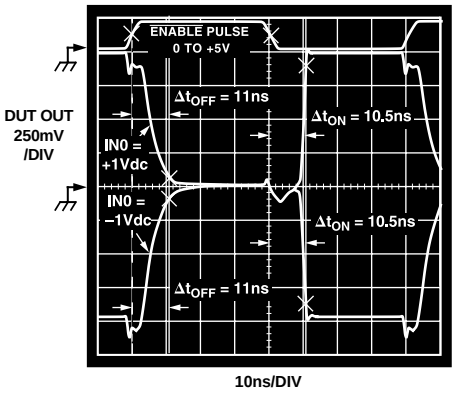

Figure 5. Enable and Disable Switching Characteristics

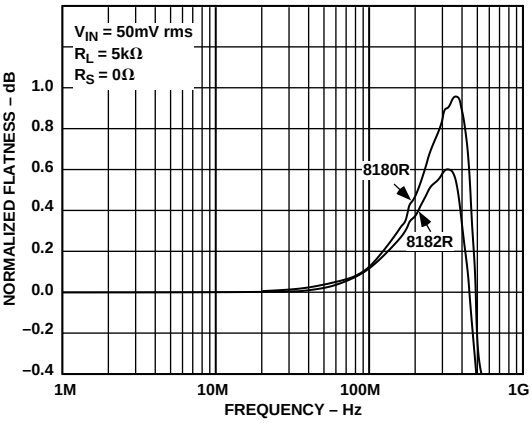

Figure 8. Gain Flatness vs. Frequency

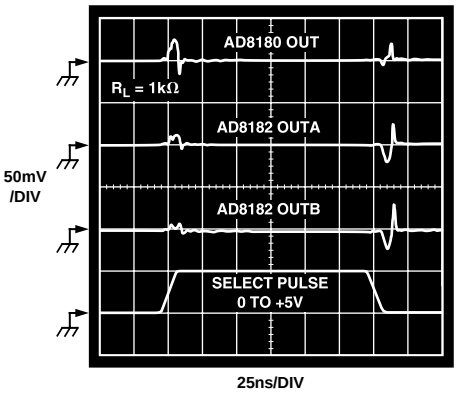

Figure 6. Channel Switching Transient (Glitch)

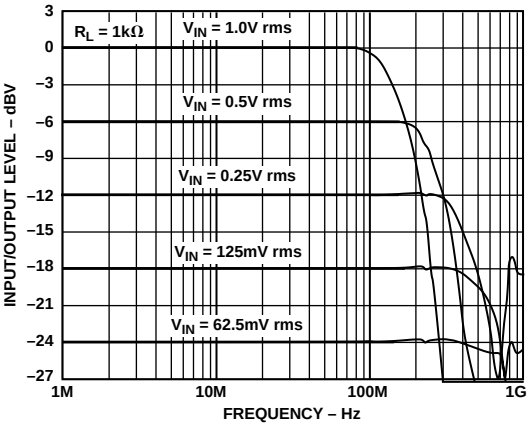

Figure 9. Large Signal Frequency Response

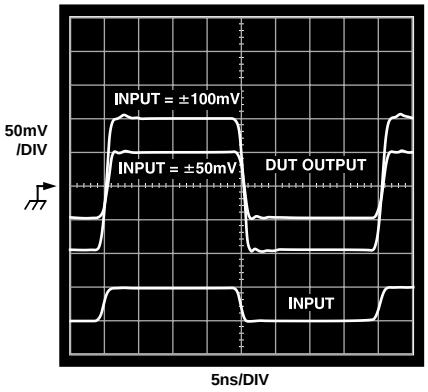

Figure 10. Small Signal Transient Response

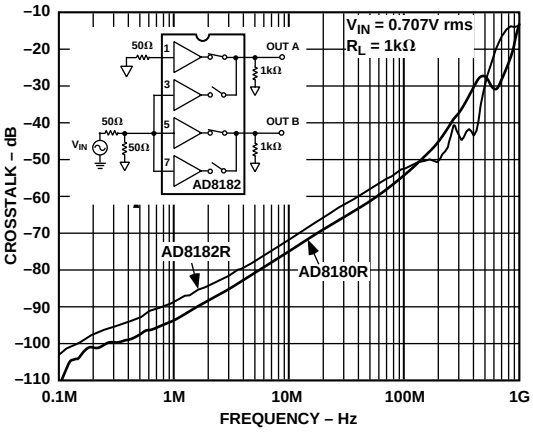

Figure 13. All-Hostile Crosstalk vs. Frequency

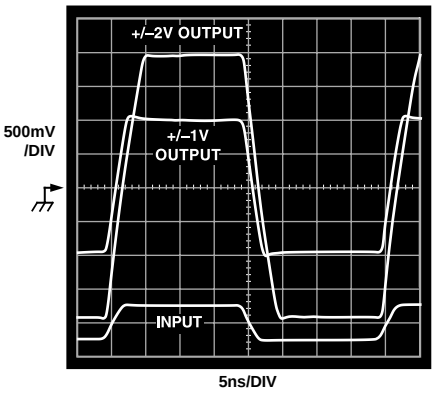

Figure 11. Large Signal Transient Response

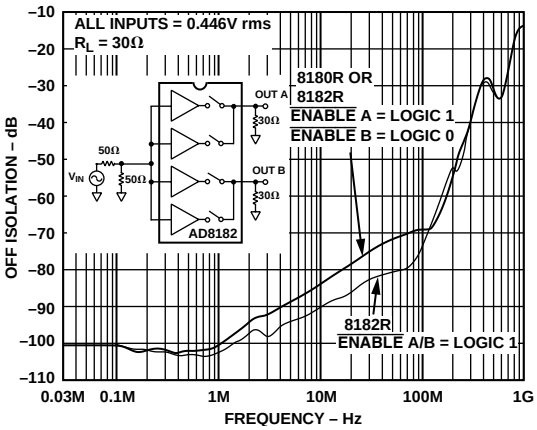

Figure 14. "OFF" Isolation vs. Frequency

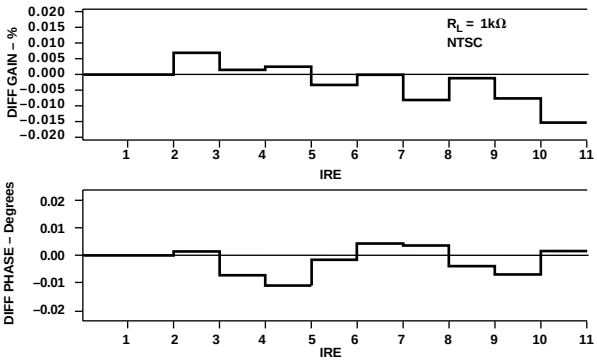

Figure 12. Differential Gain and Phase Error

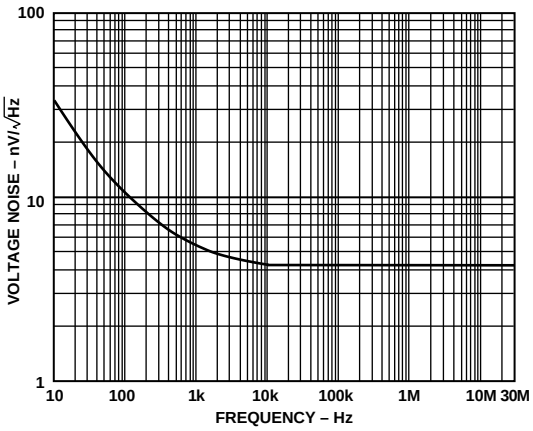

Figure 15. Voltage Noise vs. Frequency

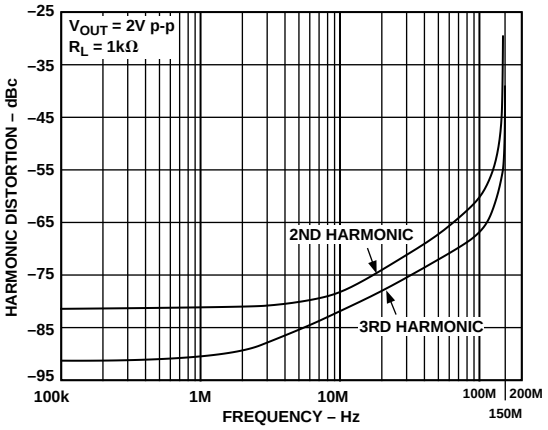

Figure 16. Harmonic Distortion vs. Frequency

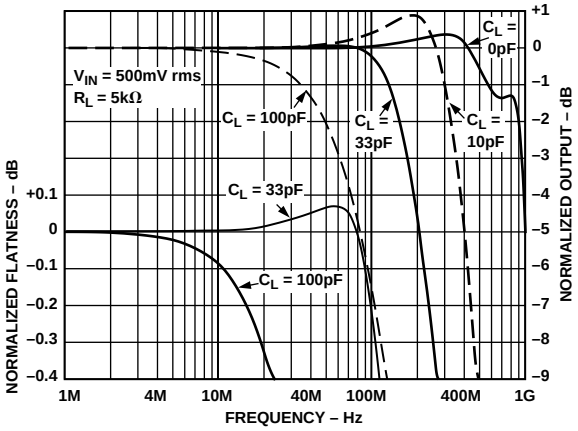

Figure 19. Frequency Response vs. Capacitive Load

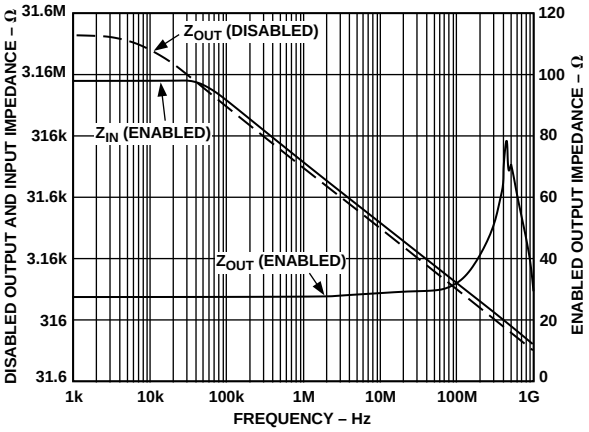

Figure 17. Disabled Output and Input Impedance vs. Frequency

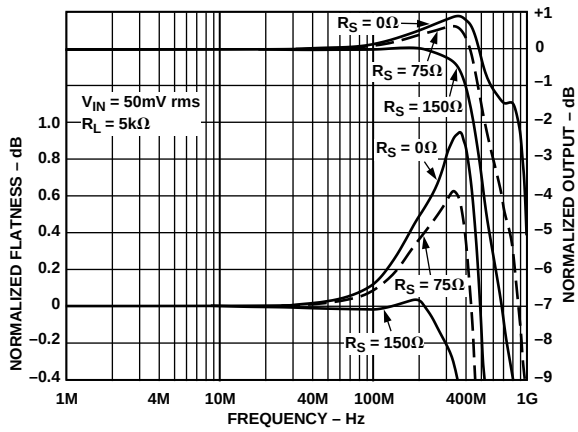

Figure 20. Frequency Response vs. Input Series Resistance

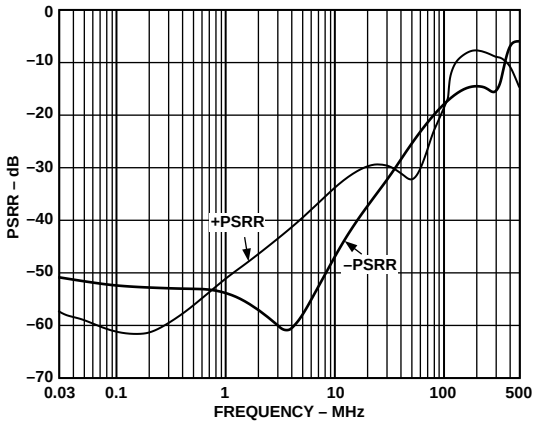

Figure 18. Power Supply Rejection vs. Frequency

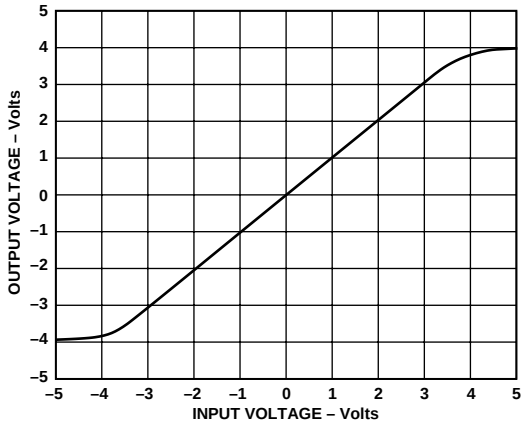

Figure 21. Output Voltage vs. Input Voltage, R_L = 1 kΩ

THEORY OF OPERATION

The AD8180 and AD8182 video multiplexers are designed for fast-switching (10 ns) and wide bandwidth (> 750 MHz). This performance is attained with low power dissipation (3.8 mA per active channel) through the use of proprietary circuit techniques and a dielectrically-isolated complementary bipolar process. These devices have a fast disable function that allows the outputs of several muxes to be wired in parallel to form a larger mux with little degradation in switching time. The low disabled output capacitance (1.7 pF) of these muxes helps to preserve the system bandwidth in larger matrices. Unlike earlier CMOS switches, the switched open-loop buffer architecture of the AD8180 and AD8182 provides a unidirectional signal path with minimal switching glitches and constant, low input capacitance. Since the input impedance of these muxes is nearly independent of the load impedance and the state of the mux, the frequency response of the ON channels in a large switch matrix is not affected by fanout.

Figure 22 shows a block diagram and simplified schematic of the AD8180, which contains two switched buffers (S0 and S1) that share a common output. The decoder logic translates TTL-compatible logic inputs (SELECT and $\overline{\text{ENABLE}}$) to internal, differential ECL levels for fast, low-glitch switching. The SELECT input determines which of the two buffers is enabled, unless the $\overline{\text{ENABLE}}$ input is HIGH, in which case both buffers are disabled and the output is switched to a high impedance state.

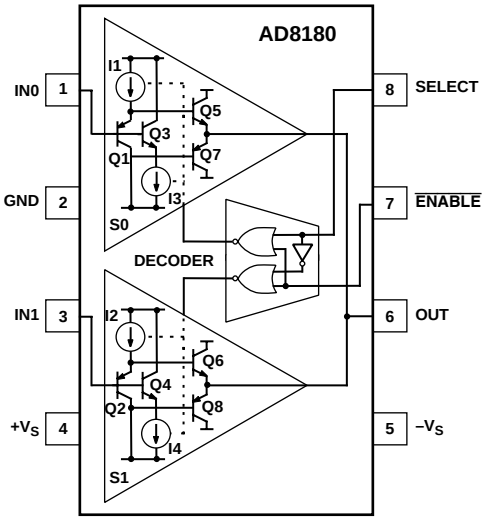

Figure 22. Block Diagram and Simplified Schematic of the AD8180 Multiplexer

Each open-loop buffer is implemented as a complementary emitter follower that provides high input impedance, symmetric slew rate and load drive, and high output-to-input isolation due to its β^2 current gain. The selected buffer is biased ON by fast switched current sources that allow the buffer to turn on quickly. Dedicated flatness circuits, combined with the open-loop architecture of the AD8180 and AD8182, keep peaking low (typically < 1 dB) when driving high capacitive loads, without the need for external series resistors at the input or output. If better flatness response is desired, an input series resistance (R_S) may be used (refer to Figure 20), although this will increase crosstalk. The dc gain of the AD8180 and AD8182 is almost independent of load for R_L > 10 kΩ. For heavier loads, the dc gain is approximately that of the voltage divider formed by the output impedance of the mux (typically 27 Ω) and R_L.

High speed disable clamp circuits at the bases of Q5–Q8 (not shown) allow the buffers to turn off quickly and cleanly without dissipating much power once off. Moreover, these clamps shunt displacement currents flowing through the junction capacitances of Q1–Q4 away from the bases of Q5–Q8 and to ac ground through low impedances. The two-pole high pass frequency response of the T switch formed by these clamps is a significant improvement over the one-pole high pass response of a simple series CMOS switch. As a result, board and package parasitics, especially stray capacitance between inputs and outputs may limit the achievable crosstalk and off isolation.

LAYOUT CONSIDERATIONS:

Realizing the high speed performance attainable with the AD8180 and AD8182 requires careful attention to board layout and component selection. Proper RF design techniques and low parasitic component selection are mandatory.

Wire wrap boards, prototype boards, and sockets are not recommended because of their high parasitic inductance and capacitance. Instead, surface-mount components should be soldered directly to a printed circuit board (PCB). The PCB should have a ground plane covering all unused portions of the component side of the board to provide a low impedance ground path. The ground plane should be removed from the area near input and output pins to reduce stray capacitance.

Chip capacitors should be used for supply bypassing. One end of the capacitor should be connected to the ground plane and the other within 1/4 inch of each power pin. An additional large (4.7 µF–10 µF) tantalum capacitor should be connected in parallel with each of the smaller capacitors for low impedance supply bypassing over a broad range of frequencies.

Signal traces should be as short as possible. Stripline or microstrip techniques should be used for long signal traces (longer than about 1 inch). These should be designed with a characteristic impedance of 50 Ω or 75 Ω and be properly terminated at the end using surface mount components.

Careful layout is imperative to minimize crosstalk. Guards (ground or supply traces) must be run between all signal traces to limit direct capacitive coupling. Input and output signal lines should fan out away from the mux as much as possible. If multiple signal layers are available, a buried stripline structure having ground plane above, below, and between signal traces will have the best crosstalk performance.

Return currents flowing through termination resistors can also increase crosstalk if these currents flow in sections of the finite-impedance ground circuit that is shared between more than one input or output. Minimizing the inductance and resistance of the ground plane can reduce this effect, but further care should be taken in positioning the terminations. Terminating cables directly at the connectors will minimize the return current flowing on the board, but the signal trace between the connector and the mux will look like an open stub and will degrade the frequency response. Moving the termination resistors close to the input pins will improve the frequency response, but the terminations from neighboring inputs should not have a common ground return.

APPLICATIONS

Multiplexing two RGB Video Sources

A common video application requires two RGB sources to be multiplexed together before the selected signal is applied to a monitor. Typically one source would be the PC's normal output, the second source might be a specialized source such as MPEG video. Figure 23 shows how such a circuit could be realized using the AD8180 and AD8182 and three current feedback op amps. The video inputs to the multiplexers are terminated with 75 Ω resistors. This has the effect of halving the signal amplitude of the applied signals.

Because all three multiplexers are permanently active, the $\overline{\text{ENABLE}}$ pins are tied permanently low. The three SELECT pins are tied together and this signal is used to select the source. In order to drive a 75 Ω back terminated load (R_L = 150 Ω), the multiplexer outputs are buffered using the AD8001 current feedback op amp. A gain of two compensates for the signal halving by the AD8001 output back termination resistor so that the system has an overall gain of unity.

If lower speed and crosstalk can be tolerated, either of the triple op amps, AD8013 or AD8073, can replace the three AD8001 op amps in the above circuit. Because both devices have bandwidths in the 100 MHz to 140 MHz range at a gain of +2, these amplifiers will dominate the frequency response of the circuit.

With no signal present, the total quiescent current of the circuit in Figure 23 is 25.6 mA (3.8 mA + 6.8 mA + 3 × 5 mA), or about 8.5 mA per channel. If either the AD8013 or AD8073 are used, the quiescent current will decrease to about 6.5 mA per channel.

To reduce power consumption further, three AD8011 single op amps can be used. With a quiescent current of 1 mA, this will reduce the per channel quiescent current to about 4.5 mA.

Table II. Amplifier Options for RGB Multiplexer

Op Amp	Comments
AD8001	Highest Bandwidth, 440 MHz (G = +2), I_{SY} = 5 mA
AD8011	Lower Power Consumption, Bandwidth (G = +2) = 210 MHz, I_{SY} = 1 mA
AD8013	Triple Op Amp, Bandwidth (G = +2) = 140 MHz, I_{SY} = 3.4 mA
AD8073	Lower Power Triple Op Amp, Bandwidth (G = +2) = 100 MHz, I_{SY} = 3.5 mA

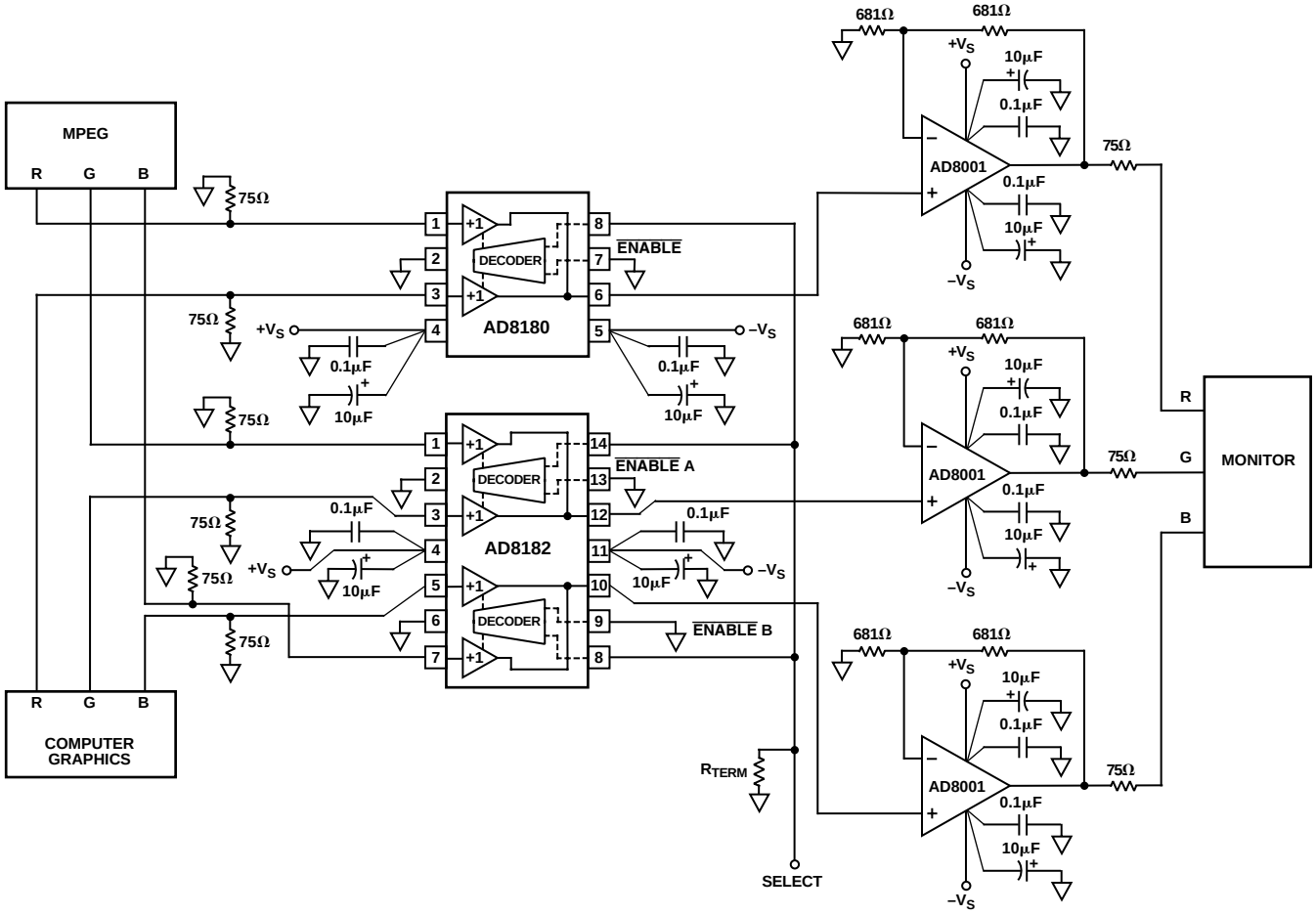

Figure 23. Multiplexing Two Component Video Sources

Picture-in-Picture or Pixel Switching

Many high end display systems require simultaneous display of two video pictures (from two different sources) on one screen. Video conferencing is one such example. In this case the remote site might be displayed as the main picture with a picture of the local site "inset" for monitoring purposes. The circuit in Figure 23 could also be used to implement this "picture-in-picture" application.

Implementing a picture-in-picture algorithm is difficult for several reasons. Both sources are being displayed simultaneously (i.e., during the same frame), both sources are in real time, and both must be synchronized. Figure 24 shows the raster scanning that takes place in all monitors. During every horizontal scan that includes part of the inset, the source must be switched twice (i.e., from main to inset and from inset to main). To avoid screen artifacts, it is critical that switching is clean and fast. The AD8180 and AD8182, in the above application, switch and settle to 0.1% accuracy in 14 ns. We quadratically add this value to the 10 ns settling time of the AD8001, and get an overall settling time of 17.2 ns. This yields a sharp, artifact-free border between the inset and the main video.

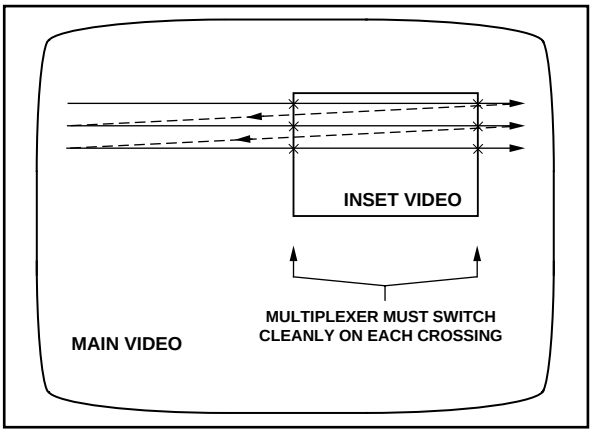

Figure 24. "Picture-in-Picture," Pixel Switching

Color Document Scanner

Figure 25 shows a block diagram of a Color Document Scanner. Charge Coupled Devices (CCDs) find widespread use in scanner applications. A monochrome CCD delivers a serial stream of voltage levels, each level being proportional to the light shining on that cell. In the case of the color image scanner shown, there are three output streams, representing red, green and blue. Interlaced with the stream of voltage levels is a voltage representing the reset level (or black level) of each cell. A Correlated Double Sampler (CDS) subtracts these two voltages from each other in order to eliminate the relatively large offsets which are common with CCDs.

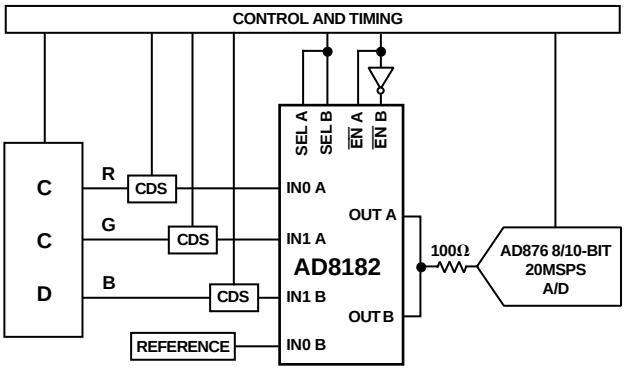

4:1 MUX TRUTH TABLE

SEL A, SEL B	$\overline{ENA}$, ENB	OUTA, OUTB
0	0	IN0A
0	1	IN0B
1	0	IN1A
1	1	IN1B

Figure 25. Color Document Scanner

The next step in the data acquisition process involves digitizing the three signal streams. Assuming that the analog to digital converter chosen has a fast enough sample rate, multiplexing the three streams into a single ADC is generally more economic than using one ADC per channel. In the example shown, we use the two 2-to-1 multiplexers in the AD8182 to create a 4-to-1 multiplexer. The enable control pins on the multiplexers allow the outputs to be wired directly together.

Because of its high bandwidth, the AD8182 is capable of driving the switched capacitor input stage of the AD876 without additional buffering. In addition to having the required the bandwidth, it is necessary to consider the settling time of the multiplexer. In this case, the ADC has a sample rate of 20 MHz which corresponds to a sampling period of 50 ns. Typically, one phase of the sampling clock is used for conversion (i.e., all levels are held steady) and the other phase is used for switching and settling to the next channel. Assuming a 50% duty cycle, the signal chain must settle within 25 ns. With a settling time to 0.1% of 14 ns, the multiplexer easily satisfies this criterion.

In the example shown, the fourth (spare) channel of the AD8182 is used to measure a reference voltage. This voltage would probably be measured less frequently than the R, G and B signals. Multiplexing a reference voltage offers the advantage that any temperature drift effects caused by the multiplexer will equally impact the reference voltage and the to-be-measured signals. If the fourth channel is unused, it is good design practice to tie this input to ground.

EVALUATION BOARD

Evaluation boards for the AD8180R and AD8182R are available which have been carefully laid out and tested to demonstrate the specified high speed performance of the devices. Figure 26 and Figure 27 show the schematics of the AD8180 and AD8182 evaluation boards respectively. For ordering information, please refer to the Ordering Guide.

Because the footprint of the AD8180 fits directly on to that of the AD8182, one board layout can be used for both devices. In the case of the AD8180, only the top half of the board is populated.

Figure 28 shows the silkscreen of the component side and Figure 30 shows the silkscreen of the solder side. Figures 29 and 31 show the layout of the component side and solder side respectively.

The evaluation board is provided with 49.9 Ω termination resistors on all inputs. This is to allow the performance to be evaluated at very high frequencies where 50 Ω termination is most popular. To use the evaluation board in video applications, the termination resistors should be replaced with 75 Ω resistors.

The multiplexer outputs are loaded with 4.99 kΩ resistors. In order to avoid large gain errors, these load resistors should be greater than or equal to 1 kΩ. For connection to external instruments, oscilloscope scope probe adapters are provided. This allows direct connection of FET probes to the board. For verification of data sheet specifications, use of FET probes with a bandwidth > 1 GHz is recommended because of their low input capacitance. The probe adapters used on the board have the same footprint as SMA, SMB and SMC type connectors allowing easy replacement if necessary.

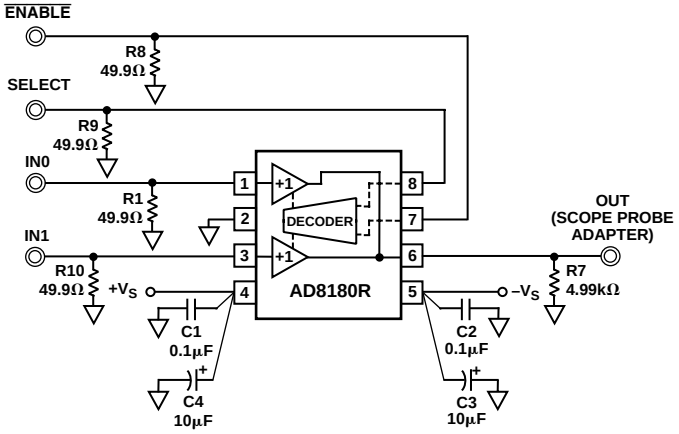

Figure 26. AD8180R Evaluation Board

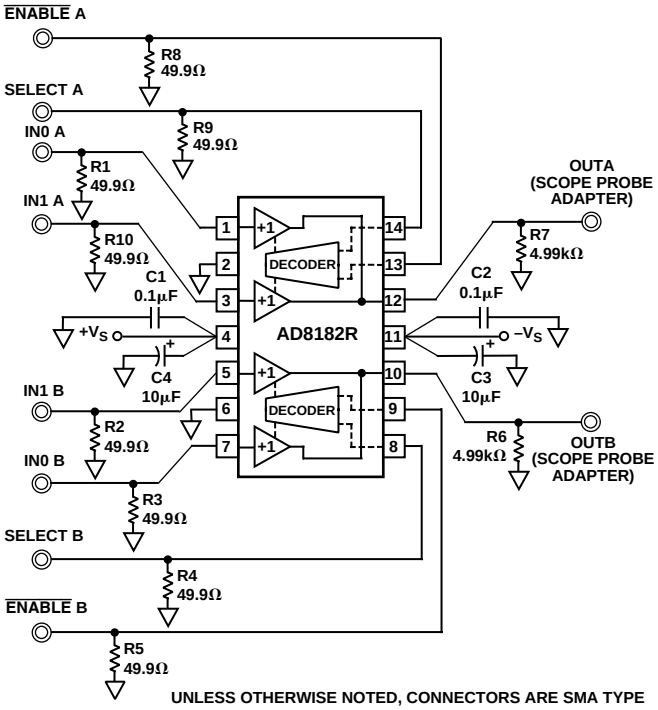

Figure 27. AD8182R Evaluation Board

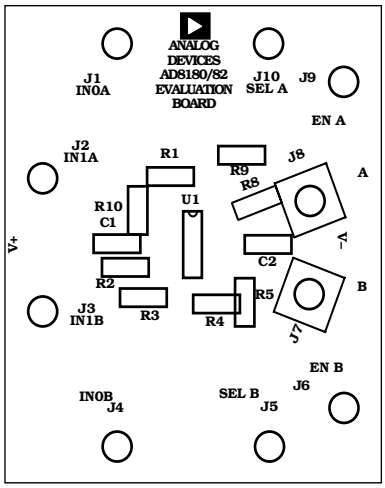

Figure 28. Component Side Silkscreen

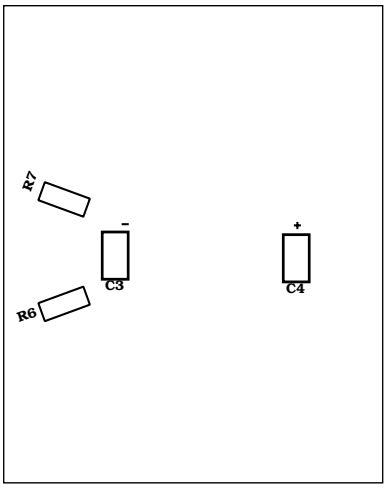

Figure 30. Solder Side Silkscreen

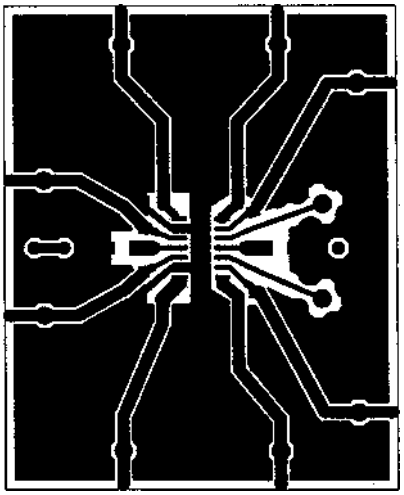

Figure 29. Board Layout (Component Side)

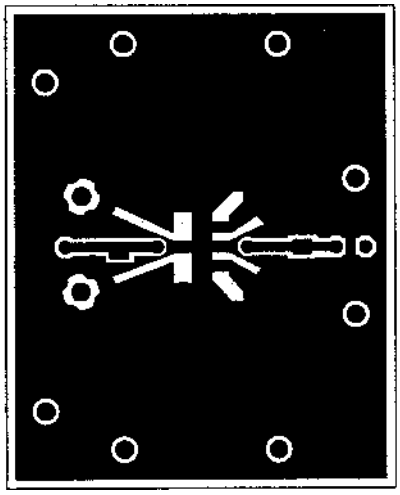

Figure 31. Board Layout (Solder Side)

NOTES

1. AD8180R/AD8182R Evaluation Board inputs are configured with 50 Ω impedance striplines. This FR4 board type has the following stripline dimensions: 60-mil width, 12-mil gap between center conductor and outside ground plane "islands," and 62-mil board thickness.
2. Several types of SMA connectors can be mounted on this board: the side-mount type, which can be easily installed at the edges of the board, and the top-mount type, which is placed on top. When using the top-mount SMA connector, it is recommended that the stripline on the outside 1/8" of the board edge be removed with an X-Acto blade as this unused stripline acts as an open stub, which could degrade the small-signal frequency response of the mux.
3. Input termination resistor placement on the evaluation board is critical to reducing crosstalk. Each termination resistor is oriented so that ground return currents flow counterclockwise to a ground plane "island." Although the direction of this ground current flow is arbitrary, it is important that no two input or output termination resistors share a connection to the same ground "island."

OUTLINE DIMENSIONS

Dimensions shown in inches and (mm).

8-Lead Plastic DIP (N-8)

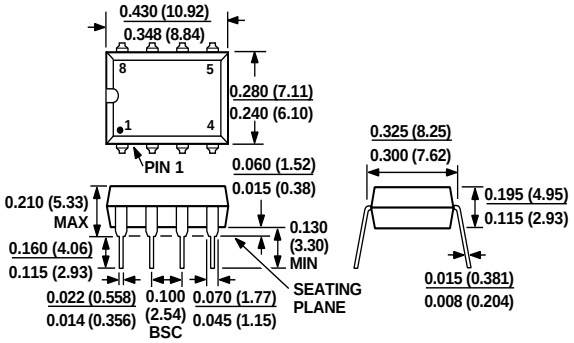

14-Lead Plastic DIP (N-14)

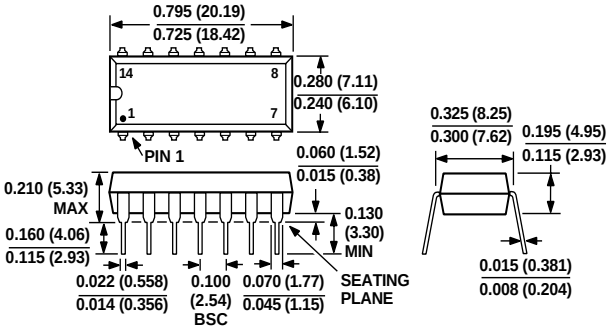

8-Lead Plastic SOIC (SO-8)

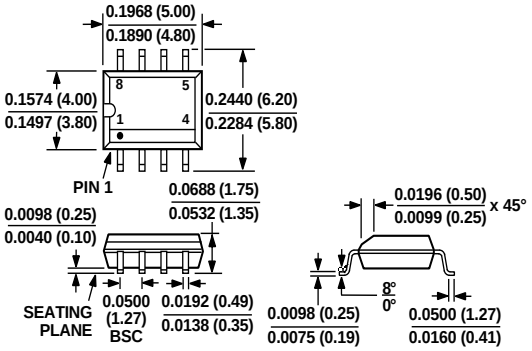

14-Lead SOIC (R-14)

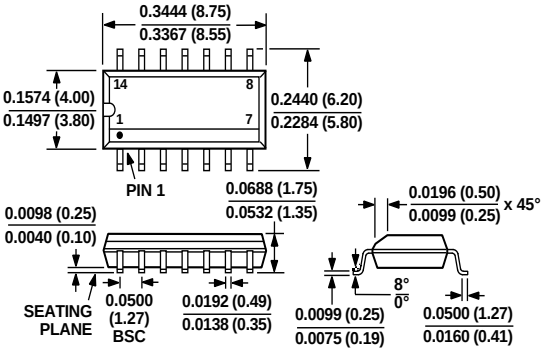

C2182a–0–1/00 (rev. B)

PRINTED IN U.S.A.