Description

The 9ZXL04x1E/9ZXL06x1E/9ZXL08x1E/9ZXL12x1E family of Zero-Delay/Fanout Buffers (ZDB, FOB) are 2nd-generation enhanced performance buffers for PCIe and CPU applications. The family meets all published QPI/UPI, DB2000Q and PCIe Gen1–5 jitter specifications. Devices range from 4 to 12 outputs, with each output having an OE# pin to support the PCIe CLKREQ# function for low power states. All devices meet DB2000Q, DB1200ZL and DB800ZL jitter and skew requirements.

PCIe Clocking Architectures

- Common Clocked (CC)
- Independent Reference (IR) with and without spread spectrum (SRIS, SRNS)

Key Specifications

- Fanout Buffer Mode additive phase jitter:
  - PCIe Gen5 CC < 15fs RMS
  - DB2000Q additive jitter < 25fs RMS
  - QPI/UPI 11.4GB/s < 40fs RMS
  - IF-UPI additive jitter < 70fs RMS
- ZDB Mode phase jitter:
  - PCIe Gen5 CC < 24fs RMS
  - QPI/UPI 11.4GB/s < 110fs RMS
  - IF-UPI additive jitter < 130fs RMS
- Cycle-to-cycle jitter < 50ps
- Output-to-output skew < 50 ps

Features

- 4–12 Low-power HCSL (LP-HCSL) outputs
- Integrated terminations eliminate up to 4 resistors per output pair
- Dedicated OE# pins support PCIe CLKREQ# function
- Up to 9 selectable SMBus addresses (9ZXL12)
- Selectable PLL bandwidths minimizes jitter peaking in cascaded PLL topologies
- Hardware/SMBus control of ZDB and FOB modes
- Spread-spectrum compatible
- 1–400MHz FOB operation (all devices)
- 100MHz and 133.33MHz ZDB mode (9ZXL12, 9ZXL08)
- 100MHz ZDB mode (9ZXL06, 9ZXL04)
- -40°C to +85°C operating temperature range (all devices)
- -40°C to +105°C operating temperature range (9ZXL08)
- Package information: see Ordering Information for details

Typical Applications

- Servers/High-performance Computing
- nVME Storage
- Networking
- Accelerators
- Industrial Control

Block Diagram

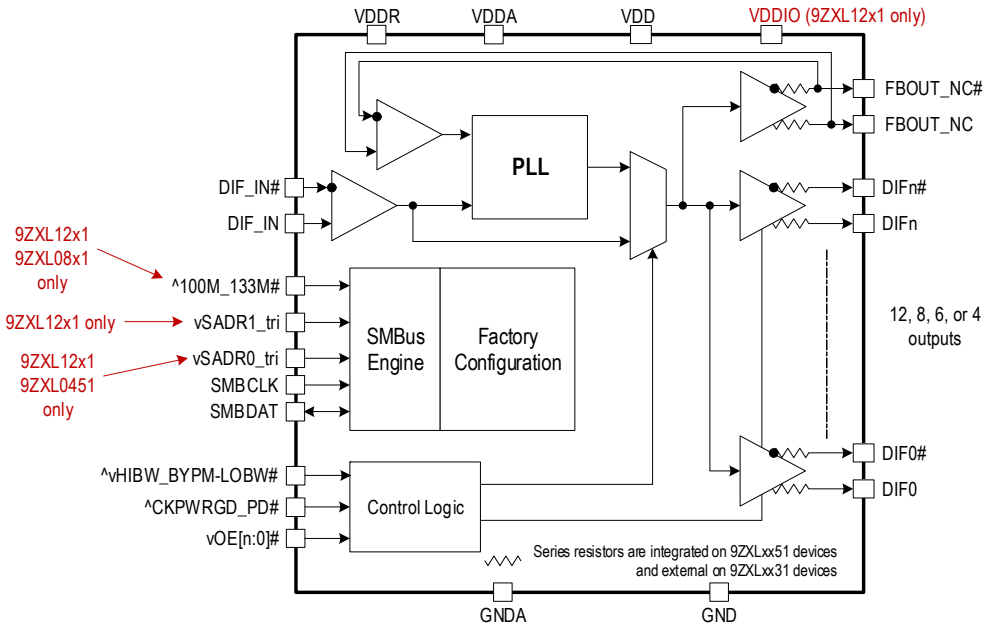

Contents

Description . . . 1
PCIe Clocking Architectures. . . . 1
Key Specifications . . . 1
Features . . . 1
Typical Applications . . . 1
Block Diagram . . . 1
Pin Assignments. . . . 3
9ZXL0451E Pin Assignment . . . 3
9ZXL06x1E Pin Assignment . . . 4
9ZXL08x1E Pin Assignment . . . 5
9ZXL12x1E Pin Assignment . . . 6
Pin Descriptions . . . 7
Absolute Maximum Ratings . . . 10
Thermal Characteristics . . . 10
Electrical Characteristics . . . 11
Power Management . . . 19
Test Loads . . . 20
General SMBus Serial Interface Information . . . 22
How to Write . . . 22
How to Read . . . 22
Package Outline Drawings . . . 26
Marking Diagrams . . . 26
9ZXL04x1 . . . 26
9ZXL06x1 . . . 27
9ZXL08x1 (industrial temperature range) . . . 27
9ZXL08x1 (extended temperature range) . . . 28
9ZXL12x1 . . . 28
Ordering Information . . . 29
Revision History . . . 31

Pin Assignments

9ZXL0451E Pin Assignment

Figure 1. Pin Assignments for 5 × 5 mm 32-VFQFPN Package – Top View

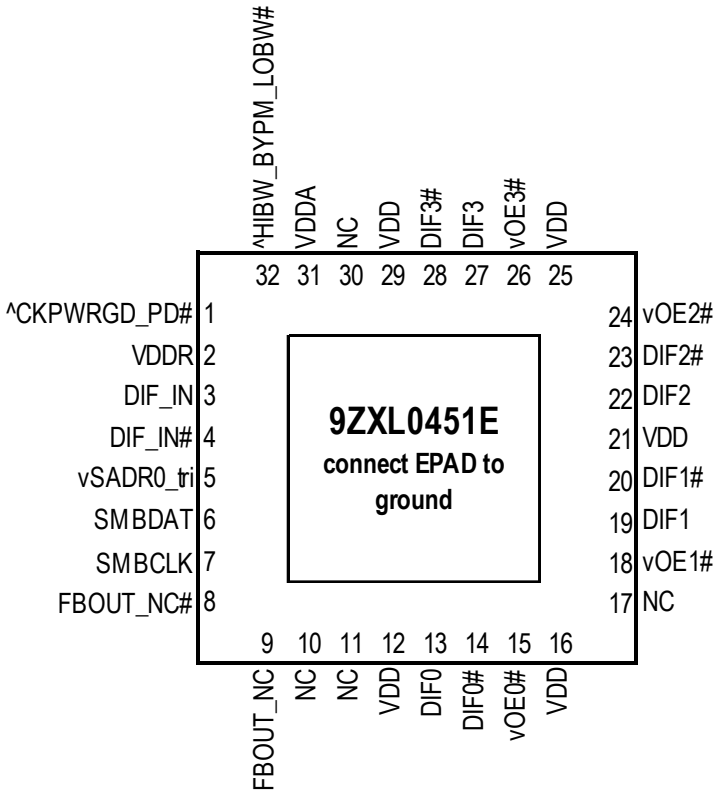

5 × 5mm, 32-VFQFPN, 0.5mm pitch

^ prefix indicates internal 120kOhm pull-up resistor

v prefix indicates internal 120kOhm pull-down resistor

9ZXL06x1E Pin Assignment

Figure 2. Pin Assignments for 5 × 5 mm 40-VFQFPN Package – Top View

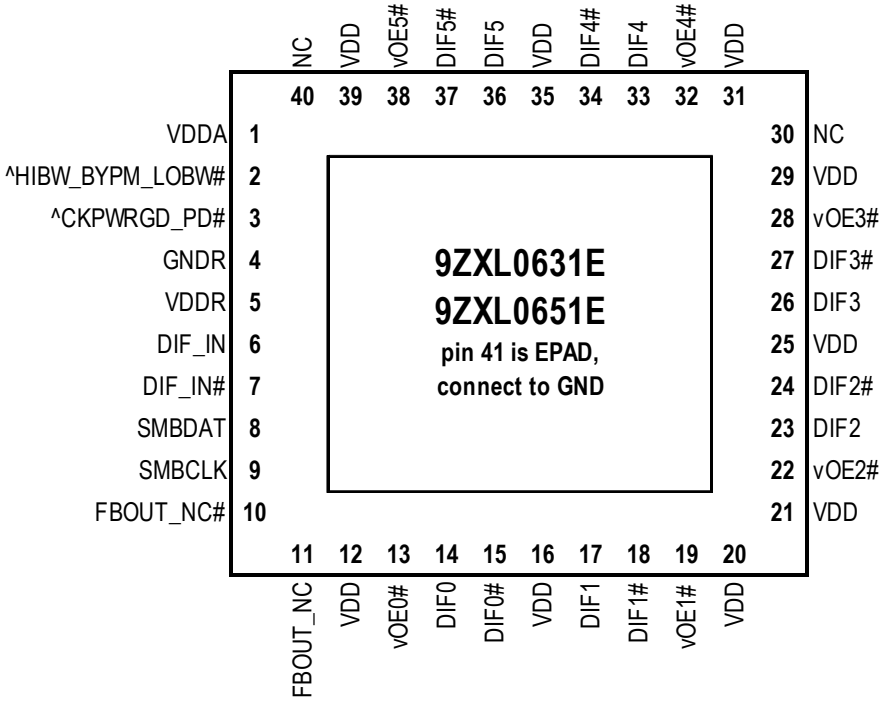

5 × 5mm, 40-VFQFPN, 0.4mm pad pitch

Pins with ^ prefix have internal 120kOhm pull-up
Pins with v prefix have internal 120kOhm pull-down

9ZXL08x1E Pin Assignment

Figure 3. Pin Assignments for 6 × 6 mm 48-VFQFPN Package – Top View

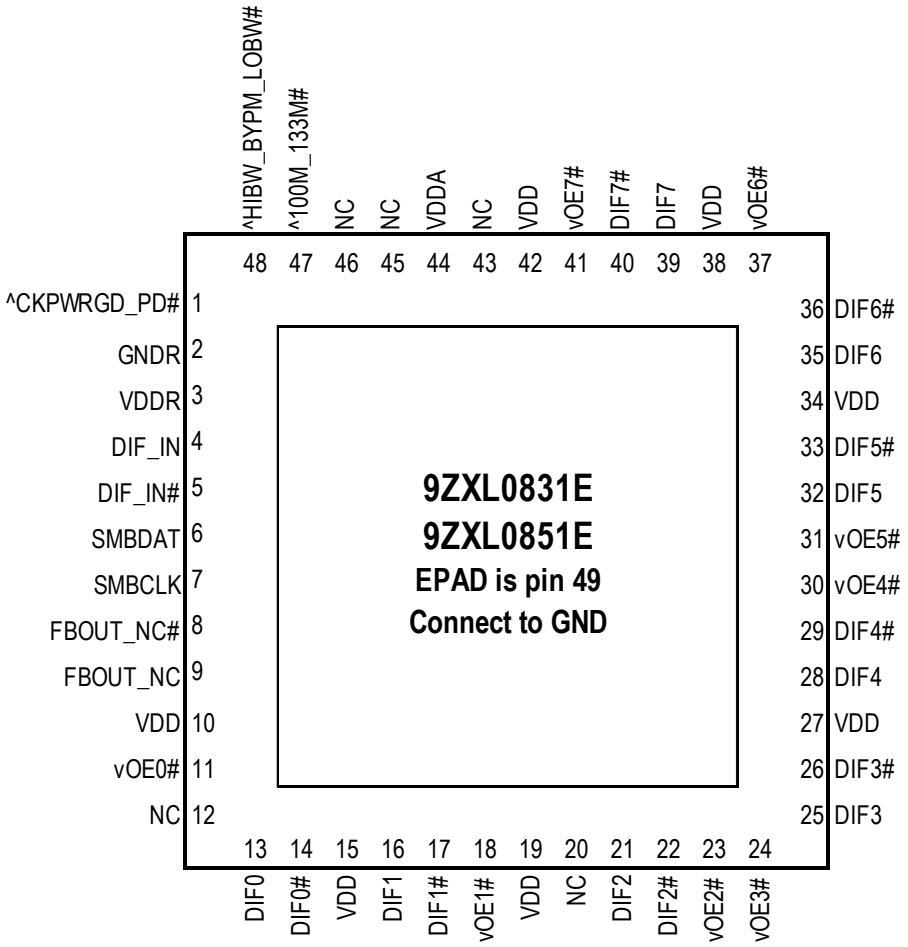

6 × 6mm, 48-VFQFPN, 0.4mm pad pitch

Pins with ^ prefix have internal 120kOhm pull-up
Pins with v prefix have internal 120kOhm pull-down

9ZXL12x1E Pin Assignment

Figure 4. Pin Assignments for 9 × 9 mm 64-VFQFPN Package – Top View

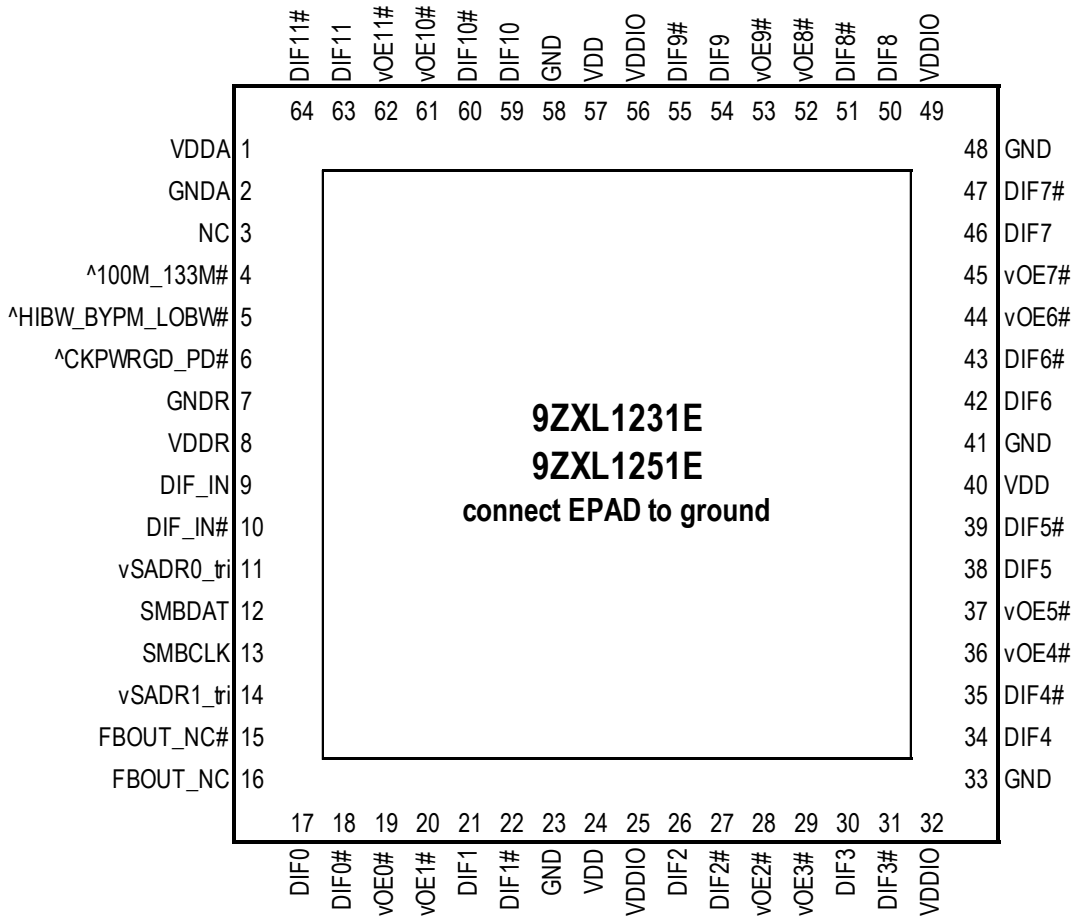

9 × 9mm 64-VFQFPN, 0.5mm pad pitch

Pins with ^ prefix have internal 120kOhm pull-up

Pins with v prefix have internal 120kOhm pull-down

Pin Descriptions

Table 1. Pin Descriptions

Name	Type	Description	9ZXL12x1 Pin No.	9ZXL08x1 Pin No.	9ZXL06x1 Pin No.	9ZXL04x1 Pin No.
^100M_133M#	Latched In	3.3V Input to select operating frequency. This pin has an internal pull-up resistor. See Frequency Selection (PLL Mode) for definition.	4	47	—	—
^CKPWRGD_PD#	Input	Input notifies device to sample latched inputs and start up on first high assertion. Low enters Power Down Mode, subsequent high assertions exit Power Down Mode. This pin has internal pull-up resistor.	6	1	3	1
^HIBW_BYPM_LOBW#	Latched In	Tri-level input to select High BW, Bypass or Low BW Mode. This pin has an internal pull-up resistor. See PLL Operating Mode table for details.	5	48	2	32
DIF_IN	Input	HCSL true input.	9	4	6	3
DIF_IN#	Input	HCSL complementary input.	10	5	7	4
DIF0	Output	Differential true clock output.	17	13	14	13
DIF0#	Output	Differential complementary clock output.	18	14	15	14
DIF1	Output	Differential true clock output.	21	16	17	19
DIF1#	Output	Differential complementary clock output.	22	17	18	20
DIF10	Output	Differential true clock output.	59	—	—	—
DIF10#	Output	Differential complementary clock output.	60	—	—	—
DIF11	Output	Differential true clock output.	63	—	—	—
DIF11#	Output	Differential complementary clock output.	64	—	—	—
DIF2	Output	Differential true clock output.	26	21	23	22
DIF2#	Output	Differential complementary clock output.	27	22	24	23
DIF3	Output	Differential true clock output.	30	25	26	27
DIF3#	Output	Differential complementary clock output.	31	26	27	28
DIF4	Output	Differential true clock output.	34	28	33	n/a
DIF4#	Output	Differential complementary clock output.	35	29	34	n/a
DIF5	Output	Differential true clock output.	38	32	36	n/a
DIF5#	Output	Differential complementary clock output.	39	33	37	n/a
DIF6	Output	Differential true clock output.	42	35	—	—
DIF6#	Output	Differential complementary clock output.	43	36	—	—
DIF7	Output	Differential true clock output.	46	39	—	—
DIF7#	Output	Differential complementary clock output.	47	40	—	—
DIF8	Output	Differential true clock output.	50	—	—	—
DIF8#	Output	Differential complementary clock output.	51	—	—	—
DIF9	Output	Differential true clock output.	54	—	—	—
DIF9#	Output	Differential complementary clock output.	55	—	—	—

Table 1. Pin Descriptions (Cont.)

Name	Type	Description	9ZXL12x1 Pin No.	9ZXL08x1 Pin No.	9ZXL06x1 Pin No.	9ZXL04x1 Pin No.
EPAD	GND	Connect epad to ground.	65	49	41	33
FBOUT_NC	Output	True half of differential feedback output. This pin should NOT be connected to anything outside the chip. It exists to provide delay path matching to get 0 propagation delay.	16	9	11	9
FBOUT_NC#	Output	Complementary half of differential feedback output. This pin should NOT be connected to anything outside the chip. It exists to provide delay path matching to get 0 propagation delay.	15	8	10	8
GND	GND	Ground pin.	23	49	41	33
GND	GND	Ground pin.	33	49	41	n/a
GND	GND	Ground pin.	41	49	—	—
GND	GND	Ground pin.	48	49	—	—
GND	GND	Ground pin.	58	—	—	—
GNDA	GND	Ground pin for the PLL core.	2	49	41	33
GNDR	GND	Analog ground pin for the differential input (receiver).	7	2	4	33
NC	—	No connection.	3	12, 20, 43, 45, 46	30, 40	10, 11, 17, 30
SMBCLK	Input	Clock pin of SMBUS circuitry.	13	7	9	7
SMBDAT	I/O	Data pin of SMBUS circuitry.	12	6	8	6
VDD	Power	Power supply, nominally 3.3V.	24	10, 15, 19, 27, 34, 38, 42	12, 16, 20, 21, 25, 29, 31, 35, 39	12, 16, 21, 25, 29
VDD	Power	Power supply, nominally 3.3V.	40	—	—	—
VDD	Power	Power supply, nominally 3.3V.	57	—	—	—
VDDA	Power	Power supply for PLL core.	1	44	1	31
VDDIO	Power	Power supply for differential outputs.	25	—	—	—
VDDIO	Power	Power supply for differential outputs.	32	—	—	—
VDDIO	Power	Power supply for differential outputs.	49	—	—	—
VDDIO	Power	Power supply for differential outputs.	56	—	—	—
VDDR	Power	Power supply for differential input clock (receiver). This VDD should be treated as an analog power rail and filtered appropriately. Nominally 3.3V.	8	3	5	2
vOE0#	Input	Active low input for enabling output 0. This pin has an internal pull-down. 1 = disable output, 0 = enable output.	19	11	13	15
vOE1#	Input	Active low input for enabling output 1. This pin has an internal pull-down. 1 = disable output, 0 = enable output.	20	18	19	18
vOE10#	Input	Active low input for enabling output 10. This pin has an internal pull-down. 1 = disable output, 0 = enable output.	61	—	—	—

Table 1. Pin Descriptions (Cont.)

Name	Type	Description	9ZXL12x1 Pin No.	9ZXL08x1 Pin No.	9ZXL06x1 Pin No.	9ZXL04x1 Pin No.
vOE11#	Input	Active low input for enabling output 11. This pin has an internal pull-down. 1 = disable output, 0 = enable output.	62	—	—	—
vOE2#	Input	Active low input for enabling output 2. This pin has an internal pull-down. 1 = disable output, 0 = enable output.	28	23	22	24
vOE3#	Input	Active low input for enabling output 3. This pin has an internal pull-down. 1 = disable output, 0 = enable output.	29	24	28	26
vOE4#	Input	Active low input for enabling output 4. This pin has an internal pull-down. 1 = disable output, 0 = enable output.	36	30	32	—
vOE5#	Input	Active low input for enabling output 5. This pin has an internal pull-down. 1 = disable output, 0 = enable output.	37	31	38	—
vOE6#	Input	Active low input for enabling output 6. This pin has an internal pull-down. 1 = disable output, 0 = enable output.	44	37	—	—
vOE7#	Input	Active low input for enabling output 7. This pin has an internal pull-down. 1 = disable output, 0 = enable output.	45	41	—	—
vOE8#	Input	Active low input for enabling output 8. This pin has an internal pull-down. 1 = disable output, 0 = enable output.	52	n/a	—	—
vOE9#	Input	Active low input for enabling output 9. This pin has an internal pull-down. 1 = disable output, 0 = enable output.	53	—	—	—
vSADR0_tri	Input	SMBus address bit. This is a tri-level input that works in conjunction with other SADR pins, if present, to decode SMBus Addresses. It has an internal pull down resistor. See the SMBus Addresses table.	11	—	—	5
vSADR1_tri	Input	SMBus address bit. This is a tri-level input that works in conjunction with other SADR pins, if present, to decode SMBus Addresses. It has an internal pull down resistor. See the SMBus Addresses table.	14	—	—	—

Absolute Maximum Ratings

The absolute maximum ratings are stress ratings only. Stresses greater than those listed below can cause permanent damage to the device. Functional operation of the 9ZXL04x1E/9ZXL06x1E/9ZXL08x1E/9ZXL12x1E at absolute maximum ratings is not implied. Exposure to absolute maximum rating conditions may affect device reliability.

Table 2. Absolute Maximum Ratings

Parameter	Symbol	Conditions	Minimum	Maximum	Units	Notes
Supply Voltage	V_{DDX}			3.9	V	1,2
Input Low Voltage	V_{IL}		GND - 0.5		V	1
Input High Voltage	V_{IH}	Except for SMBus interface		V_{DD} + 0.5	V	1,3
Input High Voltage, SMBus	V_{IHSMB}	SMBus clock and data pins.		3.9	V	1
Storage Temperature	Ts		-65	150	°C	1
Junction Temperature	Tj			125	°C	1
Input ESD Protection	ESD prot	Human Body Model.	2500		V	1

[1] Guaranteed by design and characterization, not 100% tested in production.

[2] Operation under these conditions is neither implied nor guaranteed.

[3] Not to exceed 3.9V.

Thermal Characteristics

Table 3. Thermal Characteristics

Parameter	Symbol	Conditions	Package	Typical Values	Units	Notes
9ZXL04x1 Thermal Resistance	θ_{JC}	Junction to case.	NLG32	32	°C/W	1
	θ_{Jb}	Junction to base.		2	°C/W	1
	θ_{JA0}	Junction to air, still air.		44	°C/W	1
	θ_{JA1}	Junction to air, 1 m/s air flow.		37	°C/W	1
	θ_{JA3}	Junction to air, 3 m/s air flow.		32.5	°C/W	1
	θ_{JA5}	Junction to air, 5 m/s air flow.		30.9	°C/W	1
9ZXL06x1 Thermal Resistance	θ_{JC}	Junction to case.	NDG40	32	°C/W	1
	θ_{Jb}	Junction to base.		2	°C/W	1
	θ_{JA0}	Junction to air, still air.		44	°C/W	1
	θ_{JA1}	Junction to air, 1 m/s air flow.		37	°C/W	1
	θ_{JA3}	Junction to air, 3 m/s air flow.		33	°C/W	1
	θ_{JA5}	Junction to air, 5 m/s air flow.		31	°C/W	1
9ZXL08x1 Thermal Resistance	θ_{JC}	Junction to case.	NDG48	19	°C/W	1
	θ_{Jb}	Junction to base.		0	°C/W	1
	θ_{JA0}	Junction to air, still air.		30	°C/W	1
	θ_{JA1}	Junction to air, 1 m/s air flow.		23	°C/W	1
	θ_{JA3}	Junction to air, 3 m/s air flow.		20	°C/W	1
	θ_{JA5}	Junction to air, 5 m/s air flow.		19	°C/W	1

Table 3. Thermal Characteristics (Cont.)

Parameter	Symbol	Conditions	Package	Typical Values	Units	Notes
9ZXL12x1 Thermal Resistance	θ_{JC}	Junction to case.	NLG64	14	°C/W	1
	θ_{Jb}	Junction to base.		1	°C/W	1
	θ_{JA0}	Junction to air, still air.		28	°C/W	1
	θ_{JA1}	Junction to air, 1 m/s air flow.		21	°C/W	1
	θ_{JA3}	Junction to air, 3 m/s air flow.		19	°C/W	1
	θ_{JA5}	Junction to air, 5 m/s air flow.		18	°C/W	1

[1] EPAD soldered to board.

Electrical Characteristics

$T_A = T_{AMB}$. Supply voltages per normal operation conditions; see Test Loads for loading conditions.

Table 4. SMBus Parameters

Parameter	Symbol	Conditions	Minimum	Typical	Maximum	Units	Notes
SMBus Input Low Voltage	V_{ILSMB}				0.8	V	
SMBus Input High Voltage	V_{IHSMB}		2.1		V_{DDSMB}	V	
SMBus Output Low Voltage	V_{OLSMB}	At I_{PULLUP}.			0.4	V	
SMBus Sink Current	I_{PULLUP}	At V_{OL}.	4			mA	
Nominal Bus Voltage	V_{DDSMB}		2.7		3.6	V	
SCLK/SDATA Rise Time	t_{RSMB}	(Max. V_{IL} - 0.15V) to (Min. V_{IH} + 0.15V).			1000	ns	1
SCLK/SDATA Fall Time	t_{FSMB}	(Min. V_{IH} + 0.15V) to (Max. V_{IL} - 0.15V).			300	ns	1
SMBus Operating Frequency	f_{SMB}	SMBus operating frequency.			500	kHz	5

[1] Guaranteed by design and characterization, not 100% tested in production.

[2] Control input must be monotonic from 20% to 80% of input swing.

[3] Time from deassertion until outputs are > 200mV.

[4] DIF_IN input.

[5] The differential input clock must be running for the SMBus to be active.

Table 5. DIF_IN Clock Input Parameters

Parameter	Symbol	Conditions	Minimum	Typical	Maximum	Units	Notes
Input Crossover Voltage–DIF_IN	V_{CROSS}	Crossover voltage.	150		900	mV	1
Input Swing–DIF_IN	V_{SWING}	Differential value.	300			mV	1
Input Slew Rate–DIF_IN	dv/dt	Measured differentially.	0.4		8	V/ns	1,2
Input Leakage Current	I_{IN}	$V_{IN} = V_{DD}$, V_{IN} = GND.	-5		5	µA	
Input Duty Cycle	d_{tin}	Measurement from differential waveform.	45		55	%	1
Input Jitter–Cycle to Cycle	J_{DIFIn}	Differential measurement.	0		125	ps	1

[1] Guaranteed by design and characterization, not 100% tested in production.

[2] Slew rate measured through ±75mV window centered around differential zero.

Table 6. Input/Supply/Common Parameters – Normal Operating Conditions

Parameter	Symbol	Conditions	Minimum	Typical	Maximum	Units	Notes
Supply Voltage	V_{DDX}	Supply voltage for core and analog.	3.135	3.3	3.465	V	
Output Supply Voltage	V_{DDIO}	Supply voltage for DIF outputs, if present.	0.95	1.05	3.465	V	5
Ambient Operating Temperature	T_{AMB}	Extended Industrial range (T_{EXIND}).	-40	25	105	°C	7
		Industrial range (T_{IND}).	-40	25	85	°C	
Input High Voltage	V_{IH}	Single-ended inputs, except SMBus, tri-level inputs.	2		V_{DD} + 0.3	V	
Input Low Voltage	V_{IL}	Single-ended inputs, except SMBus, tri-level inputs.	GND - 0.3		0.8	V	
Input High Voltage	V_{IHtri}	Tri-level inputs.	2.2		V_{DD} + 0.3	V	
Input Mid Voltage	V_{IMtri}	Tri-level inputs.	1.2	VDD/2	1.8	V	
Input Low Voltage	V_{ILtri}	Tri-level inputs.	GND - 0.3		0.8	V	
Input Current	I_{IN}	Single-ended inputs, V_{IN} = GND, V_{IN} = V_{DD}.	-5		5	µA	
	I_{INP}	Single-ended inputs V_{IN} = 0 V; inputs with internal pull-up resistors. V_{IN} = V_{DD}; inputs with internal pull-down resistors.	-50		50	µA	
Input Frequency	F_{ibyp}	V_{DD} = 3.3 V, Bypass Mode.	1		400	MHz	
	F_{ipll}	V_{DD} = 3.3 V, 100MHz PLL Mode.	98.5	100.00	102.5	MHz	
	F_{ipll}	V_{DD} = 3.3 V, 133.33MHz PLL Mode.	132	133.33	135	MHz	6
ppm Error Contribution	ppm	ppm error contributed to input clock.		0		ppm	
Pin Inductance	L_{pin}				7	nH	1
Capacitance	C_{IN}	Logic inputs, except DIF_IN.	1.5		5	pF	1
	C_{INDIF_IN}	DIF_IN differential clock inputs.	1.5		2.7	pF	1,4
	C_{OUT}	Output pin capacitance.			6	pF	1
CLK Stabilization	t_{STAB}	From V_{DD} power-up and after input clock stabilization or de-assertion of PD# to 1st clock.		1	1.8	ms	1,2
Input SS Modulation Frequency PCIe	$f_{MODINPCIe}$	Allowable frequency for PCIe applications (Triangular modulation).	30		33	kHz	
OE# Latency	$t_{LATOE\#}$	DIF start after OE# assertion. DIF stop after OE# deassertion.	4	5	10	clocks	1,2,3
Tdrive_PD#	t_{DRVPD}	DIF output enable after. PD# de-assertion.		49	300	µs	1,3
Fall Time	t_F	Fall time of control inputs.			5	ns	2
Rise Time	t_R	Rise time of control inputs.			5	ns	2

[1] Guaranteed by design and characterization, not 100% tested in production.

[2] Control input must be monotonic from 20% to 80% of input swing.

[3] Time from deassertion until outputs are > 200mV.

[4] DIF_IN input.

[5] 9ZXL12x1 only.

[6] 9ZXL12x1 and 9ZXL08x1 only.

[7] Not all devices are available in this temperature range. See ordering information for details.

Table 7. LP-HCSL Outputs

Parameter	Symbol	Conditions	Minimum	Typical	Maximum	Specification Limit	Units	Notes
Slew Rate	dV/dt	Scope averaging on.	2	2.9	4	1 – 4	V/ns	1,2,3
Slew Rate Matching	ΔdV/dt	Single-ended measurement.		7.1	20	20	%	1,4,7
Maximum Voltage	V_{MAX}	Measurement on single ended signal using absolute value. (Scope averaging off).	700	792	850	660 – 1150	mV	7,8
Minimum Voltage	V_{MIN}		-150	-35	150	-300		7,8
Crossing Voltage (abs)	Vcross_abs	Scope averaging off.	300	372	462	250 – 550	mV	1,5,7
Crossing Voltage (var)	Δ-Vcross	Scope averaging off.		15	50	140	mV	1,6,7

[1] Guaranteed by design and characterization, not 100% tested in production.

[2] Measured from differential waveform.

[3] Slew rate is measured through the Vswing voltage range centered around differential 0V. This results in a ±150mV window around differential 0V.

[4] Matching applies to rising edge rate for Clock and falling edge rate for Clock#. It is measured using a ±75 mV window centered on the average cross point where Clock rising meets Clock# falling. The median cross point is used to calculate the voltage thresholds the oscilloscope is to use for the edge rate calculations.

[5] Vcross is defined as voltage where Clock = Clock# measured on a component test board and only applies to the differential rising edge (i.e. Clock rising and Clock# falling).

[6] The total variation of all Vcross measurements in any particular system. Note that this is a subset of Vcross_min/max (Vcross absolute) allowed. The intent is to limit Vcross induced modulation by setting Δ-Vcross to be smaller than Vcross absolute.

[7] At default SMBus settings.

[8] Includes previously separate values of +300mV overshoot and -300mV of undershoot.

Table 8. Current Consumption – 9ZXL04x1

Parameter	Symbol	Conditions	Minimum	Typical	Maximum	Units	Notes
Operating Supply Current	I_{DDA}	V_{DDA}, ZDB Mode at 100MHz.		37	44	mA	1
		V_{DDA}, Fanout Buffer Mode at 100MHz.		4	5	mA	1
	I_{DD}	All other V_{DD} pins, any mode at 100MHz.		33	40	mA	
Power Down Current	I_{DDAPD}	V_{DDA} pin, CKPWRGD_PD# = 0.		3	5	mA	1
	I_{DDPD}	All other V_{DD} pins, CKPWRGD_PD# = 0.		1	2	mA	

[1] Includes V_{DDR}.

Table 9. Current Consumption – 9ZXL06x1

Parameter	Symbol	Conditions	Minimum	Typical	Maximum	Units	Notes
Operating Supply Current	I_{DDA}	V_{DDA}, PLL Mode at 100MHz.		37	45	mA	1
		V_{DDA}, Fanout Buffer Mode at 100MHz.		4	5	mA	1
	I_{DD}	All other V_{DD} pins at 100MHz.		41	50	mA	
Power Down Current	I_{DDAPD}	V_{DDA}, CKPWRGD_PD# = 0.		3	4	mA	1
	I_{DDPD}	All other V_{DD} pins, CKPWRGD_PD# = 0.		1	2	mA	

[1] Includes V_{DDR}.

Table 10. Current Consumption – 9ZXL08x1

Parameter	Symbol	Conditions	Minimum	Typical	Maximum	Units	Notes
Operating Supply Current	I_{DDA}	V_{DDA}, PLL Mode at 100MHz.		37	45	mA	1
		V_{DDA}, Fanout Buffer Mode at 100MHz.		4	5	mA	1
	I_{DD}	All other V_{DD} pins at 100MHz.		55	68	mA	
Power Down Current	I_{DDAPD}	V_{DDA}, CKPWRGD_PD# = 0.		3	4	mA	1
	I_{DDPD}	All other V_{DD} pins, CKPWRGD_PD# = 0.		1	2	mA	

[1] Includes V_{DDR}.

Table 11. Current Consumption – 9ZXL12x1

Parameter	Symbol	Conditions	Minimum	Typical	Maximum	Units	Notes
Operating Supply Current	I_{DDA}	V_{DDA}, PLL Mode at 100MHz.		38	46	mA	1
		V_{DDA}, Fanout Buffer Mode at 100MHz.		4	5	mA	1
	I_{DD}	All other V_{DD} pins.		25	34	mA	
	I_{DDIO}	V_{DDIO} for LP-HCSL outputs, if applicable.		83	107	mA	
Power Down Current	I_{DDAPD}	V_{DDA}, CKPWRGD_PD# = 0.		3	4	mA	1
	I_{DDPD}	All other V_{DD} pins, CKPWRGD_PD# = 0.		1	2	mA	

[1] Includes V_{DDR}.

Table 12. PCIe Phase Jitter

T_{AMB} = over the specified operating range. Supply voltages per normal operation conditions. See Test Loads for loading conditions.

Parameter	Symbol	Conditions	Minimum	Typical	Maximum	Limit	Units	Notes
PCIe Phase Jitter, Low Bandwidth ZDB Mode (Common Clocked Architecture)	$t_{jphPCIeG1-CC}$	PCIe Gen1 (2.5 GT/s)		2.6	6.8	86	ps (p-p)	1,2
	$t_{jphPCIeG2-CC}$	PCIe Gen2 Hi Band (5.0 GT/s)		0.09	0.16	3	ps (RMS)	1,2
		PCIe Gen2 Lo Band (5.0 GT/s)		0.08	0.12	3.1	ps (RMS)	1,2
	$t_{jphPCIeG3-CC}$	PCIe Gen3 (8.0 GT/s)		0.05	0.07	1	ps (RMS)	1,2
	$t_{jphPCIeG4-CC}$	PCIe Gen4 (16.0 GT/s)		0.05	0.07	0.5	ps (RMS)	1,2,3,4
	$t_{jphPCIeG5-CC}$	PCIe Gen5 (32.0 GT/s)		0.018	0.022	0.15	ps (RMS)	1,2,3,5
PCIe Phase Jitter, Low Bandwidth ZDB Mode (SRIS Architecture)	$t_{jphPCIeG1-SRIS}$	PCIe Gen1 (2.5 GT/s)		8.71	8.73	N/A	ps (RMS)	1,2,6
	$t_{jphPCIeG2-SRIS}$	PCIe Gen2 (5.0 GT/s)		0.81	0.83		ps (RMS)	1,2,6
	$t_{jphPCIeG3-SRIS}$	PCIe Gen3 (8.0 GT/s)		0.329	0.335		ps (RMS)	1,2,6
	$t_{jphPCIeG4-SRIS}$	PCIe Gen4 (16.0 GT/s)		0.222	0.235		ps (RMS)	1,2,6
	$t_{jphPCIeG5-SRIS}$	PCIe Gen5 (32.0 GT/s)		0.084	0.091		ps (RMS)	1,2,6

Table 12. PCIe Phase Jitter (Cont.)

T_{AMB} = over the specified operating range. Supply voltages per normal operation conditions. See Test Loads for loading conditions.

Parameter	Symbol	Conditions	Minimum	Typical	Maximum	Limit	Units	Notes
PCIe Phase Jitter, High Bandwidth ZDB Mode (Common Clocked Architecture)	$t_{jphPCIeG1-CC}$	PCIe Gen1 (2.5 GT/s)		5.4	6.9	86	ps (p-p)	1,2
	$t_{jphPCIeG2-CC}$	PCIe Gen2 Hi Band (5.0 GT/s)		0.19	0.25	3	ps (RMS)	1,2
		PCIe Gen2 Lo Band (5.0 GT/s)		0.09	0.13	3.1	ps (RMS)	1,2
	$t_{jphPCIeG3-CC}$	PCIe Gen3 (8.0 GT/s)		0.10	0.13	1	ps (RMS)	1,2
	$t_{jphPCIeG4-CC}$	PCIe Gen4 (16.0 GT/s)		0.10	0.13	0.5	ps (RMS)	1,2,3,4
	$t_{jphPCIeG5-CC}$	PCIe Gen5 (32.0 GT/s)		0.032	0.042	0.15	ps (RMS)	1,2,3,5
PCIe Phase Jitter, High Bandwidth ZDB Mode (SRIS Architecture)	$t_{jphPCIeG1-SRIS}$	PCIe Gen1 (2.5 GT/s)		8.61	8.63	N/A	ps (RMS)	1,2,6
	$t_{jphPCIeG2-SRIS}$	PCIe Gen2 (5.0 GT/s)		0.88	0.96		ps (RMS)	1,2,6
	$t_{jphPCIeG3-SRIS}$	PCIe Gen3 (8.0 GT/s)		0.354	0.375		ps (RMS)	1,2,6
	$t_{jphPCIeG4-SRIS}$	PCIe Gen4 (16.0 GT/s)		0.271	0.305		ps (RMS)	1,2,6
	$t_{jphPCIeG5-SRIS}$	PCIe Gen5 (32.0 GT/s)		0.097	0.109		ps (RMS)	1,2,6

[1] The REFCLK jitter is measured after applying the filter functions found in PCI Express Base Specification 5.0, Revision 1.0. See the Test Loads section of the data sheet for the exact measurement setup. The worst case results for each data rate are summarized in this table. Equipment noise is removed from all results.

[2] Jitter measurements shall be made with a capture of at least 100,000 clock cycles captured by a real-time oscilloscope (RTO) with a sample rate of 20 GS/s or greater. Broadband oscilloscope noise must be minimized in the measurement. The measured PP jitter is used (no extrapolation) for RTO measurements. Alternately, jitter measurements may be used with a Phase Noise Analyzer (PNA) extending (flat) and integrating and folding the frequency content up to an offset from the carrier frequency of at least 200MHz (at 300MHz absolute frequency) below the Nyquist frequency. For PNA measurements for the 2.5 GT/s data rate, the RMS jitter is converted to peak to peak jitter using a multiplication factor of 8.83. In the case where real-time oscilloscope and PNA measurements have both been done and produce different results, the RTO result must be used.

[3] SSC spurs from the fundamental and harmonics are removed up to a cutoff frequency of 2MHz taking care to minimize removal of any non-SSC content.

[4] Note that 0.7ps RMS is to be used in channel simulations to account for additional noise in a real system.

[5] Note that 0.25ps RMS is to be used in channel simulations to account for additional noise in a real system.

[6] The PCI Express Base Specification 5.0, Revision 1.0 provides the filters necessary to calculate SRIS jitter values, however, it does not provide specification limits, hence the N/A in the “Limit” column. In general, a clock operating in an SRIS system must be twice as good as a clock operating in a Common Clock system. For RMS values, twice as good is equivalent to dividing the CC value by √2. An additional consideration is the value for which to divide by √2. The conservative approach is to divide the ref clock jitter limit, and the case can be made for dividing the channel simulation values by √2, if the ref clock is close to the Tx clock input. An example for Gen4 is as follows. A “rule-of-thumb” SRIS limit would be either 0.5ps RMS/√2 = 0.35ps RMS if the clock chip is far from the clock input, or 0.7ps RMS/√2 = 0.5ps RMS if the clock chip is near the clock input.

Table 13. Skew and Differential Jitter Parameters

Parameter	Symbol	Conditions	Minimum	Typical	Maximum	Units	Notes
CLK_IN, DIF[x:0]	t_{SPO_PLL}	Input-to-output skew in PLL Mode at 100MHz, nominal temperature and voltage.	-100	-21.3	100	ps	1,2,4,5,7
CLK_IN, DIF[x:0]	t_{PD_BYP}	Input-to-output skew in Bypass Mode at 100MHz, nominal temperature and voltage.	2	2.6	3	ns	1,2,3,5,7
CLK_IN, DIF[x:0]	t_{DSPO_PLL}	Input-to-output skew variation in PLL Mode at 100MHz, across voltage and temperature.	-50	0.0	50	ps	1,2,3,5,7
CLK_IN, DIF[x:0]	t_{DSPO_BYP}	Input-to-output skew variation in Bypass Mode at 100MHz, across voltage and temperature, T_{AMB} = 0°C to +70°C.	-250		250	ps	1,2,3,5,7
		Input-to-Output Skew variation in Bypass mode at 100MHz, across voltage and temperature, T_{AMB} = -40°C to +85°C.	-350		350	ps	1,2,3,5,7
CLK_IN, DIF[x:0]	t_{DTE}	Random differential tracking error between two 9ZX devices in Hi BW Mode.		3	5	ps (rms)	1,2,3,5,7
CLK_IN, DIF[x:0]	t_{DSSTE}	Random differential spread spectrum tracking error between two 9ZX devices in Hi BW Mode.		23	50	ps	1,2,3,5,7
DIF[x:0]	t_{SKEW_ALL}	Output-to-output skew across all outputs, common to PLL and Bypass Mode, at 100MHz.			50	ps	1,2,3,7
PLL Jitter Peaking	$j_{peak\text{-}hibw}$	LOBW#_BYPASS_HIBW = 1.	0	1.3	2.5	dB	6.7
PLL Jitter Peaking	$j_{peak\text{-}lobw}$	LOBW#_BYPASS_HIBW = 0.	0	1.3	2	dB	6.7
PLL Bandwidth	pll_{HIBW}	LOBW#_BYPASS_HIBW = 1.	2	2.6	4	MHz	7,8
PLL Bandwidth	pll_{LOBW}	LOBW#_BYPASS_HIBW = 0.	0.7	1.0	1.4	MHz	7,8
Duty Cycle	t_{DC}	Measured differentially, PLL Mode.	45	50.3	55	%	1
Duty Cycle Distortion	t_{DCD}	Measured differentially, Bypass Mode at 100MHz.	-1	0	1	%	1,9
Jitter, Cycle to Cycle	$t_{jcyc\text{-}cyc}$	PLL Mode.		14	50	ps	1,10
		Additive jitter in Bypass Mode.		0.1	5	ps	1,10

[1] Measured into fixed 2 pF load cap. Input to output skew is measured at the first output edge following the corresponding input.

[2] Measured from differential cross-point to differential cross-point. This parameter can be tuned with external feedback path, if present.

[3] All Bypass Mode Input-to-Output specs refer to the timing between an input edge and the specific output edge created by it.

[4] This parameter is deterministic for a given device.

[5] Measured with scope averaging on to find mean value.

[6] Measured as maximum pass band gain. At frequencies within the loop BW, highest point of magnification is called PLL jitter peaking.

[7] Guaranteed by design and characterization, not 100% tested in production.

[8] Measured at 3db down or half power point.

[9] Duty cycle distortion is the difference in duty cycle between the output and the input clock when the device is operated in bypass mode.

[10] Measured from differential waveform.

Table 14. Additive PCIe Phase Jitter for Fanout Buffer Mode

T_{AMB} = over the specified operating range. Supply voltages per normal operation conditions. See Test Loads for loading conditions.

Parameter	Symbol	Conditions	Minimum	Typical	Maximum	Limit	Units	Notes
Additive PCIe Phase Jitter, Fanout Buffer Mode[7] (Common Clocked Architecture)	$t_{jphPCIeG1-CC}$	PCIe Gen1 (2.5 GT/s)		1.3	1.9	86	ps (p-p)	1,2
	$t_{jphPCIeG2-CC}$	PCIe Gen2 Hi Band (5.0 GT/s)		0.089	0.126	3	ps (RMS)	1,2
		PCIe Gen2 Lo Band (5.0 GT/s)		0.023	0.034	3.1	ps (RMS)	1,2
	$t_{jphPCIeG3-CC}$	PCIe Gen3 (8.0 GT/s)		0.044	0.062	1	ps (RMS)	1,2
	$t_{jphPCIeG4-CC}$	PCIe Gen4 (16.0 GT/s)		0.044	0.062	0.5	ps (RMS)	1,2,3,4
	$t_{jphPCIeG5-CC}$	PCIe Gen5 (32.0 GT/s)		0.017	0.024	0.15	ps (RMS)	1,2,3,5
Additive PCIe Phase Jitter, Fanout Buffer Mode[7] (SRIS Architecture)	$t_{jphPCIeG1-SRIS}$	PCIe Gen1 (2.5 GT/s)		0.127	0.181	N/A	ps (RMS)	1,2,6
	$t_{jphPCIeG2-SRIS}$	PCIe Gen2 (5.0 GT/s)		0.112	0.159		ps (RMS)	1,2,6
	$t_{jphPCIeG3-SRIS}$	PCIe Gen3 (8.0 GT/s)		0.029	0.042		ps (RMS)	1,2,6
	$t_{jphPCIeG4-SRIS}$	PCIe Gen4 (16.0 GT/s)		0.031	0.043		ps (RMS)	1,2,6
	$t_{jphPCIeG5-SRIS}$	PCIe Gen5 (32.0 GT/s)		0.027	0.038		ps (RMS)	1,2,6

[1] The REFCLK jitter is measured after applying the filter functions found in PCI Express Base Specification 5.0, Revision 1.0. See the Test Loads section of the data sheet for the exact measurement setup. The total Ref Clk jitter limits for each data rate are listed for convenience. The worst case results for each data rate are summarized in this table. If oscilloscope data is used, equipment noise is removed from all results.

[2] Jitter measurements shall be made with a capture of at least 100,000 clock cycles captured by a real-time oscilloscope (RTO) with a sample rate of 20 GS/s or greater. Broadband oscilloscope noise must be minimized in the measurement. The measured PP jitter is used (no extrapolation) for RTO measurements. Alternately, jitter measurements may be used with a Phase Noise Analyzer (PNA) extending (flat) and integrating and folding the frequency content up to an offset from the carrier frequency of at least 200MHz (at 300MHz absolute frequency) below the Nyquist frequency. For PNA measurements for the 2.5 GT/s data rate, the RMS jitter is converted to peak to peak jitter using a multiplication factor of 8.83. In the case where real-time oscilloscope and PNA measurements have both been done and produce different results, the RTO result must be used.

[3] SSC spurs from the fundamental and harmonics are removed up to a cutoff frequency of 2MHz taking care to minimize removal of any non-SSC content.

[4] Note that 0.7ps RMS is to be used in channel simulations to account for additional noise in a real system.

[5] Note that 0.25ps RMS is to be used in channel simulations to account for additional noise in a real system.

[6] The PCI Express Base Specification 5.0, Revision 1.0 provides the filters necessary to calculate SRIS jitter values, however, it does not provide specification limits, hence the N/A in the “Limit” column. In general, a clock operating in an SRIS system must be twice as good as a clock operating in a Common Clock system. For RMS values, twice as good is equivalent to dividing the CC value by $\sqrt{2}$. An additional consideration is the value for which to divide by $\sqrt{2}$. The conservative approach is to divide the ref clock jitter limit, and the case can be made for dividing the channel simulation values by $\sqrt{2}$, if the ref clock is close to the Tx clock input. An example for Gen4 is as follows. A “rule-of-thumb” SRIS limit would be either 0.5ps RMS/$\sqrt{2}$ = 0.35ps RMS if the clock chip is far from the clock input, or 0.7ps RMS/$\sqrt{2}$ = 0.5ps RMS if the clock chip is near the clock input.

[7] Additive jitter for RMS values is calculated by solving for “b” where $b = \sqrt{(c^2 - a^2)}$ and where “a” is rms input jitter and “c” is rms output jitter.

Table 15. Filtered Phase Jitter Parameters – QPI/UPI, IF-UPI and DB2000Q

Parameter	Symbol	Conditions	Minimum	Typical	Maximum	Specification Limit	Units	Notes
Phase Jitter, ZDB Mode	t_{jphQPI_UPI}	QPI and UPI (100MHz or 133MHz, 4.8Gb/s, 6.4Gb/s 12UI)		0.16	0.37	0.5	ps (rms)	1,2
		QPI and UPI (100MHz, 8.0Gb/s, 12UI)		0.10	0.15	0.3	ps (rms)	1,2
		QPI and UPI (100MHz, ≤11.4Gb/s, 12UI)		0.08	0.12	0.2	ps (rms)	1,2
Additive Phase Jitter, Fanout Mode	t_{jphQPI_UPI}	QPI and UPI (100MHz or 133MHz, 4.8Gb/s, 6.4Gb/s 12UI)		0.03	0.05	N/A	ps (rms)	1,2,3
		QPI and UPI (100MHz, 8.0Gb/s, 12UI)		0.03	0.05		ps (rms)	1,2,3
		QPI and UPI (100MHz, ≤11.4Gb/s, 12UI)		0.02	0.04		ps (rms)	1,2,3
	$t_{jphIF\text{-}UPI}$	IF-UPI, Lo-BW ZDB Mode		0.10	0.13	1	ps (rms)	1,4,5
		IF-UPI, Hi-BW ZDB Mode		0.17	0.20	1	ps (rms)	1,4,5
		IF-UPI, Fanout Mode		0.06	0.07	1	ps (rms)	1,4
	$t_{jphDB2000Q}$	DB2000Q, Fanout Mode		28	39	80	fs (rms)	1,4,5

[1] Applies to all differential outputs, guaranteed by design and characterization. See Test Loads for measurement setup details

[2] Calculated from Intel-supplied Clock Jitter Tool.

[3] For RMS values, additive jitter is calculated by solving for "b" where $b = \sqrt{(c^2 - a^2)}$ and where "a" is rms input jitter and "c" is rms output jitter.

[4] Calculated from phase noise analyzer with Intel-specified brick-wall filter applied. This is an additive jitter specification regardless of buffer operating mode.

[5] The IF-UPI specification is an additive specification, regardless of the buffer operating mode. The enhanced 9ZXL devices meet this specification in all operating modes.

Table 16. Phase Jitter Parameters – 12kHz to 20MHz

Parameter	Symbol	Conditions	Minimum	Typical	Maximum	Specification Limit	Units	Notes
12k–20M Additive Phase Jitter, Fanout Buffer Mode	$t_{jph12k\text{-}20MFOB}$	Fanout Buffer Mode, SSC OFF, 100MHz		98	125	N/A	fs (rms)	1,2,3

[1] Applies to all differential outputs, guaranteed by design and characterization. See Test Loads for measurement setup details

[2] 12kHz to 20MHz brick wall filter.

[3] For RMS values, additive jitter is calculated by solving for "b" where $b = \sqrt{(c^2 - a^2)}$ and where "a" is rms input jitter and "c" is rms output jitter.

Power Management

Table 17. Power Management

CKPWRGD_PD#	DIF_IN	SMBus EN bit	OE[x]# Pin	DIF[x]	PLL State (in ZDB Mode)
0	X	X	X	Low/Low	OFF
1	Running	0	0	Low/Low	ON
		0	1	Low/Low	ON
		1	0	Running	ON
		1	1	Low/Low	ON

Table 18. Frequency Selection (PLL Mode)

100M_133M#	DIF_IN MHz	DIF[x]
1	100.00	DIF_IN
0	133.33	DIF_IN

Note: 9ZXL12x1 and 9ZXL08x1 only. 9ZXL06x1 and 9ZXL0451 are 100MHz only.

Table 19. PLL Operating Mode

HiBW_BypM_LoBW#	Mode	PLL
Low	PLL Lo BW	Running
Mid	Bypass	Off
High	PLL Hi BW	Running

Note: See SMBus Byte 0, bits 7 and 6 for additional information.

Test Loads

Figure 5. Test Load for AC/DC Measurements

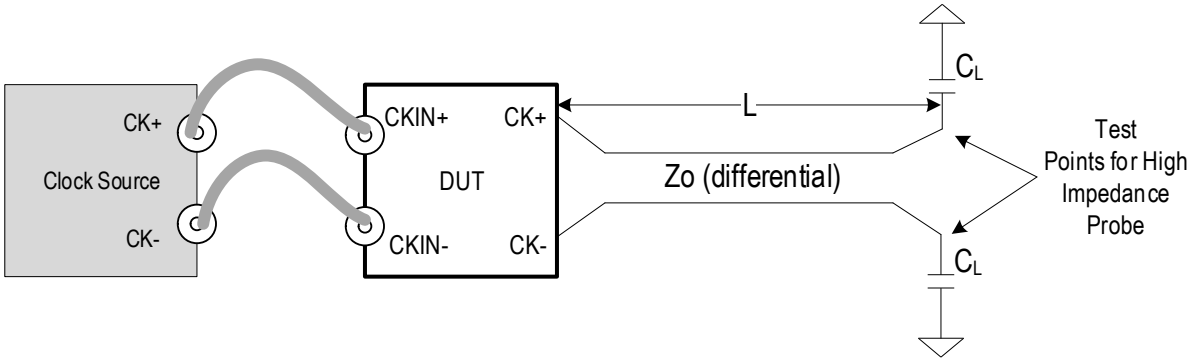

Table 20. Parameters for AC/DC Measurements

Clock Source	Device Under Test (DUT)	Rs (Ω)	Differential Zo (Ω)	L (cm)	C_L (pF)
SMA100B	9ZXLxx3x	27 External	85	25.4	2
SMA100B	9ZXLxx5x	Internal	85	25.4	2

Figure 6. Test Load for Phase Jitter Measurements using Phase Noise Analyzer

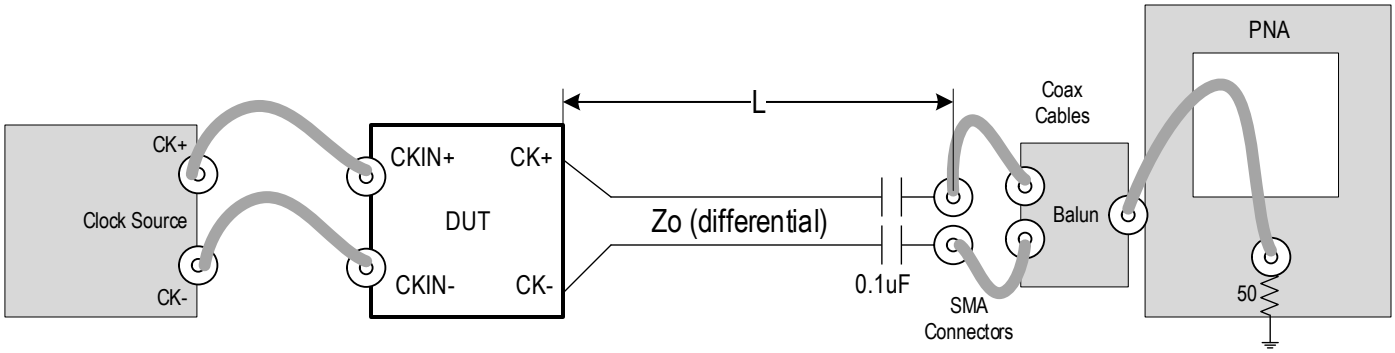

Table 21. Parameters for Phase Jitter Measurements using Phase Noise Analyzer

Clock Source	Device Under Test (DUT)	Rs (Ω)	Differential Zo (Ω)	L (cm)	C_L (pF)	Notes	Parameters Measured
SMA100B	9ZXLxx3x	27 External	85	25.4	N/A	Fanout Mode	PCIe, IF-UPI, DB2000Q
9FGV1006	9ZXLxx3x	27 External	85	25.4	N/A	ZDB Mode	
SMA100B	9ZXLxx5x	Internal	85	25.4	N/A	Fanout Mode	
9FGV1006	9ZXLxx5x	Internal	85	25.4	N/A	ZDB Mode	

Figure 7. Test Load for Phase Jitter Measurements using Oscilloscope

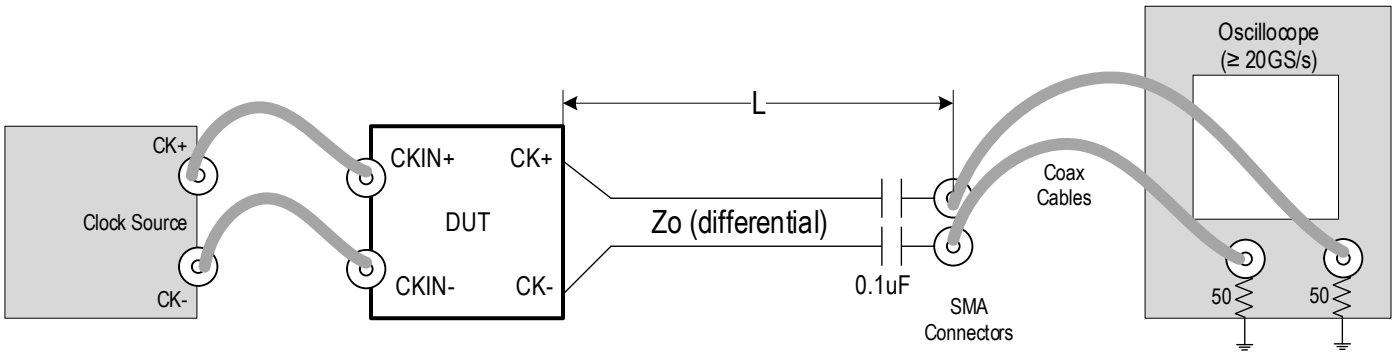

Table 22. Parameters for Phase Jitter Measurements using Oscilloscope

Clock Source	Device Under Test (DUT)	Rs (Ω)	Differential Zo (Ω)	L (cm)	C_L (pF)	Notes	Parameters Measured
SMA100B	9ZXLxx3x	27 External	85	25.4	N/A	Fanout Mode	QPI/UPI
9FGV1006	9ZXLxx3x	27 External	85	25.4	N/A	ZDB Mode	
SMA100B	9ZXLxx5x	Internal	85	25.4	N/A	Fanout Mode	
9FGV1006	9ZXLxx5x	Internal	85	25.4	N/A	ZDB Mode	

General SMBus Serial Interface Information

How to Write

- Controller (host) sends a start bit
- Controller (host) sends the write address
- IDT clock will **acknowledge**
- Controller (host) sends the beginning byte location = N
- IDT clock will **acknowledge**
- Controller (host) sends the byte count = X
- IDT clock will **acknowledge**
- Controller (host) starts sending Byte **N through Byte N+X-1**
- IDT clock will **acknowledg**e each byte **one at a time**
- Controller (host) sends a stop bit

Index Block Write Operation			
Controller (Host)			**IDT (Slave/Receiver)**
T	starT bit		
Slave Address			
WR	WRite		
			ACK
Beginning Byte = N			
			ACK
Data Byte Count = X			
			ACK
Beginning Byte N		X Byte	
			ACK
O			
O			O
O			O
			O
Byte N + X - 1			
			ACK
P	stoP bit		

Note: Address is latched on SADR pin.

How to Read

- Controller (host) will send a start bit
- Controller (host) sends the write address
- IDT clock will **acknowledge**
- Controller (host) sends the beginning byte location = N
- IDT clock will **acknowledge**
- Controller (host) will send a separate start bit
- Controller (host) sends the read address
- IDT clock will **acknowledge**
- IDT clock will send the data byte count = X
- IDT clock sends Byte **N+X-1**
- IDT clock sends **Byte 0 through Byte X (if $X_{(H)}$ was written to Byte 8)**
- Controller (host) will need to acknowledge each byte
- Controller (host) will send a not acknowledge bit
- Controller (host) will send a stop bit

Index Block Read Operation			
Controller (Host)			**IDT (Slave/Receiver)**
T	starT bit		
Slave Address			
WR	WRite		
			ACK
Beginning Byte = N			
			ACK
RT	Repeat starT		
Slave Address			
RD	ReaD		
			ACK
			Data Byte Count = X
ACK			
		X Byte	Beginning Byte N
ACK			
			O
O			O
O			O
O			
			Byte N + X - 1
N	Not acknowledge		
P	stoP bit		

Table 23. SMBus Addresses

Pin		SMBus Address			
SADR1_tri	**SADR0_tri**	**9ZXL12x1**	**9ZXL08x1**	**9ZXL06x1**	**9ZXL04x1**
0	0	D8	D8	D8	D8
0	M	DA	N/A	N/A	DA
0	1	DE	N/A	N/A	DE
M	0	C2	N/A	N/A	N/A
M	M	C4	N/A	N/A	N/A
M	1	C6	N/A	N/A	N/A
1	0	CA	N/A	N/A	N/A
1	M	CC	N/A	N/A	N/A
1	1	CE	N/A	N/A	N/A

Note: 9ZXL08x1 and 9ZXL06x1 do not have SMBus address select pins. Their address is D8.

Table 24. Byte 0: PLL Mode, and Frequency Select Register

Byte 0	Bit7	Bit6	Bit5	Bit4	Bit3	Bit2	Bit1	Bit0
Control Function	PLL Operating Mode Readback 1	PLL Operating Mode Readback 0	Reserved	Reserved	Enable software control of PLL BW	PLL Operating Mode 1	PLL Operating Mode 0	Frequency Select Readback
Type	R	R			RW	RW	RW	R
0	00 = Low BW ZDB Mode	01 = Bypass (Fanout Buffer)			HW Latch	00 = Low BW ZDB Mode	01 = Bypass (Fanout Buffer)	133MHz
1	10 = Reserved	11 = High BW ZDB Mode			SMBus Control	10 = Reserved	11 = High BW ZDB Mode	100MHz
Name	PLL Rdbk[1]	PLL Rdbk[0]			PLL_SW_EN	PLL Mode[1]	PLL Mode[0]	100M_133M#
Default	Latch	Latch	0	0	0	1	1	Latch

Note: Setting bit 3 to '1' allows the user to override the latch value from pin 5 via use of bits 2 and 1. A warm system reset is required if the user changes these bits. Bit 0 defaults to 1 on the 9ZXL0451 and 9ZXL06x1 devices.

Table 25. Byte 1: Output Control Register 1

Byte 1	Bit7	Bit6	Bit5	Bit4	Bit3	Bit2	Bit1	Bit0
Control Function	Output Enable							
Type	RW							
0	Low/Low							
1	OE# Pin Control							
9ZXL12x1 Name	DIF7_en	DIF6_en	DIF5_en	DIF4_en	DIF3_en	DIF2_en	DIF1_en	DIF0_en
9ZXL12x1 Default	1	1	1	1	1	1	1	1
9ZXL08x1 Name	DIF5_en	DIF4_en	DIF3_en	DIF2_en	Reserved	DIF1_en	DIF0_en	Reserved
9ZXL08x1 Default	1	1	1	1	0	1	1	0
9ZXL06x1 Name	Reserved	DIF3_en	DIF2_en	Reserved	Reserved	DIF1_en	DIF0_en	Reserved
9ZXL06x1 Default	0	1	1	0	0	1	1	0
9ZXL0451 Name	Reserved	DIF2_en	DIF1_en	Reserved	Reserved	DIF0_en	Reserved	Reserved
9ZXL0451 Default	0	1	1	0	0	1	0	0

Table 26. Byte 2: Output Control Register 2

Byte 2	Bit7	Bit6	Bit5	Bit4	Bit3	Bit2	Bit1	Bit0
Control Function	Output _enable							
Type	RW							
0	Low/Low							
1	OE# Pin Control							
9ZXL12x1 Name	Reserved	Reserved	Reserved	Reserved	DIF11_en	DIF10_en	DIF9_en	DIF8_en
9ZXL12x1 Default	0	0	0	0	1	1	1	1
9ZXL08x1 Name	Reserved	Reserved	Reserved	Reserved	Reserved	DIF7_en	Reserved	DIF6_en
9ZXL08x1 Default	0	0	0	0	0	1	0	1
9ZXL06x1 Name	Reserved	Reserved	Reserved	Reserved	Reserved	DIF5_en	DIF4_en	Reserved

Table 26. Byte 2: Output Control Register 2 (Cont.)

Byte 2	Bit7	Bit6	Bit5	Bit4	Bit3	Bit2	Bit1	Bit0
9ZXL06x1 Default	0	0	0	0	0	1	1	0
9ZXL0451 Name	Reserved	Reserved	Reserved	Reserved	Reserved	Reserved	DIF3_en	Reserved
9ZXL0451 Default	0	0	0	0	0	0	1	0

Bytes 3 and 4 are Reserved

Table 27. Byte 5: Revision and Vendor ID Register

Byte 5	Bit7	Bit6	Bit5	Bit4	Bit3	Bit2	Bit1	Bit0
Control Function	Revision ID				Vendor ID			
Type	R	R	R	R	R	R	R	R
0	E rev = 0010				0001 = IDT/Renesas			
1								
Name	RID3	RID2	RID1	RID0	VID3	VID2	VID1	VID0
Default	0	1	0	0	0	0	0	1

Table 28. Byte 6: Device ID Register

Byte 6	Bit7	Bit6	Bit5	Bit4	Bit3	Bit2	Bit1	Bit0
Control Function	N/A							
Type	R	R	R	R	R	R	R	R
0	Device ID							
1								
Name	DevID 7	DevID 6	DevID 5	DevID 4	DevID 3	DevID 2	DevID 1	DevID 0
9ZXL1231E	0hE7							
9ZXL1251E	0hF7							
9ZXL0831E	0hE5							
9ZXL0851E	0hF5							
9ZXL0631E	0hE3							
9ZXL0651E	0hF3							
9ZXL0451E	0hF3							

Table 29. Byte 7: Byte Count Register

Byte 7	Bit7	Bit6	Bit5	Bit4	Bit3	Bit2	Bit1	Bit0
Control Function	Reserved	Reserved	Reserved	Writing to this register configures how many bytes will be read back on a block read.				
Type				RW	RW	RW	RW	RW
0				Default value is 8.				
1								
Name				BC4	BC3	BC2	BC1	BC0
Default	0	0	0	0	1	0	0	0

Package Outline Drawings

The package outline drawings are appended at the end of this document and are accessible from the link below. The package information is the most current data available.

9ZXL04x1:
www.idt.com/document/psc/32-vfqfpn-package-outline-drawing-50-x-50-x-090-mm-body-epad-315-x-315-mm-nlg32p1

9ZXL06x1:
www.idt.com/document/psc/ndndg40-package-outline-50-x-50-mm-bodyepad-350mm-sq-040-mm-pitch-qfn

9ZXL08x1:
www.idt.com/document/psc/48-vfqfpn-package-outline-drawing-60-x-60-x-090-mm-body-epad-42-x-42-mm-040mm-pitch-ndg48p2

9ZXL12x1:
www.idt.com/document/psc/64-vfqfpn-package-outline-drawing-90-x-90-x-09-mm-body-05mm-pitch-epad-615-x-615-mm-nlg64p2

Marking Diagrams

9ZXL04x1

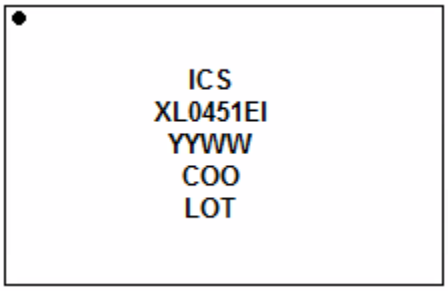

- Lines 1 and 2: truncated part number.
- Line 3: “YYWW” is the last two digits of the year and the work week the part was assembled.
- Line 4: “COO” denotes country of origin.
- Line 5: “LOT” denotes the lot number.

9ZXL06x1

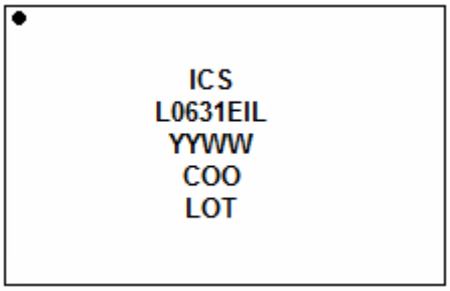

- Lines 1 and 2: truncated part number
- Line 3: “YYWW” is the last two digits of the year and the work week the part was assembled.
- Line 4: “COO” denotes country of origin.
- Line 5: “LOT” denotes the lot number.

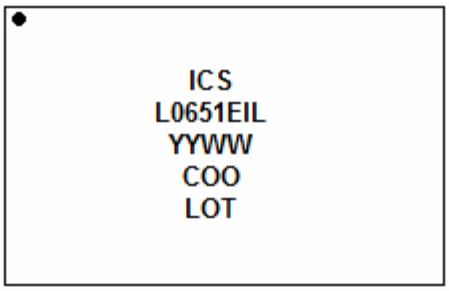

9ZXL08x1 (industrial temperature range)

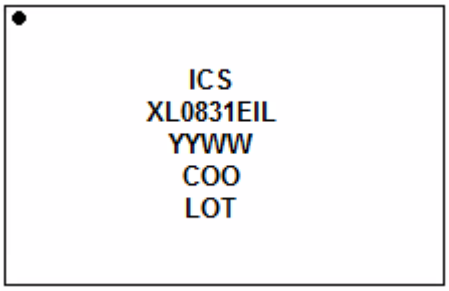

- Lines 1 and 2: truncated part number
- Line 3: “YYWW” is the last two digits of the year and the work week the part was assembled.
- Line 4: “COO” denotes country of origin.
- Line 5: “LOT” denotes the lot number.

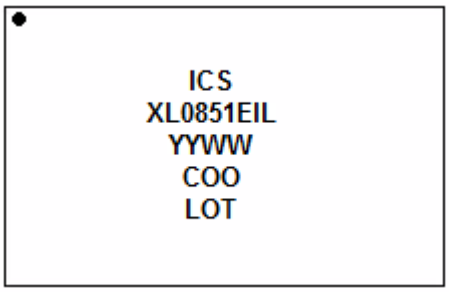

9ZXL08x1 (extended temperature range)

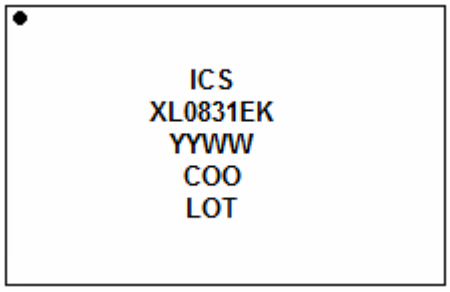

- Lines 1 and 2: truncated part number (“K” denotes -40°C to +105°C)
- Line 3: “YYWW” is the last two digits of the year and the work week the part was assembled.
- Line 4: “COO” denotes country of origin.
- Line 5: “LOT” denotes the lot number.

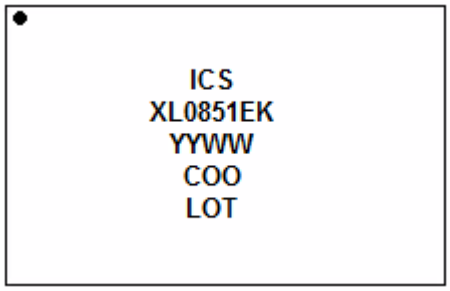

9ZXL12x1

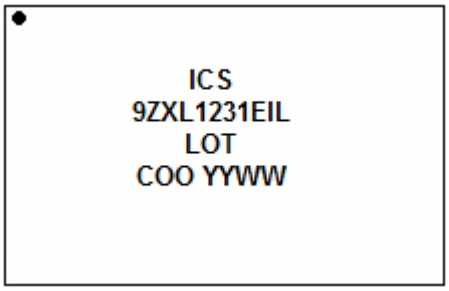

- Lines 1 and 2: truncated part number
- Line 3: “LOT” denotes the lot number.
- Line 4: “COO” denotes country of origin; “YYWW” is the last two digits of the year and the work week the part was assembled.

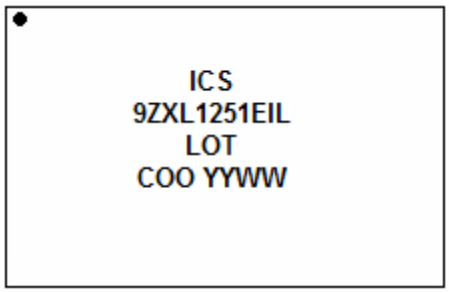

Ordering Information

Table 30. Ordering Information

Number of Clock Outputs	Output Impedance	Orderable Part Number	Temperature	Package	Part Number Suffix and Shipping Method
4	85Ω	9ZXL0451EKILF	-40° to +85°C	5 × 5 mm 32-VFQFPN	None = Trays “T” = Tape and Reel, Pin 1 Orientation: EIA-481C (see Table 31 for more details) “/W” = Tape and Reel, Pin 1 Orientation: EIA-481D (see Table 31 for more details) “-1K/W” = 1K Tape and Reel Quantity, Pin 1 Orientation: EIA-481D
		9ZXL0451EKILFT			
6	33Ω	9ZXL0631EKILF	-40° to +85°C	5 × 5 mm 40-VFQFPN	
		9ZXL0631EKILFT			
	85Ω	9ZXL0651EKILF			
		9ZXL0651EKILFT			
8	33Ω	9ZXL0831EKILF	-40° to +85°C	6 × 6 mm 48-VFQFPN	
		9ZXL0831EKILFT			
		9ZXL0831EKKLF	-40° to +105°C		
		9ZXL0831EKKLFT			
	85Ω	9ZXL0851EKILF	-40° to +85°C		
		9ZXL0851EKILFT			
		9ZXL0851EKKLF	-40° to +105°C		
		9ZXL0851EKKLFT			
12	33Ω	9ZXL1231EKILF	-40° to +85°C	9 × 9 mm 64-VFQFPN	
		9ZXL1231EKILF/W			
		9ZXL1231EKILF-1K/W			
		9ZXL1231EKILFT			
	85Ω	9ZXL1251EKILF			
		9ZXL1251EKILFT			

“E” is the device revision designator (will not correlate with the datasheet revision).

“LF” denotes Pb-free configuration, RoHS compliant; “T” or “/W” is the orderable suffix for Tape and Reel packaging.

Table 31. Pin 1 Orientation in Tape and Reel Packaging

Part Number Suffix	Pin 1 Orientation	Illustration
T	Quadrant 1 (EIA-481-C)	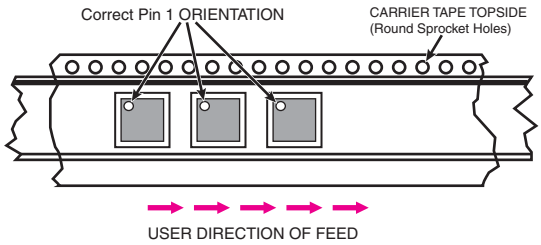
/W	Quadrant 2 (EIA-481-D)	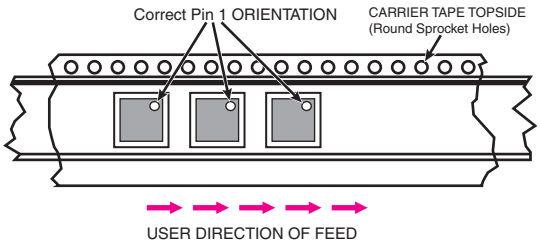

Revision History

Revision Date	Description of Change
February 13, 2020	Updated Byte 1, bit7 and bit5 for 9ZXL0451 default.
January 31, 2020	Typo correction - swapped VMIN and VMAX symbol designators in LP-HCSL Outputs table.
October 22, 2019	Combined 9ZXL04x1E, 9ZXL06x1E, 9ZXL08x1E, and 9ZXL12x1E datasheets into a single document.
April 4, 2019	Last revision date of the 9ZXL0451E datasheet.
November 30, 2018	Last revision date of the 9ZXL0631E_0651E datasheet.
November 30, 2018	Last revision date of the 9ZXL0831E_0851E datasheet.
November 30, 2018	Last revision date of the 9ZXL1231E_1251E datasheet.

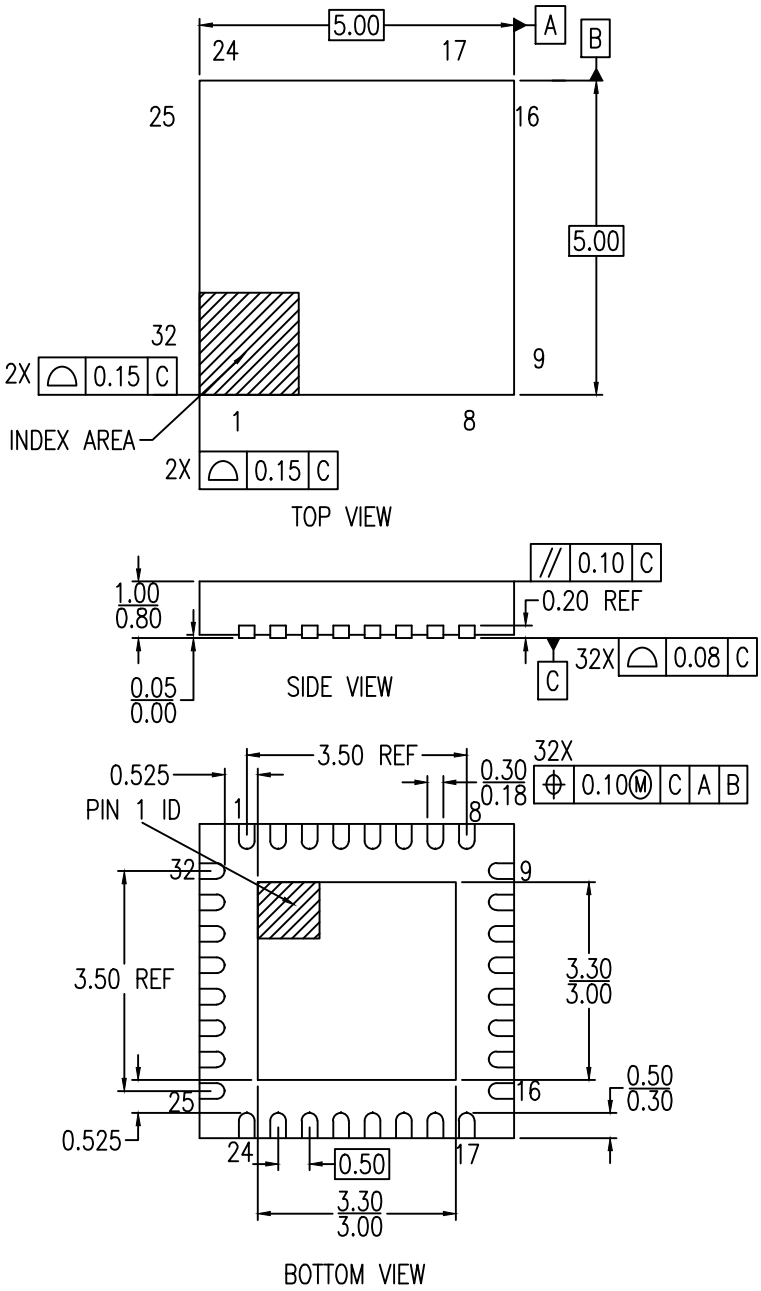

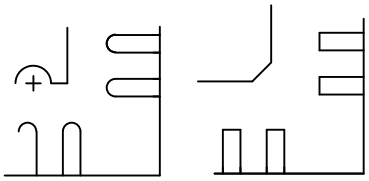

PIN #1 ID OPTION

NOTE:
1. ALL DIMENSION ARE IN MM. ANGLES IN DEGREES.
2. COPLANARITY APPLIE TO THE EXPOSED PAD AS WELL AS THE TERMINALS. COPLANARITY SHALL NOT EXCEED 0.08 MM.
3. WARPAGE SHALL NOT EXCEED 0.10 MM.
4. PIN LOCATION IS UNDENTIFIED BY EITHER CHAMFER OR NOTCH.

© Integrated Device Technology, Inc.

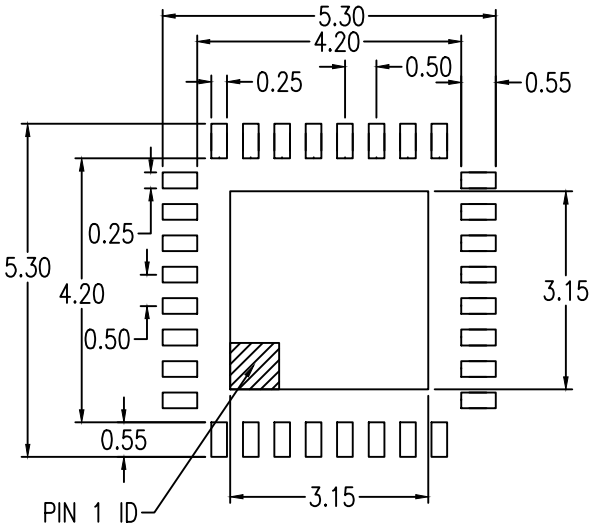

RECOMMENDED LAND PATTERN DIMENSION

1. ALL DIMENSIONS ARE IN MM. ANGLES IN DEGREES.
2. TOP DOWN VIEW. AS VIEWED ON PCB.
3. LAND PATTERN RECOMMENDATION PER IPC-7351B GENERIC REQUIREMENT FOR SURFACE MOUNT DESIGN AND LAND PATTERN.

Package Revision History		
Date Created	Rev No.	Description
April 12, 2018	Rev 02	New Format
Feb 8, 2016	Rev 01	Added "k: Value

© Integrated Device Technology, Inc.

REVISIONS			
REV	DESCRIPTION	DATE	APPROVED
00	INITIAL RELEASE	5/17/16	JH

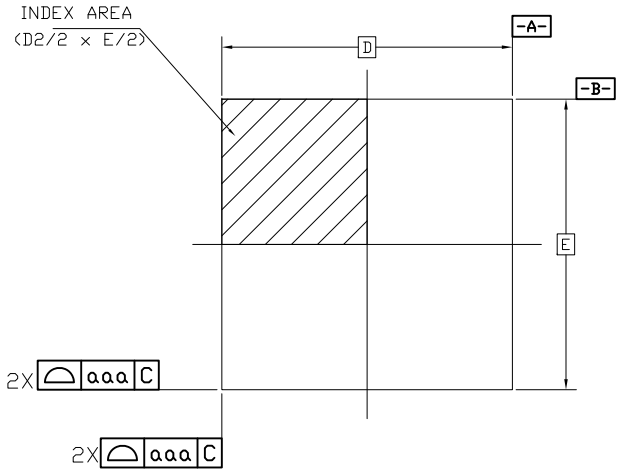

TOP VIEW

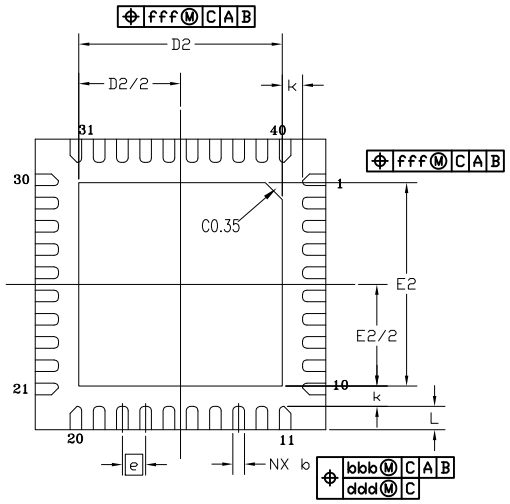

BOTTOM VIEW

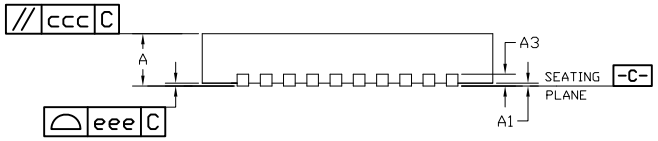

SIDE VIEW

SYMBOL	DIMENSION		
	MIN	NOM	MAX
b	0.15	0.20	0.25
D	5.00 BSC		
E	5.00 BSC		
D2	3.40	3.50	3.60
E2	3.40	3.50	3.60
L	0.30	0.40	0.50
e	0.40 BSC		
N	40		
ND	10 (note 3)		
NE	10 (note 3)		
A	0.80	0.90	1.00
A1	0.00	0.02	0.05
A3	0.2 REF		
k	0.35 REF		
aaa	0.10		
bbb	0.07		
ccc	0.10		
ddd	0.05		
eee	0.08		
fff	0.10		

NOTES:

1. ALL DIMENSIONING AND TOLERANCING CONFORM TO ANSI Y14.5M-1982
2 ALL DIMENSIONS ARE IN MILLIMETERS.
3. ND AND NE REFER TO THE NUMBER OF TERMINALS ON EACH D AND E SIDE RESPECTIVELY.

TOLERANCES UNLESS SPECIFIED
DECIMAL X±.1 XX±.05 XXX± .030
ANGULAR ±1°

IDT™
www.IDT.com
6024 SILVER CREEK VALLEY ROAD. SAN JOSE, CA 95138
PHONE: (408) 284-8200
FAX: (408) 284-3572

APPROVALS	DATE
DRAWN mx	05/31/10
CHECKED	

TITLE ND/NDG40 PACKAGE OUTLINE
5.0 x 5.0 mm BODY,EPAD 3.50mm SQ.
0.40 mm PITCH QFN

SIZE	DRAWING No.	REV
C	PSC-4292-02	00

DO NOT SCALE DRAWING

REVISIONS			
REV	DESCRIPTION	DATE	APPROVED
00	INITIAL RELEASE	5/17/16	JH

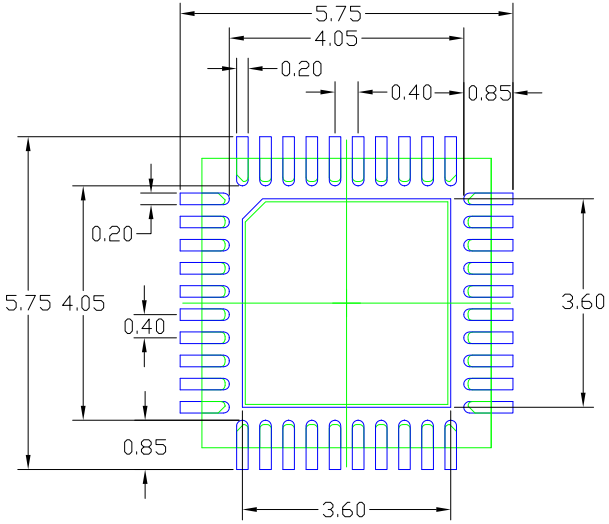

RECOMMENDED LAND PATTERN

NOTES:
1. ALL DIMENSIONS ARE IN mm. ANGLES IN DEGREES.
2. TOP DOWN VIEW AS VIEWED ON PCB.
3. COMPONENT OUTLINE SHOWS FOR REFERENCE IN GREEN.
4. LAND PATTERN IN BLUE. NSMD PATTERN ASSUMED.
5. LAND PATTERN RECOMMENDATION PER IPC-7351B GENERIC REQUIREMENT FOR SURFACE MOUNT DESIGN AND LAND PATTERN.

TOLERANCES UNLESS SPECIFIED DECIMAL X±.1 XX±.05 XXX± .030 ANGULAR ±1°		IDT™ www.IDT.com	6024 SILVER CREEK VALLEY ROAD. SAN JOSE, CA 95138 PHONE: (408) 284-8200 FAX: (408) 284-3572
APPROVALS	DATE	TITLE ND/NDG40 PACKAGE OUTLINE 5.0 x 5.0 mm BODY,EPAD 3.50mm SQ. 0.40 mm PITCH QFN	
DRAWN mx	05/31/10		
CHECKED			
		SIZE C	DRAWING No. PSC-4292-02 / REV 00
		DO NOT SCALE DRAWING	SHEET 2 OF 2

48-VFQFPN Package Outline Drawing

6.0 x 6.0 x 0.90 mm Body, Epad 4.2 x 4.2 mm, 0.40mm Pitch

NDG48P2, PSC-4212-02, Rev 03, Page 1

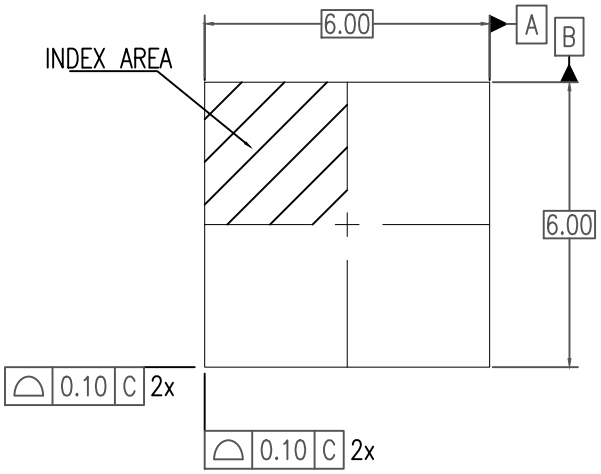

TOP VIEW

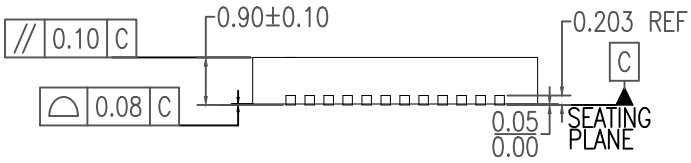

SIDE VIEW

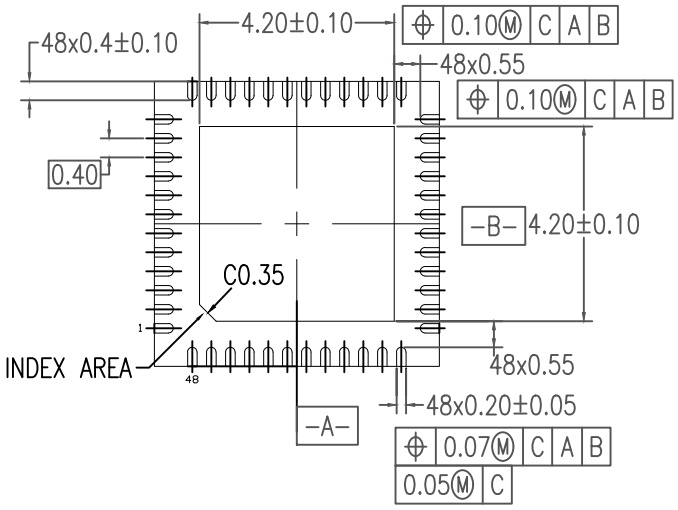

BOTTOM VIEW

NOTES:
1. ALL DIMENSIONING AND TOLERANCING CONFORM TO ANSI Y14.5M-1982
2. ALL DIMENSIONS ARE IN MILLIMETERS.

© Renesas Electronics Corporation

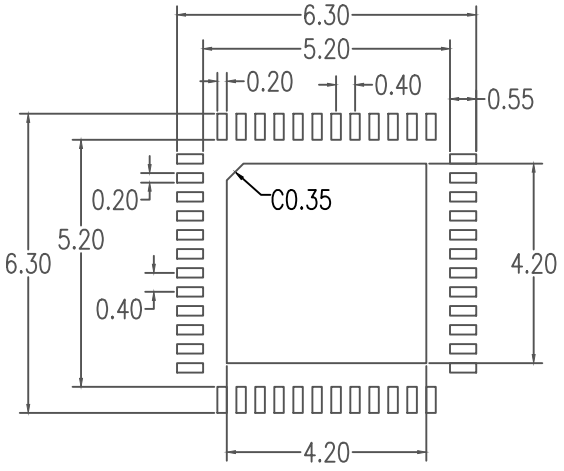

RECOMMENDED LAND PATTERN DIMENSION

NOTES:

1. ALL DIMENSION ARE IN MM. ANGLES IN DEGREES.
2. TOP DOWN VIEW. AS VIEWED ON PCB.
3. LAND PATTERN RECOMMENDATION PER IPC-7351B GENERIC REQUIREMENT FOR SURFACE MOUNT DESIGN AND LAND PATTERN.

Package Revision History		
Date Created	Rev No.	Description
July 24, 2018	Rev 02	New Format Change QFN to VFQFPN, Recalculate Land Pattern
Feb 25, 2020	Rev 03	Tolerance Format Change

© Renesas Electronics Corporation

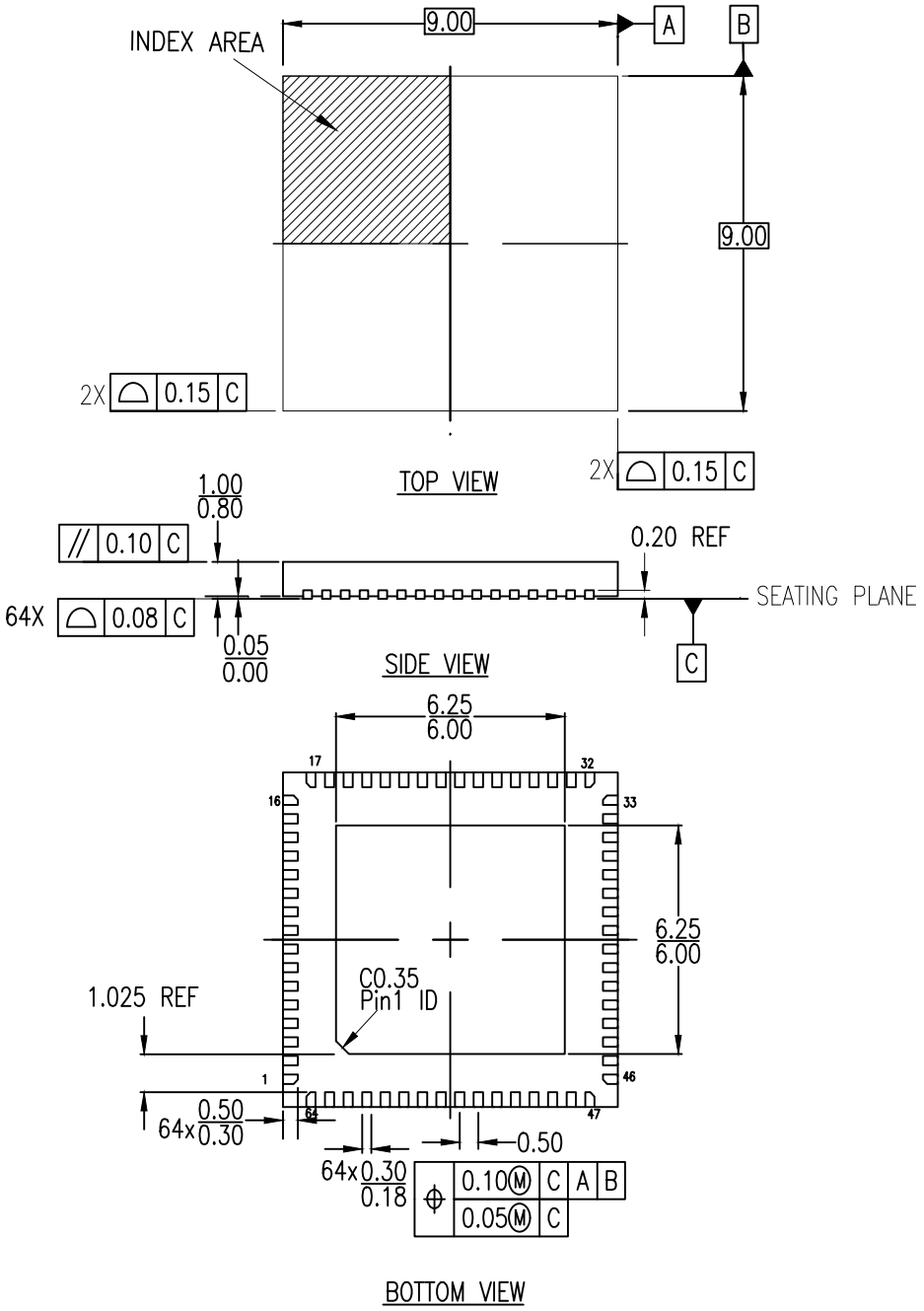

NOTES:
1. ALL DIMENSIONING AND TOLERANCEING CONFORM TO ANSI Y14.5M-1982
2. ALL DIMENSONS ARE IN MILLIMETERS

© Renesas Electronics Corporation

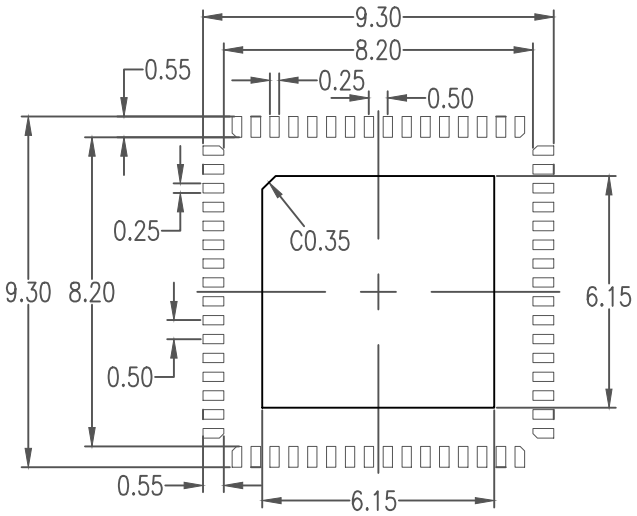

RECOMMENDED LAND PATTERN DIMENSION

NOTES:
1. ALL DIMENSIONING AND TOLERANCING CONFORM TO ANSI Y14.5M-1982
2. ALL DIMENSONS ARE IN MILLIMETERS
3. LAND PATTERN RECOMMENDATION PER IPC-7351B GENERIC REQUIREMENT FOR SURFACE MOUNT DESIGN AND LAND PATTERN

Package Revision History		
Date Created	Rev No.	Description
Feb 21, 2018	Rev 01	New Format, Change QFN to VFQFPN, Added P2
Nov 3, 2015	Rev 00	Initial Release

© Renesas Electronics Corporation

IMPORTANT NOTICE AND DISCLAIMER

RENESAS ELECTRONICS CORPORATION AND ITS SUBSIDIARIES (“RENESAS”) PROVIDES TECHNICAL SPECIFICATIONS AND RELIABILITY DATA (INCLUDING DATASHEETS), DESIGN RESOURCES (INCLUDING REFERENCE DESIGNS), APPLICATION OR OTHER DESIGN ADVICE, WEB TOOLS, SAFETY INFORMATION, AND OTHER RESOURCES “AS IS” AND WITH ALL FAULTS, AND DISCLAIMS ALL WARRANTIES, EXPRESS OR IMPLIED, INCLUDING, WITHOUT LIMITATION, ANY IMPLIED WARRANTIES OF MERCHANTABILITY, FITNESS FOR A PARTICULAR PURPOSE, OR NON-INFRINGEMENT OF THIRD PARTY INTELLECTUAL PROPERTY RIGHTS.

These resources are intended for developers skilled in the art designing with Renesas products. You are solely responsible for (1) selecting the appropriate products for your application, (2) designing, validating, and testing your application, and (3) ensuring your application meets applicable standards, and any other safety, security, or other requirements. These resources are subject to change without notice. Renesas grants you permission to use these resources only for development of an application that uses Renesas products. Other reproduction or use of these resources is strictly prohibited. No license is granted to any other Renesas intellectual property or to any third party intellectual property. Renesas disclaims responsibility for, and you will fully indemnify Renesas and its representatives against, any claims, damages, costs, losses, or liabilities arising out of your use of these resources. Renesas' products are provided only subject to Renesas' Terms and Conditions of Sale or other applicable terms agreed to in writing. No use of any Renesas resources expands or otherwise alters any applicable warranties or warranty disclaimers for these products.

(Rev.1.0 Mar 2020)

Corporate Headquarters

TOYOSU FORESIA, 3-2-24 Toyosu,
Koto-ku, Tokyo 135-0061, Japan
www.renesas.com

Contact Information

For further information on a product, technology, the most up-to-date version of a document, or your nearest sales office, please visit:
www.renesas.com/contact/

Trademarks

Renesas and the Renesas logo are trademarks of Renesas Electronics Corporation. All trademarks and registered trademarks are the property of their respective owners.

© 2020 Renesas Electronics Corporation. All rights reserved.