Description

The 5PB11xx is a high-performance LVCMOS clock buffer family of devices. It has an additive phase jitter of 50fs RMS.

There are five different fan-out variations available: 1:2 to 1:10.

The 5PB11xx supports a synchronous glitch-free output enable (OE) function to eliminate any potential intermediate incorrect output clock cycles when enabling or disabling outputs. It can operate from a 1.8V to 3.3V supply.

The 5PB1104 is also available in an Automotive Grade 1, AEC-Q100 qualified version.

Typical Applications

- Industrial applications
- Automotive applications

Features

- High-performance 1:2, 1:4, 1:6, 1:8, 1:10 LVCMOS clock buffer
- Very low pin-to-pin skew: < 50ps
- Very low additive jitter: < 50fs
- Supply voltage: 1.8V to 3.3V
- 3.3V tolerant input clock
- f_{MAX} = 200MHz
- Integrated serial termination for 50Ω channel
- Packaged in 8-, 14-, 16-, 20-pin TSSOP and as small as 2 × 2 mm DFN and VFQFPN packages
- Industrial (-40°C to +85°C) and extended (-40°C to +105°C) temperature ranges
- 5PB1104 available in AEC-Q100 qualified, Automotive Grade 1 (-40°C to +125°C)

Block Diagram

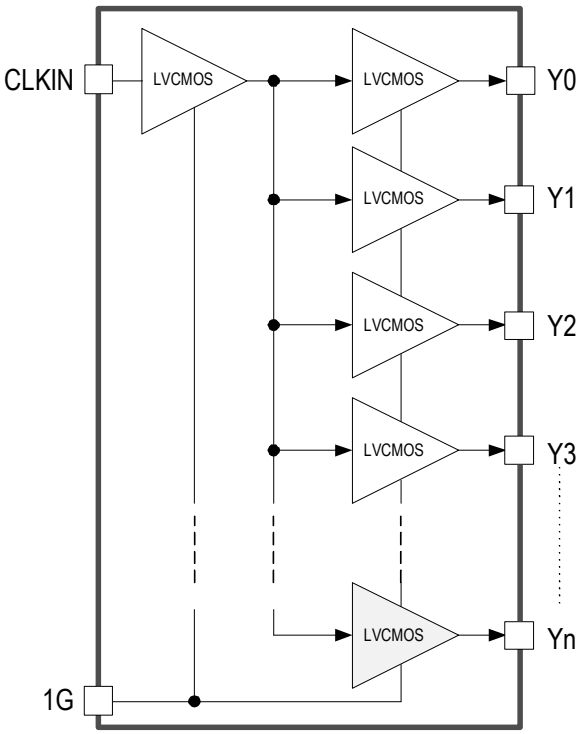

Contents

Description . . . 1
Typical Applications . . . 1
Features . . . 1
Block Diagram . . . 1
Pin Assignments – TSSOP Packages . . . 3
Pin Descriptions – TSSOP Packages . . . 3
Pin Assignments – DFN/VFQFPN Packages . . . 4
Pin Descriptions – DFN/VFQFPN Packages . . . 4
Output Logic Table . . . 5
Absolute Maximum Ratings . . . 5
Recommended Operating Conditions . . . 5
Thermal Characteristics . . . 6
DC Electrical Characteristics . . . 7
AC Electrical Characteristics . . . 10
Phase Noise Plots . . . 13
Test Load and Circuit . . . 14
Package Outline Drawings . . . 14
Marking Diagrams (Industrial) . . . 14
Marking Diagrams (Extended) . . . 15
Marking Diagrams (Automotive) . . . 15
Ordering Information (Industrial) . . . 16
Ordering Information (Extended) . . . 17
Ordering Information (Automotive) . . . 17
Revision History . . . 18

Pin Assignments – TSSOP Packages

Figure 1. Pin Assignments for TSSOP Packages

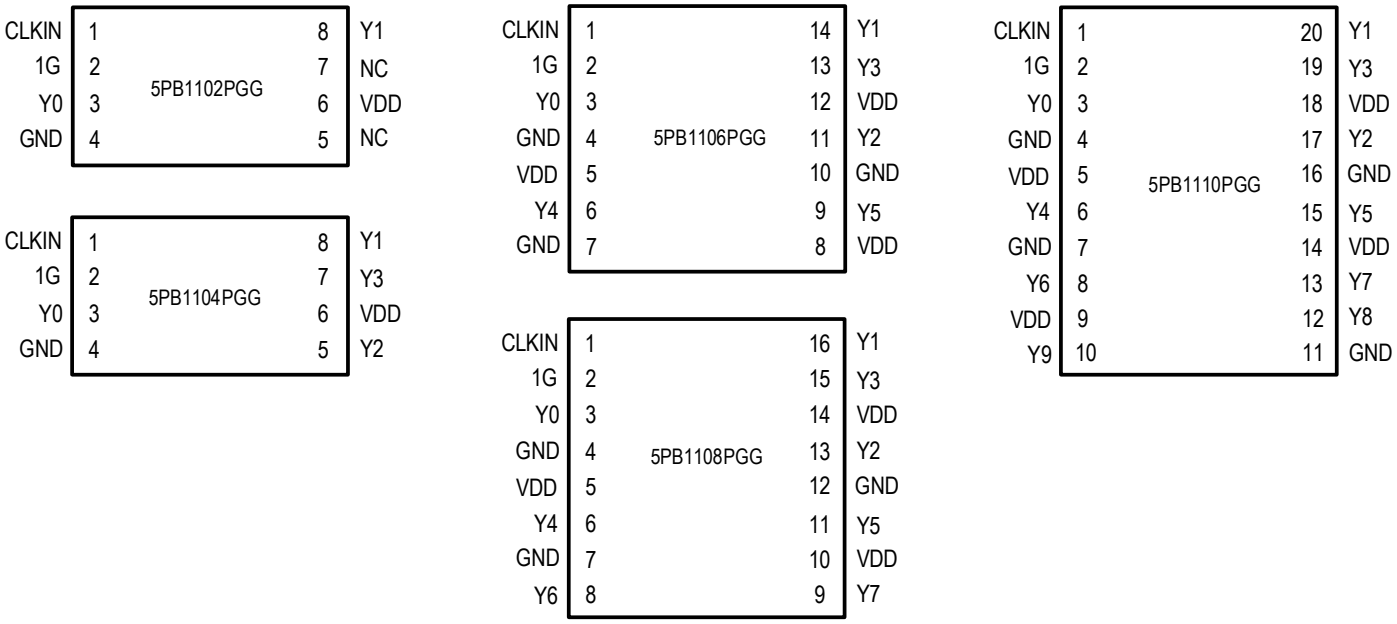

Pin Descriptions – TSSOP Packages

Table 1. Pin Descriptions for TSSOP Packages

Device Number	LVCMOS Clock Input	Clock Output Enable	LVCMOS Clock Output	Supply Voltage	Ground
	CLKIN	1G	Y0, Y1, ... Y9	V_{DD}	GND
5PB1102PGG	1	2	3, 8	6	4
5PB1104PGG	1	2	3, 8, 5, 7	6	4
5PB1106PGG	1	2	3, 14, 11, 13, 6, 9	5, 8, 12	4, 7, 10
5PB1108PGG	1	2	3, 16, 13, 15, 6, 11, 8, 9	5, 10, 14	4, 7, 12
5PB1110PGG	1	2	3, 20, 17, 19, 6, 15, 8, 13, 12, 10	5, 9, 14, 18	4, 7, 11, 16

Pin Assignments – DFN/VFQFPN Packages

Figure 2. Pin Assignments for DFN/QFN Packages

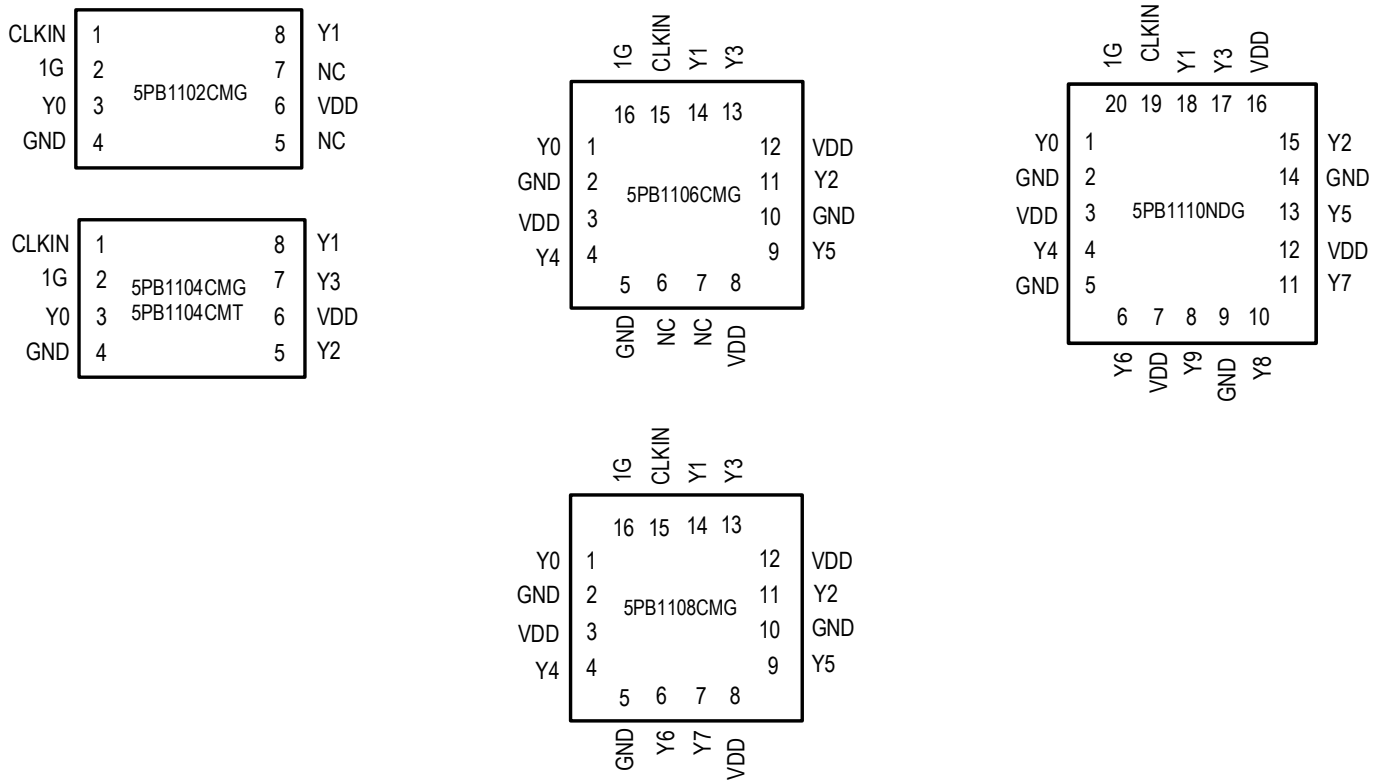

Pin Descriptions – DFN/VFQFPN Packages

Table 2. Pin Descriptions for DFN/VFQFPN Packages

Device Number	LVCMOS Clock Input	Clock Output Enable	LVCMOS Clock Output	Supply Voltage	Ground
	CLKIN	1G	Y0, Y1, ... Y9	V_{DD}	GND
5PB1102CMG	1	2	3, 8	6	4
5PB1104CMG 5PB1104CMT	1	2	3, 8, 5, 7	6	4
5PB1106CMG	15	16	1, 14, 11, 13, 4, 9	3, 8, 12	2, 5, 10
5PB1108CMG	15	16	1, 14, 11, 13, 4, 9, 6, 7	3, 8, 12	2, 5, 10
5PB1110NDG	19	20	1, 18, 15, 17, 4, 13, 6, 11, 10, 8	3, 7, 12, 16	2, 5, 9, 14

Output Logic Table

Inputs		Output
CLKIN	1G	Yn
X	L	L
L	H	L
H	H	H

After at least three cycles of input clock toggling. Output Enable function is asynchronous to eliminate any intermediate incorrect output clock cycles during transition which may cause frequency peaking to the downstream device.

Absolute Maximum Ratings

The absolute maximum ratings are stress ratings only. Stresses greater than those listed below can cause permanent damage to the device. Functional operation of the 5PB11xx at absolute maximum ratings is not implied. Exposure to absolute maximum rating conditions may affect device reliability.

Table 3. Absolute Maximum Ratings

Item	Rating
Supply Voltage, V_{DD}	3.8V
Output Enable and All Outputs	-0.4 V to V_{DD} + 0.5 V
Input Voltage, CLKIN	-0.4 V to 3.465V
Ambient Operating Temperature (Industrial)	-40 to +85°C
Ambient Operating Temperature (Extended)	-40 to +105°C
Ambient Operating Temperature (Automotive Grade 1)	-40 to +125°C
Storage Temperature	-65 to +150°C
Junction Temperature	125°C
Soldering Temperature	260°C

Recommended Operating Conditions

Table 4. Recommended Operating Conditions

Parameter	Minimum	Typical	Maximum	Units
Ambient Operating Temperature (Industrial)	-40		+85	
Ambient Operating Temperature (Extended)	-40		+105	
Ambient Operating Temperature (Automotive Grade 1)	-40		+125	°C
Power Supply Voltage (measured in respect to GND)	+1.71		+3.465	V

Thermal Characteristics

Table 5. Thermal Characteristics

Package	Applies to	Θ_{JA}	Θ_{JC}	Θ_{JB}	Units
8-TSSOP	5PB1102PGG, 5PB1104PGG	122.0	58.2	139.3	°C/W; still air
14-TSSOP	5PB1106PGG	84.5	44.2	64.5	°C/W; still air
16-TSSOP	5PB1108PGG	80.9	43.3	60.1	°C/W; still air
20-TSSOP	5PB1110PGG	72.5	37.9	49.8	°C/W; still air
8-DFN	5PB1102CMG, 5PB1104CMG, 5PB1104CMT	120.2	99.4	63.3	°C/W; still air
16-VFQFPN	5PB1106CMG, 5PB1108CMG	115.6	83.1	61.8	°C/W; still air
20-VFQFPN	5PB1110NDG	49.6	94.7	5.1	°C/W; still air

DC Electrical Characteristics

V_{DD} = 1.8V, 2.5V, or 3.3V (see tables below)

Table 6. DC Electrical Characteristics – V_{DD} = 1.8V ±5%

Symbol	Parameter	Applies to	Conditions	Minimum	Typical	Maximum	Units
V_{DD}	Operating Voltage	All devices		1.71	1.8	1.89	V
V_{IH}	Input High Voltage, CLKIN [1]	All devices		0.7 × V_{DD}			V
V_{IL}	Input Low Voltage, CLKIN [1]	All devices				0.3 × V_{DD}	V
V_{IH}	Input High Voltage, 1G	All devices		1.6		V_{DD}	V
V_{IL}	Input Low Voltage, 1G	All devices				0.6	V
V_{OH}	Output High Voltage	Industrial and Extended [2]	I_{OH} = -5mA.	1.4			V
	Output High Voltage	Automotive [3]	I_{OH} = -5mA.	1.2			V
V_{OL}	Output Low Voltage	Industrial and Extended [2]	I_{OL} = 5mA.			0.4	V
	Output Low Voltage	Automotive [3]	I_{OL} = 5mA.			0.45	V
Z_O	Nominal Output Impedance	All devices			50		Ω
C_{IN}	Input Capacitance	All devices	CLKIN, 1G pin.		5		pF
I_{DD}	Operating Supply Current, 5PB1102	Industrial and Extended [2]	100MHz, no load, 25°C.		6	8	mA
	Operating Supply Current, 5PB1104				12	13	
	Operating Supply Current, 5PB1106				15	18	
	Operating Supply Current, 5PB1108				20	23	
	Operating Supply Current, 5PB1110				23	27	
I_{DD}	Operating Supply Current	Automotive [3]	0.001MHz, C_L = 5pF.		0.7	1	mA
			0.008MHz, C_L = 5pF.		0.7	1	
			40MHz, C_L = 5pF.		11	13	
			100MHz, C_L = 5pF.		25	30	
			156.25MHz, C_L = 5pF.		37	47	
			200MHz, C_L = 5pF.		39	57	
I_{IH}	Input High Leakage	All devices	V_{IN} = V_{DD}			5	µA
I_{IL}	Input Low Leakage	All devices	V_{IN} = 0V			5	µA

[1] Nominal switching threshold is V_{DD}/2.

[2] 5PB11xxPGGI, 5PB11xxPGGK, 5PB11xxCMGI, 5PB11xxCMGK. T_A = -40°C to +105°C unless stated otherwise.

[3] 5PB1104CMG1 and 5PB1104CMT1 only. T_A = -40°C to +125°C unless stated otherwise.

Table 7. DC Electrical Characteristics – V_{DD} = 2.5V ±5%

Symbol	Parameter	Applies to	Conditions	Minimum	Typical	Maximum	Units
V_{DD}	Operating Voltage	All devices		2.375	2.5	2.625	V
V_{IH}	Input High Voltage, CLKIN [1]	All devices		0.7 × V_{DD}			V
V_{IL}	Input Low Voltage, CLKIN [1]	All devices				0.3 × V_{DD}	V
V_{IH}	Input High Voltage, 1G	All devices		1.8		V_{DD}	V
V_{IL}	Input Low Voltage, 1G	All devices				0.7	V
V_{OH}	Output High Voltage	Industrial and Extended [2]	I_{OH} = -8mA.	1.9			V
	Output High Voltage	Automotive [3]	I_{OH} = -8mA.	1.6			V
V_{OL}	Output Low Voltage	Industrial and Extended [2]	I_{OL} = 8mA.			0.5	V
	Output Low Voltage	Automotive [3]	I_{OL} = 8mA.			0.625	V
Z_O	Nominal Output Impedance	All devices			50		Ω
C_{IN}	Input Capacitance	All devices	CLKIN, 1G pin.		5		pF
I_{DD}	Operating Supply Current, 5PB1102	Industrial and Extended [2]	100MHz, no load, 25°C.		9	11	mA
	Operating Supply Current, 5PB1104				15	18	
	Operating Supply Current, 5PB1106				21	24	
	Operating Supply Current, 5PB1108				27	31	
	Operating Supply Current, 5PB1110				32	37	
I_{DD}	Operating Supply Current	Automotive [3]	0.001MHz, C_L = 5pF.		0.9	1.3	mA
			0.008MHz, C_L = 5pF.		0.9	1.3	
			40MHz, C_L = 5pF.		15	17	
			100MHz, C_L = 5pF.		35	42	
			156.25MHz, C_L = 5pF.		52	67	
			200MHz, C_L = 5pF.		56	80	
I_{IH}	Input High Leakage	All devices	V_{IN} = V_{DD}			5	µA
I_{IL}	Input Low Leakage	All devices	V_{IN} = 0V			5	µA

[1] Nominal switching threshold is V_{DD}/2.

[2] 5PB11xxPGGI, 5PB11xxPGGK, 5PB11xxCMGI, 5PB11xxCMGK. T_A = -40°C to +105°C unless stated otherwise.

[3] 5PB1104CMG1 and 5PB1104CMT1 only. T_A = -40°C to +125°C unless stated otherwise.

Table 8. DC Electrical Characteristics – V_{DD} = 3.3V ±5%

Symbol	Parameter	Applies to	Conditions	Minimum	Typical	Maximum	Units
V_{DD}	Operating Voltage	All devices		3.135	3.3	3.465	V
V_{IH}	Input High Voltage, CLKIN [1]	All devices		0.7 × V_{DD}			V
V_{IL}	Input Low Voltage, CLKIN [1]	All devices				0.3 × V_{DD}	V
V_{IH}	Input High Voltage, 1G	Industrial and Extended [2]		2.0		V_{DD}	V
V_{IH}	Input High Voltage, 1G	Automotive [3]		2.1		V_{DD}	V
V_{IL}	Input Low Voltage, 1G	All devices				0.8	V
V_{OH}	Output High Voltage	Industrial and Extended [2]	I_{OH} = -12mA.	2.4			V
	Output High Voltage	Automotive [3]	I_{OH} = -12mA.	2.1			V
V_{OL}	Output Low Voltage	Industrial and Extended [2]	I_{OL} = 12mA.			0.7	V
	Output Low Voltage	Automotive [3]	I_{OL} = 12mA.			0.825	V
Z_O	Nominal Output Impedance	All devices			50		Ω
C_{IN}	Input Capacitance	All devices	CLKIN, 1G pin.		5		pF
I_{DD}	Operating Supply Current, 5PB1102	Industrial and Extended [2]	100MHz, no load, 25°C.		12	13	mA
	Operating Supply Current, 5PB1104				20	22	
	Operating Supply Current, 5PB1106				25	30	
	Operating Supply Current, 5PB1108				35	38	
	Operating Supply Current, 5PB1110				40	45	
I_{DD}	Operating Supply Current	Automotive [3]	0.001MHz, C_L = 5pF.		1.2	1.7	mA
			0.008MHz, C_L = 5pF.		1.2	1.7	
			40MHz, C_L = 5pF.		19	22	
			100MHz, C_L = 5pF.		45	54	
			156.25MHz, C_L = 5pF.		67	87	
			200MHz, C_L = 5pF.		75	107	
I_{IH}	Input High Leakage	All devices	V_{IN} = V_{DD}			5	µA
I_{IL}	Input Low Leakage	All devices	V_{IN} = 0V			5	µA

[1] Nominal switching threshold is V_{DD}/2.

[2] 5PB11xxPGGI, 5PB11xxPGGK, 5PB11xxCMGI, 5PB11xxCMGK. T_A = -40°C to +105°C unless stated otherwise.

[3] 5PB1104CMG1 and 5PB1104CMT1 only. T_A = -40°C to +125°C unless stated otherwise.

AC Electrical Characteristics

V_{DD} = 1.8V, 2.5V, or 3.3V (see tables below).

Table 9. AC Electrical Characteristics – V_{DD} = 1.8V ±5%

Symbol	Parameter	Applies to	Conditions	Minimum	Typical	Maximum	Units
	Input Frequency	All devices		0		200	MHz
t_{OR}	Output Rise Time (2pF load)	Industrial and Extended [1]	0.36V to 1.44V, C_L = 2pF.		0.5	0.75	ns
t_{OF}	Output Fall Time (2pF load)	Industrial and Extended [1]	1.44V to 0.36V, C_L = 2pF.		0.5	0.75	ns
t_{OR}	Output Rise Time (5pF load)	Industrial and Extended [1]	0.36V to 1.44V, C_L = 5pF.		0.8	1.0	ns
t_{OF}	Output Fall Time (5pF load)	Industrial and Extended [1]	1.44V to 0.36V, C_L = 5pF.		0.8	1.0	ns
t_{OR}	Output Rise Time (5pF load)	Automotive [2]	0.36V to 1.44V, C_L = 5pF.		0.65	1.2	ns
t_{OF}	Output Fall Time (5pF load)	Automotive [2]	1.44V to 0.36V, C_L = 5pF.		0.65	1.2	ns
$t_{START-UP}$	Start-up Time	All devices	Part start-up time for valid outputs after V_{DD} ramp-up.			3	ms
t_{PD}	Propagation Delay [3]	Industrial and Extended [1]		1.5		2.5	ns
		Automotive [2]		1.0		3.4	ns
	Buffer Additive Phase Jitter, RMS	Industrial and Extended [1]	156.25MHz, Integration Range: 12kHz–20MHz.			0.05	ps
		Automotive [2]	156.25MHz, Integration Range: 12kHz–20MHz.			0.06	ps
	Output to Output Skew, 5PB1102/04	Industrial and Extended [1]	Rising edges at V_{DD}/2. [4]		35	50	ps
	Output to Output Skew, 5PB1106	Industrial and Extended [1]	Rising edges at V_{DD}/2. [4]		35	58	ps
	Output to Output Skew, 5PB1108/10	Industrial and Extended [1]	Rising edges at V_{DD}/2. [4]		45	65	ps
	Output to Output Skew	Automotive [2]	Rising edges at V_{DD}/2. [4]		35	87	ps
	Device to Device Skew	All devices	Rising edges at V_{DD}/2.			200	ps
t_{EN}	Output Enable Time	All devices	$C_L \leq$ 5pF.			3	cycles
t_{DIS}	Output Disable Time	All devices	$C_L \leq$ 5pF.			3	cycles
t_{DC}	Duty Cycle [5]	All devices			50		%

[1] 5PB11xxPGGI, 5PB11xxPGGK, 5PB11xxCMGI, 5PB11xxCMGK. T_A = -40°C to +105°C unless stated otherwise.

[2] 5PB1104CMG1 and 5PB1104CMT1 only. T_A = -40°C to +125°C unless stated otherwise.

[3] With rail-to-rail input clock.

[4] Between any 2 outputs with equal loading.

[5] Duty cycle on outputs will match incoming clock duty cycle when VIH on CLKIN pin equals VDD power supply voltage. Consult Renesas for tight duty cycle clock generators.

Table 10. AC Electrical Characteristics – V_{DD} = 2.5V ±5%

Symbol	Parameter	Applies to	Conditions	Minimum	Typical	Maximum	Units
	Input Frequency	All devices		0		200	MHz
t_{OR}	Output Rise Time (2pF load)	Industrial and Extended [1]	0.5V to 2.0V, C_L = 2pF.		0.4	0.7	ns
t_{OF}	Output Fall Time (2pF load)	Industrial and Extended [1]	2.0V to 0.5V, C_L = 2pF.		0.4	0.7	ns
t_{OR}	Output Rise Time (5pF load)	Industrial and Extended [1]	0.5V to 2.0V, C_L = 5pF.		0.75	1.0	ns
t_{OF}	Output Fall Time (5pF load)	Industrial and Extended [1]	2.0V to 0.5V, C_L = 5pF.		0.75	1.0	ns
t_{OR}	Output Rise Time (5pF load)	Automotive [2]	0.5V to 2.0V, C_L = 5pF.		0.63	1.2	ns
t_{OF}	Output Fall Time (5pF load)	Automotive [2]	2.0V to 0.5V, C_L = 5pF.		0.63	1.2	ns
$t_{START-UP}$	Start-up Time	All devices	Part start-up time for valid outputs after V_{DD} ramp-up.			3	ms
t_{PD}	Propagation Delay, 5PB1102/04[3]	Industrial and Extended [1]		1.9		2.9	ns
	Propagation Delay, 5PB1106/08[3]	Industrial and Extended [1]		2.0		3.3	ns
	Propagation Delay, 5PB1110 [3]	Industrial and Extended [1]		2.0		3.0	ns
	Propagation Delay [3]	Automotive [2]		1.0		4.5	ns
	Buffer Additive Phase Jitter, RMS	Industrial and Extended [1]	156.25MHz, Integration Range: 12kHz–20MHz.			0.05	ps
		Automotive [2]	156.25MHz, Integration Range: 12kHz–20MHz.			0.06	ps
	Output to Output Skew, 5PB1102/04	Industrial and Extended [1]	Rising edges at V_{DD}/2. [4]		35	50	ps
	Output to Output Skew, 5PB1106	Industrial and Extended [1]	Rising edges at V_{DD}/2. [4]		35	58	ps
	Output to Output Skew, 5PB1108/10	Industrial and Extended [1]	Rising edges at V_{DD}/2. [4]		45	65	ps
	Output to Output Skew	Automotive [2]	Rising edges at V_{DD}/2. [4]		35	87	ps
	Device to Device Skew	All devices	Rising edges at V_{DD}/2.			200	ps
t_{EN}	Output Enable Time	All devices	$C_L \leq$ 5pF.			3	cycles
t_{DIS}	Output Disable Time	All devices	$C_L \leq$ 5pF.			3	cycles
t_{DC}	Duty Cycle [5]	All devices			50		%

[1] 5PB11xxPGGI, 5PB11xxPGGK, 5PB11xxCMGI, 5PB11xxCMGK. T_A = -40°C to +105°C unless stated otherwise.

[2] 5PB1104CMG1 and 5PB1104CMT1 only. T_A = -40°C to +125°C unless stated otherwise.

[3] With rail-to-rail input clock.

[4] Between any 2 outputs with equal loading.

[5] Duty cycle on outputs will match incoming clock duty cycle when VIH on CLKIN pin equals VDD power supply voltage. Consult Renesas for tight duty cycle clock generators.

Table 11. AC Electrical Characteristics – V_{DD} = 3.3V ±5%

Symbol	Parameter	Applies to	Conditions	Minimum	Typical	Maximum	Units
	Input Frequency	All devices		0		200	MHz
t_{OR}	Output Rise Time (2pF load)	Industrial and Extended [1]	0.66V to 2.64V, C_L = 2pF.		0.45	0.6	ns
t_{OF}	Output Fall Time (2pF load)	Industrial and Extended [1]	2.64V to 0.66V, C_L = 2pF.		0.45	0.6	ns
t_{OR}	Output Rise Time (5pF load)	Industrial and Extended [1]	0.66V to 2.64V, C_L = 5pF.		0.7	1.0	ns
t_{OF}	Output Fall Time (5pF load)	Industrial and Extended [1]	2.64V to 0.66V, C_L = 5pF.		0.7	1.0	ns
t_{OR}	Output Rise Time (5pF load)	Automotive [2]	0.66V to 2.64V, C_L = 5pF.		0.61	1.2	ns
t_{OF}	Output Fall Time (5pF load)	Automotive [2]	2.64V to 0.66V, C_L = 5pF.		0.61	1.2	ns
$t_{START-UP}$	Start-up Time	All devices	Part start-up time for valid outputs after V_{DD} ramp-up.			3	ms
t_{PD}	Propagation Delay, 5PB1102/04[3]	Industrial and Extended [1]		1.7		2.4	ns
	Propagation Delay, 5PB1106/08[3]	Industrial and Extended [1]		1.7		2.7	ns
	Propagation Delay, 5PB1110 [3]	Industrial and Extended [1]		1.7		2.5	ns
	Propagation Delay [3]	Automotive [2]		1.0		3.4	ns
	Buffer Additive Phase Jitter, RMS	All devices	156.25MHz, Integration Range: 12kHz–20MHz.			0.05	ps
	Output to Output Skew, 5PB1102/04	Industrial and Extended [1]	Rising edges at V_{DD}/2. [4]		35	50	ps
	Output to Output Skew, 5PB1106	Industrial and Extended [1]	Rising edges at V_{DD}/2. [4]		35	58	ps
	Output to Output Skew, 5PB1108/10	Industrial and Extended [1]	Rising edges at V_{DD}/2. [4]		45	65	ps
	Output to Output Skew	Automotive [2]	Rising edges at V_{DD}/2. [4]		35	87	ps
	Device to Device Skew	All devices	Rising edges at V_{DD}/2.			200	ps
t_{EN}	Output Enable Time	All devices	$C_L \leq$ 5pF.			3	cycles
t_{DIS}	Output Disable Time	All devices	$C_L \leq$ 5pF.			3	cycles
t_{DC}	Duty Cycle [5]	All devices			50		%

[1] 5PB11xxPGGI, 5PB11xxPGGK, 5PB11xxCMGI, 5PB11xxCMGK. T_A = -40°C to +105°C unless stated otherwise.

[2] 5PB1104CMG1 and 5PB1104CMT1 only. T_A = -40°C to +125°C unless stated otherwise.

[3] With rail-to-rail input clock.

[4] Between any 2 outputs with equal loading.

[5] Duty cycle on outputs will match incoming clock duty cycle when VIH on CLKIN pin equals VDD power supply voltage. Consult Renesas for tight duty cycle clock generators.

Phase Noise Plots

The phase noise plots show the low additive jitter of the 5PB11xx high-performance buffer. With an integration range of 12kHz to 20MHz, the reference input has about 58.9fs of RMS phase jitter while the output of 5PB11xx has about 70.9fs of RMS phase jitter. This results in a low additive phase jitter of only 39fs.

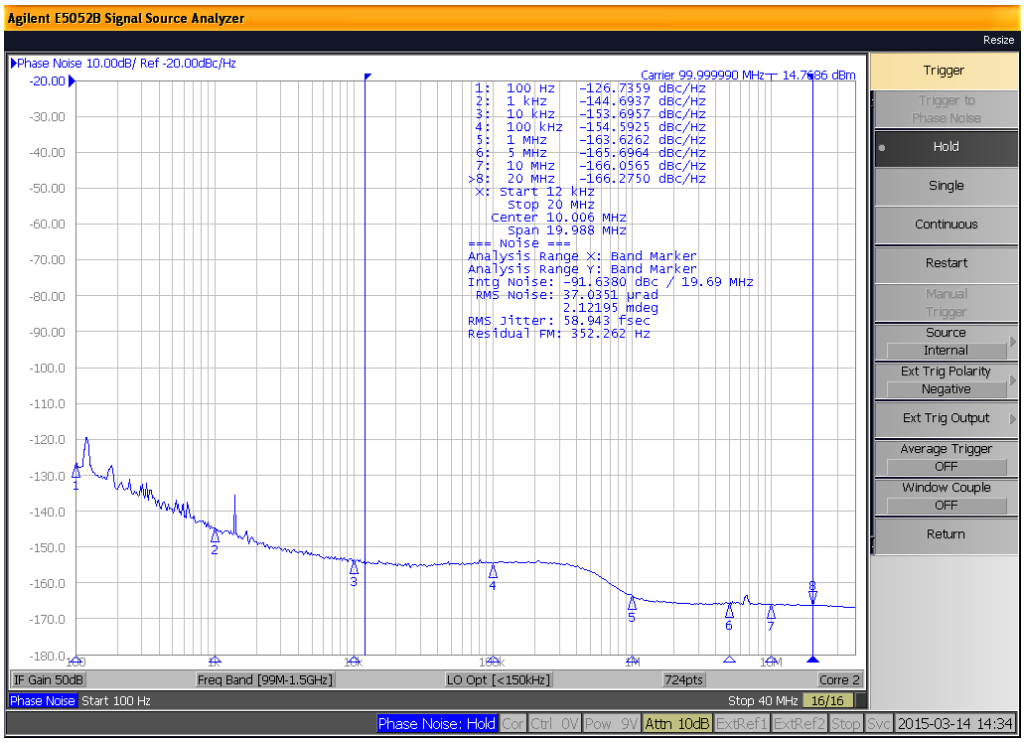

Reference Phase Noise 58.9fs (12kHz to 20MHz)

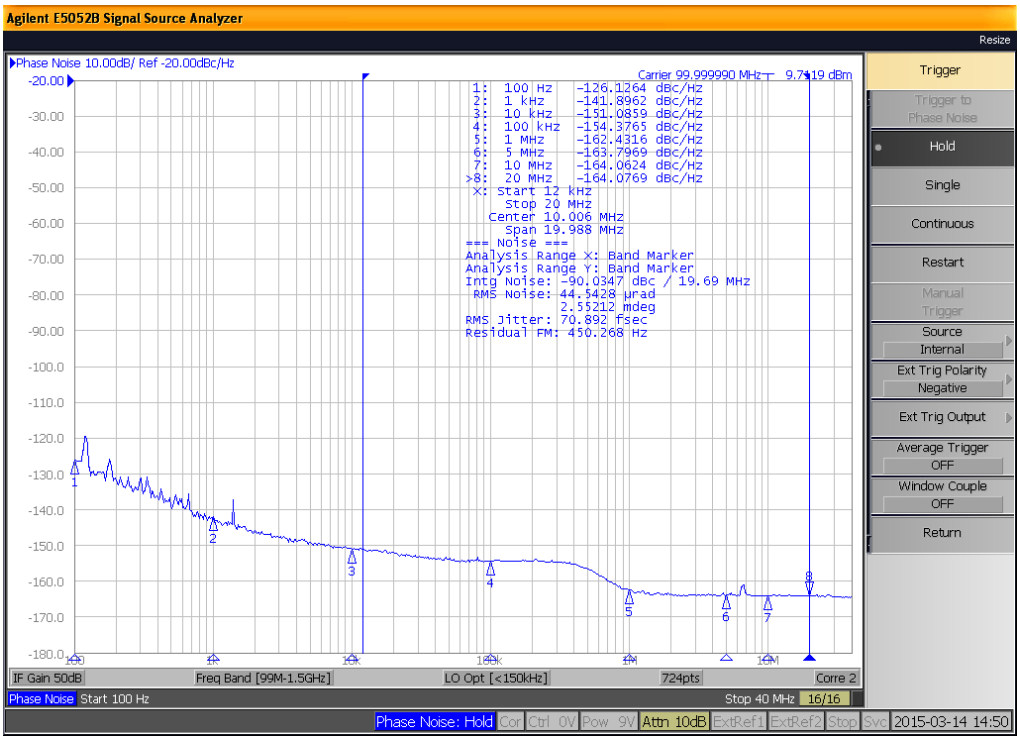

Output Phase Noise 70.9fs (12kHz to 20MHz)

Test Load and Circuit

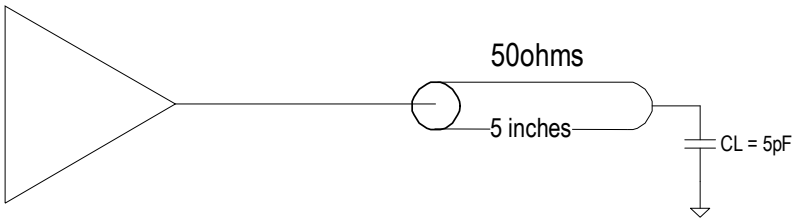

Package Outline Drawings

The package outline drawings (PGG8D1, PGG14T1, PGG16T1, PGG20D1, CMG8, CMG16, NDG20P2, CMT8D1) are appended at the end of this document.

Marking Diagrams (Industrial)

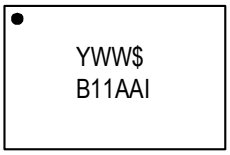

8-pin TSSOP

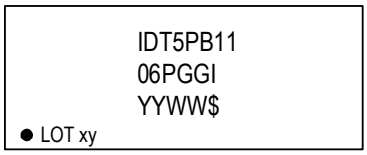

14-pin TSSOP

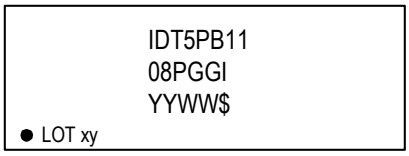

16-pin TSSOP

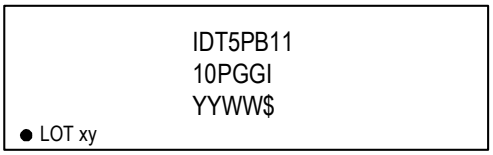

20-pin TSSOP

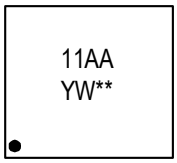

8-pin DFN

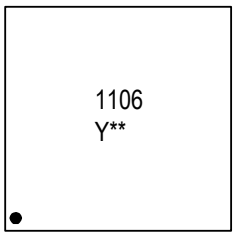

16-pin VFQFPN

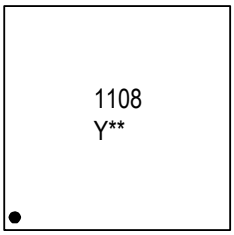

16-pin VFQFPN

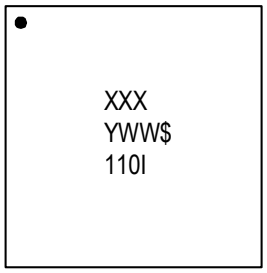

20-pin VFQFPN

- “AA” denotes the last two digits of the part number for 8-TSSOP and DFN (e.g. 02, 04).
- “**” is the lot sequence.
- “XXX” denotes the last three characters of the Asm lot (20-VFQFPN only).
- “YYWW”, “YWW”, “YW”, or “Y” is the last digit(s) of the year and work week that the part was assembled.
- “$” denotes the mark code.
- “G” after the two-letter package code denotes RoHS compliant package.
- “I” denotes industrial temperature range device.

Marking Diagrams (Extended)

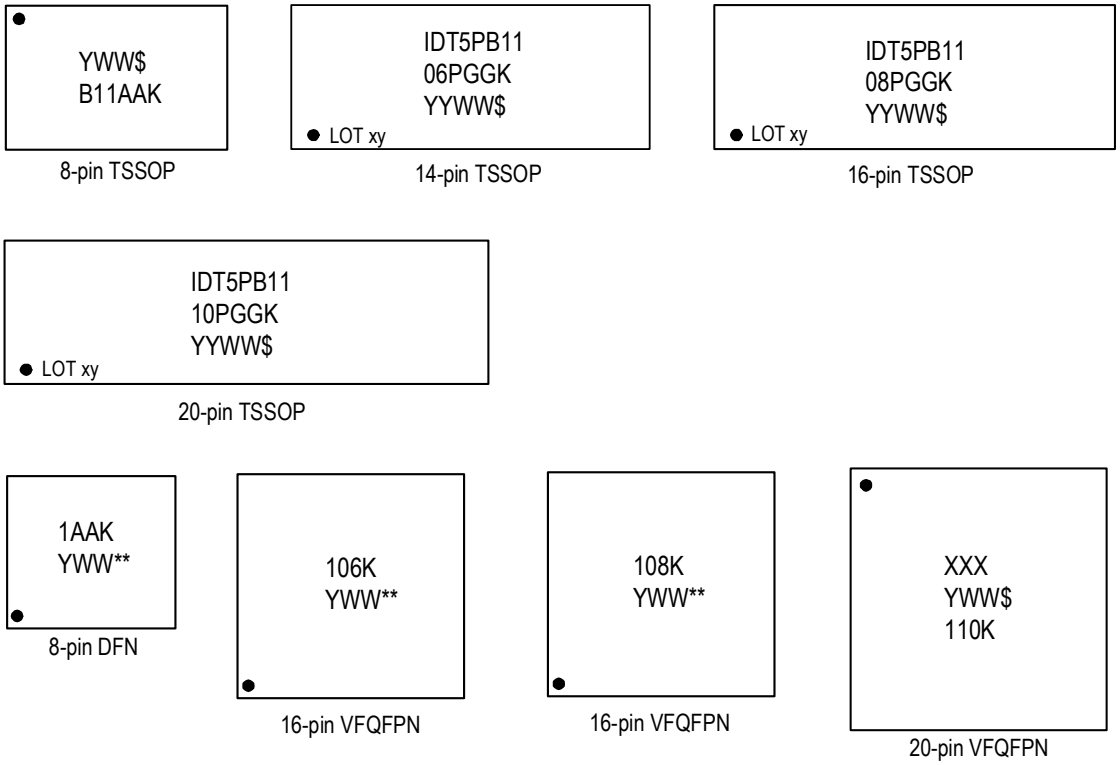

- "AA" denotes the last two digits of the part number for 8-TSSOP and DFN (e.g. 02, 04).
- "**" is the lot sequence.
- "XXX" denotes the last three characters of the Asm lot (20-VFQFPN only).
- "YYWW", "YWW", "YW", or "Y" is the last digit(s) of the year and week that the part was assembled.
- "$" denotes the mark code.
- "G" after the two-letter package code denotes RoHS compliant package.
- "K" denotes extended temperature range device.

Marking Diagrams (Automotive)

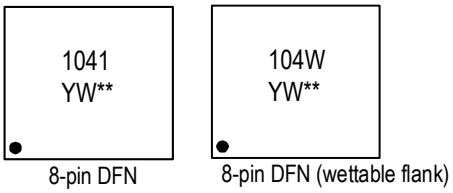

- Line 1: truncated part number; last number is the temperature grade: 1 = Automotive Grade 1.
- "YW" is the last digit of the year and work week that the part was assembled.
- "**" denotes the lot sequence number.

Ordering Information (Industrial)

Orderable Part Number	Package	Carrier Type	Temperature
5PB1102PGGI	4.4mm body, 8-TSSOP	Tubes	-40 to +85°C
5PB1102PGGI8		Tape and Reel	
5PB1104PGGI		Tubes	
5PB1104PGGI8		Tape and Reel	
5PB1106PGGI	4.4mm body, 14-TSSOP	Tubes	
5PB1106PGGI8		Tape and Reel	
5PB1108PGGI	4.4mm body, 16-TSSOP	Tubes	
5PB1108PGGI8		Tape and Reel	
5PB1110PGGI	4.4mm body, 20-TSSOP	Tubes	
5PB1110PGGI8		Tape and Reel	
5PB1102CMGI	2.0 × 2.0 × 0.5 mm, 8-DFN	Cut Tape	
5PB1102CMGI8		Tape and Reel	
5PB1104CMGI		Cut Tape	
5PB1104CMGI8		Tape and Reel	
5PB1104CMGI/W*		Tape and Reel	
5PB1106CMGI	2.5 × 2.5 × 0.5 mm,16-VFQFPN	Cut Tape	
5PB1106CMGI8		Tape and Reel	
5PB1108CMGI		Cut Tape	
5PB1108CMGI8		Tape and Reel	
5PB1110NDGI	3.0 × 3.0 × 0.90 mm, 20-VFQFPN	Tubes	
5PB1110NDGI8		Tape and Reel	

* "/W" stands for tape and reel with pin 1 orientation: EIA-481-D. All other tape and reels options come with EIA-481-C pin 1 orientation.

Ordering Information (Extended)

Orderable Part Number	Package	Carrier Type	Temperature
5PB1102PGGK	4.4mm body, 8-TSSOP	Tubes	-40 to +105°C
5PB1102PGGK8		Tape and Reel	
5PB1104PGGK		Tubes	
5PB1104PGGK8		Tape and Reel	
5PB1106PGGK	4.4mm body, 14-TSSOP	Tubes	
5PB1106PGGK8		Tape and Reel	
5PB1108PGGK	4.4mm body, 16-TSSOP	Tubes	
5PB1108PGGK8		Tape and Reel	
5PB1110PGGK	4.4mm body, 20-TSSOP	Tubes	
5PB1110PGGK8		Tape and Reel	
5PB1102CMGK	2.0 × 2.0 × 0.5 mm, 8-DFN	Cut Tape	
5PB1102CMGK8		Tape and Reel	
5PB1104CMGK		Cut Tape	
5PB1104CMGK8		Tape and Reel	
5PB1104CMGK/W*		Tape and Reel	
5PB1106CMGK	2.5 × 2.5 × 0.5 mm,16-VFQFPN	Cut Tape	
5PB1106CMGK8		Tape and Reel	
5PB1108CMGK		Cut Tape	
5PB1108CMGK8		Tape and Reel	
5PB1110NDGK	3.0 × 3.0 × 0.90 mm, 20-VFQFPN	Tubes	
5PB1110NDGK8		Tape and Reel	

"G" after the two-letter package code denotes Pb-Free configuration, RoHS compliant.

* "/W" stands for tape and reel with pin 1 orientation: EIA-481-D. All other tape and reels options come with EIA-481-C pin 1 orientation.

Ordering Information (Automotive)

Orderable Part Number	Package	Carrier Type	Temperature
5PB1104CMG1	2.0 × 2.0 × 0.5 mm, 8-DFN	Cut Tape	-40° to +125°C
5PB1104CMG18		Tape and Reel	
5PB1104CMT1	2.0 × 2.0 × 0.5 mm, 8-DFN, Wettable flank	Cut Tape	-40° to +125°C
5PB1104CMT18		Tape and Reel	

Revision History

Revision Date	Description of Change
January 5, 2021	Updated Supply Voltage pin numbers for 5PB1110PGG in TSSOP Pin Descriptions table.
December 2, 2020	▪ Added 5PB1104CMG/W option to the ordering information (Extended) table. ▪ Updated Package Outline Drawings links.
September 29, 2020	Updated marking diagrams for 5PB1106/08/10PGGI and 5PB1106/08/10PGGK.
January 31, 2020	Rebranded the document as Renesas. No technical changes were made.
December 4, 2019	Added Input High and Low Leakage parameters to Table 6, Table 7, and Table 8
May 31, 2019	▪ Added 5PB1104CMT1 wettable flank package information. ▪ Updated Propagation Delay values for automotive.
December 18, 2018	▪ Updated t_{PD} and skew values. ▪ Added 5PB1104CMG1 automotive part information.
October 24, 2018	Initial release.

8-TSSOP Package Outline Drawing

4.4 mm Body 0.65mm Pitch

PGG8D1, PSC-4768-01, Rev 00, Page 1

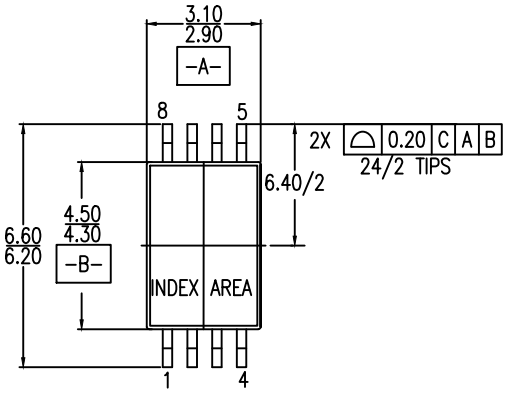

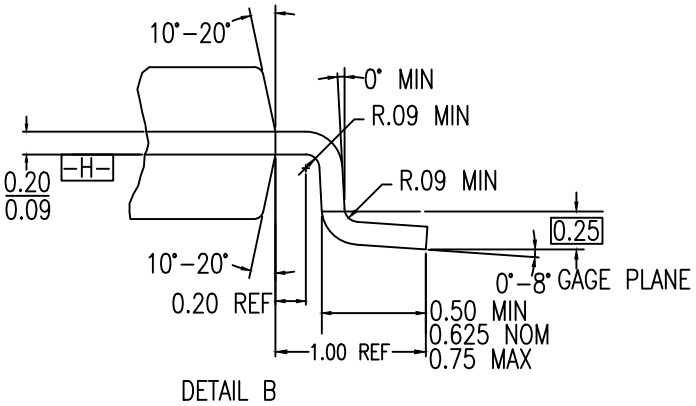

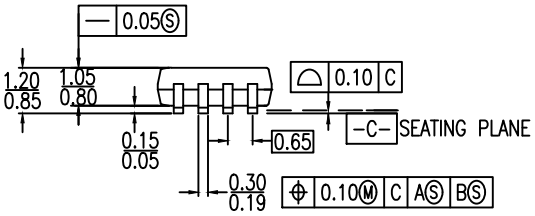

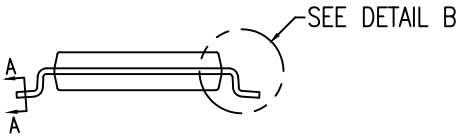

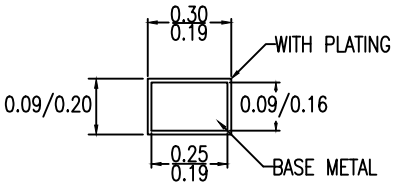

SECTION A-A

NOTES:

1. ALL DIMENSIONING AND TOLERANCING CONFORM TO ANSI Y14.5M-1982
2. ALL DIMENSION ARE IN MM.

© Renesas Electronics Corporation

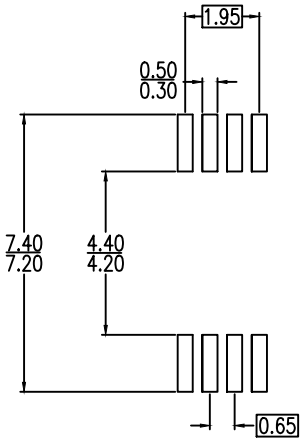

RECOMMENDED LAND PATTERN DIMENSIONS

NOTES:

1. ALL DIMENSIONS ARE IN MILLIMETERS

Package Revision History		
Date Created	Rev No.	Description
July 27, 2018	Rev 00	Initial Release

© Renesas Electronics Corporation

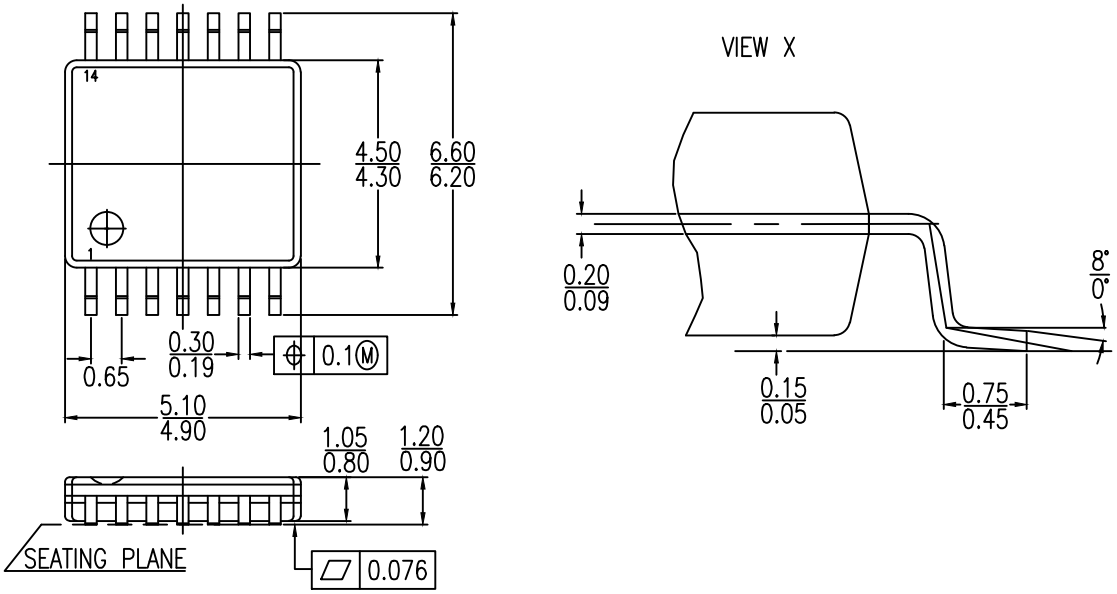

NOTE:
1. ALL DIMENSIONS ARE IN MILLIMETERS

© Renesas Electronics Corporation

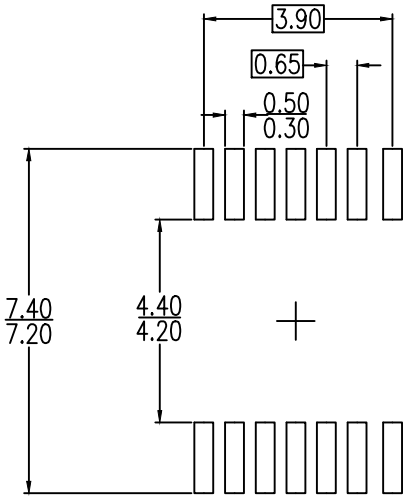

LAND PATTERN DIMENSIONS

NOTE:
1. ALL DIMENSIONS ARE IN MILLIMETERS

Package Revision History		
Date Created	Rev No.	Description
Mar, 10 2017	Rev 01	Added Land Pattern
Dec, 19 2017	Rev 02	New Format

© Renesas Electronics Corporation

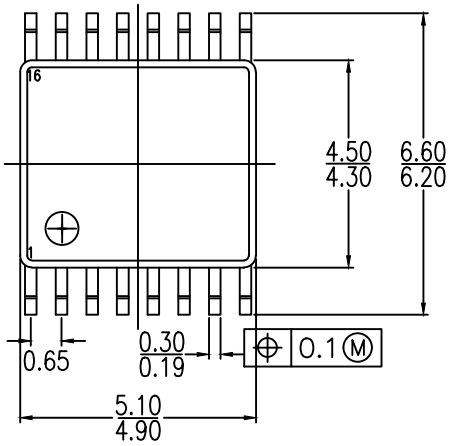

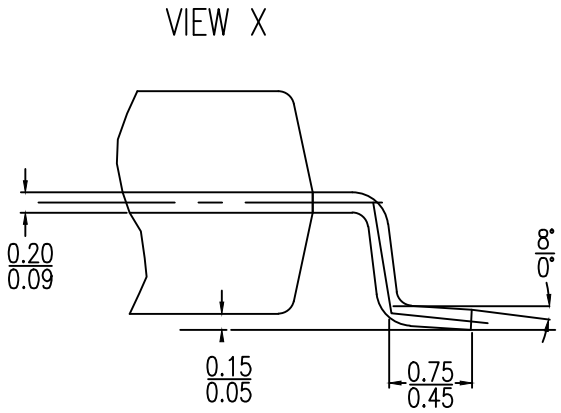

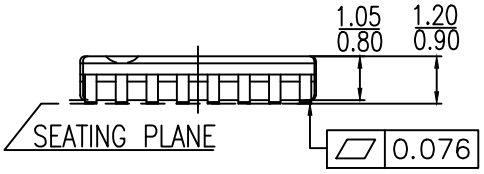

NOTE:
1. ALL DIMENSIONS ARE IN MILLIMETERS

© Renesas Electronics Corporation

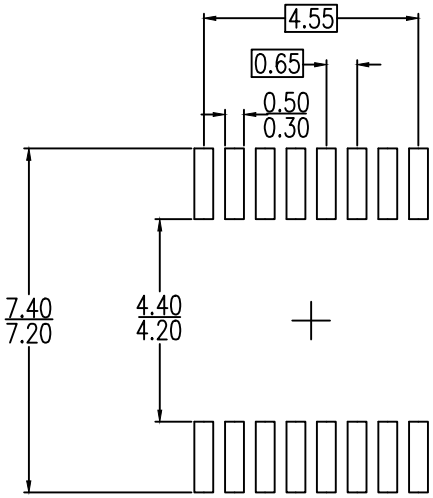

LAND PATTERN DIMENSIONS

NOTE:
1. ALL DIMENSIONS ARE IN MILLIMETERS

Package Revision History		
Date Created	Rev No.	Description
Jan 26, 2018	Rev 00	Revised from PSC-4056-02 PGG16

© Renesas Electronics Corporation

20-TSSOP Package Outline Drawing

4.4 mm Body 0.65mm Pitch

PGG20D1, PSC-4770-01, Rev 00, Page 1

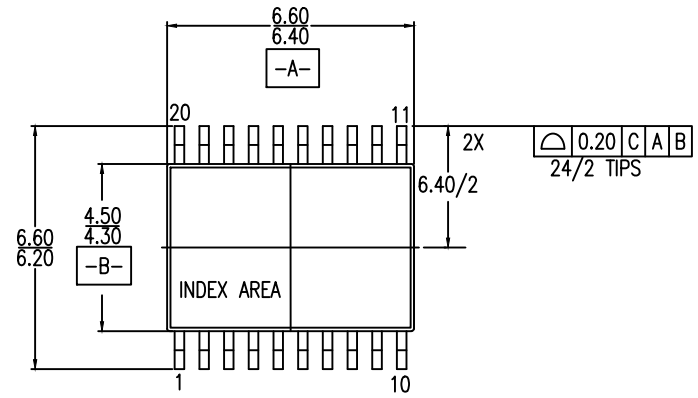

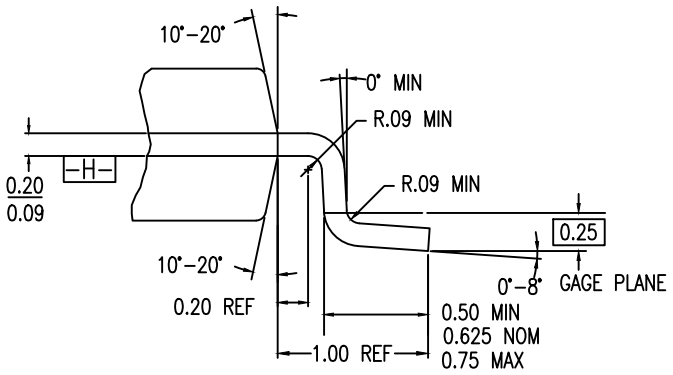

DETAIL B

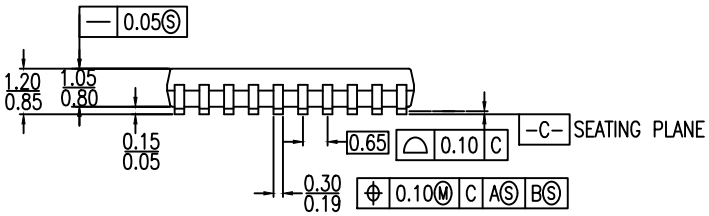

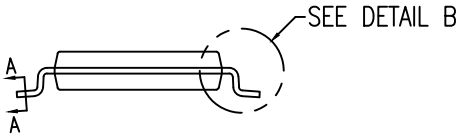

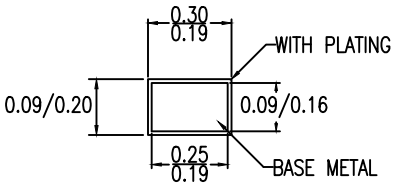

SECTION A-A

NOTES:

1. ALL DIMENSIONING AND TOLERANCING CONFORM TO ANSI Y14.5M-1982
2. ALL DIMENSION ARE IN MM.

© Renesas Electronics Corporation

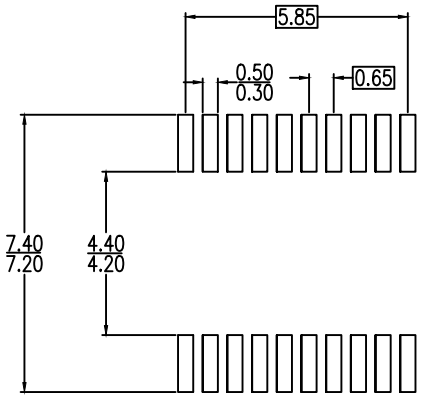

RECOMMENDED LAND PATTERN DIMENSIONS

NOTES:

1. ALL DIMENSIONS ARE IN MILLIMETERS

Package Revision History		
Date Created	Rev No.	Description
July 24, 2018	Rev 00	Initial Release

© Renesas Electronics Corporation

REVISIONS			
DATE CREATED	REV	DESCRIPTION	AUTHOR
09/18/14	00	INITIAL RELEASE	J.HUA
4/5/18	01	CHANGE VFQFN to DFN	R.C
NOTE: REFER TO DCP FOR OFFICIAL RELEASE DATE			

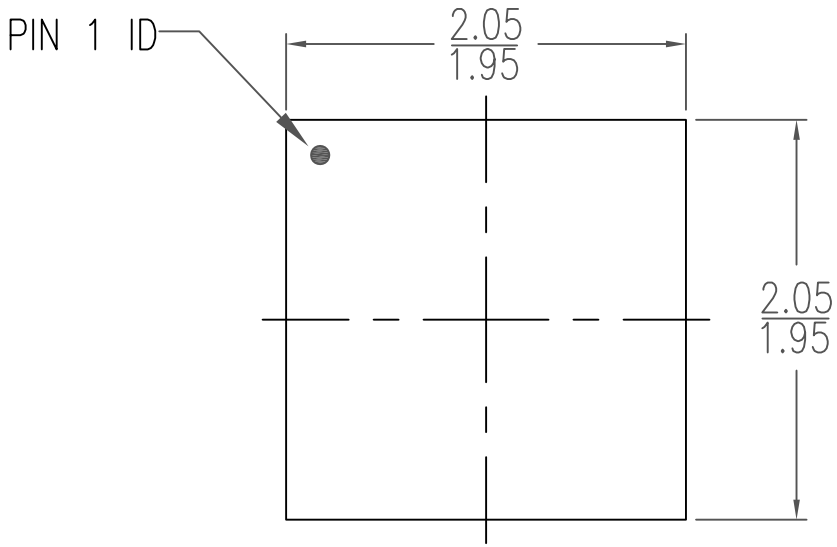

TOP VIEW

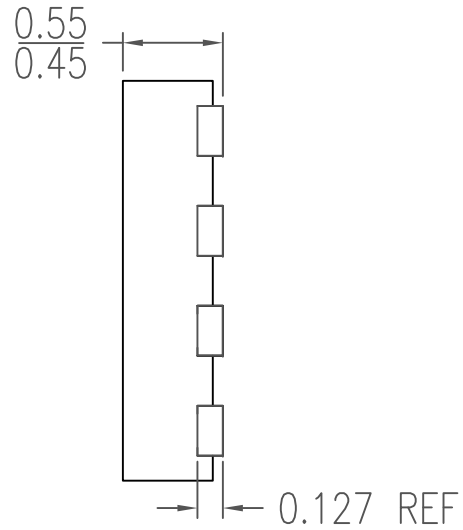

SIDE VIEW

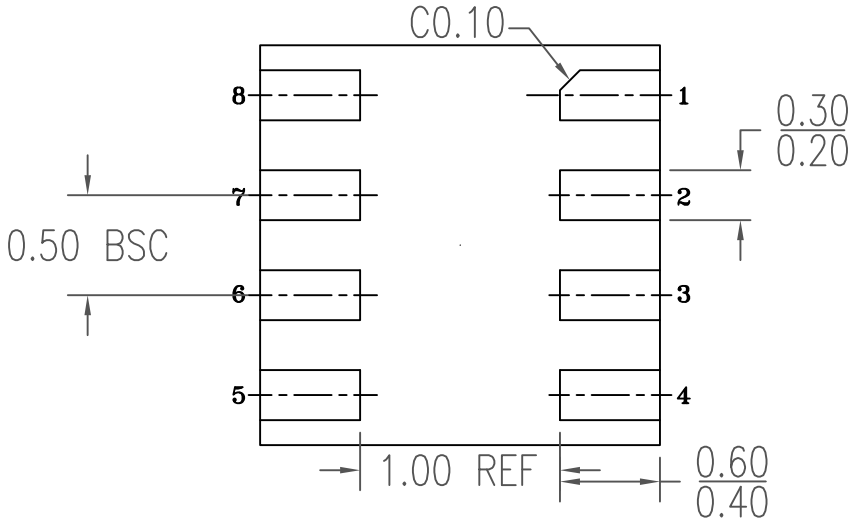

BOTTOM VIEW

NOTES:

1. ALL DIMENSIONING AND TOLERANCING CONFORM TO ANSI Y14.5M-1982
2. ALL DIMENSIONS ARE IN MILLIMETERS

TOLERANCES UNLESS SPECIFIED		
DECIMAL	ANGULAR	
XX±	±	
XXX±		
XXXX±		

IDT. www.IDT.com
6024 SILVER CREEK VALLEY ROAD
San Jose, CA 95138
PHONE: (408) 284-8200
FAX: (408) 492-8674

TITLE CMG8 Package Outline Drawing
2.0 x 2.0 x 0.5 mm Body
0.5mm Pitch DFN

SIZE	DRAWING No.	REV
C	PSC-4490	01

DO NOT SCALE DRAWING | SHEET 1 OF 2

REVISIONS			
DATE CREATED	REV	DESCRIPTION	AUTHOR
09/18/14	00	INITIAL RELEASE	J.HUA
4/5/18	01	CHANGE VFQFN to DFN	R.C
NOTE: REFER TO DCP FOR OFFICIAL RELEASE DATE			

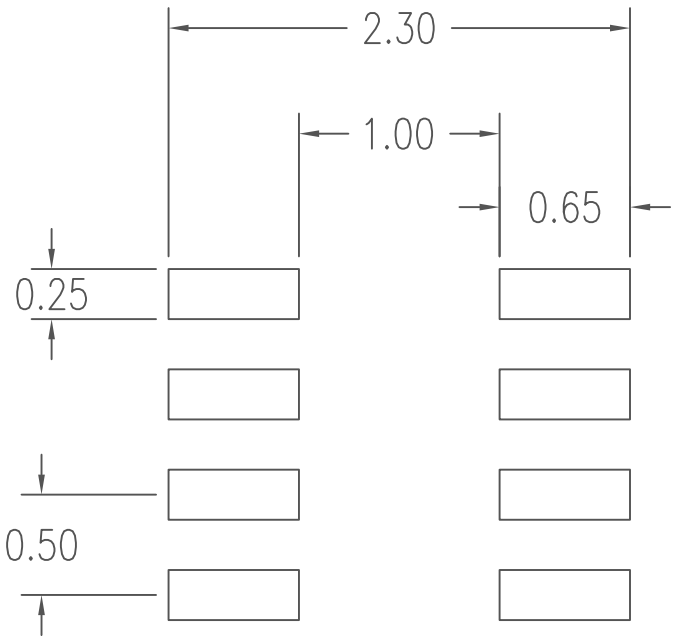

RECOMMENDED LAND PATTERN DIMENSION

NOTES:
1. ALL DIMENSION ARE IN MM. ANGLES IN DEGREES.
2. TOP DOWN VIEW. AS VIEWED.
3. LAND PATTERN RECOMMENDATION PER IPC-7351B GENERIC REQUIREMENT FOR MOUNT DESIGN AND LAND PATTERN.

TOLERANCES UNLESS SPECIFIED
DECIMAL XX± XXX± XXXX±
ANGULAR ±

IDT. www.IDT.com
6024 SILVER CREEK VALLEY ROAD
San Jose, CA 95138
PHONE: (408) 284-8200
FAX: (408) 492-8674

TITLE CMG8 Package Outline Drawing
2.0 x 2.0 x 0.5 mm Body
0.5mm Pitch DFN

SIZE	DRAWING No.	REV
C	PSC-4490	01

DO NOT SCALE DRAWING

REVISIONS			
DATE CREATED	REV	DESCRIPTION	AUTHOR
4/3/14	00	INITIAL RELEASE	JH
12/11/14	01	ADD PIN1 CHAMFER	JH
4/5/18	02	CHANGE QFN TO VFQFPN, RECALCULATE LAND PATTERN	RC
NOE: REFER TO DCP FOR OFFICIAL RELEASE DATE			

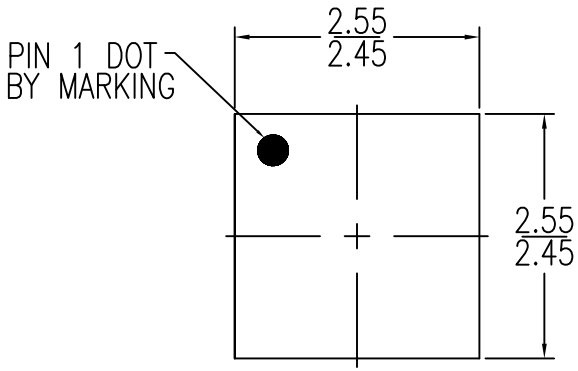

TOP VIEW

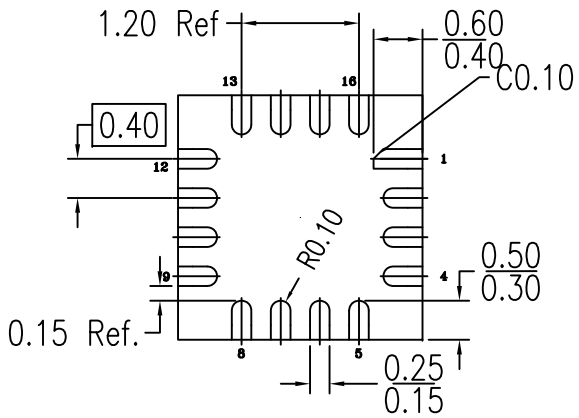

BOTTOM VIEW

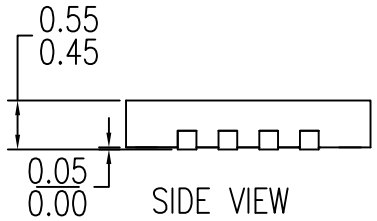

SIDE VIEW

NOTES:

1. ALL DIMENSIONING AND TOLERANCING CONFORM TO ANSI Y14.5M-1982
2. ALL DIMENSIONS ARE IN MILLIMETERS.

TOLERANCES UNLESS SPECIFIED DECIMAL X± XX± XXX± ANGULAR ±1°	IDT™ www.IDT.com	6024 Silver Creek Valley Road San Jose CA 95138 PHONE: (408) 284-8200 FAX: (408) 284-8591
DRAWN	TITLE CMG16 Package Outline Drawing 2.5 x 2.5 x 0.5 mm Body 0.40mm Pitch VFQFPN	
	SIZE C	DRAWING No. PSC-4478 / REV 02
	DO NOT SCALE DRAWING	SHEET 1 OF 2

REVISIONS			
DATE CREATED	REV	DESCRIPTION	AUTHOR
4/3/14	00	INITIAL RELEASE	JH
12/11/14	01	ADD PIN1 CHAMFER	JH
4/5/18	02	CHANGE QFN TO VFQFPN, RECALCULATE LAND PATTERN	RC
NOE: REFER TO DCP FOR OFFICIAL RELEASE DATE			

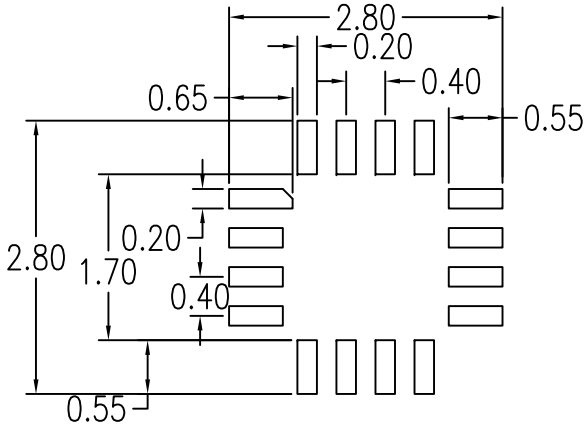

RECOMMENDED LAND PATTERN DIMENSION

NOTES:
1. ALL DIMENSIONS ARE IN MM. ANGLES IN DEGREES.
2. TOP DOWN VIEW AS VIEWED ON PCB.
3. LAND PATTERN RECOMMENDATION PER IPC-7351B GENERIC REQUIREMENT FOR SURFACE MOUNT DESIGN AND LAND PATTERN.

TOLERANCES UNLESS SPECIFIED
DECIMAL X± XX± XXX±
ANGULAR ±1°

DRAWN

IDT™
www.IDT.com
6024 Silver Creek Valley Road
San Jose CA 95138
PHONE: (408) 284-8200
FAX: (408) 284-8591

TITLE CMG16 Package Outline Drawing
2.5 x 2.5 x 0.5 mm Body
0.40mm Pitch VFQFPN

SIZE	DRAWING No.	REV
C	PSC-4478	02

DO NOT SCALE DRAWING

20-VFQFPN Package Outline Drawing

3.0 x 3.0 x 0.90 mm, 0.40mm Pitch, 1.65 x 1.65 mm Epad

NDG20P2, PSC-4179-02, Rev 01, Page 1

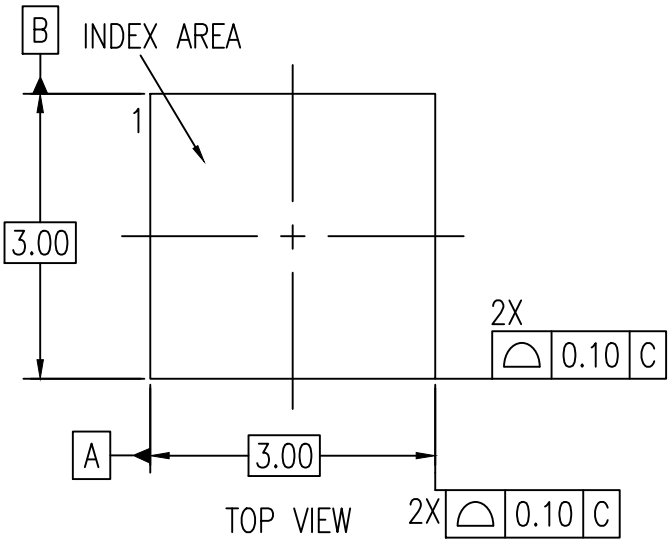

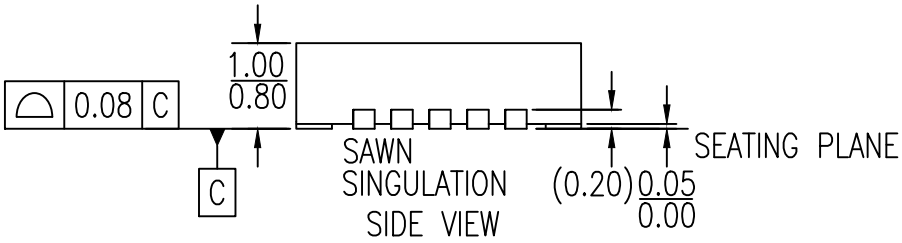

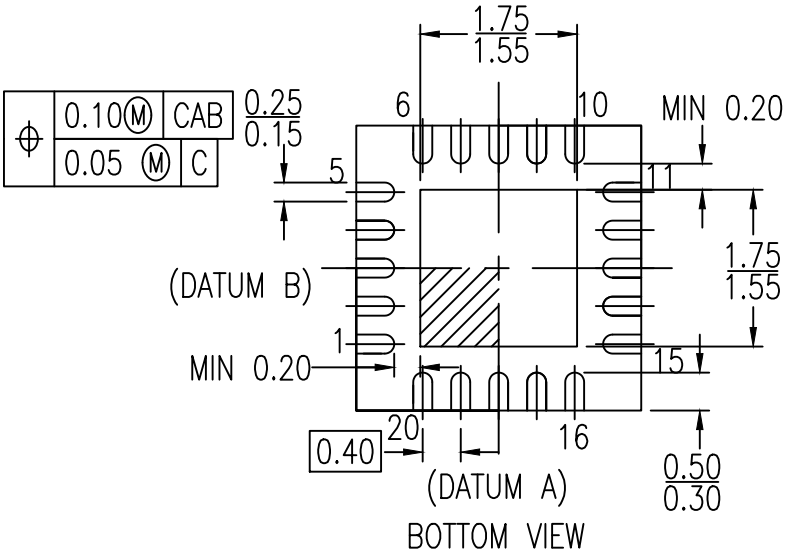

NOTE:

1. ALL DIMENSIONS ARE IN MM.
2. ALL DIMENSIONIONG AND TOLERANCING CONFORFM TOASME Y14.5-2009
3. PIN 1 LOCATION IDENTIFIER IS EITHER BY CHAMFER OR NOTCH

© Renesas Electronics Corporation

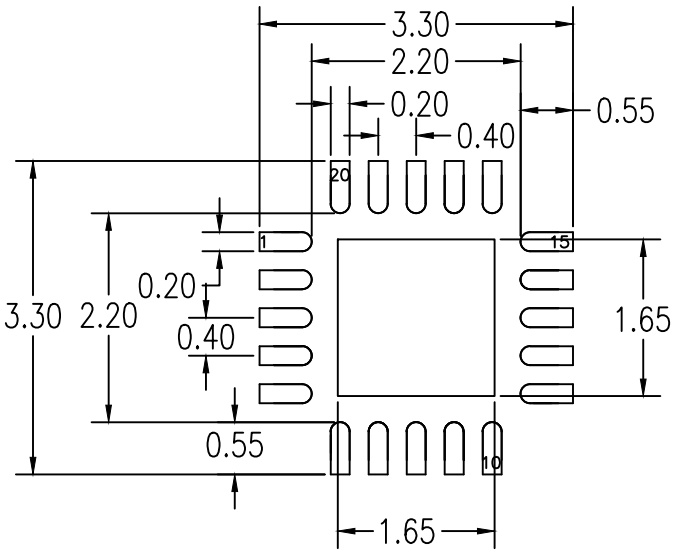

RECOMMENDED LAND PATTERN DIMENSION

NOTES:

1. ALL DIMENSIONS ARE IN MM. ANGLES IN DEGREES.
2. TOP DOWN VIEW. AS VIEWED ON PCB.
3. LAND PATTERN RECOMMENDATION PER IPC-7351B GENERIC REQUIREMENT FOR SURFACE MOUNT DESIGN AND LAND PATTERN.

Package Revision History		
Date Created	Rev No.	Description
Sept 13, 2018	Rev 01	Change QFN to VFQFPN
Mar 30, 2016	Rev 00	Initial Release

© Renesas Electronics Corporation

DFN-8, Package Outline Drawing

2.0 x 2.0 x 0.75 mm Body, 0.50mm Pitch

CMT8D1, PSC-4778-01, Rev 00, Page 1

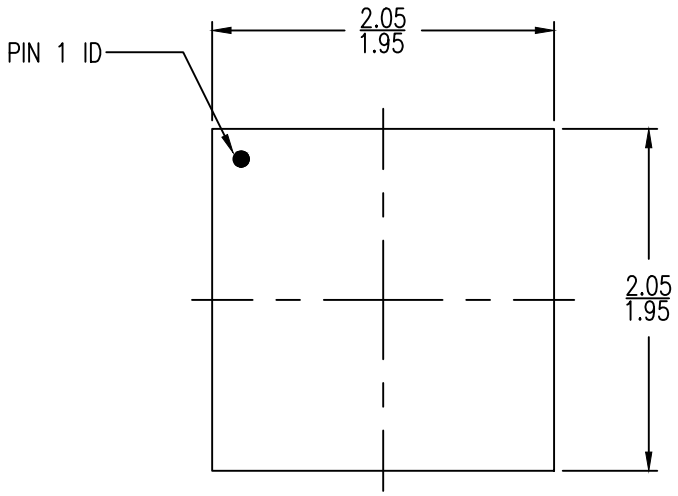

TOP VIEW

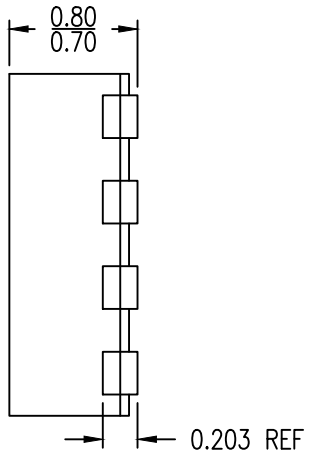

SIDE VIEW

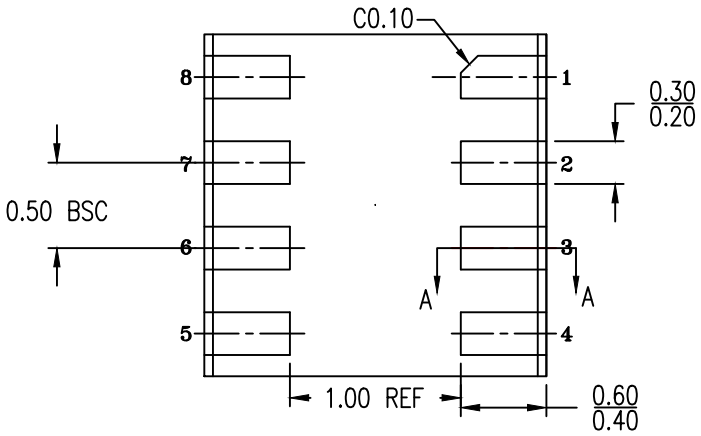

BOTTOM VIEW

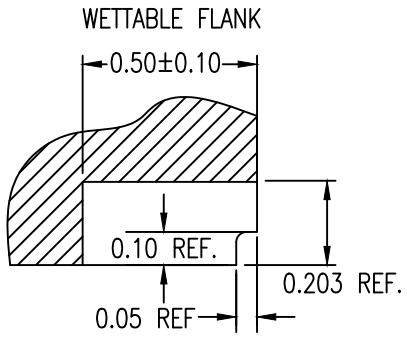

A–A CROSS SECTION

NOTES:

1. ALL DIMENSIONING AND TOLERANCING CONFORM TO ANSI Y14.5M–1982
2. ALL DIMENSIONS ARE IN MILLIMETERS

© Renesas Electronics Corporation

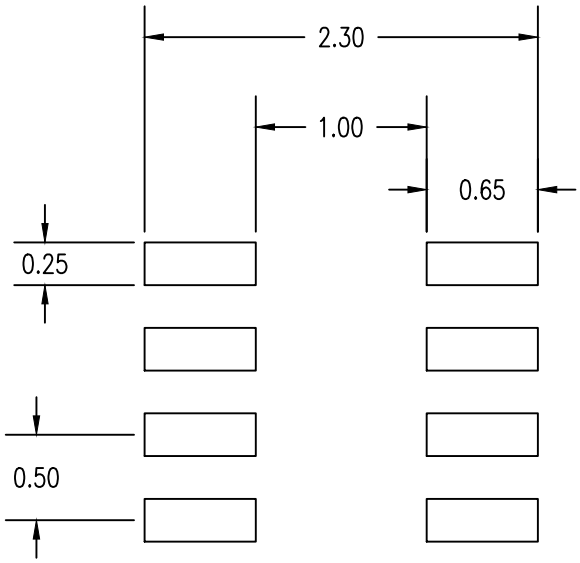

RECOMMENDED LAND PATTERN DIMENSION

NOTES:

1. ALL DIMENSION ARE IN MM. ANGLES IN DEGREES.
2. TOP DOWN VIEW. AS VIEWED.
3. LAND PATTERN RECOMMENDATION PER IPC-7351B GENERIC REQUIREMENT FOR MOUNT DESIGN AND LAND PATTERN.

Package Revision History		
Date Created	Rev No.	Description
Oct 23, 2018	Rev 00	Initial Release

© Renesas Electronics Corporation

IMPORTANT NOTICE AND DISCLAIMER

RENESAS ELECTRONICS CORPORATION AND ITS SUBSIDIARIES (“RENESAS”) PROVIDES TECHNICAL SPECIFICATIONS AND RELIABILITY DATA (INCLUDING DATASHEETS), DESIGN RESOURCES (INCLUDING REFERENCE DESIGNS), APPLICATION OR OTHER DESIGN ADVICE, WEB TOOLS, SAFETY INFORMATION, AND OTHER RESOURCES “AS IS” AND WITH ALL FAULTS, AND DISCLAIMS ALL WARRANTIES, EXPRESS OR IMPLIED, INCLUDING, WITHOUT LIMITATION, ANY IMPLIED WARRANTIES OF MERCHANTABILITY, FITNESS FOR A PARTICULAR PURPOSE, OR NON-INFRINGEMENT OF THIRD PARTY INTELLECTUAL PROPERTY RIGHTS.

These resources are intended for developers skilled in the art designing with Renesas products. You are solely responsible for (1) selecting the appropriate products for your application, (2) designing, validating, and testing your application, and (3) ensuring your application meets applicable standards, and any other safety, security, or other requirements. These resources are subject to change without notice. Renesas grants you permission to use these resources only for development of an application that uses Renesas products. Other reproduction or use of these resources is strictly prohibited. No license is granted to any other Renesas intellectual property or to any third party intellectual property. Renesas disclaims responsibility for, and you will fully indemnify Renesas and its representatives against, any claims, damages, costs, losses, or liabilities arising out of your use of these resources. Renesas' products are provided only subject to Renesas' Terms and Conditions of Sale or other applicable terms agreed to in writing. No use of any Renesas resources expands or otherwise alters any applicable warranties or warranty disclaimers for these products.

(Rev.1.0 Mar 2020)

Corporate Headquarters

TOYOSU FORESIA, 3-2-24 Toyosu,
Koto-ku, Tokyo 135-0061, Japan
www.renesas.com

Contact Information

For further information on a product, technology, the most up-to-date version of a document, or your nearest sales office, please visit:
www.renesas.com/contact/

Trademarks

Renesas and the Renesas logo are trademarks of Renesas Electronics Corporation. All trademarks and registered trademarks are the property of their respective owners.

© 2020 Renesas Electronics Corporation. All rights reserved.